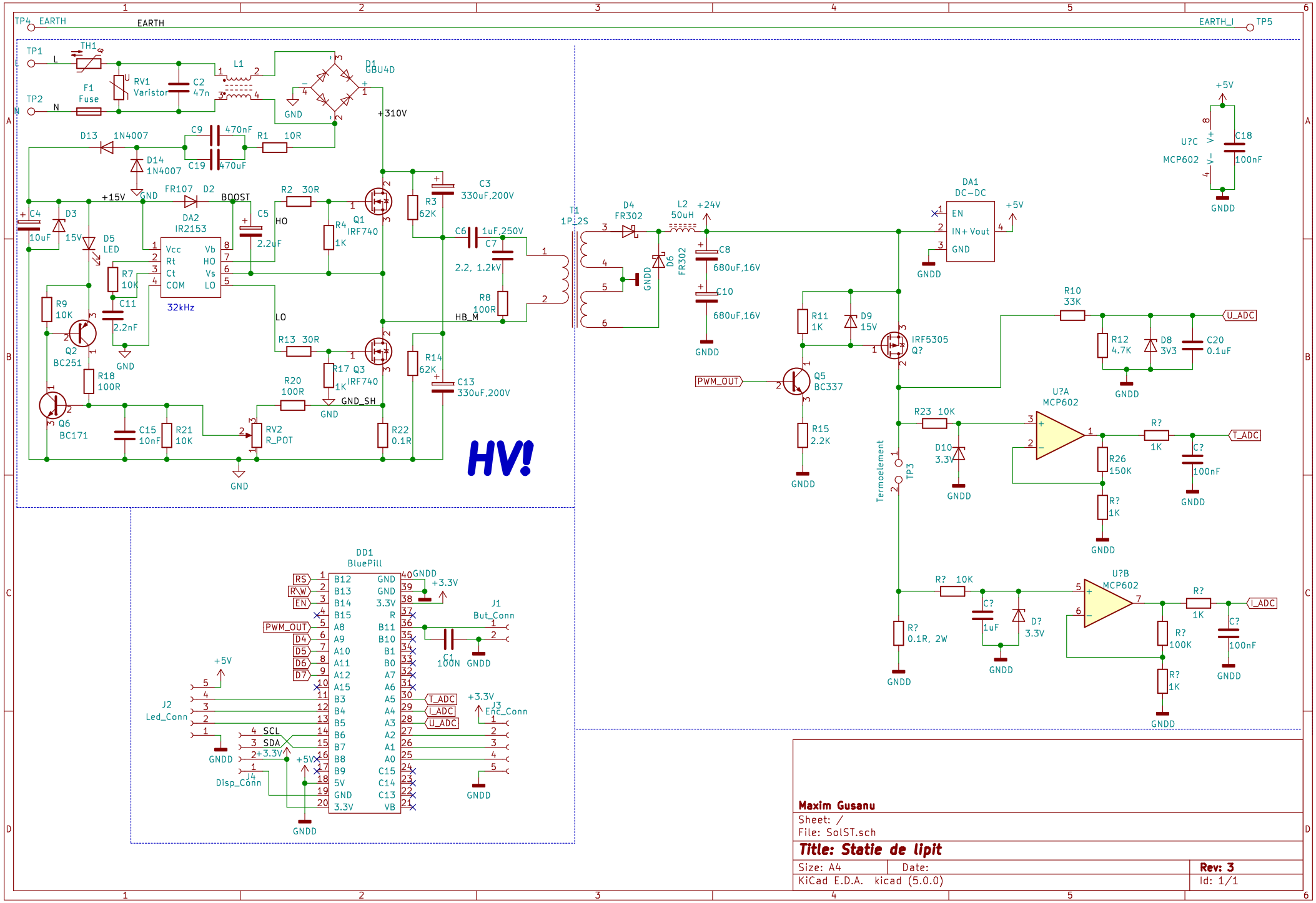

Maxim Gusanu

Sheet: /

File: SolST.sch

Title: Statie de lipit

Size: A4	Date:	**Rev: 3**
KiCad E.D.A. kicad (5.0.0)		Id: 1/1