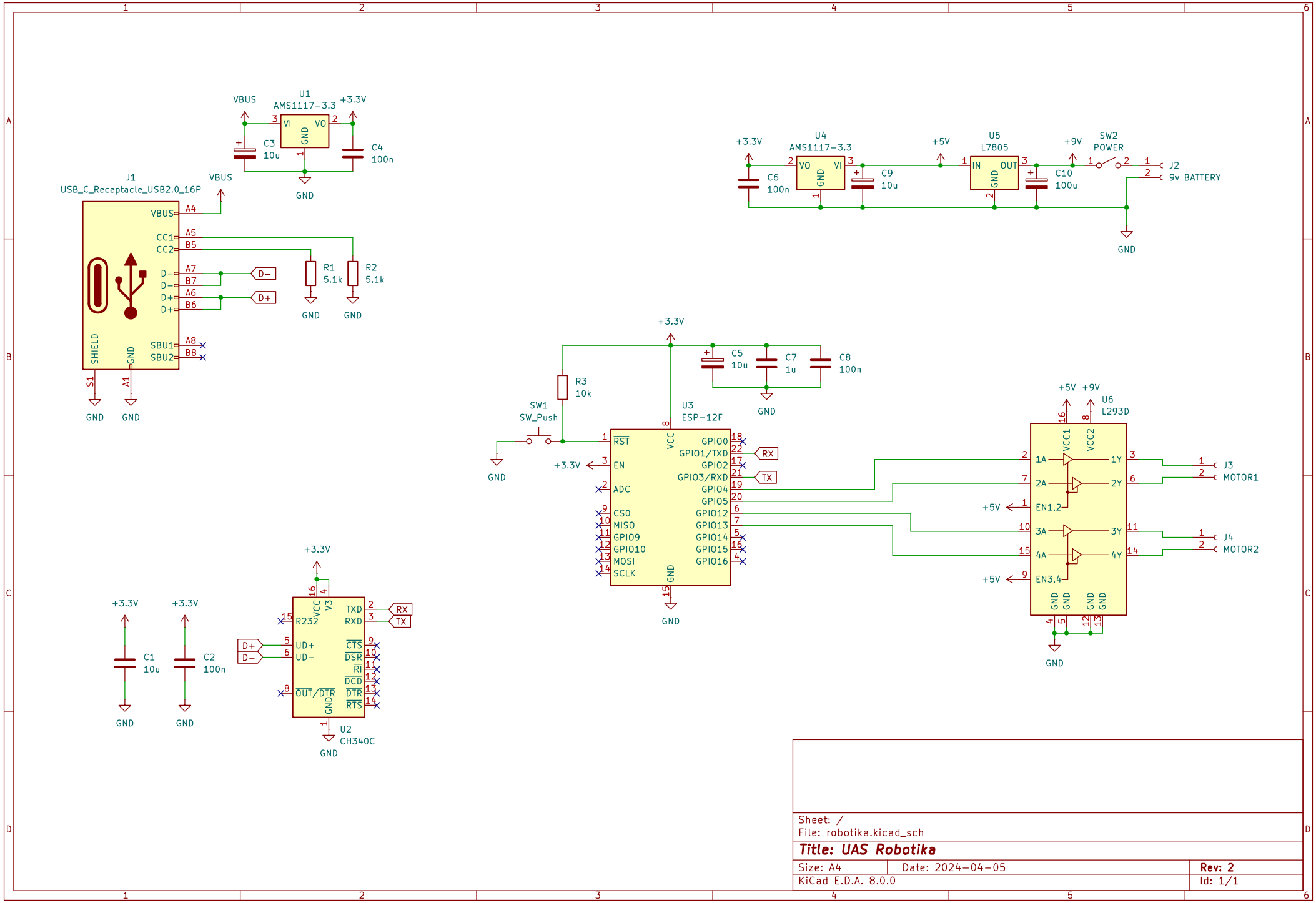

Sheet: /
File: robotika.kicad_sch

Title: UAS Robotika

Size: A4	Date: 2024-04-05	**Rev: 2**
KiCad E.D.A. 8.0.0		Id: 1/1