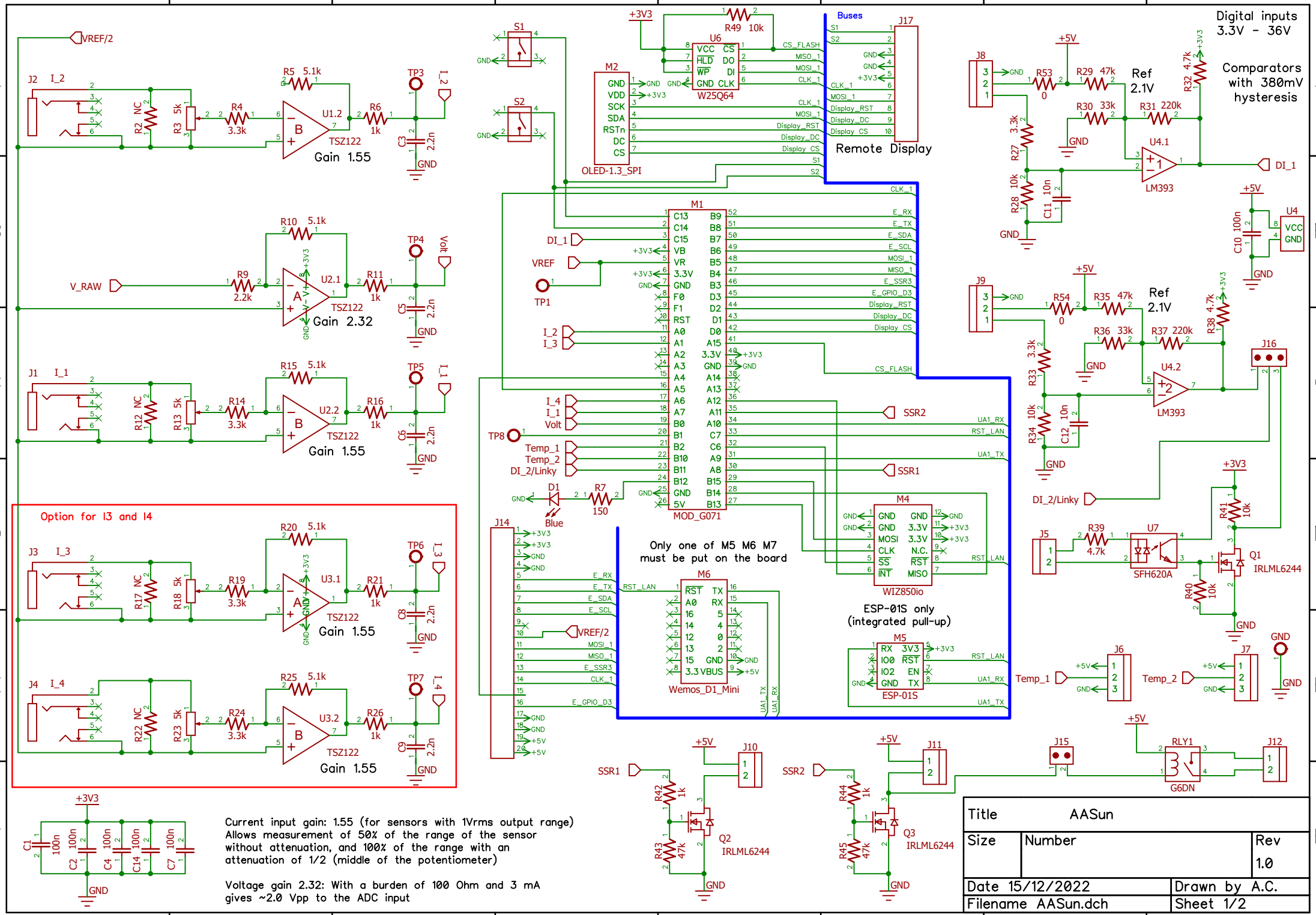
Digital inputs
3.3V - 36V
Comparators
with 380mV
hysteresis
Ref
2.1V
Gain 1.55
Gain 2.32
TSZ122
LM393
Remote Display
OLED-1.3_SPI
W25Q64
MOD_G071
WIZ850io
Wemos_D1_Mini
ESP-01S
ESP-01S only
(integrated pull-up)
Only one of M5 M6 M7
must be put on the board
Option for I3 and I4
SFH620A
IRLML6244
G6DN
Current input gain: 1.55 (for sensors with 1Vrms output range)
Allows measurement of 50% of the range of the sensor
without attenuation, and 100% of the range with an
attenuation of 1/2 (middle of the potentiometer)
Voltage gain 2.32: With a burden of 100 Ohm and 3 mA
gives ~2.0 Vpp to the ADC input
Title AASun
Size
Number
Rev 1.0
Date 15/12/2022
Drawn by A.C.
Filename AASun.dch
Sheet 1/2

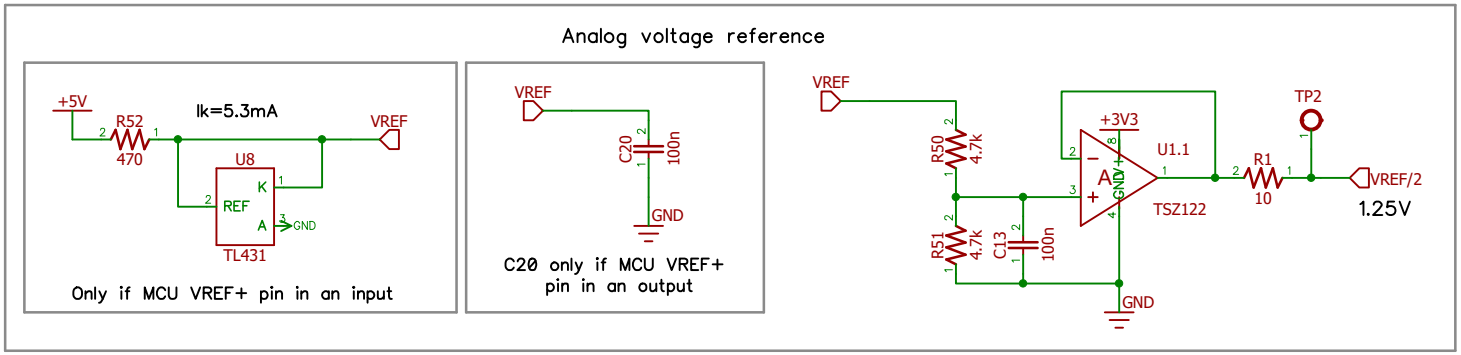

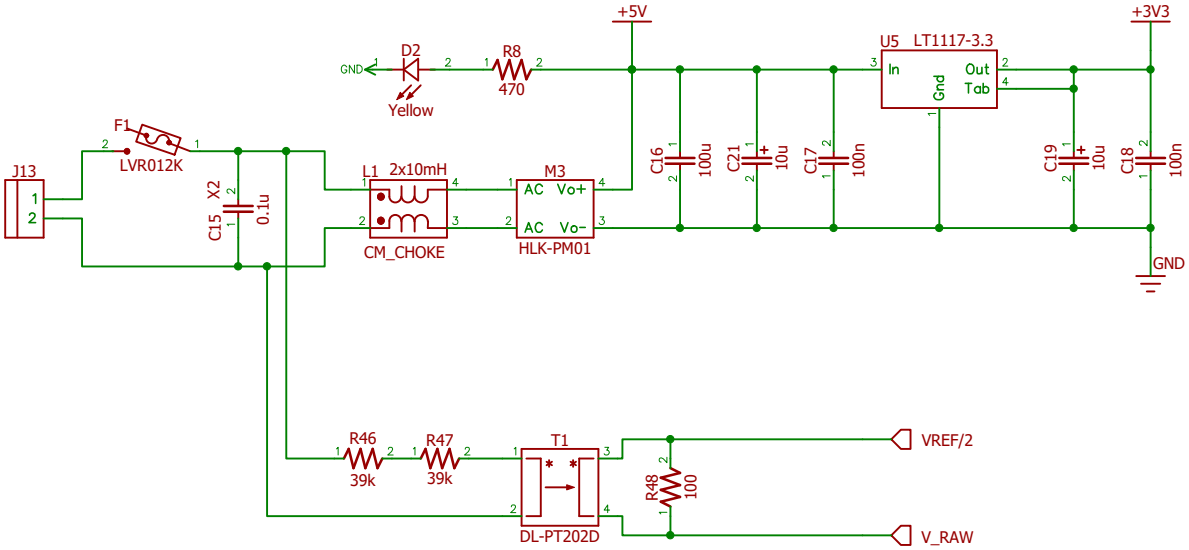

2x39k = 78k Ohms.
78k on 235V
=> 3.0 mA
=> 0.7W

=> Use 2010 SMT resistors: 2x150V, 2x0.5W

Title	AASun: PV diverter	
Size	Number	Rev 1.0
Date 15/12/2022		Drawn by A.C.
Filename AASun.dch		Sheet 2/2