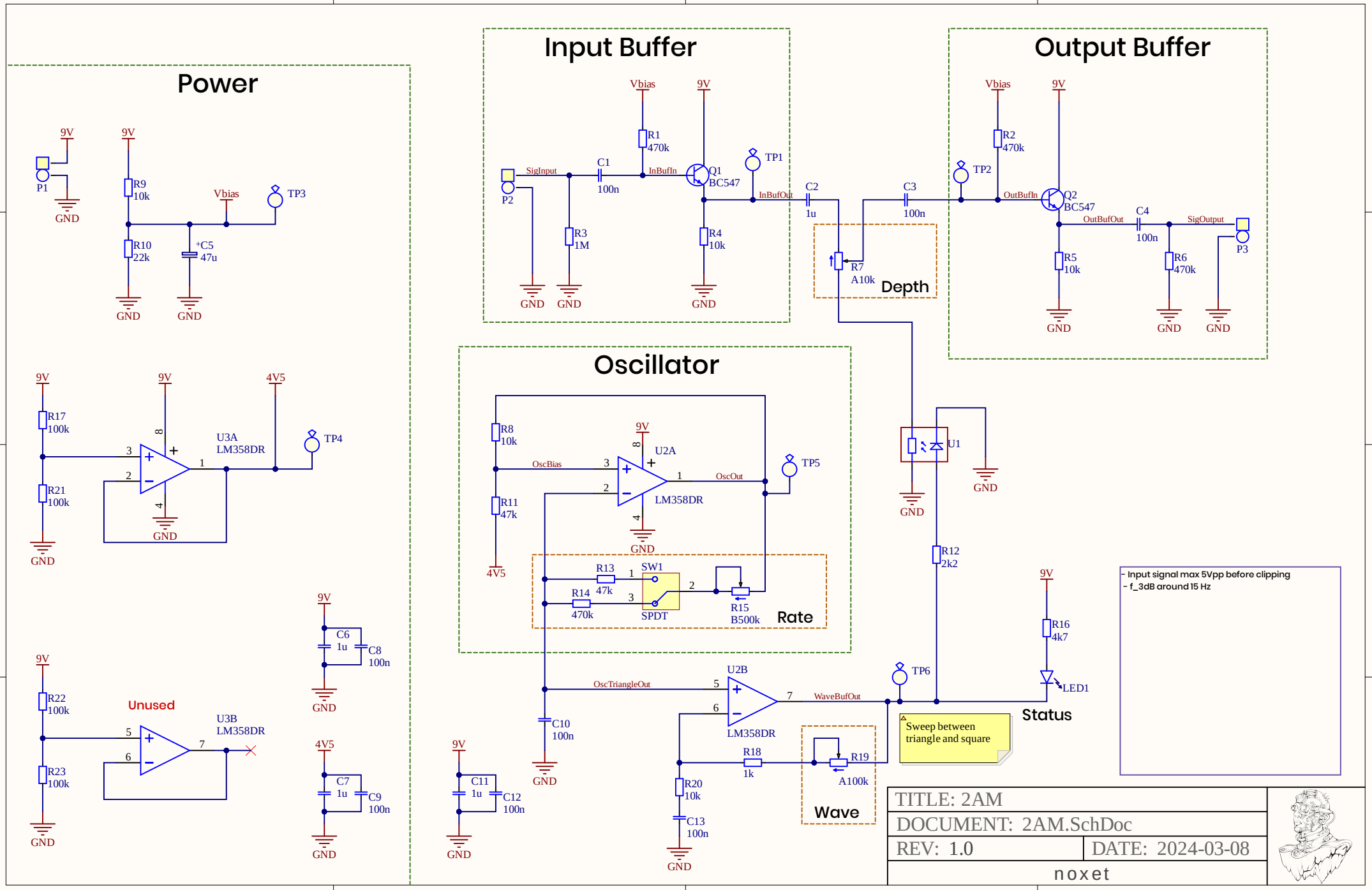
Power
9V
P1
GND
R9
10k
Vbias
TP3
R10
22k
C5
47u
R17
100k
R21
100k
U3A
LM358DR
4V5
TP4
Unused
U3B
LM358DR
R22
100k
R23
100k
C6
1u
C8
100n
C7
1u
C9
100n
Input Buffer
R1
470k
C1
100n
SigInput
InBufIn
Q1
BC547
TP1
InBufOut
R3
1M
R4
10k
P2
C2
1u
C3
100n
R7
A10k
Depth
Output Buffer
R2
470k
TP2
OutBufIn
Q2
BC547
OutBufOut
C4
100n
SigOutput
R5
10k
R6
470k
P3
Oscillator
R8
10k
R11
47k
OscBias
U2A
LM358DR
OscOut
TP5
R13
47k
R14
470k
SW1
SPDT
R15
B500k
Rate
C10
100n
OscTriangleOut
U2B
LM358DR
WaveBufOut
TP6
R18
1k
R19
A100k
Wave
R20
10k
C13
100n
C11
1u
C12
100n
U1
R12
2k2
R16
4k7
LED1
Status
Sweep between triangle and square
- Input signal max 5Vpp before clipping
- f_3dB around 15 Hz
TITLE: 2AM
DOCUMENT: 2AM.SchDoc
REV: 1.0
DATE: 2024-03-08
noxet