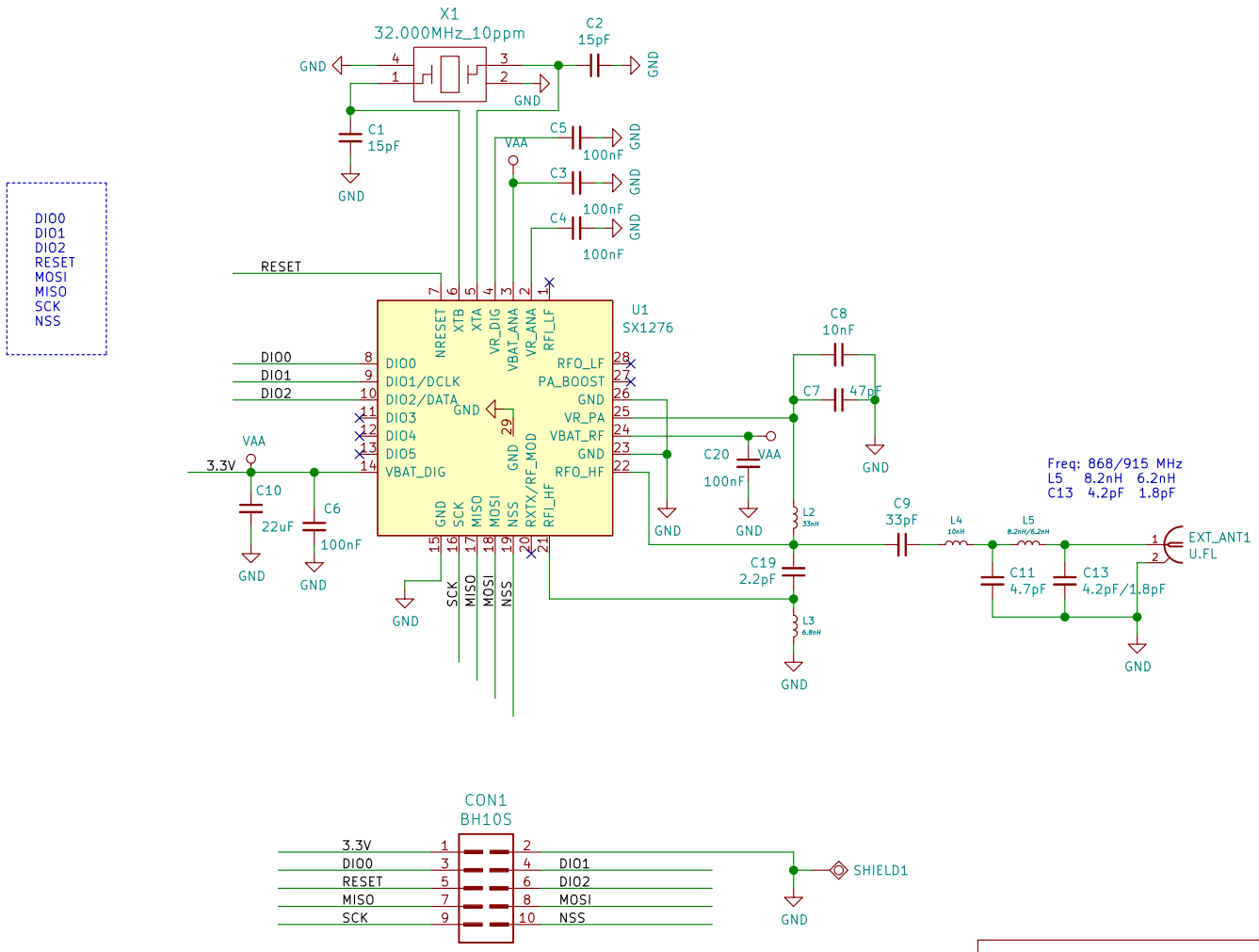

Olimex Ltd.

Sheet: /

File: MOD-LoRa_RevB.sch

Title: MOD-LoRa

Size: A4	Date:	Rev: B
KiCad E.D.A. kicad 5.1.6-c6e7f7d87ubuntu18.04.1		Id: 1/1