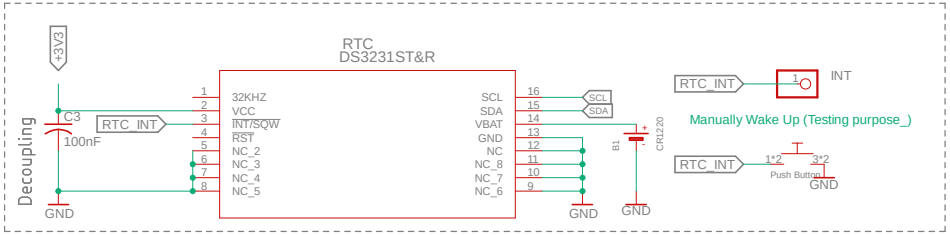
RTC
DS3231ST&R
+3V3
Decoupling
C3
100nF
RTC_INT
32KHZ
VCC
INT/SQW
RST
NC_2
NC_3
NC_4
NC_5
SCL
SDA
VBAT
GND
NC
NC_8
NC_7
NC_6
B1
CR1220
INT
Manually Wake Up (Testing purpose_)
Push Button
GND

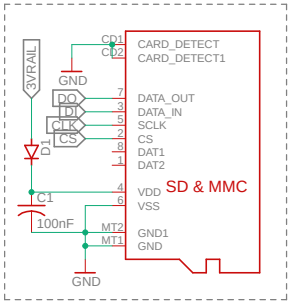
3VRAIL
CD1
CD2
CARD_DETECT
CARD_DETECT1
DO
DI
CLK
CS
DATA_OUT
DATA_IN
SCLK
CS
DAT1
DAT2
D1
VDD
VSS
SD & MMC
C1
100nF
MT2
MT1
GND1
GND
GND

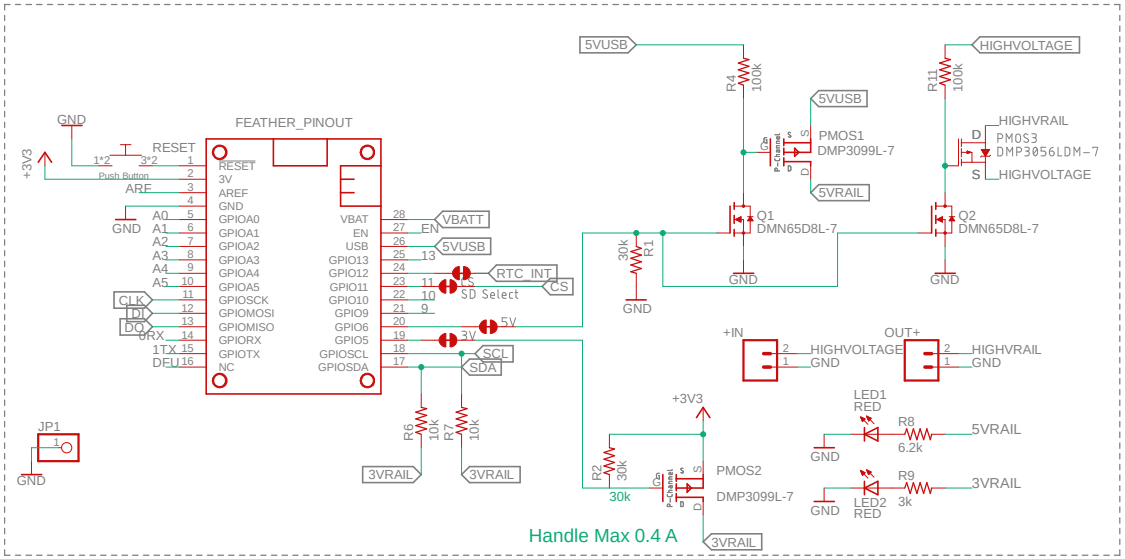
FEATHER_PINOUT
+3V3
GND
RESET
Push Button
ARF
A0
A1
A2
A3
A4
A5
CLK
DI
DO
0RX
1TX
DFU
VBATT
EN
5VUSB
RTC_INT
CS
SD Select
5V
3V
SCL
SDA
JP1
R6
10k
R7
10k
3VRAIL
5VUSB
R4
100k
PMOS1
DMP3099L-7
5VRAIL
Q1
DMN65D8L-7
30k
R1
HIGHVOLTAGE
R11
100k
HIGHVRAIL
PMOS3
DMP3056LDM-7
Q2
DMN65D8L-7
+IN
OUT+
LED1
RED
R8
6.2k
R9
3k
LED2
RED
R2
30k
PMOS2
DMP3099L-7
Handle Max 0.4 A

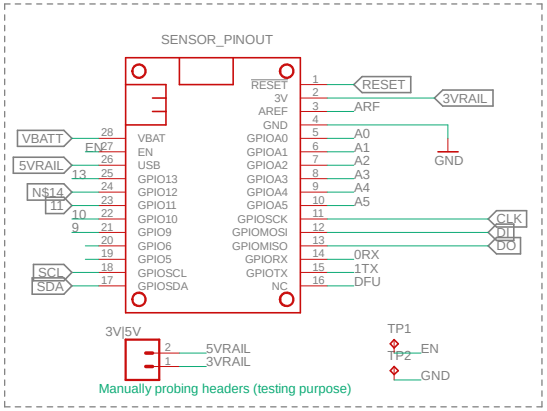
SENSOR_PINOUT
RESET
3V
AREF
GND
GPIOA0
GPIOA1
GPIOA2
GPIOA3
GPIOA4
GPIOA5
GPIOSCK
GPIOMOSI
GPIOMISO
GPIORX
GPIOTX
NC
VBATT
EN
USB
GPIO13
GPIO12
GPIO11
GPIO10
GPIO9
GPIO6
GPIO5
GPIOSCL
GPIOSDA
3VRAIL
ARF
A0
A1
A2
A3
A4
A5
CLK
DI
DO
0RX
1TX
DFU
5VRAIL
N$14
SCL
SDA
3V|5V
TP1
TP2
Manually probing headers (testing purpose)