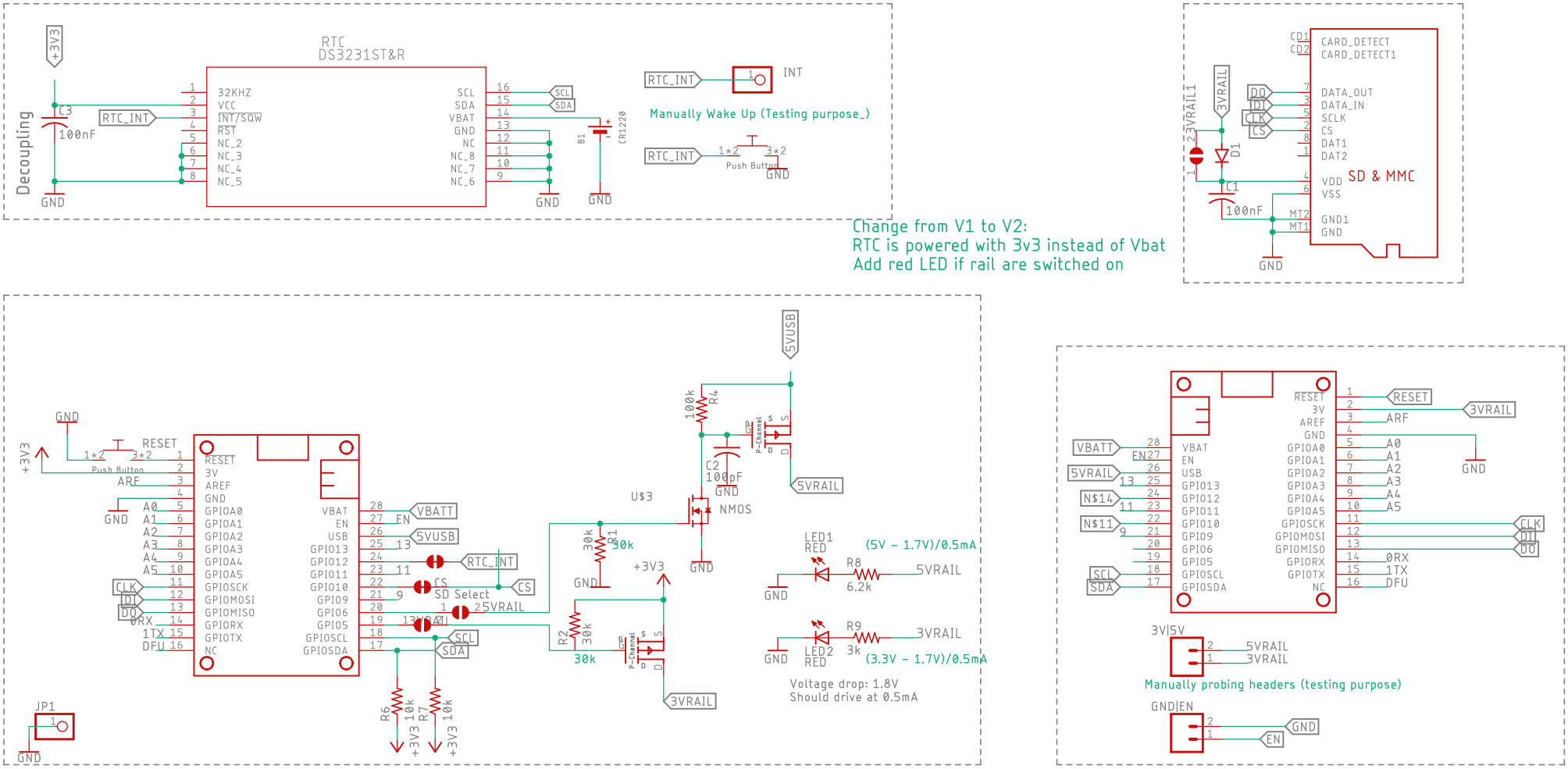
RTC
DS3231ST&R
Decoupling
C3
100nF
RTC_INT
32KHZ
VCC
INT/SQW
RST
NC_2
NC_3
NC_4
NC_5
SCL
SDA
VBAT
GND
NC
NC_8
NC_7
NC_6
B1
CR1220
INT
Manually Wake Up (Testing purpose_)
Push Button
Change from V1 to V2:
RTC is powered with 3v3 instead of Vbat
Add red LED if rail are switched on
CARD_DETECT
CARD_DETECT1
DATA_OUT
DATA_IN
SCLK
CS
DAT1
DAT2
VDD
VSS
GND1
SD & MMC
3VRAIL1
D1
C1
100nF
RESET
ARF
A0
A1
A2
A3
A4
A5
CLK
DI
DO
0RX
1TX
DFU
VBATT
EN
USB
GPIO13
GPIO12
GPIO11
GPIO10
GPIO9
GPIO6
GPIO5
GPIOSCL
GPIOSDA
5VUSB
RTC_INT
CS
SD Select
25VRAIL
3VRAIL
R6
R7
10k
JP1
U$3
R4
100k
C2
100pF
NMOS
5VRAIL
R1
30k
R2
30k
LED1
RED
R8
6.2k
(5V – 1.7V)/0.5mA
LED2
RED
R9
3k
(3.3V – 1.7V)/0.5mA
Voltage drop: 1.8V
Should drive at 0.5mA
3V|5V
Manually probing headers (testing purpose)
GND|EN