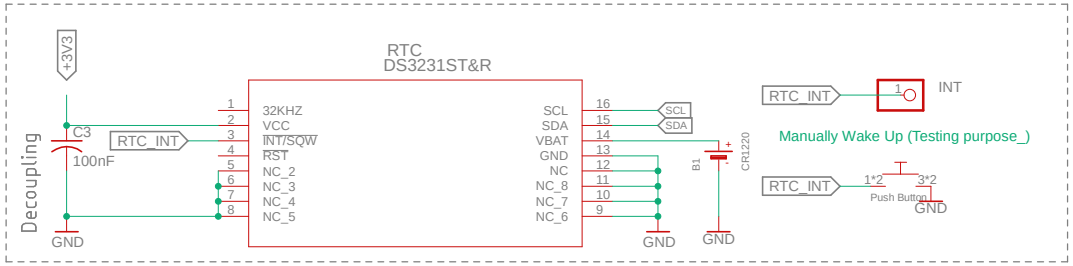
RTC
DS3231ST&R
+3V3
Decoupling
C3
100nF
RTC_INT
32KHZ
VCC
INT/SQW
RST
NC_2
NC_3
NC_4
NC_5
SCL
SDA
VBAT
GND
NC
NC_8
NC_7
NC_6
B1
CR1220
INT
Manually Wake Up (Testing purpose_)
Push Button
GND

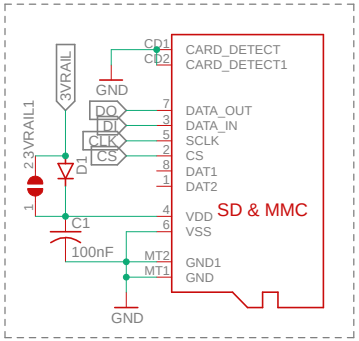
3VRAIL
3VRAIL1
CD1
CD2
CARD_DETECT
CARD_DETECT1
DO
DI
CLK
CS
DATA_OUT
DATA_IN
SCLK
CS
DAT1
DAT2
VDD
VSS
GND1
GND
SD & MMC
D1
C1
100nF
MT2
MT1
GND

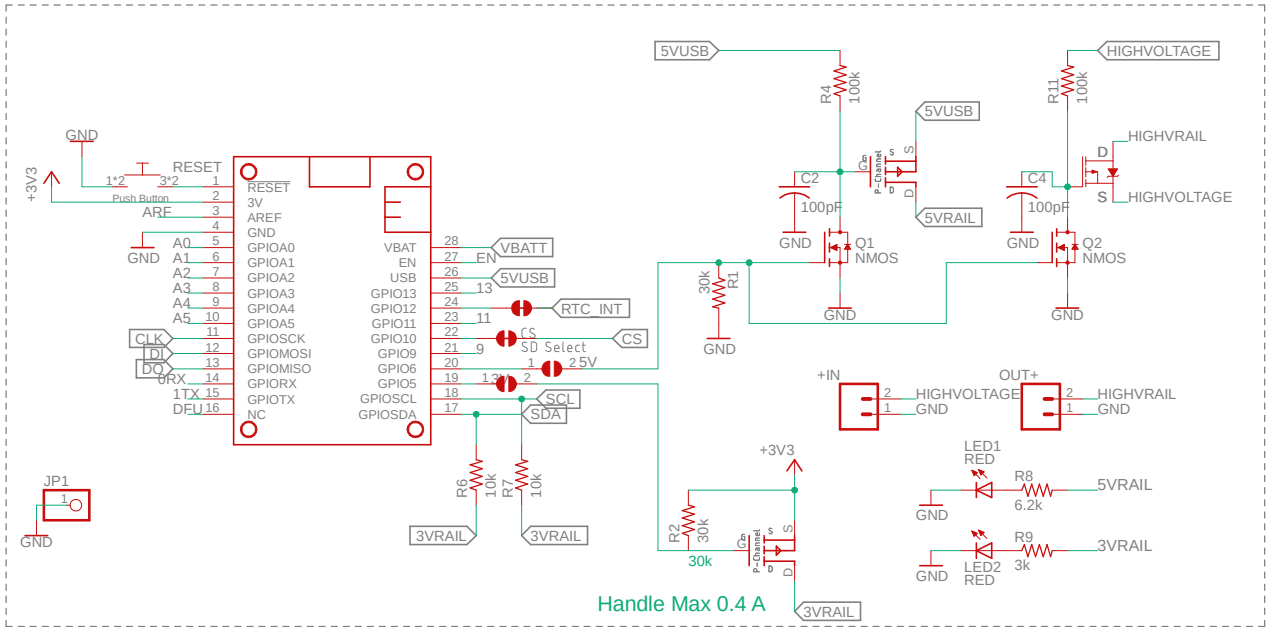
RESET
3V
AREF
GND
GPIOA0
GPIOA1
GPIOA2
GPIOA3
GPIOA4
GPIOA5
GPIOSCK
GPIOMOSI
GPIOMISO
GPIORX
GPIOTX
NC
VBAT
EN
USB
GPIO13
GPIO12
GPIO11
GPIO10
GPIO9
GPIO6
GPIO5
GPIOSCL
GPIOSDA
VBATT
5VUSB
RTC_INT
CS
SD Select
2.5V
SCL
SDA
CLK
DI
DO
0RX
1TX
DFU
JP1
R6 10k
R7 10k
3VRAIL
R4 100k
C2 100pF
Q1 NMOS
R1 30k
R2 30k
P-Channel
R11 100k
C4 100pF
Q2 NMOS
HIGHVOLTAGE
HIGHVRAIL
+IN
OUT+
LED1 RED
R8 6.2k
LED2 RED
R9 3k
Handle Max 0.4 A

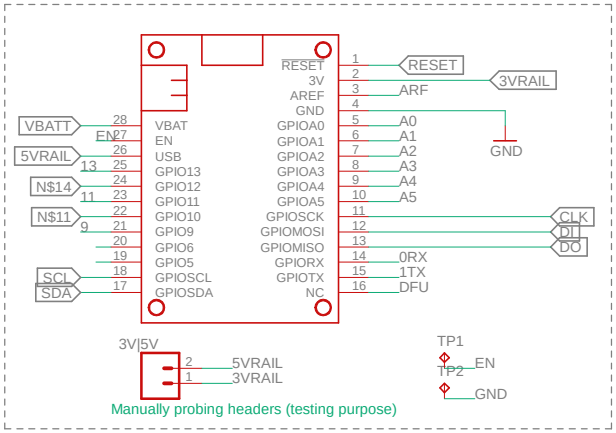
VBATT
5VRAIL
N$14
N$11
SCL
SDA
VBAT
EN
USB
GPIO13
GPIO12
GPIO11
GPIO10
GPIO9
GPIO6
GPIO5
GPIOSCL
GPIOSDA
RESET
3V
AREF
GND
GPIOA0
GPIOA1
GPIOA2
GPIOA3
GPIOA4
GPIOA5
GPIOSCK
GPIOMOSI
GPIOMISO
GPIORX
GPIOTX
NC
ARF
A0
A1
A2
A3
A4
A5
CLK
DI
DO
0RX
1TX
DFU
3V|5V
TP1
TP2
EN
Manually probing headers (testing purpose)