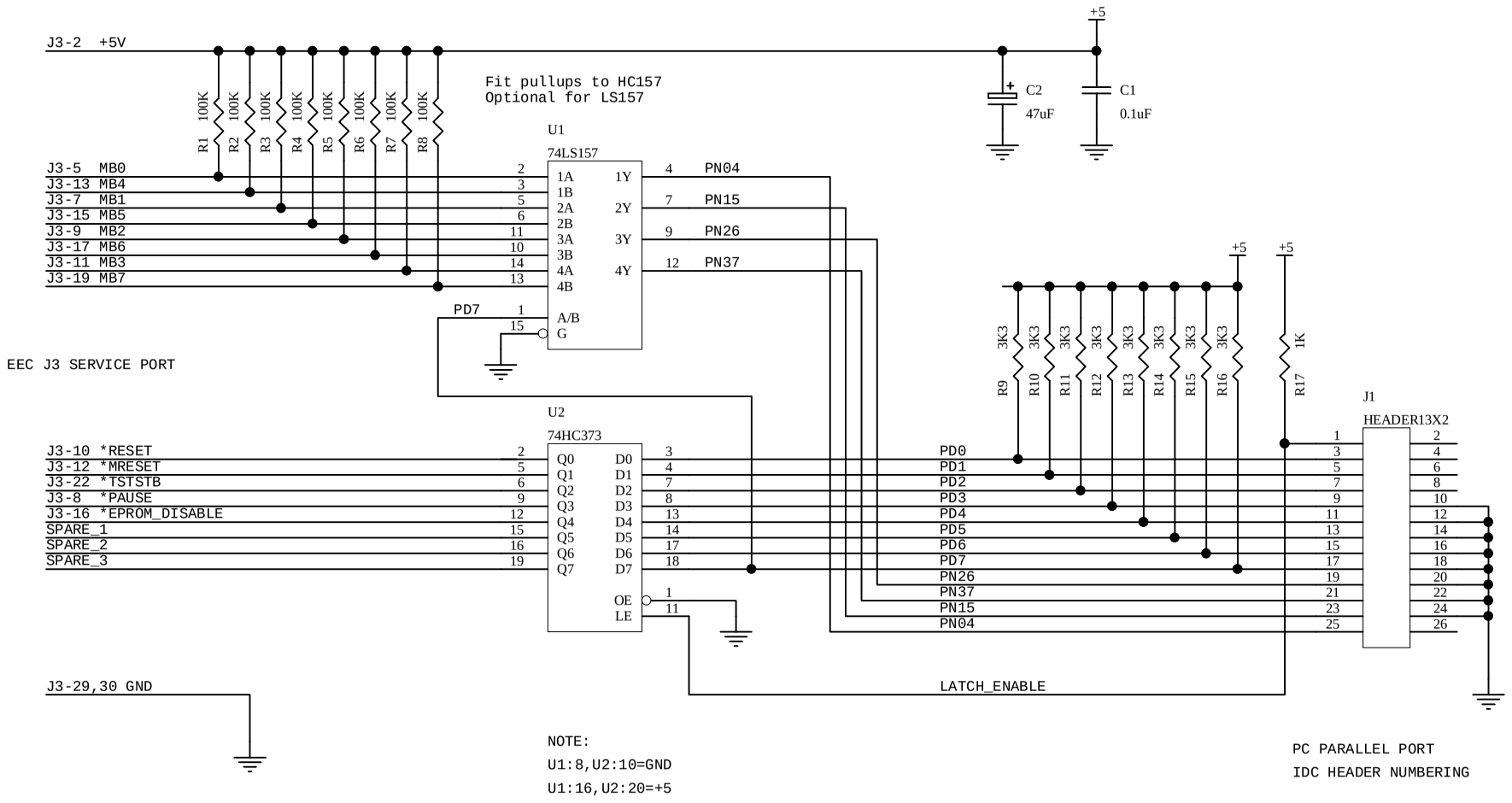

Title	EECSUCKA EEC-IV ROMDUMPER		
Size A4	Number		Revision 2.00
Date: 7-Nov-1998		Sheet 1 of 1	
File: G:\EECSUCKA\PCB\200\EECSK200.S01		Drawn By: AJM	