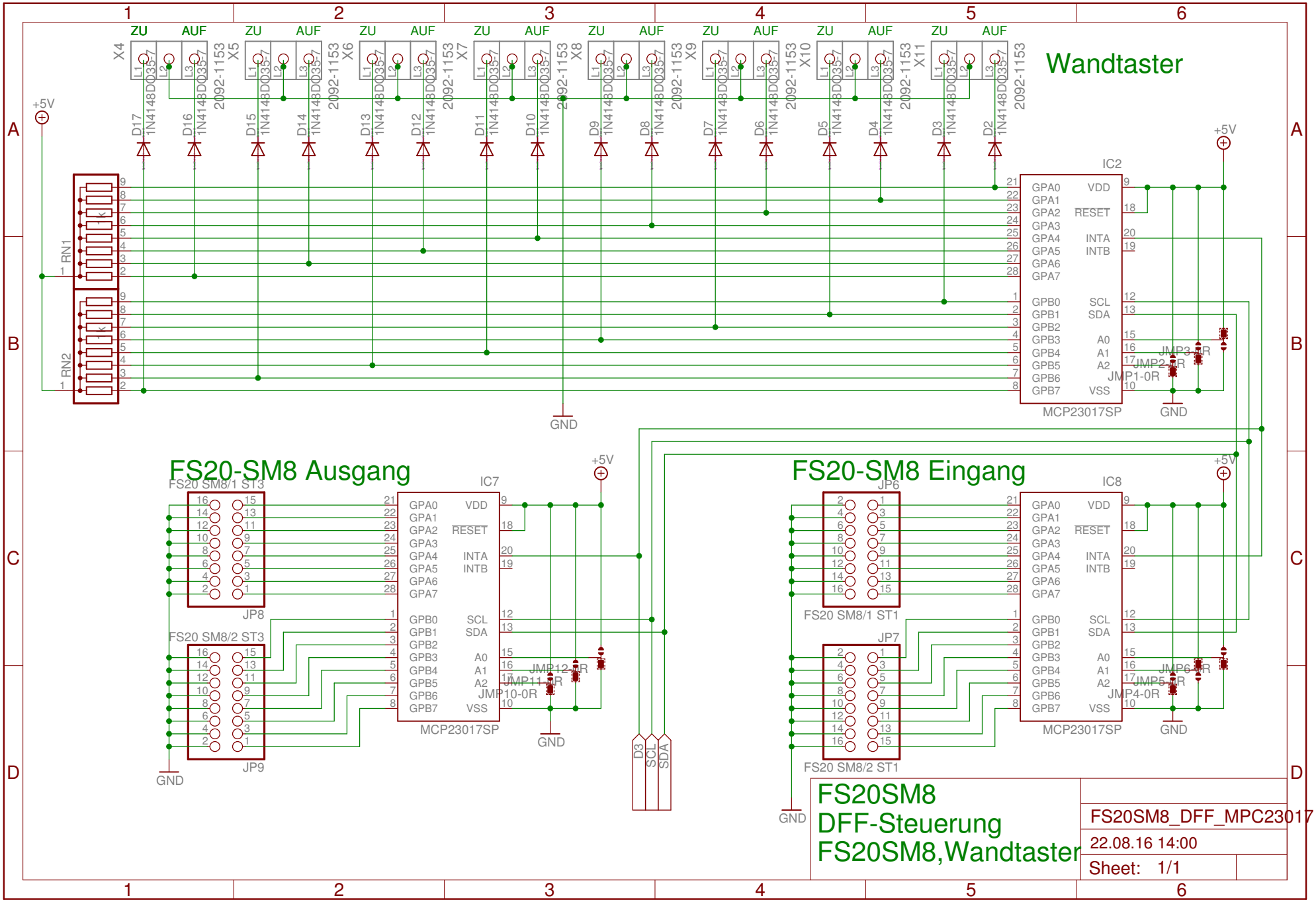
Wandtaster
ZU
AUF
X4
X5
X6
X7
X8
X9
X10
X11
2092-1153
1N4148
D17
D16
D15
D14
D13
D12
D11
D10
D9
D8
D7
D6
D5
D4
D3
D2
+5V
RN1
RN2
1k
IC2
GPA0
GPA1
GPA2
GPA3
GPA4
GPA5
GPA6
GPA7
VDD
RESET
INTA
INTB
GPB0
GPB1
GPB2
GPB3
GPB4
GPB5
GPB6
GPB7
SCL
SDA
A0
A1
A2
VSS
MCP23017SP
JMP3-0R
JMP2-0R
JMP1-0R
GND
FS20-SM8 Ausgang
FS20 SM8/1 ST3
JP8
FS20 SM8/2 ST3
JP9
IC7
JMP12-0R
JMP11-0R
JMP10-0R
D3
SCL
SDA
FS20-SM8 Eingang
JP6
FS20 SM8/1 ST1
JP7
FS20 SM8/2 ST1
IC8
JMP6-0R
JMP5-0R
JMP4-0R
FS20SM8
DFF-Steuerung
FS20SM8,Wandtaster
FS20SM8_DFF_MPC23017
22.08.16 14:00
Sheet: 1/1

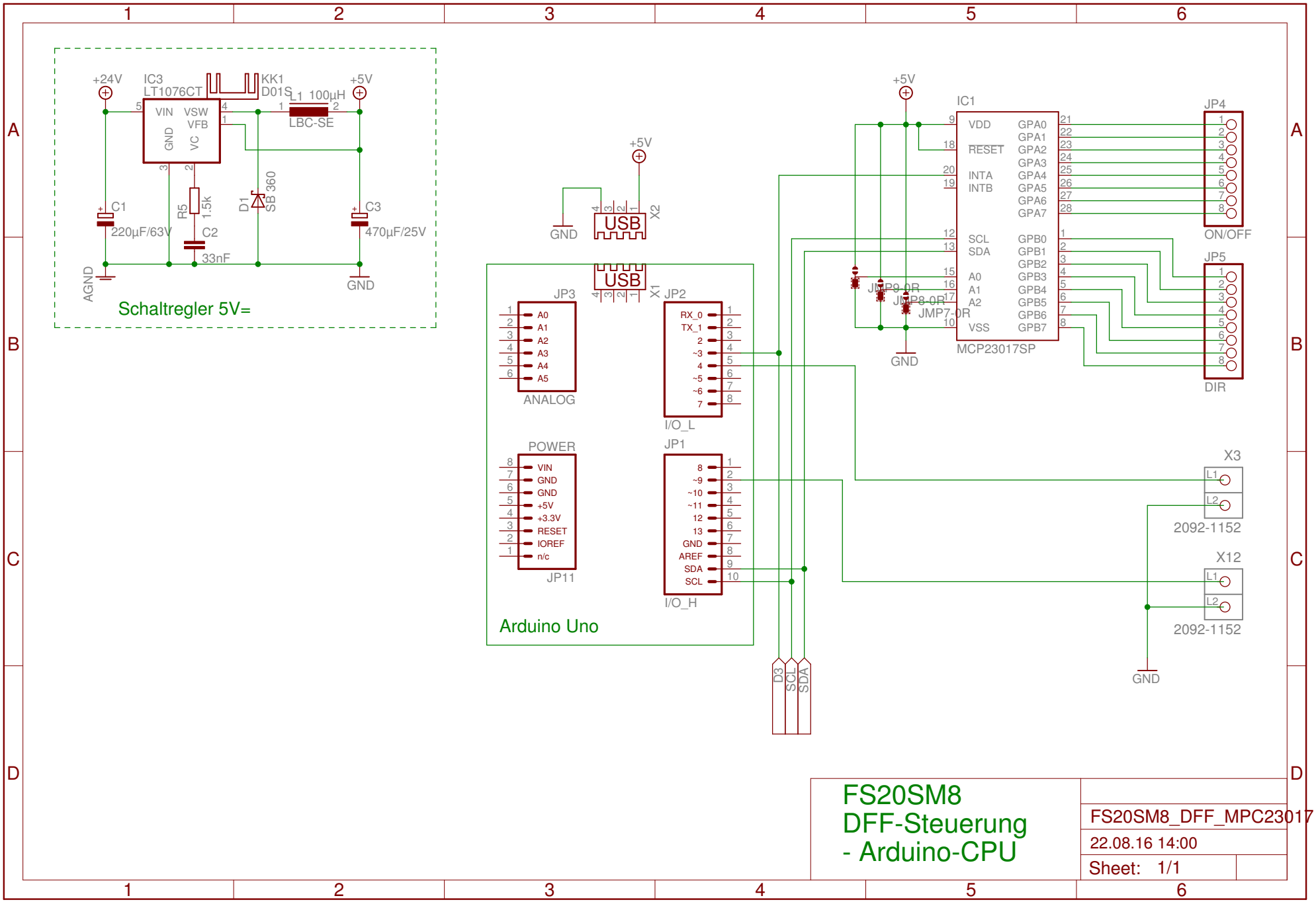
Schaltregler 5V=
+24V
IC3
LT1076CT
KK1
D01S
L1 100µH
LBC-SE
+5V
VIN
VSW
VFB
GND
VC
C1
220µF/63V
R5
1.5k
C2
33nF
D1
SB 360
C3
470µF/25V
AGND
GND
USB
X2
X1
JP3
ANALOG
A0
A1
A2
A3
A4
A5
JP2
I/O_L
RX_0
TX_1
~3
~5
~6
POWER
JP11
VIN
GND
+5V
+3.3V
RESET
IOREF
n/c
JP1
I/O_H
~9
~10
~11
12
13
AREF
SDA
SCL
Arduino Uno
IC1
MCP23017SP
VDD
RESET
INTA
INTB
VSS
GPA0
GPA1
GPA2
GPA3
GPA4
GPA5
GPA6
GPA7
GPB0
GPB1
GPB2
GPB3
GPB4
GPB5
GPB6
GPB7
JMP9-0R
JMP8-0R
JMP7-0R
JP4
ON/OFF
JP5
DIR
X3
2092-1152
X12
2092-1152
D3
SCL
SDA
FS20SM8
DFF-Steuerung
- Arduino-CPU
FS20SM8_DFF_MPC23017
22.08.16 14:00
Sheet: 1/1