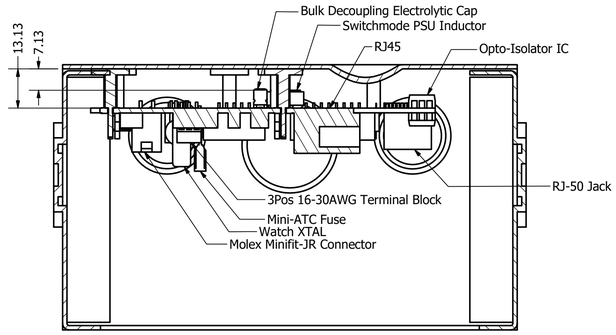

SECTION B-B
SCALE 1 : 1

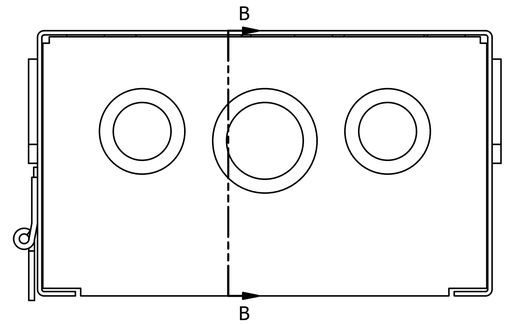

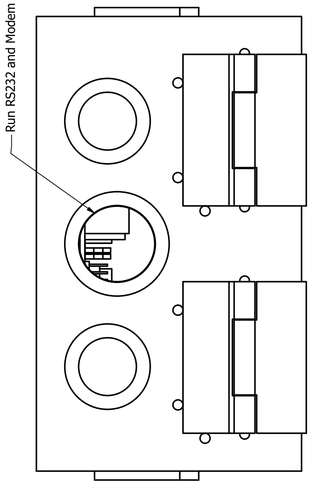

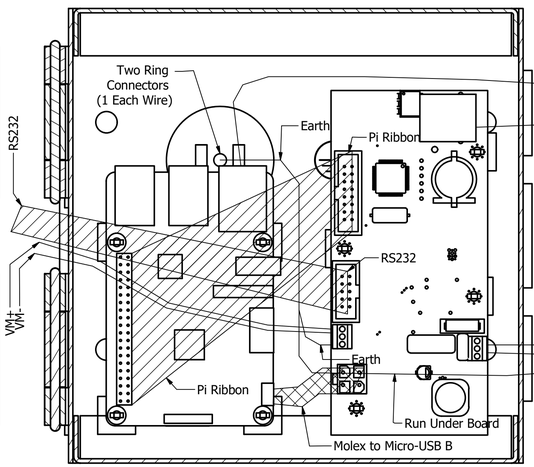

SECTION C-C
SCALE 1 : 1

SECTION A-A
SCALE 1 : 1

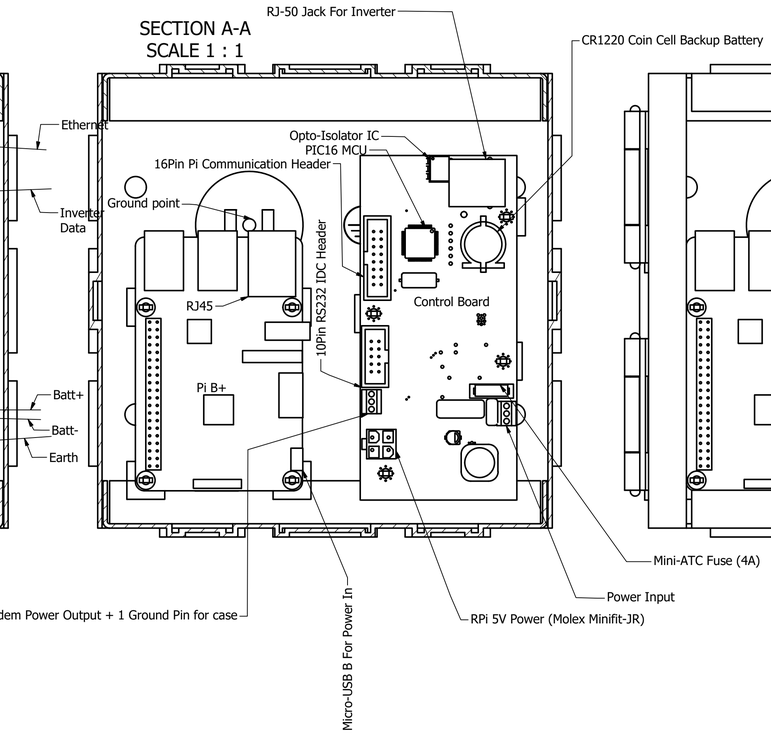

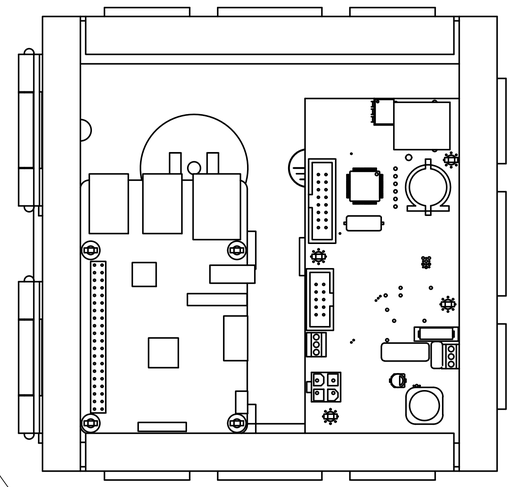

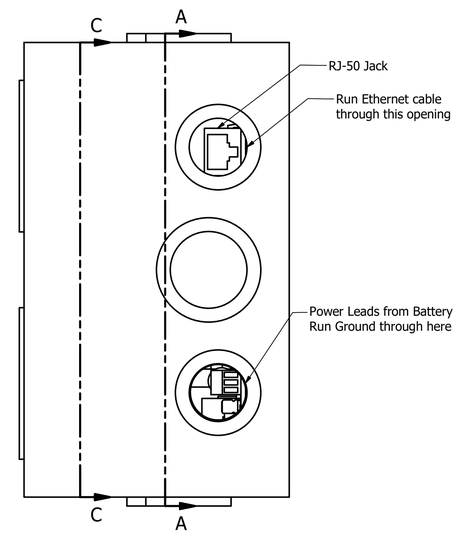

Note: Potentially run RS232 and VM+/- under
Pi board for neatness.

All wires should be 16 AWG with the exception of
the RS232 and Pi Ribbon wires.

Ground wires should EACH fasten to enclosure
via screw and crimped ring connectors. (That means
two connectors total for the 2 wires).
Secure with shake-proof bolt set-up.

DRAWN jfixelle	8/11/2016		
CHECKED		TITLE	
QA			
MFG			
APPROVED		SIZE D	DWG NO ControlHousing	REV
		SCALE 1 : 1	SHEET 1 OF 1