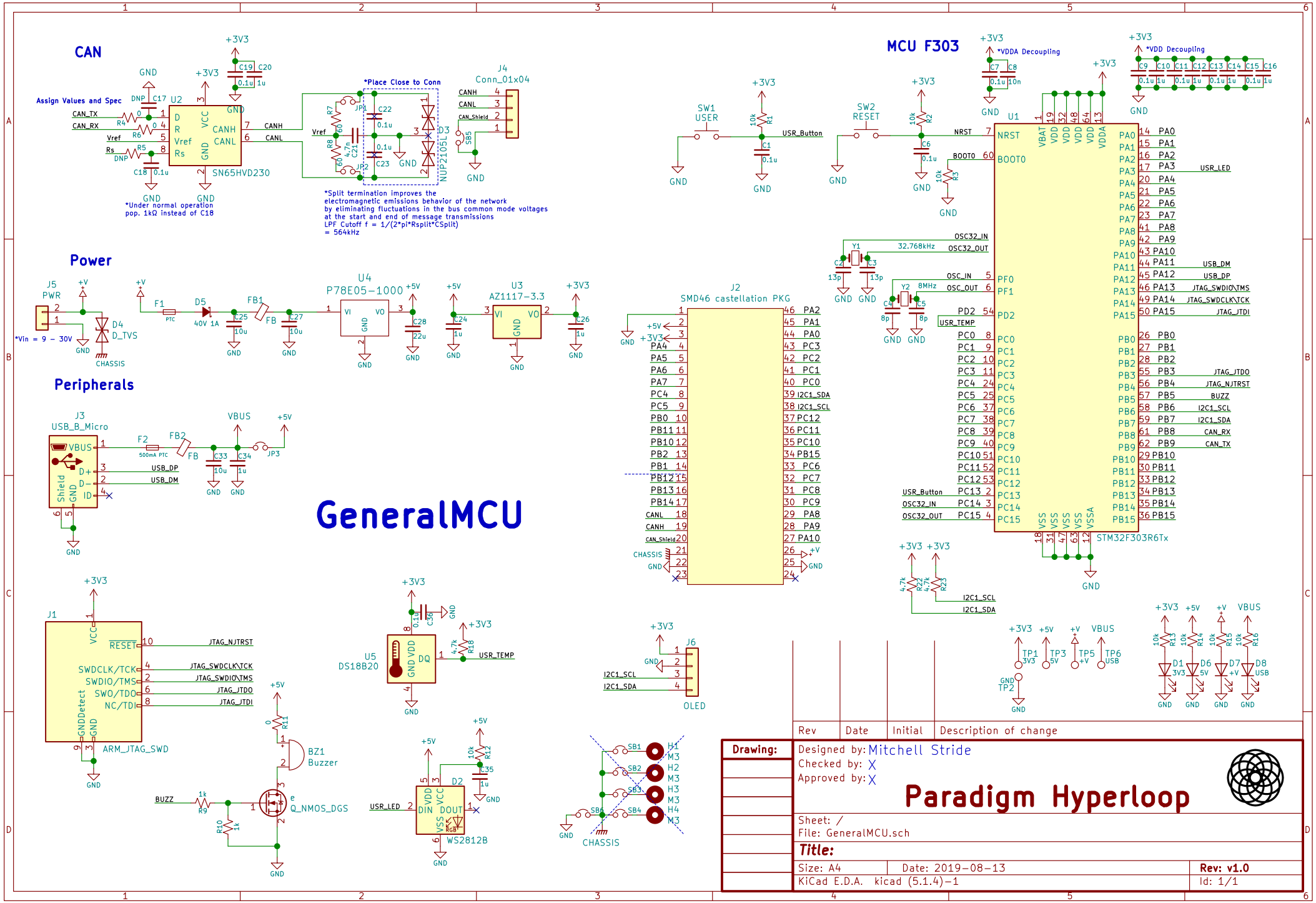
CAN
Assign Values and Spec
U2
SN65HVD230
*Place Close to Conn
J4
Conn_01x04
NUP2105L
*Under normal operation
pop. 1kΩ instead of C18
*Split termination improves the
electromagnetic emissions behavior of the network
by eliminating fluctuations in the bus common mode voltages
at the start and end of message transmissions
LPF Cutoff f = 1/(2*pi*Rsplit*CSplit)
= 564kHz
MCU F303
U1
STM32F303R6Tx
*VDDA Decoupling
*VDD Decoupling
SW1
USER
SW2
RESET
Power
J5
PWR
*Vin = 9 - 30V
D4
D_TVS
CHASSIS
U4
P78E05-1000
U3
AZ1117-3.3
Peripherals
J3
USB_B_Micro
J2
SMD46 castellation PKG
GeneralMCU
J1
ARM_JTAG_SWD
U5
DS18B20
BZ1
Buzzer
Q_NMOS_DGS
D2
WS2812B
J6
OLED
CHASSIS
Rev
Date
Initial
Description of change
Drawing:
Designed by: Mitchell Stride
Checked by: X
Approved by: X
Paradigm Hyperloop
Sheet: /
File: GeneralMCU.sch
Title:
Size: A4
Date: 2019-08-13
Rev: v1.0
KiCad E.D.A. kicad (5.1.4)-1
Id: 1/1