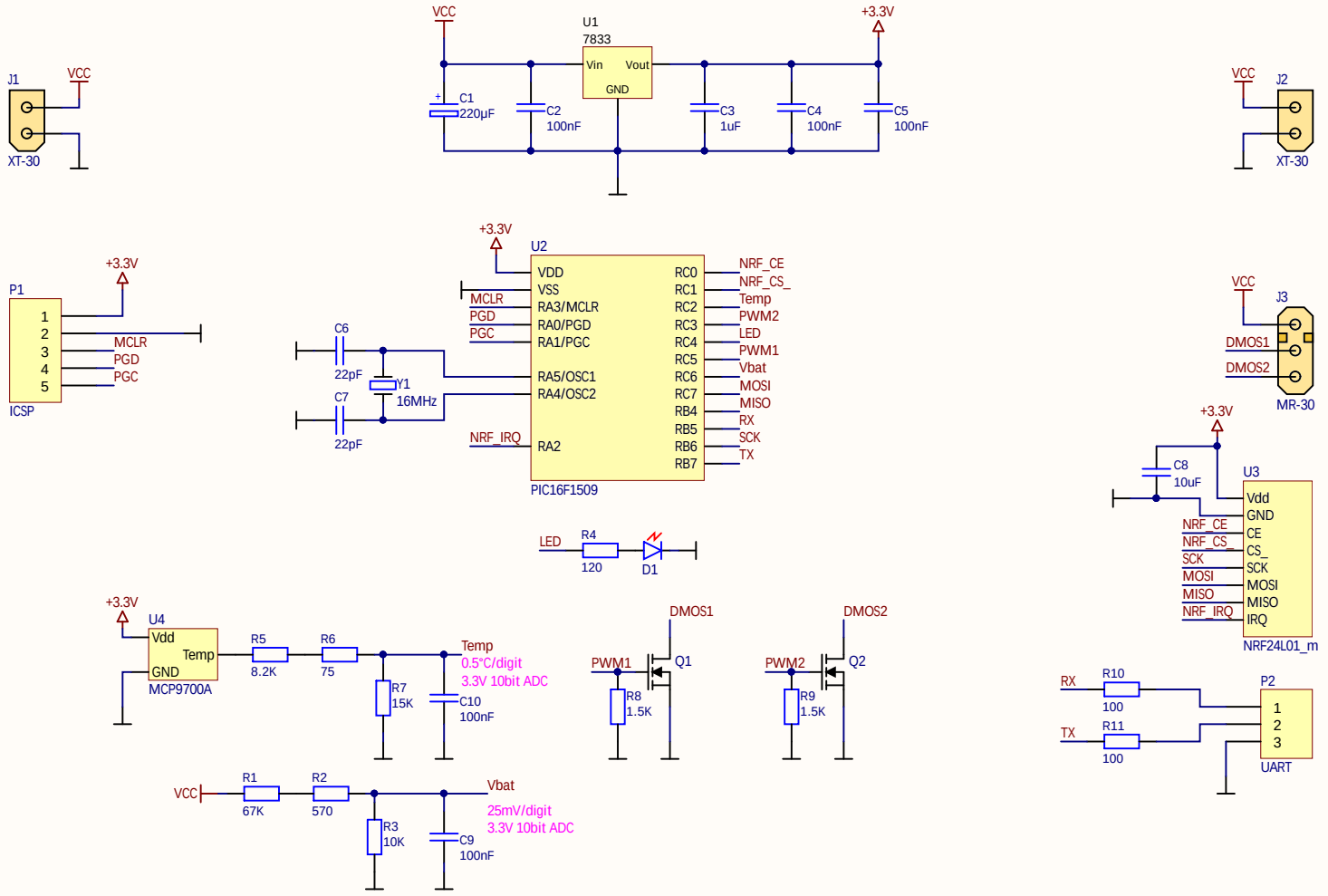

Title		
Size A4	Number	Revision
Date: 11/03/2021		Sheet of
File: C:\Users\..\schematic.SchDoc		Drawn By: