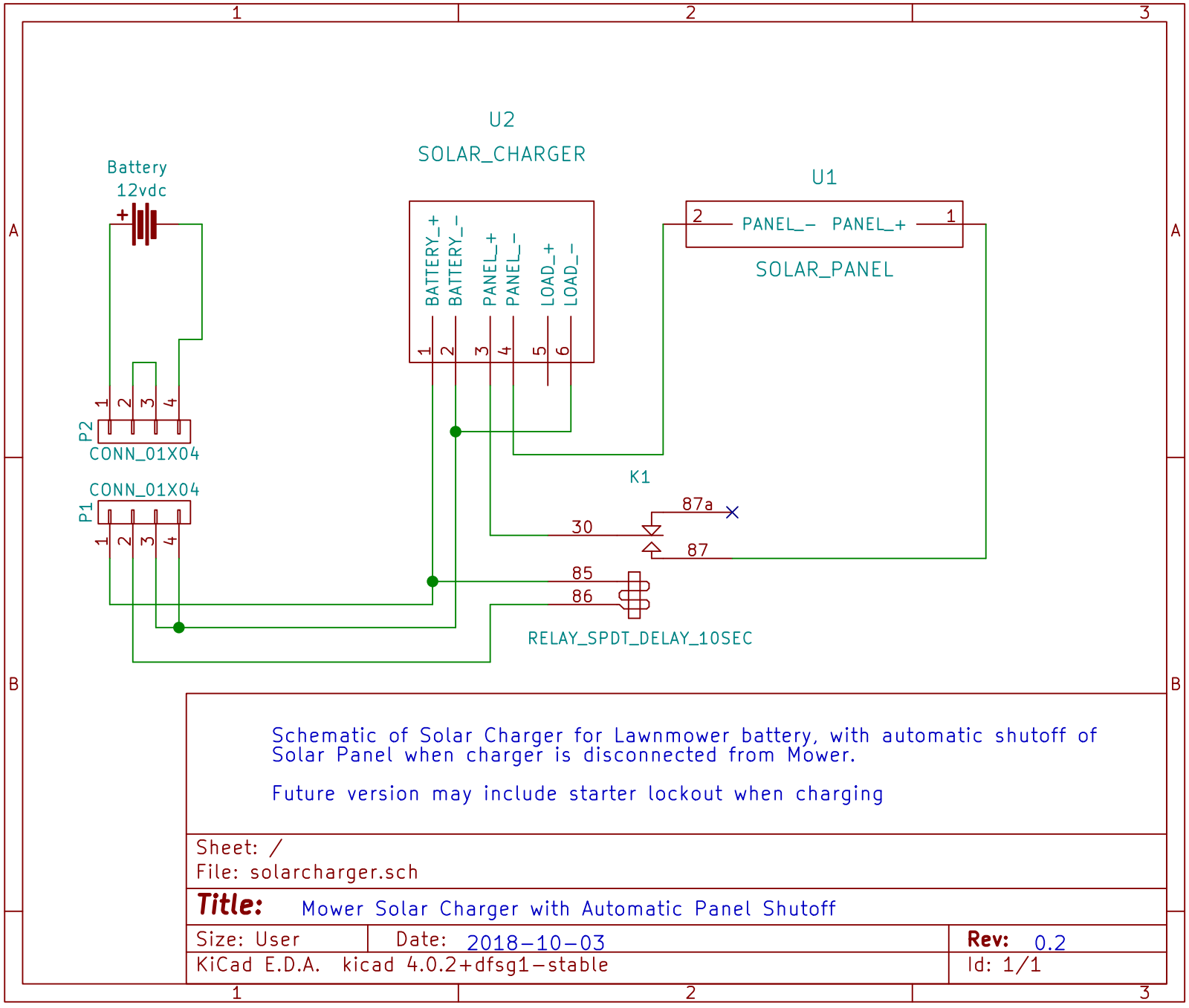

Schematic of Solar Charger for Lawnmower battery, with automatic shutoff of Solar Panel when charger is disconnected from Mower.

Future version may include starter lockout when charging

Sheet: /
File: solarcharger.sch

Title: Mower Solar Charger with Automatic Panel Shutoff

Size: User	Date: 2018-10-03	**Rev:** 0.2
KiCad E.D.A. kicad 4.0.2+dfsg1-stable		Id: 1/1