This 120vac power supply provides +6vdc, −12vdc, −80vdc, and −3kvdc.
It also provides 6.8vac to the CRT heater and cathode, and
focus and intensity voltages and adjustments. Finally, there
is also a video input terminal which modulates the intensity.

DC voltages measured at various nodes are shown.

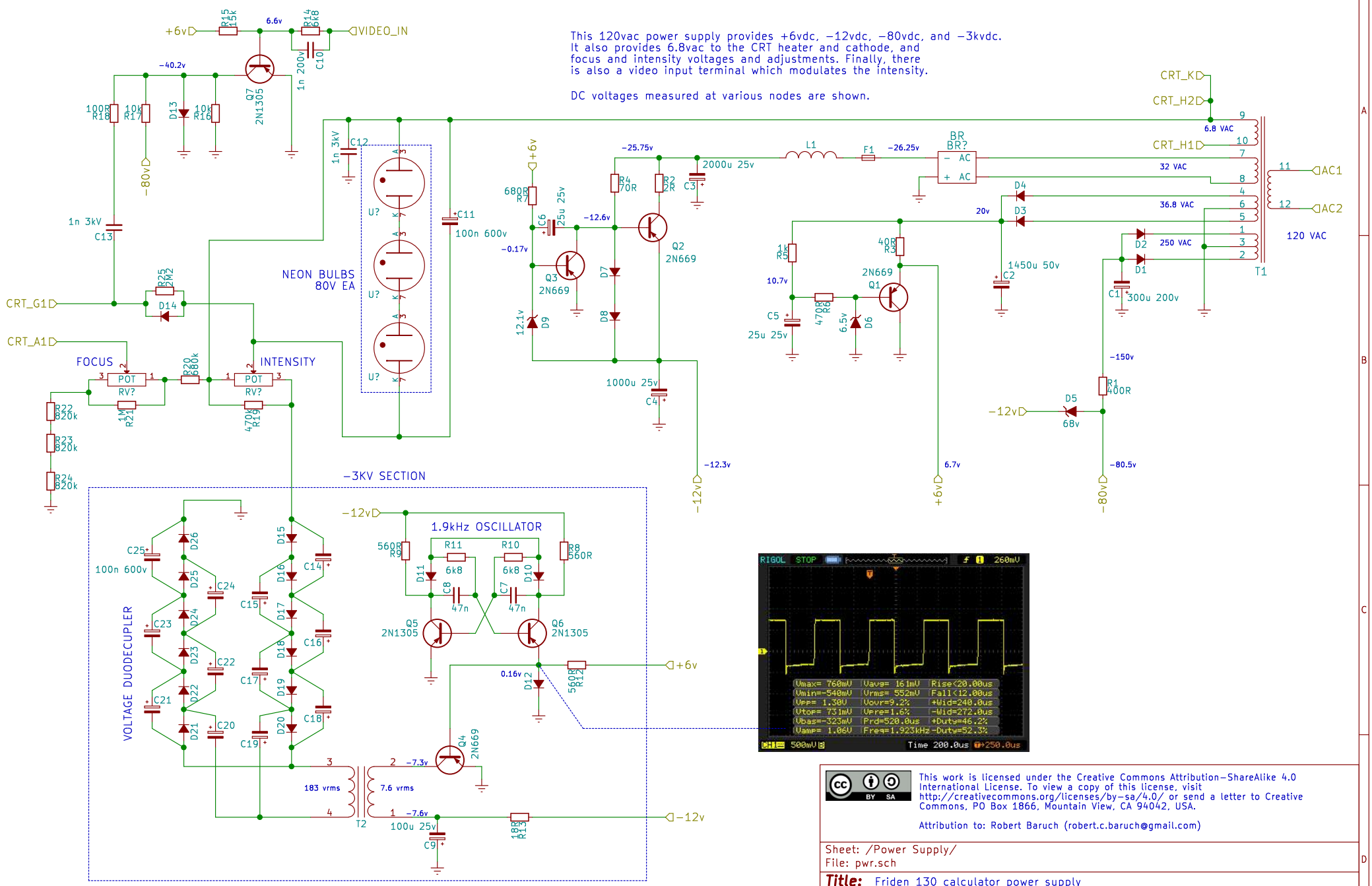

This work is licensed under the Creative Commons Attribution−ShareAlike 4.0 International License. To view a copy of this license, visit http://creativecommons.org/licenses/by-sa/4.0/ or send a letter to Creative Commons, PO Box 1866, Mountain View, CA 94042, USA.

Attribution to: Robert Baruch (robert.c.baruch@gmail.com)

Sheet: /Power Supply/
File: pwr.sch

Title: Friden 130 calculator power supply

Size: A4	Date: 13 Aug 2016	**Rev:** 1.0
KiCad E.D.A. kicad 4.0.2−stable		Id: 3/3