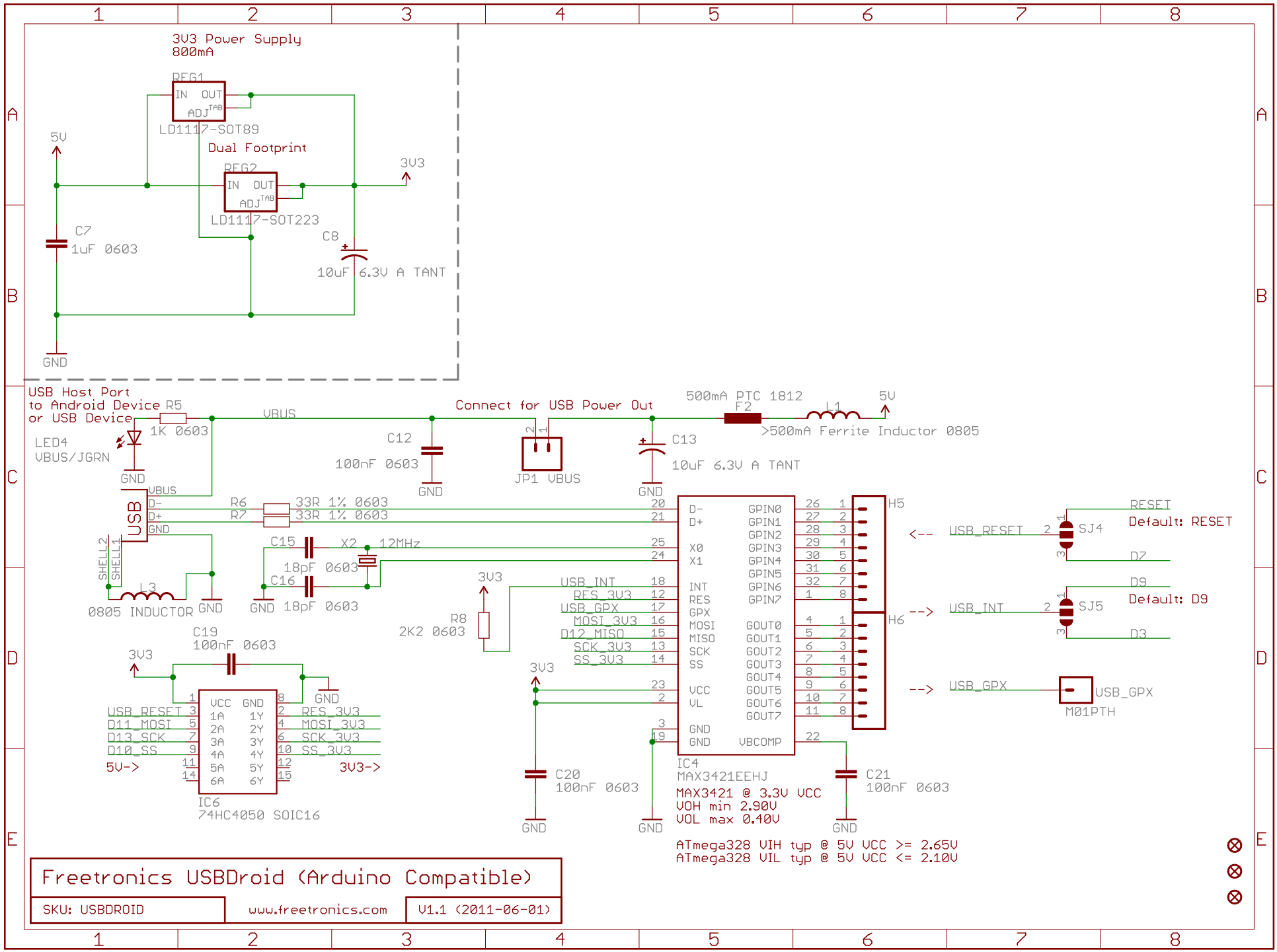
3V3 Power Supply
800mA
REG1
IN OUT
ADJ TAB
LD1117-SOT89
Dual Footprint
REG2
IN OUT
ADJ TAB
LD1117-SOT223
5V
3V3
C7
1uF 0603
C8
10uF 6.3V A TANT
GND
USB Host Port
to Android Device
or USB Device
R5
1K 0603
VBUS
LED4
VBUS/JGRN
Connect for USB Power Out
C12
100nF 0603
JP1 VBUS
C13
10uF 6.3V A TANT
500mA PTC 1812
F2
L1
>500mA Ferrite Inductor 0805
USB
VBUS
D-
D+
GND
SHELL2
SHELL1
R6
R7
33R 1% 0603
33R 1% 0603
C15
18pF 0603
X2
12MHz
C16
18pF 0603
L3
0805 INDUCTOR
R8
2K2 0603
C19
100nF 0603
IC6
74HC4050 SOIC16
USB_RESET
D11_MOSI
D13_SCK
D10_SS
5V->
RES_3V3
MOSI_3V3
SCK_3V3
SS_3V3
3V3->
USB_INT
USB_GPX
D12_MISO
D-
D+
X0
X1
INT
RES
GPX
MOSI
MISO
SCK
SS
VCC
VL
GND
GND
GPIN0
GPIN1
GPIN2
GPIN3
GPIN4
GPIN5
GPIN6
GPIN7
GOUT0
GOUT1
GOUT2
GOUT3
GOUT4
GOUT5
GOUT6
GOUT7
VBCOMP
IC4
MAX3421EEHJ
MAX3421 @ 3.3V VCC
VOH min 2.90V
VOL max 0.40V
C20
100nF 0603
C21
100nF 0603
H5
H6
<--
USB_RESET
SJ4
RESET
Default: RESET
D7
-->
USB_INT
SJ5
D9
Default: D9
D3
-->
USB_GPX
M01PTH
ATmega328 VIH typ @ 5V VCC >= 2.65V
ATmega328 VIL typ @ 5V VCC <= 2.10V
Freetronics USBDroid (Arduino Compatible)
SKU: USBDROID
www.freetronics.com
V1.1 (2011-06-01)

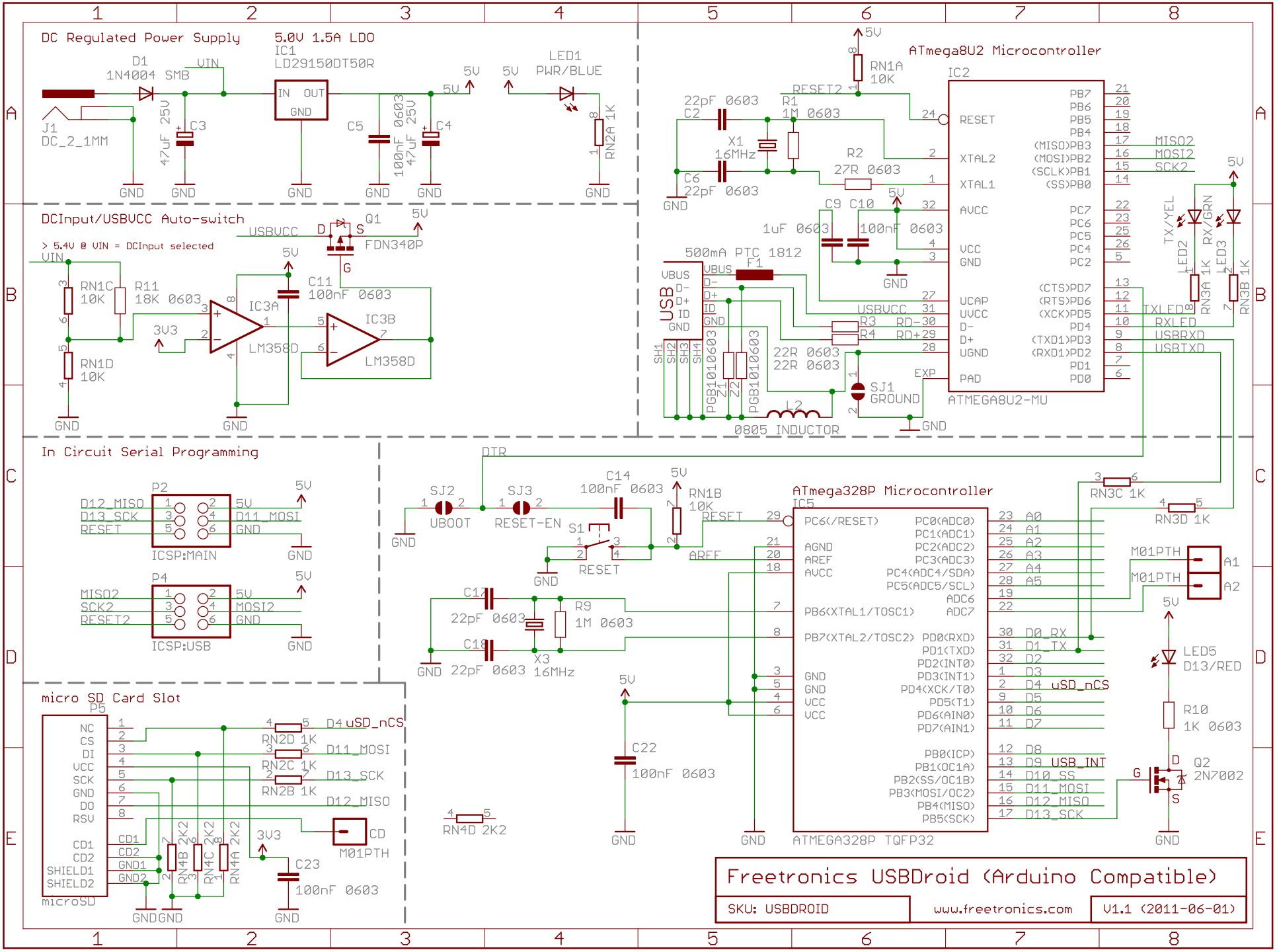
DC Regulated Power Supply
5.0V 1.5A LDO
IC1
LD29150DT50R
D1
1N4004 SMB
VIN
J1
DC_2_1MM
C3
47uF 25V
C5
100nF 0603
C4
47uF 25V
LED1
PWR/BLUE
RN2A 1K
GND
DCInput/USBVCC Auto-switch
> 5.4V @ VIN = DCInput selected
USBVCC
Q1
FDN340P
RN1C
10K
R11
18K 0603
RN1D
10K
3V3
IC3A
IC3B
LM358D
C11
100nF 0603
ATmega8U2 Microcontroller
IC2
RN1A
10K
RESET2
R1
1M 0603
22pF 0603
C2
X1
16MHz
C6
22pF 0603
R2
27R 0603
C9 C10
1uF 0603
100nF 0603
500mA PTC 1812
F1
USB
VBUS
D-
D+
ID
GND
SH1
SH2
SH3
SH4
PGB1010603
Z1
Z2
R3
R4
22R 0603
22R 0603
SJ1
GROUND
L2
0805 INDUCTOR
ATMEGA8U2-MU
MISO2
MOSI2
SCK2
TXLED
RXLED
USBRXD
USBTXD
TX/YEL
RX/GRN
LED2
LED3
RN3A 1K
RN3B 1K
In Circuit Serial Programming
P2
D12_MISO
D13_SCK
RESET
D11_MOSI
ICSP:MAIN
P4
MISO2
SCK2
RESET2
MOSI2
ICSP:USB
DTR
SJ2
UBOOT
SJ3
RESET-EN
C14
100nF 0603
RN1B
10K
S1
RESET
AREF
C17
22pF 0603
R9
1M 0603
C18
22pF 0603
X3
16MHz
C22
100nF 0603
RN4D 2K2
ATmega328P Microcontroller
IC5
ATMEGA328P TQFP32
RN3C 1K
RN3D 1K
M01PTH
A1
A2
LED5
D13/RED
R10
1K 0603
Q2
2N7002
D0_RX
D1_TX
uSD_nCS
D9_USB_INT
D10_SS
D11_MOSI
D12_MISO
D13_SCK
micro SD Card Slot
P5
microSD
RN2D 1K
RN2C 1K
RN2B 1K
RN4B 2K2
RN4C 2K2
RN4A 2K2
CD
M01PTH
C23
100nF 0603
Freetronics USBDroid (Arduino Compatible)
SKU: USBDROID
www.freetronics.com
V1.1 (2011-06-01)

Prototyping Area

Draw your project schematic here