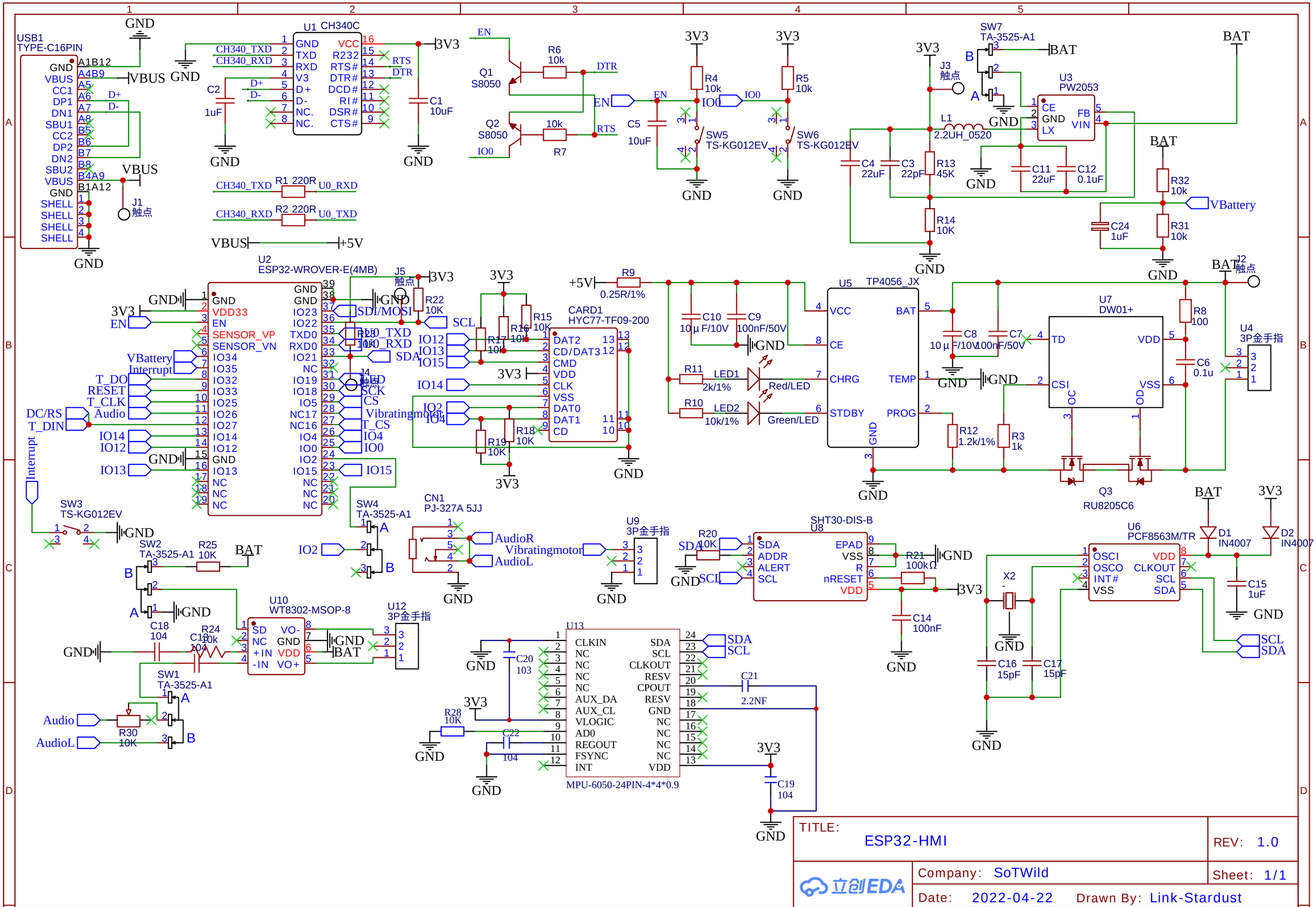
USB1
TYPE-C16PIN
U1 CH340C
U2
ESP32-WROVER-E(4MB)
U3
PW2053
U5
TP4056_JX
U7
DW01+
U8
SHT30-DIS-B
U6
PCF8563M/TR
U9
3P金手指
U10
WT8302-MSOP-8
U12
3P金手指
U13
MPU-6050-24PIN-4*4*0.9
CARD1
HYC77-TF09-200
CN1
PJ-327A 5JJ
SW7
TA-3525-A1
SW5
TS-KG012EV
SW6
TS-KG012EV
SW3
TS-KG012EV
SW2
TA-3525-A1
SW1
TA-3525-A1
SW4
TA-3525-A1
Q1
S8050
Q2
S8050
Q3
RU8205C6
D1
IN4007
D2
IN4007
J1
触点
J2
触点
J3
触点
J5
触点
U4
3P金手指
VBattery
BAT
3V3
VBUS
+5V
GND
EN
IO0
DTR
RTS
CH340_TXD
CH340_RXD
U0_RXD
U0_TXD
SDI/MOSI
SDA
SCL
LED
SCK
CS
Vibratingmotor
T_CS
IO4
IO15
IO12
IO13
IO14
IO2
Interrupt
DC/RS
T_DIN
T_CLK
RESET
T_DO
Audio
AudioL
AudioR
R1 220R
R2 220R
R6 10k
R7 10k
R4 10k
R5 10k
R13 45K
R14 10K
R32 10k
R31 10k
R22 10K
R9 0.25R/1%
R11 2k/1%
R10 10k/1%
R12 1.2k/1%
R3 1k
R8 100
R20 10K
R21 100kΩ
R25 10K
R24 10k
R30 10K
R28 10K
R18 10K
R19 10K
R15 10k
R16 10k
R17 10k
C1 10uF
C2 1uF
C5 10uF
C4 22uF
C3 22pF
L1 2.2UH_0520
C11 22uF
C12 0.1uF
C24 1uF
C10 10μF/10V
C9 100nF/50V
C8 10μF/10V
C7 100nF/50V
C6 0.1u
C15 1uF
C16 15pF
C17 15pF
C14 100nF
C18 104
C19 104
C20 103
C21 2.2NF
C22 104
X2
Red/LED
Green/LED
LED1
LED2
TITLE:
ESP32-HMI
REV: 1.0
Company: SoTWild
Sheet: 1/1
Date: 2022-04-22
Drawn By: Link-Stardust
立创EDA

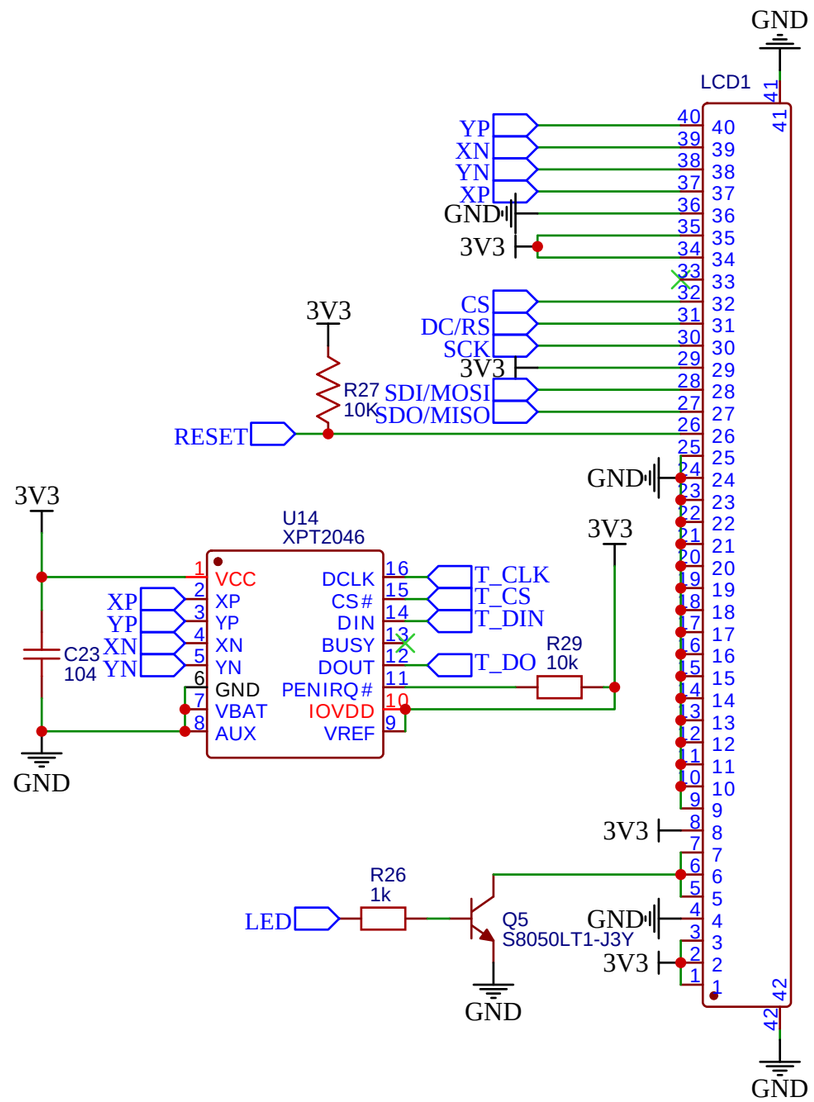

TITLE: Sheet_2		REV: 1.0
嘉立创EDA	Company: Your Company	Sheet: 1/1
	Date: 2022-07-26 Drawn By: Link-Stardust	