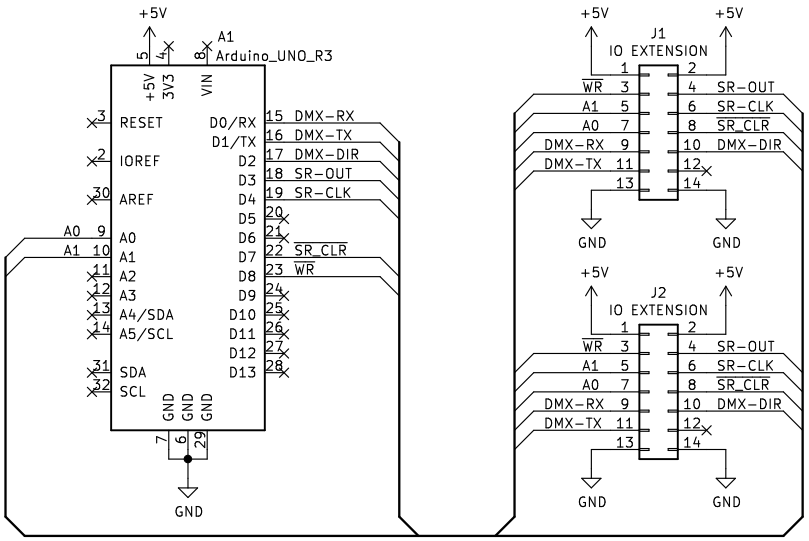


Released under the Creative Commons Attribution Share-Alike 4.0 License
https://creativecommons.org/licenses/by-sa/4.0/
Designed by: SparkyBobo

**Sparky Bobo Designs**

Sheet: /
File: receiver-io.sch

**Title: DMX Demonstrator - Receiver IO Module (DMX-RX2)**
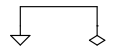
| | | |
|---|---|---|
| Size: A4 | Date: 2023-10-28 | **Rev: 1.2** |
| KiCad E.D.A. kicad (5.1.12)-1 | | Id: 1/1 |