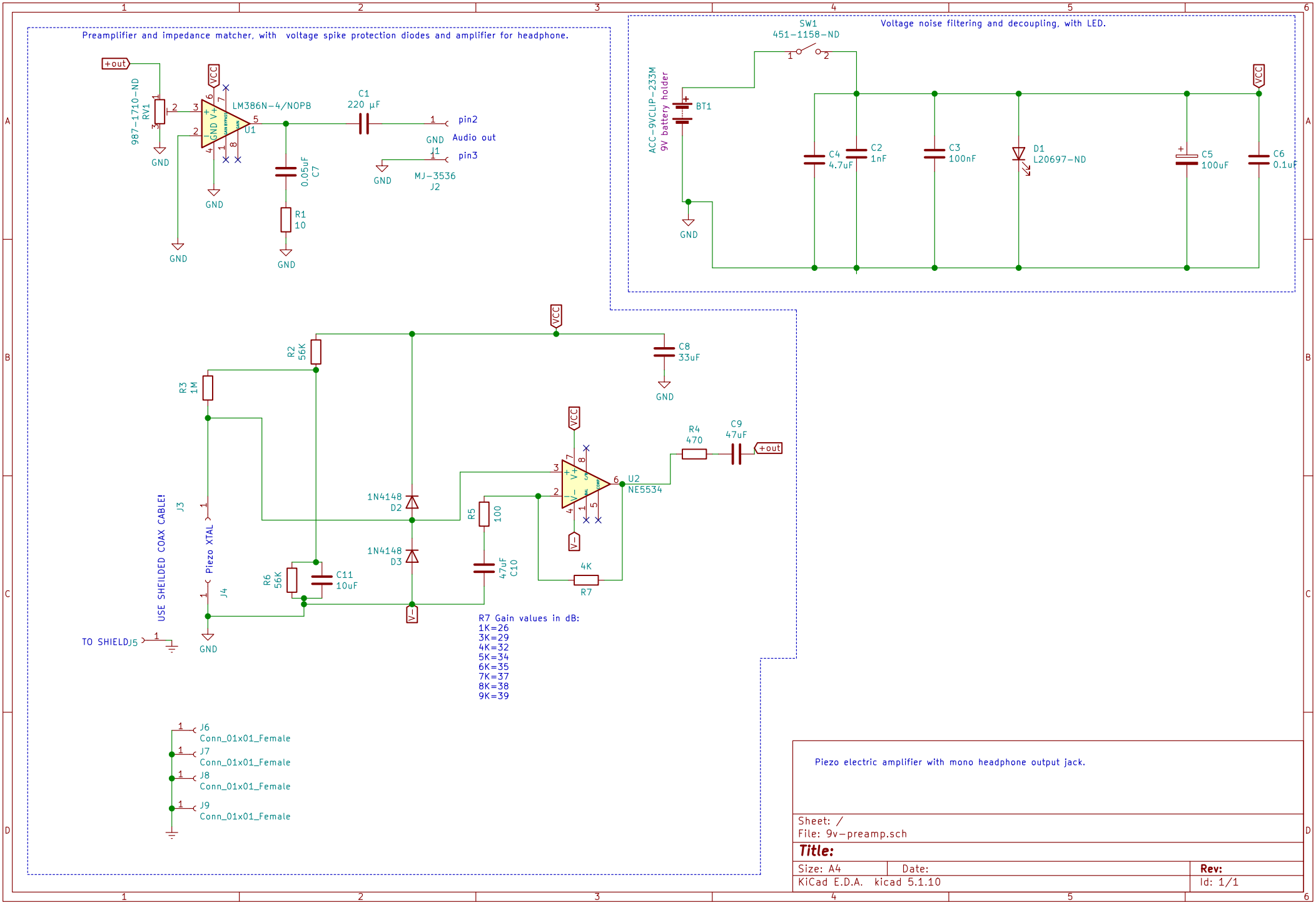
Preamplifier and impedance matcher, with voltage spike protection diodes and amplifier for headphone.
+out
987-1710-ND
RV1
GND
VCC
LM386N-4/NOPB
U1
C1
220 µF
pin2
GND
Audio out
J1
pin3
MJ-3536
J2
0.05uF
C7
R1
10
Voltage noise filtering and decoupling, with LED.
SW1
451-1158-ND
ACC-9VCLIP-233M
9V battery holder
BT1
C4
4.7uF
C2
1nF
C3
100nF
D1
L20697-ND
C5
100uF
C6
0.1uF
R2
56K
R3
1M
C8
33uF
R4
470
C9
47uF
U2
NE5534
1N4148
D2
1N4148
D3
R5
100
47uF
C10
4K
R7
R6
56K
C11
10uF
V-
J3
Piezo XTAL
J4
USE SHEILDED COAX CABLE!
TO SHIELD
J5
R7 Gain values in dB:
1K=26
3K=29
4K=32
5K=34
6K=35
7K=37
8K=38
9K=39
J6
Conn_01x01_Female
J7
Conn_01x01_Female
J8
Conn_01x01_Female
J9
Conn_01x01_Female
Piezo electric amplifier with mono headphone output jack.
Sheet: /
File: 9v-preamp.sch
Title:
Size: A4
Date:
Rev:
KiCad E.D.A. kicad 5.1.10
Id: 1/1