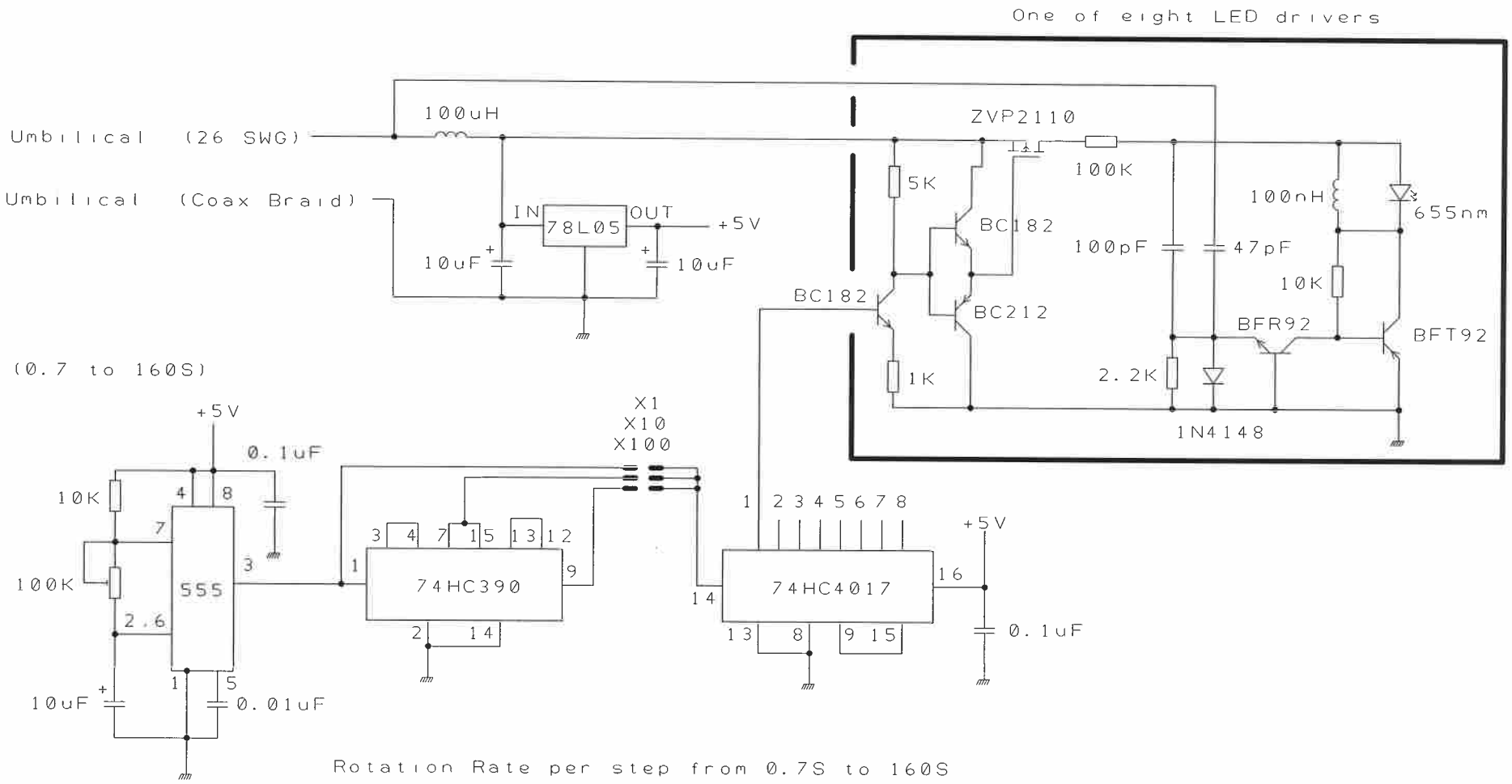

					UFO			RICHARD WHITE University of Sussex	
							SNO_UFO.sch	09/03/16	001