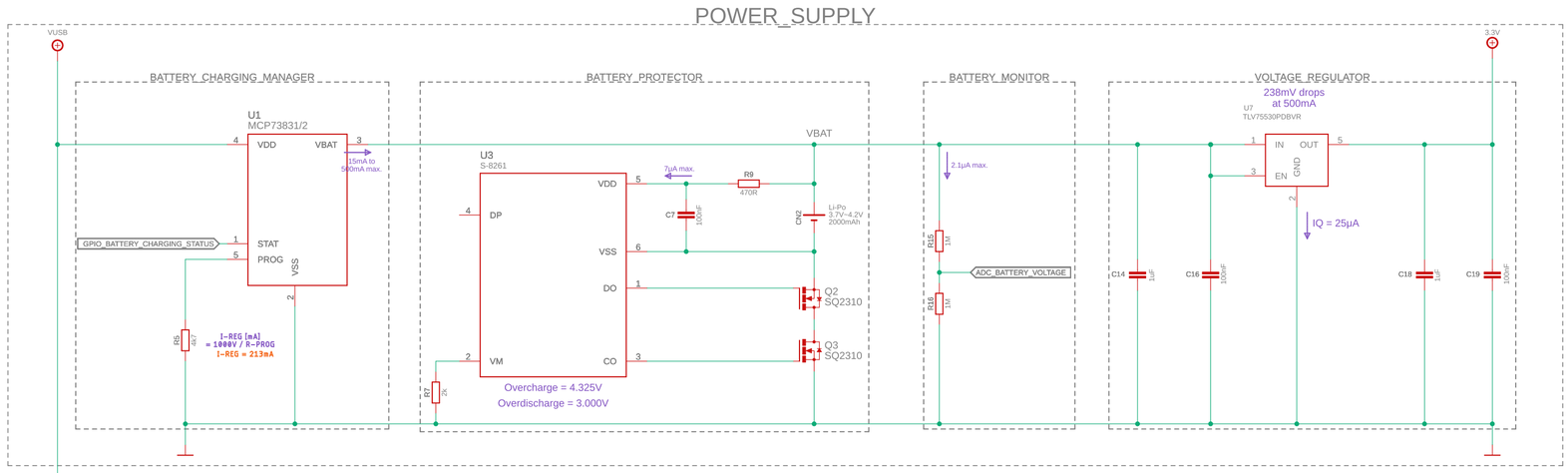

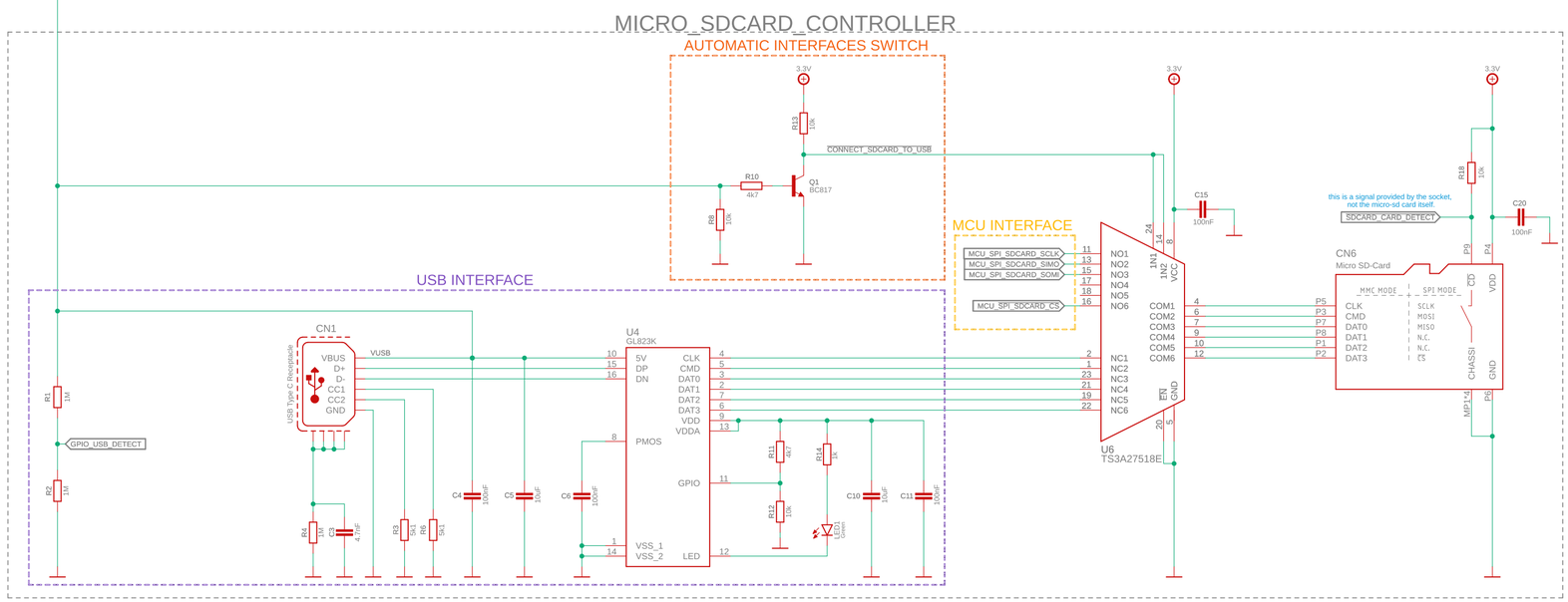

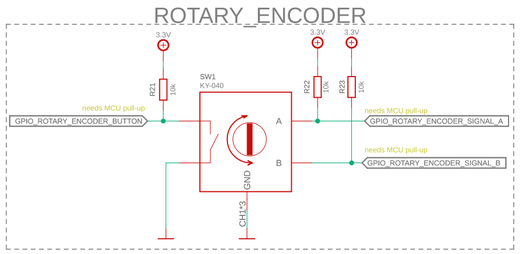

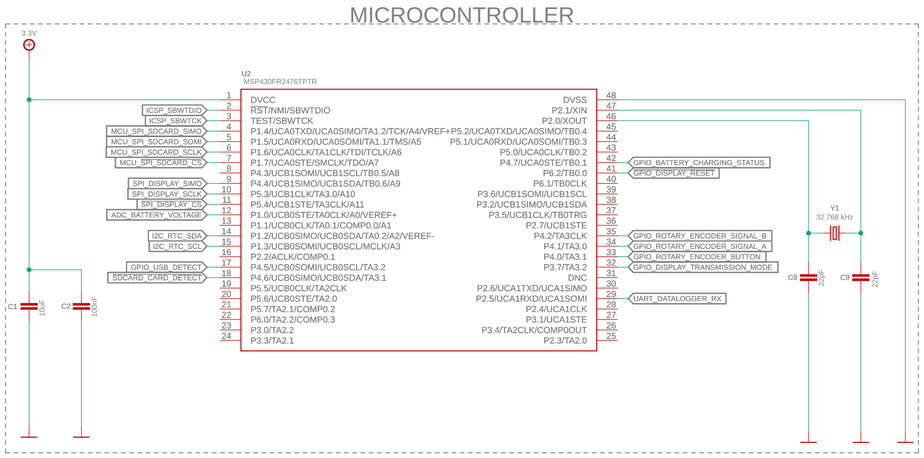

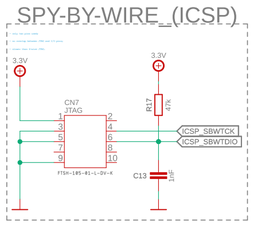

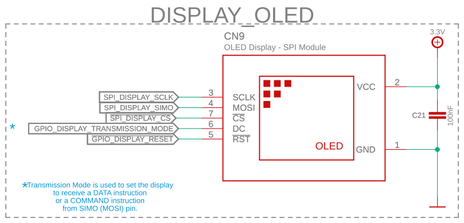

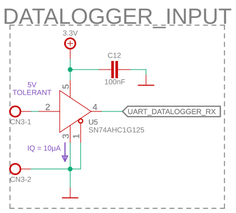

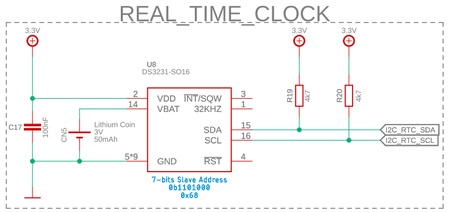

DESIGN BY:

Tiago Silva

github.com/TiagoPaulaSilva/NoteIt

open hardware

PROJECT TITLE: NoteIt

SHEET TITLE: COMPLETE SCHEMATIC | SHEET: 1/1

DATE: 18/06/2022 18:24 | REV.: 3.0