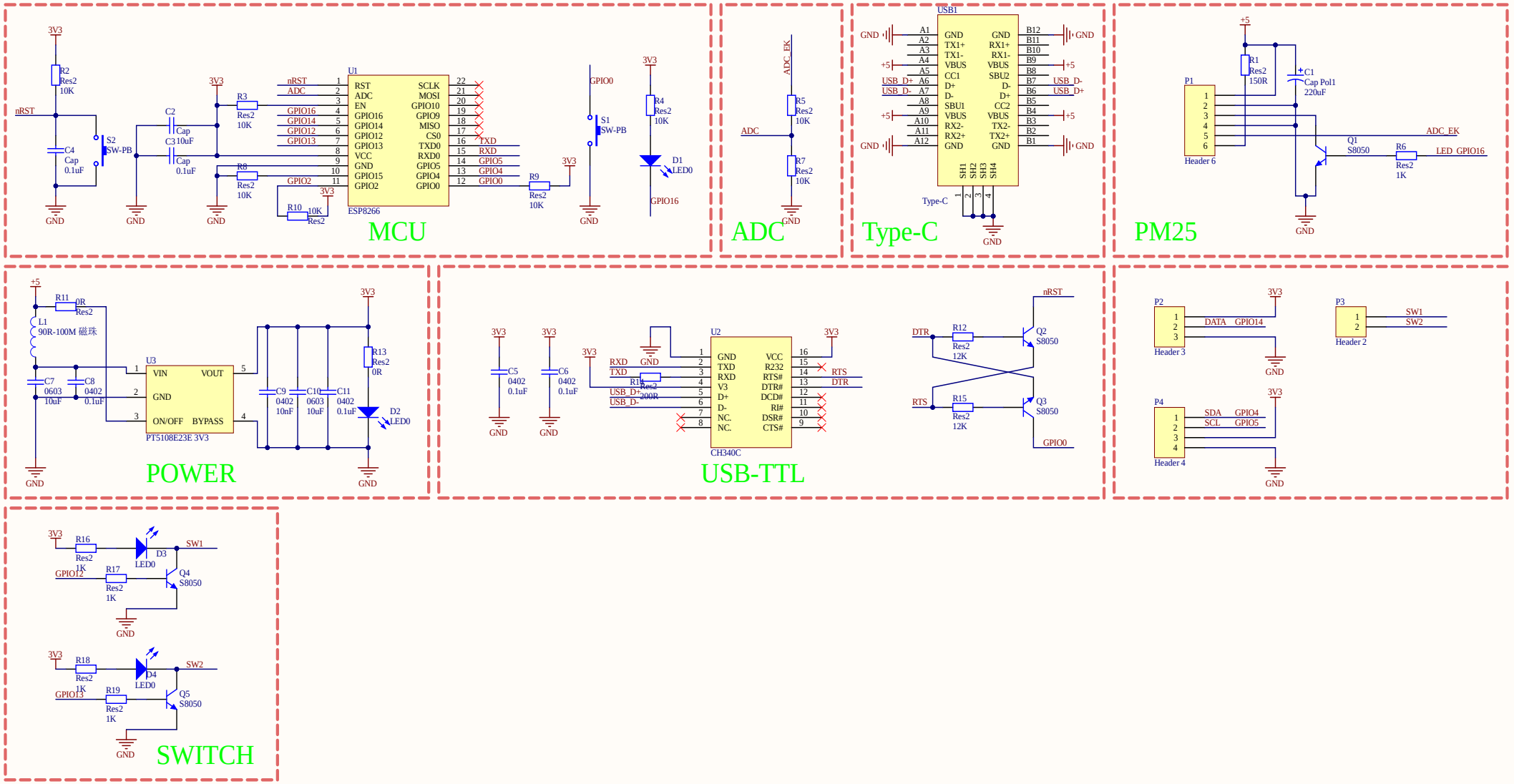

Title AIR			YHLD
Size: A3	Number: *	Revision: V1	
Date: 2022/3/8	Time: 11:14:23	Sheet 1 of *	
File: C:\Users\HIAPAD\Desktop\ _工程\air-esp8266\Sheet1.SchDoc			