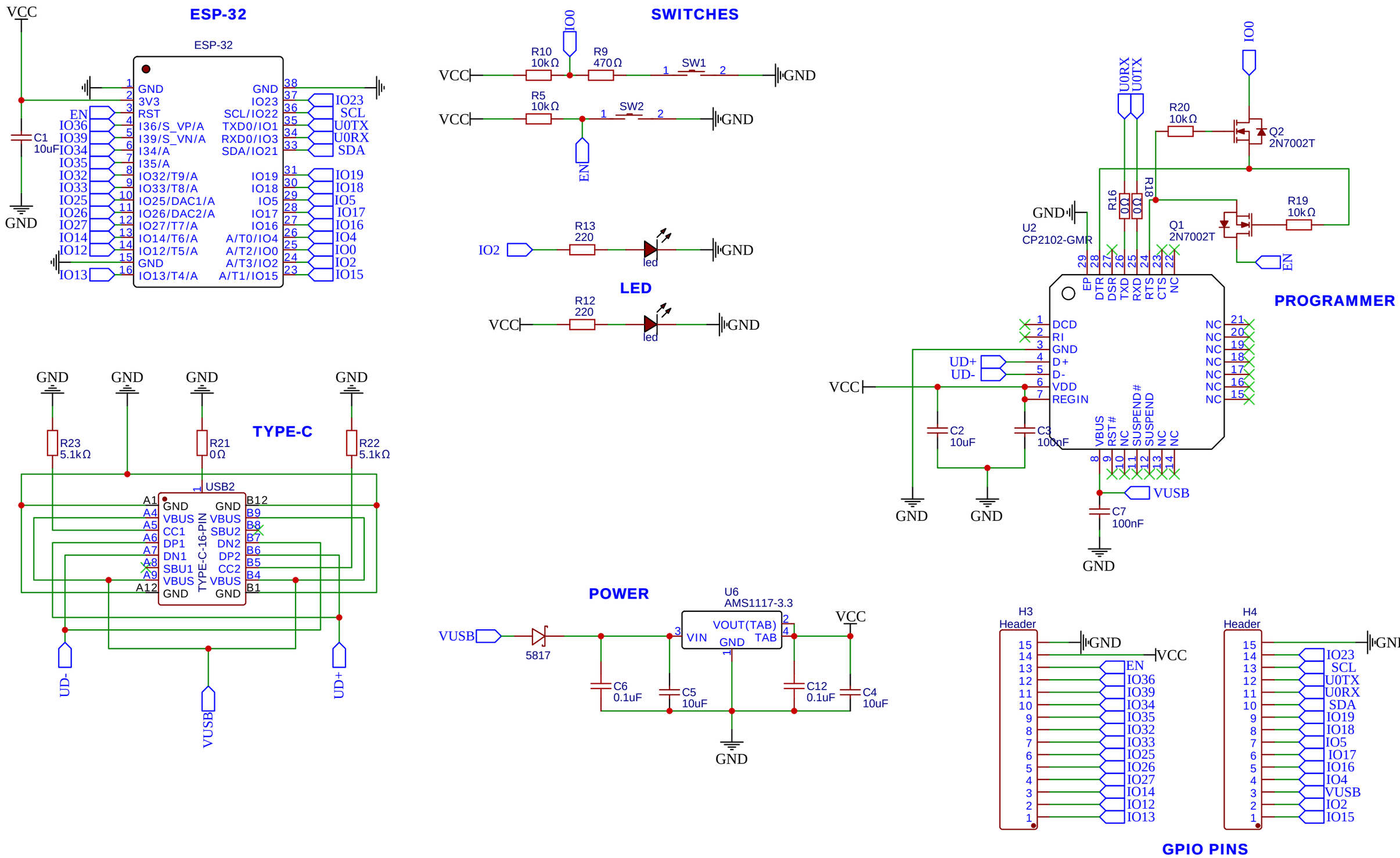

TITLE: Esp32 V1.0		REV: 1.0
EasyEDA	Company: Zeno Modiff	Sheet: 1/1
	Date: 2022-08-27 Drawn By: SREERAM AJ	