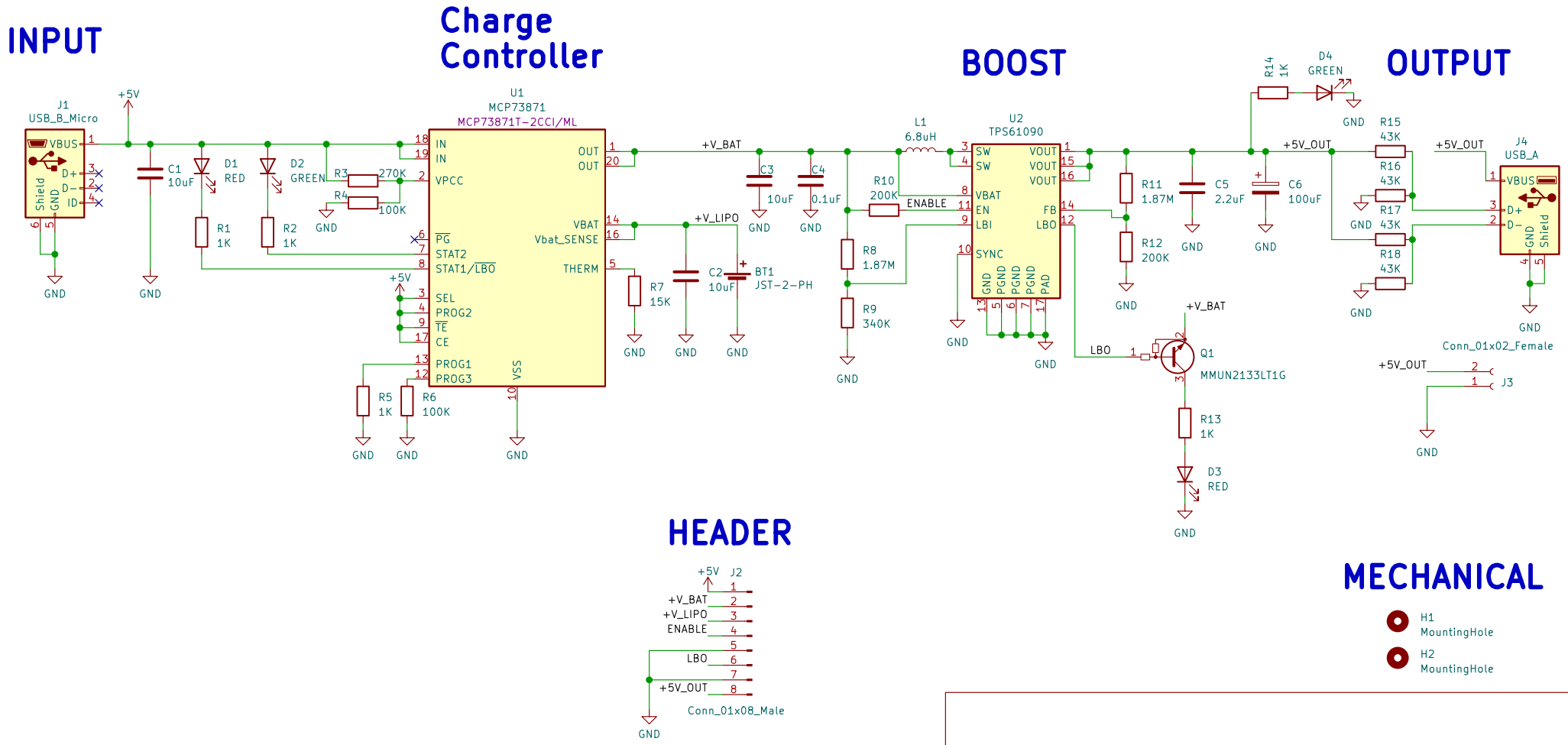

Drawn by: Hemal Chevli(@hemalchevli)

Sheet: /
File: Adafruit-PowerBoost-1000C.kicad_sch

Title: Adafruit PowerBoost 1000C

Size: A4	Date: 2021-06-14	Rev:
KiCad E.D.A. kicad (5.99.0-10766-geeb405c196)		Id: 1/1