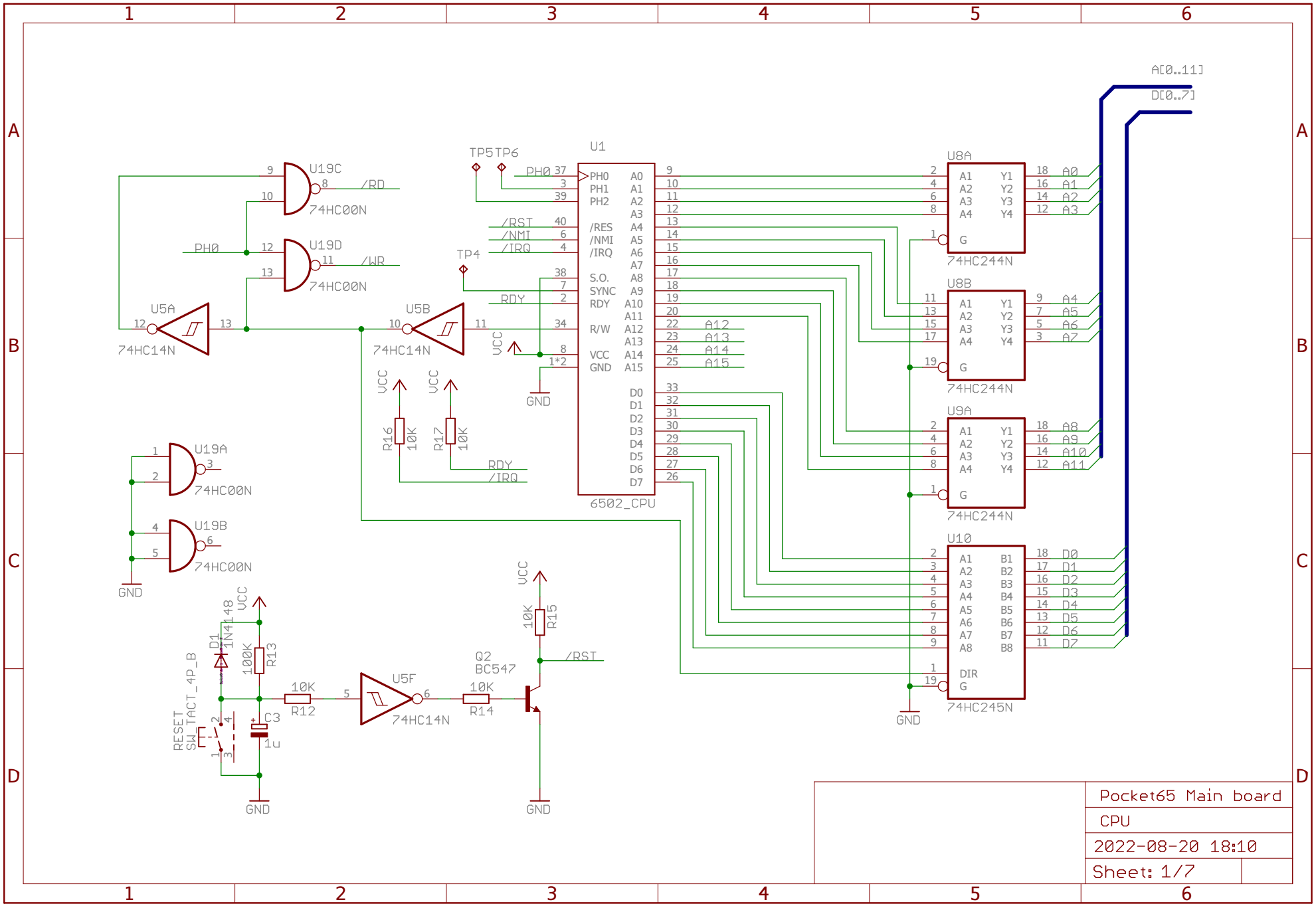
A[0..11]
D[0..7]
U1
6502_CPU
PH0
PH1
PH2
/RES
/NMI
/IRQ
S.O.
SYNC
RDY
R/W
VCC
GND
A0
A1
A2
A3
A4
A5
A6
A7
A8
A9
A10
A11
A12
A13
A14
A15
D0
D1
D2
D3
D4
D5
D6
D7
TP5
TP6
TP4
/RST
/NMI
/IRQ
RDY
U19C
74HC00N
/RD
U19D
74HC00N
/WR
U5A
74HC14N
U5B
74HC14N
U19A
74HC00N
U19B
74HC00N
R16
10K
R17
10K
RDY
/IRQ
U8A
74HC244N
U8B
74HC244N
U9A
74HC244N
U10
74HC245N
DIR
G
D1
1N4148
R13
100K
RESET
SW_TACT_4P_B
C3
1u
R12
10K
U5F
74HC14N
R14
10K
Q2
BC547
R15
10K
/RST
Pocket65 Main board
CPU
2022-08-20 18:10
Sheet: 1/7

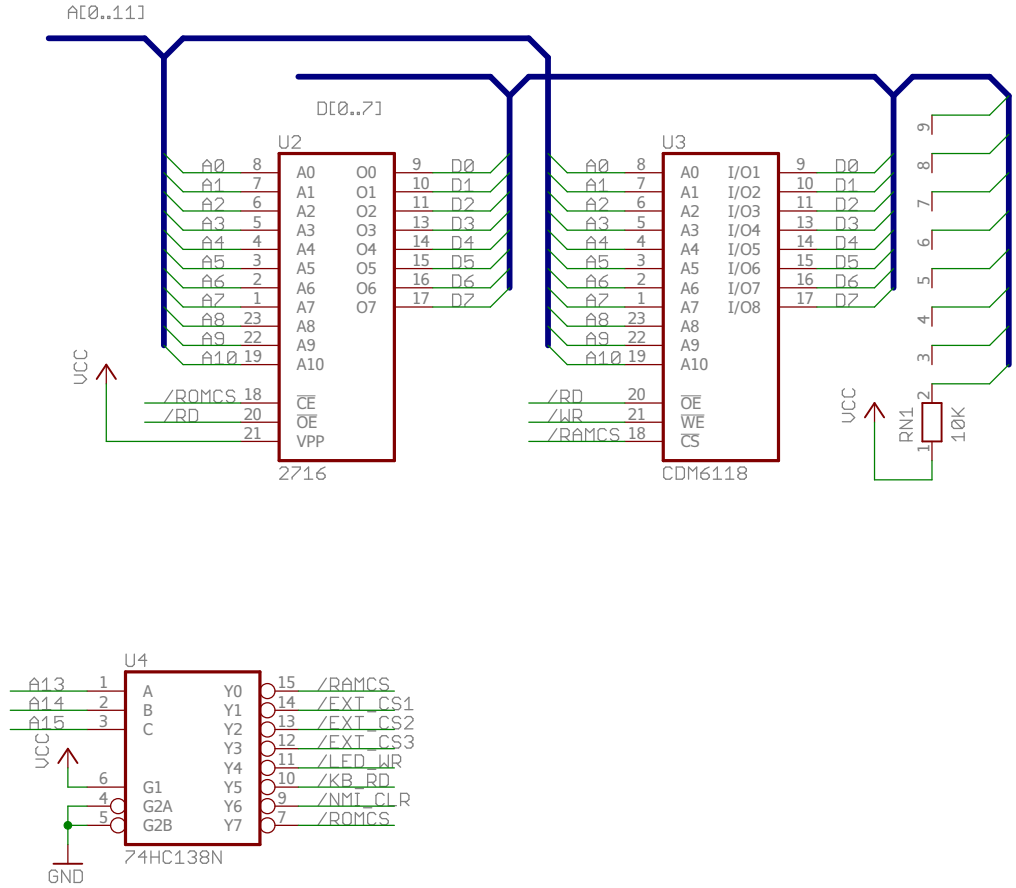

	Pocket65 Main board
	Memory
	2022-08-20 18:10
	Sheet: 2/7

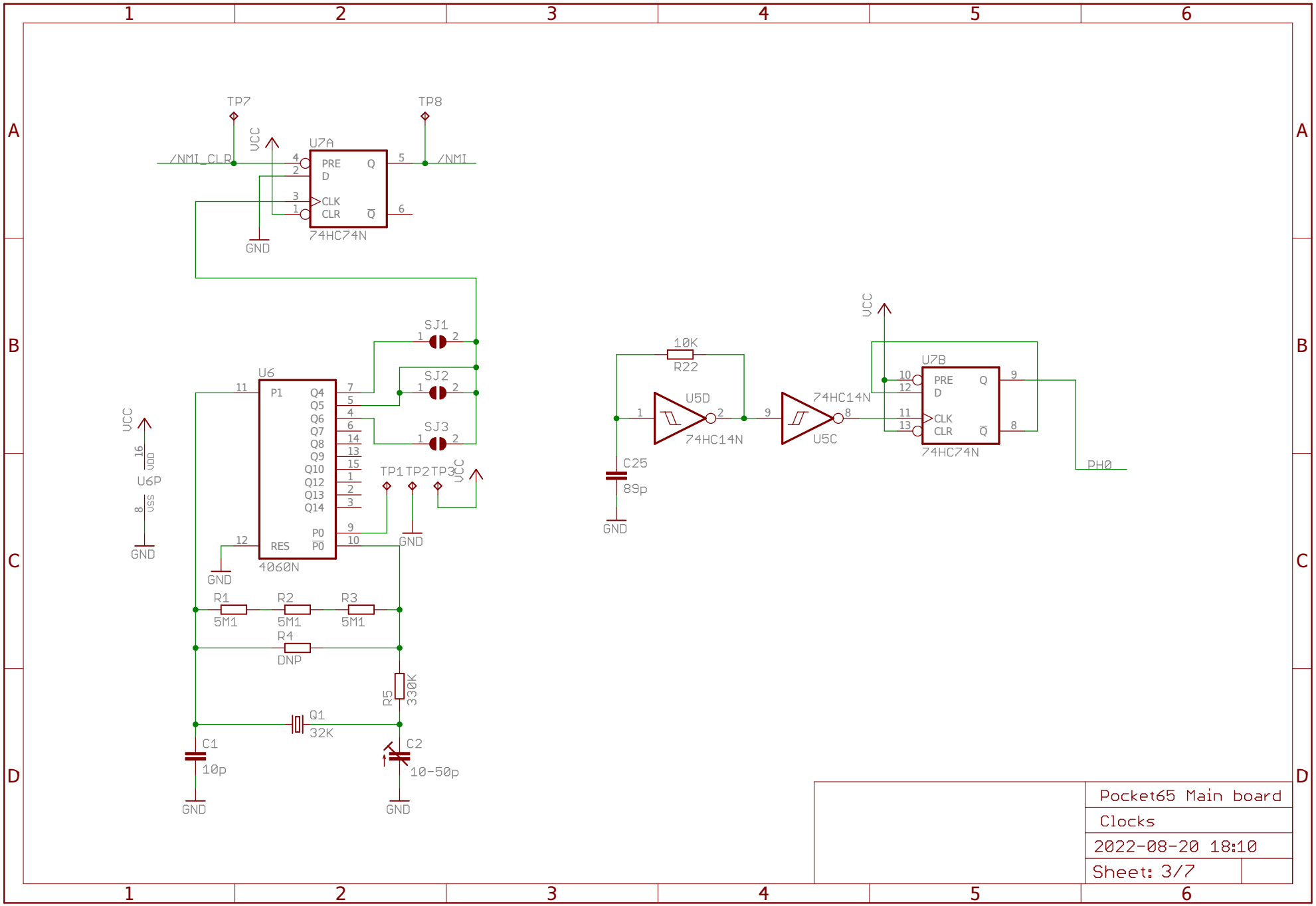
TP7
TP8
VCC
/NMI_CLR
U7A
PRE
D
Q
CLK
CLR
Q̄
/NMI
74HC74N
GND
SJ1
SJ2
SJ3
U6
P1
Q4
Q5
Q6
Q7
Q8
Q9
Q10
Q12
Q13
Q14
P0
RES
P0̄
4060N
U6P
VDD
VSS
TP1
TP2
TP3
R1
5M1
R2
5M1
R3
5M1
R4
DNP
R5
330K
Q1
32K
C1
10p
C2
10-50p
10K
R22
U5D
74HC14N
U5C
C25
89p
U7B
PH0
Pocket65 Main board
Clocks
2022-08-20 18:10
Sheet: 3/7

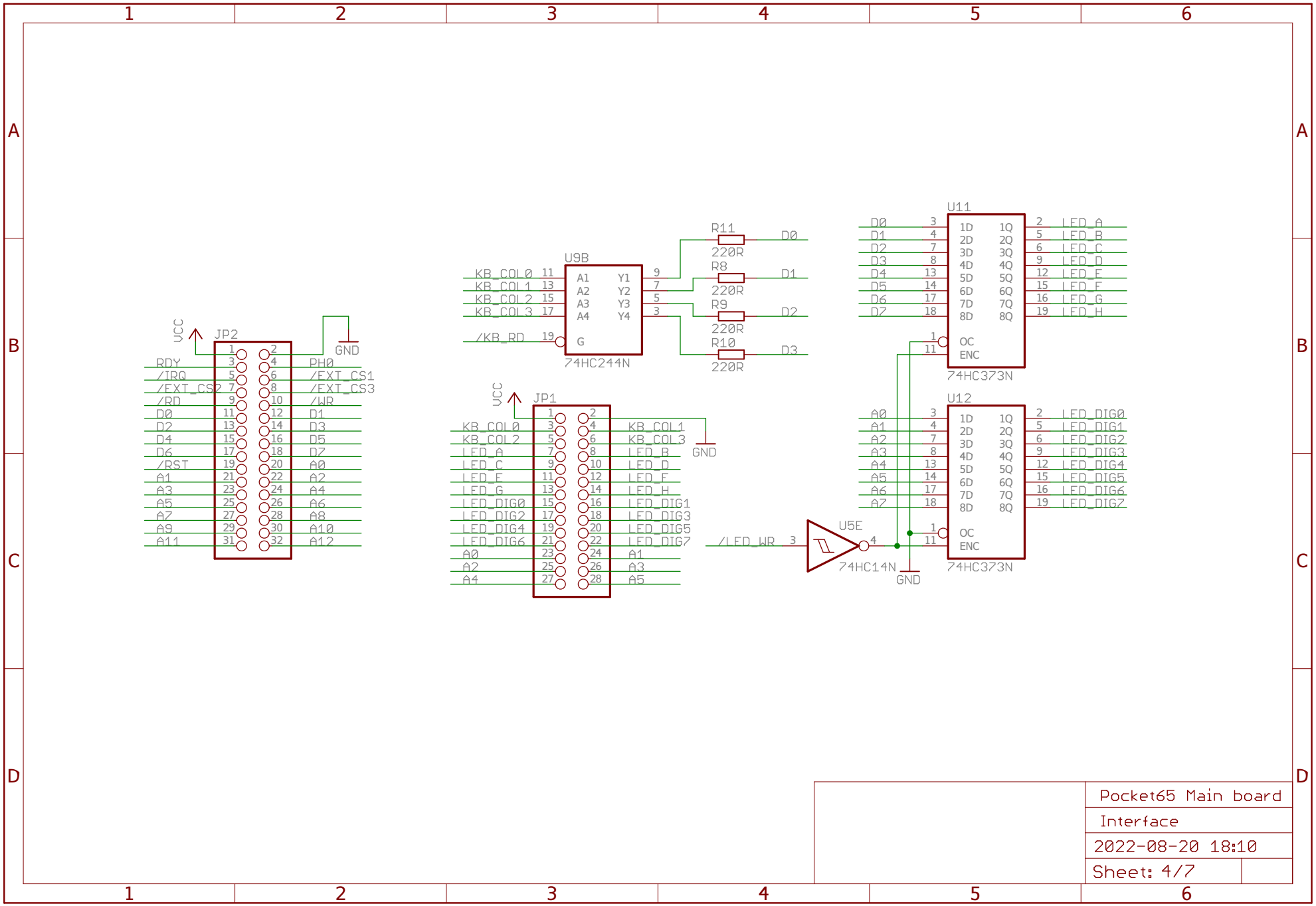

Pocket65 Main board	
Interface	
2022-08-20 18:10	
Sheet: 4/7	

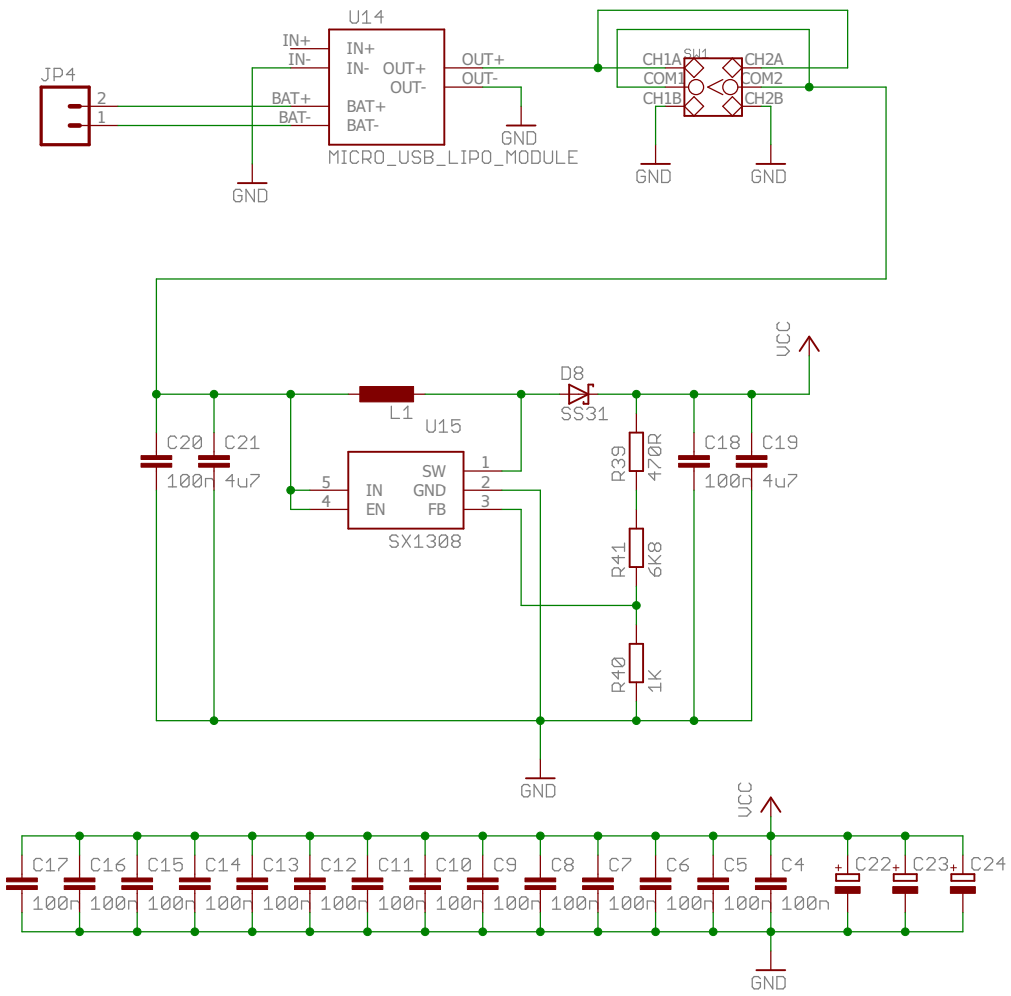

Pocket65 Main board	
Power	
2022-08-20 18:10	
Sheet: 5/7	

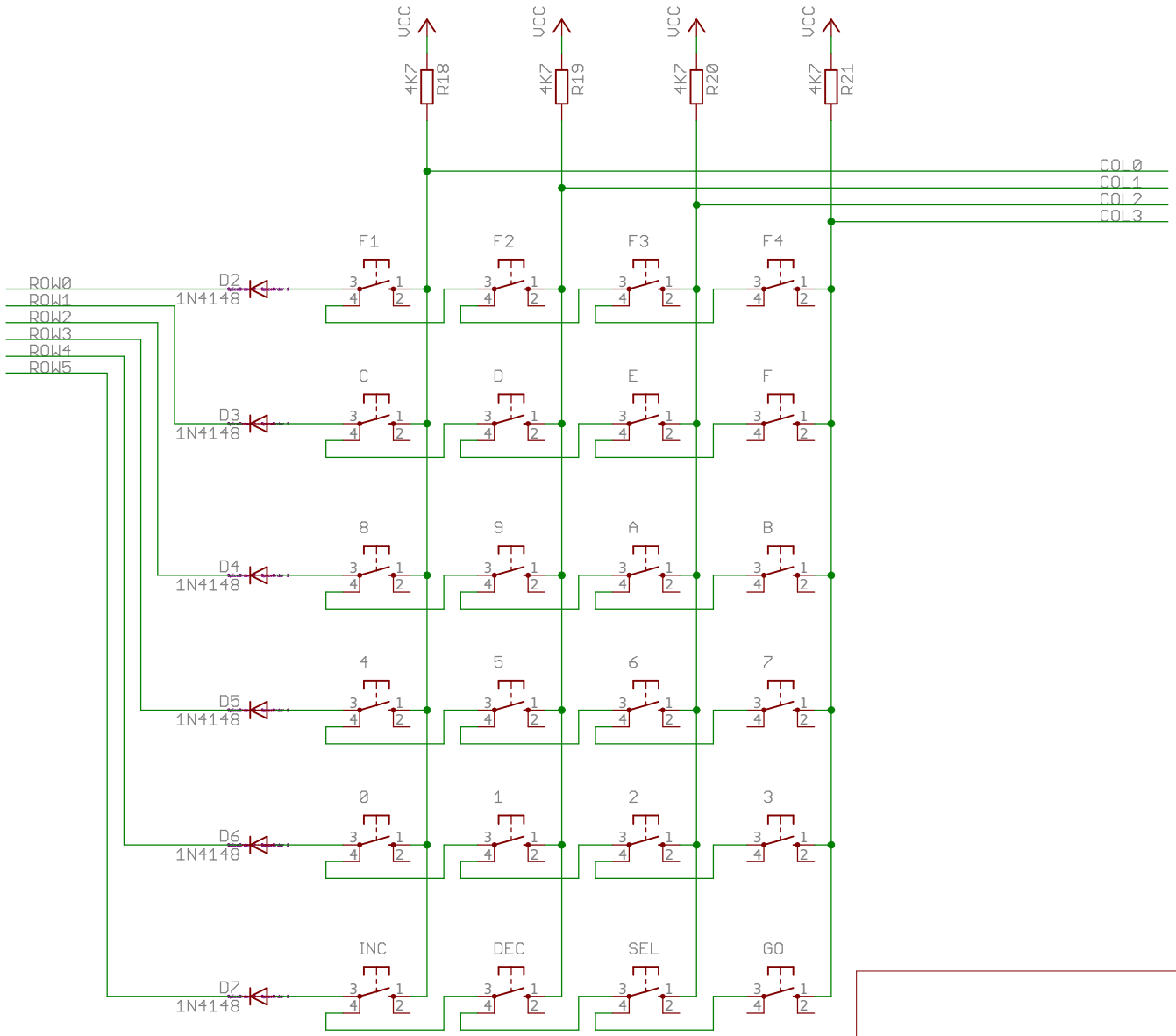

Pocket65 Interface	
Keyboard	
2022-08-20 18:10	
Sheet: 6/7	

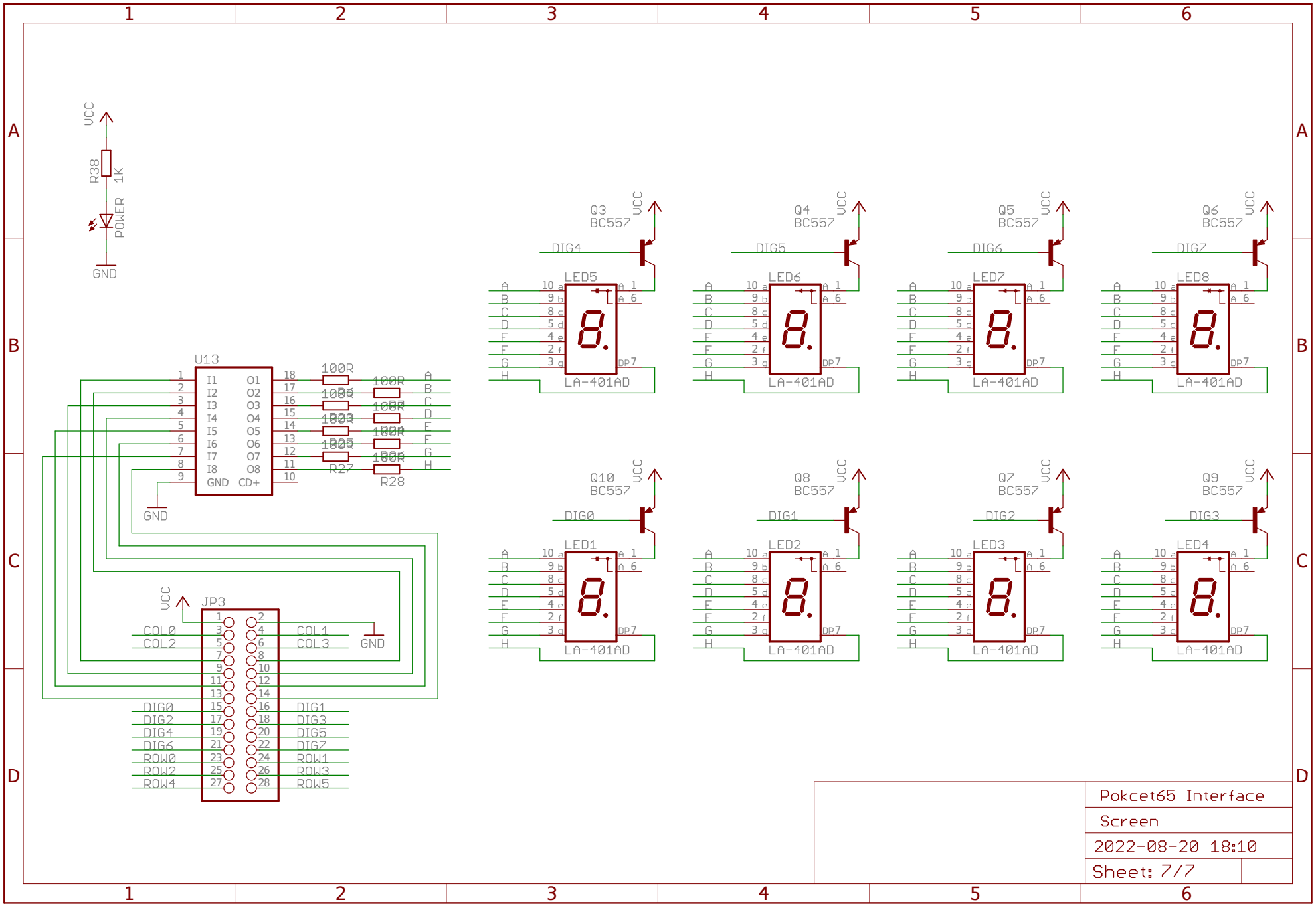
VCC
R38
1K
POWER
GND
U13
I1 I2 I3 I4 I5 I6 I7 I8 GND
O1 O2 O3 O4 O5 O6 O7 O8 CD+
100R
R27
R28
A B C D E F G H
Q3 BC557
Q4 BC557
Q5 BC557
Q6 BC557
Q10 BC557
Q8 BC557
Q7 BC557
Q9 BC557
DIG4
DIG5
DIG6
DIG7
DIG0
DIG1
DIG2
DIG3
LED5
LED6
LED7
LED8
LED1
LED2
LED3
LED4
LA-401AD
JP3
COL0
COL2
COL1
COL3
DIG0
DIG2
DIG4
DIG6
ROW0
ROW2
ROW4
DIG1
DIG3
DIG5
DIG7
ROW1
ROW3
ROW5
Pokcet65 Interface
Screen
2022-08-20 18:10
Sheet: 7/7