CUSTOMER PRINT SET | MFG SET

DRAWING NO	NO OF SHT	DESCRIPTION	OPTION NO/FILE DATE
———	-	MODULE REVISION	
D-UA-M8516-Ø-Ø	4	E + C BUS TRANSLATOR	
D-CS-M8516-Ø-TRØ1	1	E + C BUS TRANSLATOR	
D-CS-M8516-Ø-TRØ2	1	E + C BUS TRANSLATOR	
D-CS-M8516-Ø-TRØ3	1	E + C BUS TRANSLATOR	
D-CS-M8516-Ø-TRØ4	1	E + C BUS TRANSLATOR	
D-CS-M8516-Ø-TRØ5	1	E + C BUS TRANSLATOR	
D-CS-M8516-Ø-TRØ6	1	E + C BUS TRANSLATOR	
D-CS-M8516-Ø-RES	2	E + C BUS TRANSLATOR	
K-CO-M8516-Ø-4	1	E + C BUS TRANSLATOR (CALDEC DATA BASE)	
D-AH-M8516-Ø-5	4	E + C BUS TRANSLATOR	
B-MH-M8516-Ø-6	1	MODULE ECO HISTORY	
5010520	-	ETCH CIRCUIT BOARD	
P00-M8516-00		PROCESS SHEET (REF ONLY)	

REVISION CONTROL SHEET

REVISIONS

E	
D	
D	
D	
D	
D	
D	
D	
D	
C	
D	
D	RELAYOUT VERSION

CUSTOMER PRINT SET CODES

X = PRINT OF DOCUMENT INCLUDED IN PRINT SET
C = INCLUDES ALL PRINTS INDICATED ON DOCUMENT
S = CONFIDENTIAL AUTHORIZED SIGNATURE REQUIRED

ECO NO 00004

TITLE		SIZE	CODE	NUMBER	REV
E + C BUS TRANSLATOR	SHEET 3 OF 3	B	DD	M8516-Ø	D

MR

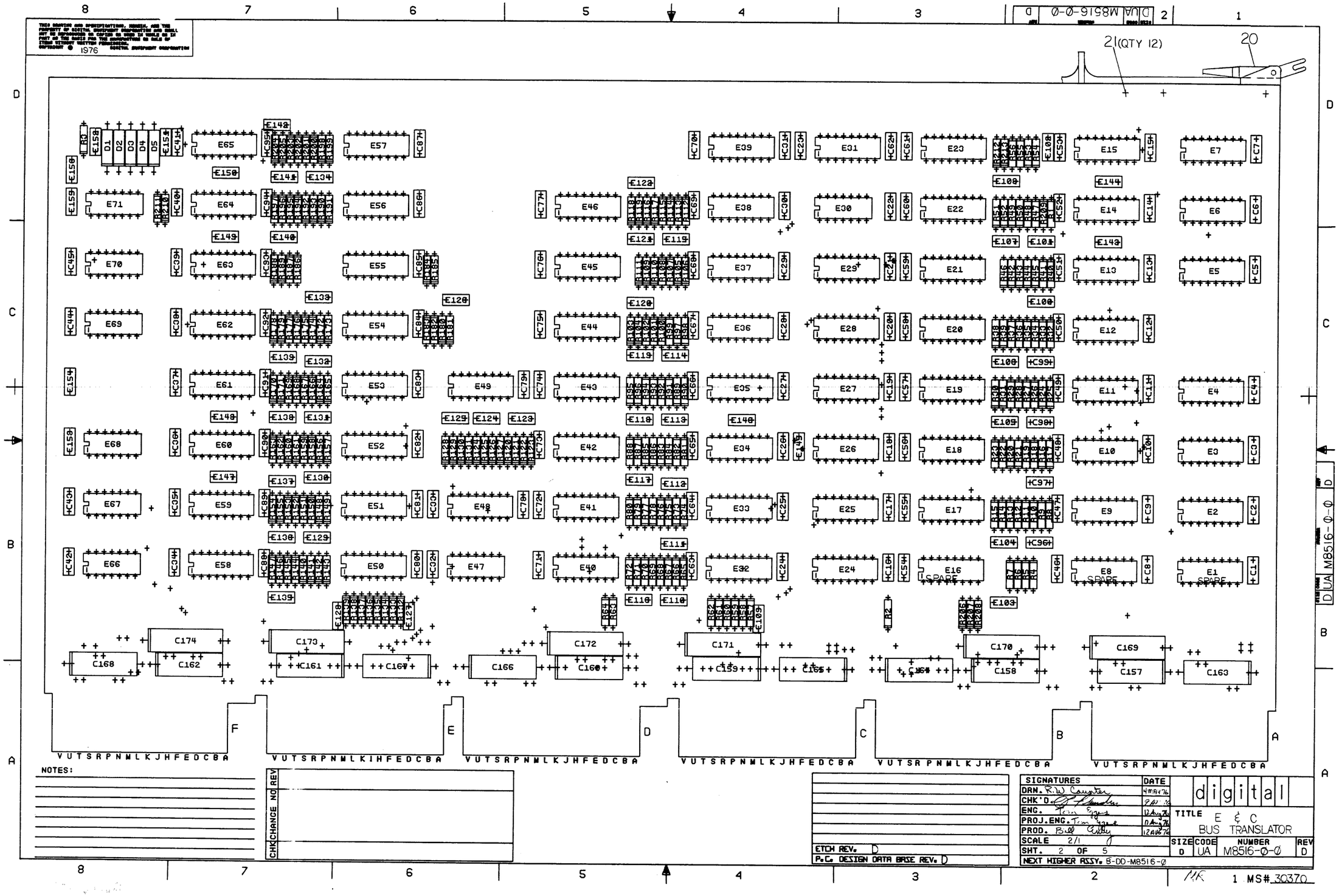

21 (QTY 12)
20
NOTES:
CHK CHANGE NO REV
ETCH REV. D
P.C. DESIGN DATA BASE REV. D
SIGNATURES
DATE
DRN. R.W. Caunter 4 MAY 76
CHK'D. 9 AUG 76
ENG. 12 Aug 76
PROJ. ENG. 12 Aug 76
PROD. 12 AUG 76
SCALE 2/1
SHT. 2 OF 5
NEXT HIGHER ASSY. B-DD-M8516-0
digital
TITLE E & C BUS TRANSLATOR
SIZE D
CODE UA
NUMBER M8516-0-0
REV D
1 MS# 30370

63

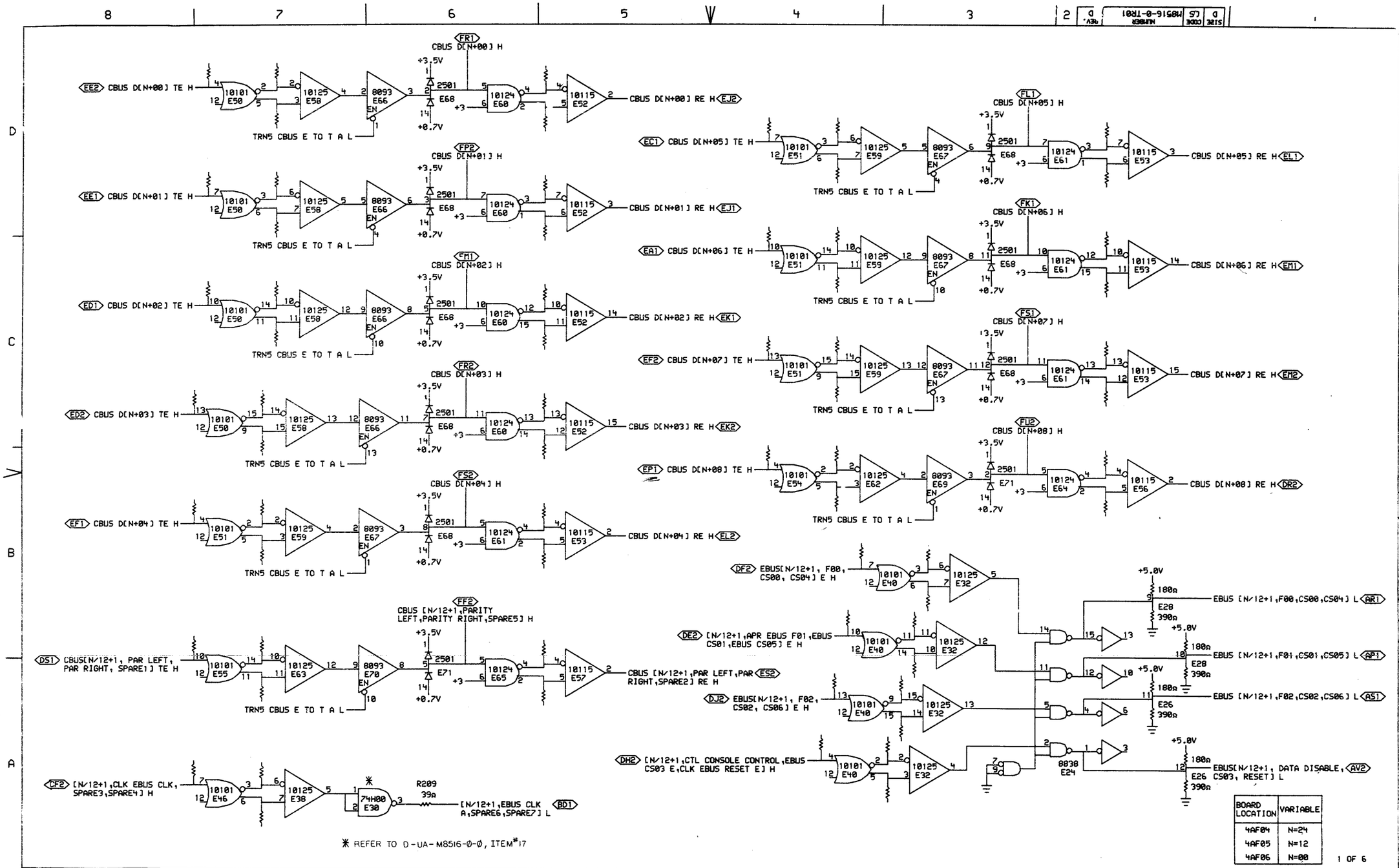

✱ REFER TO D-UA-M8516-0-0, ITEM#17

BOARD LOCATION	VARIABLE
4AF04	N=24
4AF05	N=12
4AF06	N=00

1 OF 6

"THIS DRAWING AND SPECIFICATIONS, HEREIN, ARE THE PROPERTY OF DIGITAL EQUIPMENT CORPORATION AND SHALL NOT BE REPRODUCED OR COPIED OR USED IN WHOLE OR IN PART AS THE BASIS FOR THE MANUFACTURE OR SALE OF ITEMS WITHOUT WRITTEN PERMISSION. COPYRIGHT © 1976, DIGITAL EQUIPMENT CORPORATION"

REVISIONS		
CHK	CHANGE NO.	REV
	00004	D
REVISED & REDRAWN		

digital

DRN. [signature] DATE 20-JUL-76 ENG. [signature] DATE 20Jul76
CHK. [signature] DATE 20Jul76 BOARD LOCATION: SHEET 1 OF 1

TRN1EX.DRW[4,121] 18-JUL-76 17:16 NEXT HIGHER ASSEMBLY: B-DD-M8516-0
FIRST USED ON OPTION/MODEL: KL10

TITLE: E & C BUS TRANSLATOR

SIZE	CODE	NUMBER	REV.
D	CS	M8516-0-TR01	D

MR

64

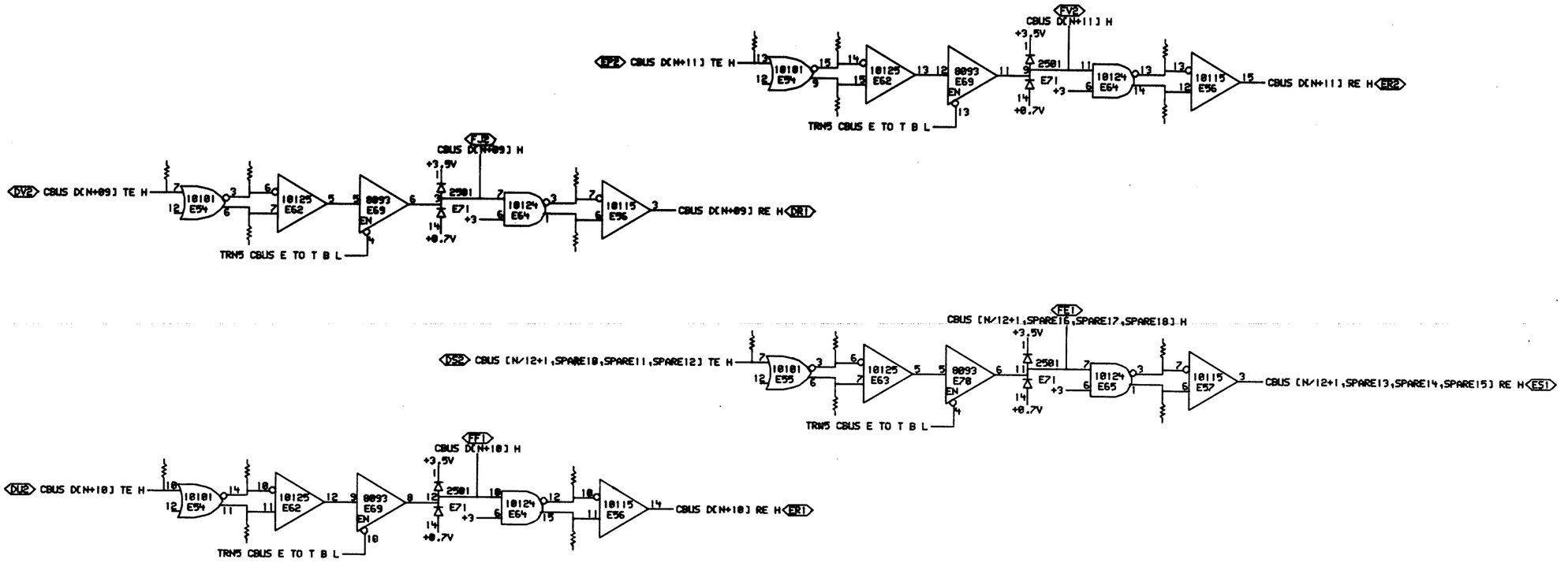

BOARD LOCATION	VARIABLE
4AF04	N=24
4AF05	N=12
4AF06	N=00

2 OF 6

"THIS DRAWING AND SPECIFICATIONS, HEREIN, ARE THE PROPERTY OF DIGITAL EQUIPMENT CORPORATION AND SHALL NOT BE REPRODUCED OR COPIED OR USED IN WHOLE OR IN PART AS THE BASIS FOR THE MANUFACTURE OR SALE OF ITEMS WITHOUT WRITTEN PERMISSION. COPYRIGHT © 1975, DIGITAL EQUIPMENT CORPORATION"

REVISIONS		
CHK	CHANGE NO.	REV
-	M8516-00003	C
	29-OCT-75	
	S. ZIA	
	10 31-75	

digital

DRN. [signature] DATE 22-SEP-75 ENG. [signature] DATE 9/23/75
CHK'D [signature] DATE 22 Sept 75 BOARD LOCATION: SHEET 1 OF 1
TRN2EX[4,121] 20-SEP-75 00:09 NEXT HIGHER ASSEMBLY: B-DD-M8516-0
FIRST USED ON OPTION/MODEL: KL10

TITLE: E & C BUS TRANSLATOR

SIZE	CODE	NUMBER	REV.
D	CS	M8516-0-TR02	C

M.P. 1

65

M8517 { SLOT 14 — N=12 & N=3Φ
SLOT 15 — N=Φ6 & N=24
SLOT 16 N=ΦΦ & N=18

M8516 { SLOT 4 — 24→35
SLOT 5 — 12→23
SLOT 6 — ΦΦ→11

8 7 6 5 4 3 2 1

SIZE D | CODE CS | NUMBER M8516-0-TR03 | REV. D

D

BR2 EBUS DEN+00 E H — 10101 E28 — 10125 E12
BS2 EBUS DEN+01 E H — 10101 E28 — 10125 E12
BJ2 EBUS DEN+02 E H — 10101 E28 — 10125 E12
TRN5 EBUS E TO T L
BF2 EBUS DEN+03 E H — 10101 E28 — 10125 E12
8838 E4

EBUS DEN+00 L AP2 — 10124 E11 — 10115 E19 — EBUS DEN+00 E H BR2
EBUS DEN+01 L AM2 — 10124 E11 — 10115 E19 — EBUS DEN+01 E H BS2
EBUS DEN+02 L AL2 — 10124 E11 — 10115 E19 — EBUS DEN+02 E H BJ2
EBUS DEN+03 L AK2 — 10124 E11 — 10115 E19 — EBUS DEN+03 E H BF2
TRN5 EBUS T TO E A H

CU2 EBUS DEN+08 E H — 10101 E41 — 10125 E33
CV2 EBUS DEN+09 E H — 10101 E41 — 10125 E33
DK2 EBUS DEN+10 E H — 10101 E41 — 10125 E33
TRN5 EBUS E TO T L
DD2 EBUS DEN+11 E H — 10101 E41 — 10125 E33
8838 E25

EBUS DEN+08 L AE2 — 10124 E34 — 10115 E42 — EBUS DEN+08 E H CU2
EBUS DEN+09 L AL1 — 10124 E34 — 10115 E42 — EBUS DEN+09 E H CV2
EBUS DEN+10 L AN1 — 10124 E34 — 10115 E42 — EBUS DEN+10 E H DK2
EBUS DEN+11 L AM1 — 10124 E34 — 10115 E42 — EBUS DEN+11 E H DD2
TRN5 EBUS T TO E C H

BM2 EBUS DEN+04 E H — 10101 E18 — 10125 E10
BP2 EBUS DEN+05 E H — 10101 E18 — 10125 E10
BL2 EBUS DEN+06 E H — 10101 E18 — 10125 E10
TRN5 EBUS E TO T L
BK2 EBUS DEN+07 E H — 10101 E18 — 10125 E10
8838 E3

EBUS DEN+04 L AJ2 — 10124 E9 — 10115 E17 — EBUS DEN+04 E H BM2
EBUS DEN+05 L AH2 — 10124 E9 — 10115 E17 — EBUS DEN+05 E H BP2
EBUS DEN+06 L AF2 — 10124 E9 — 10115 E17 — EBUS DEN+06 E H BL2
EBUS DEN+07 L AD2 — 10124 E9 — 10115 E17 — EBUS DEN+07 E H BK2
TRN5 EBUS T TO E B H

AP2 EBUS DEN+00 L — 180Ω E2 390Ω — +5.0V
AK2 EBUS DEN+03 L — 180Ω E2 390Ω — +5.0V
AF2 EBUS DEN+06 L — 180Ω E2 390Ω — +5.0V
AL1 EBUS DEN+09 L — 180Ω E26 390Ω — +5.0V
AJ2 EBUS DEN+04 L — 180Ω E2 390Ω — +5.0V
AD2 EBUS DEN+07 L — 180Ω E2 390Ω — +5.0V
AN1 EBUS DEN+10 L — 180Ω E26 390Ω — +5.0V
AM2 EBUS DEN+01 L — 180Ω E2 390Ω — +5.0V
AH2 EBUS DEN+05 L — 180Ω E2 390Ω — +5.0V
AE2 EBUS DEN+08 L — 180Ω E2 390Ω — +5.0V
AM1 EBUS DEN+11 L — 180Ω E26 390Ω — +5.0V
AL2 EBUS DEN+02 L — 180Ω E2 390Ω — +5.0V
AR2 EBUS[N/12+1, PARITY, PARITY ACTIVE, SPARE22] L — 180Ω E7 390Ω — +5.0V

BOARD LOCATION	VARIABLE
4AF04	N=24
4AF05	N=12
4AF06	N=00

BE2 [N/12+1,CTL EBUS PARITY OUT,EBUS SPARE19, EBUS SPARE20] E H — 10101 E21 — 10125 E13 — 8838 E5 — 10124 E14 — 10115 E22 — EBUS[N/12+1, PARITY, PARITY ACTIVE, SPARE22] L AR2
[N/12+1,EBUS PARITY,EBUS PARITY ACTIVE,EBUS SPARE24] E H BD2

3 OF 6

REV. D | NUMBER M8516-0-TR03 | CODE CS | SIZE D

B

A

*THIS DRAWING & SPECIFICATIONS, HEREIN, ARE THE PROPERTY OF DIGITAL EQUIPMENT CORPORATION AND SHALL NOT BE REPRODUCED OR COPIED OR USED IN WHOLE OR IN PART AS THE BASIS FOR THE MANUFACTURE OR SALE OF ITEMS WITHOUT WRITTEN PERMISSION.
COPYRIGHT © 1976, DIGITAL EQUIPMENT CORPORATION*

REVISIONS		
CHK	CHANGE NO.	REV
JM	00004	D
	REVISED & REDRAWN	

digital — DRN. J. Stanley — DATE 19-JUL-76 — ENGR — DATE 20-Jul-76 — BOARD LOCATION: — SHEET 1 OF 1
CHK — DATE 20-Jul-76
TRN3EX,DRW 4,121] 18-JUL-76 17:14 — NEXT HIGHER ASSEMBLY: B-DD-M8516-0
FIRST USED ON OPTION/MODEL: KL10

TITLE: E & C BUS TRANSLATOR

SIZE	CODE	NUMBER	REV.
D	CS	M8516-0-TR03	D

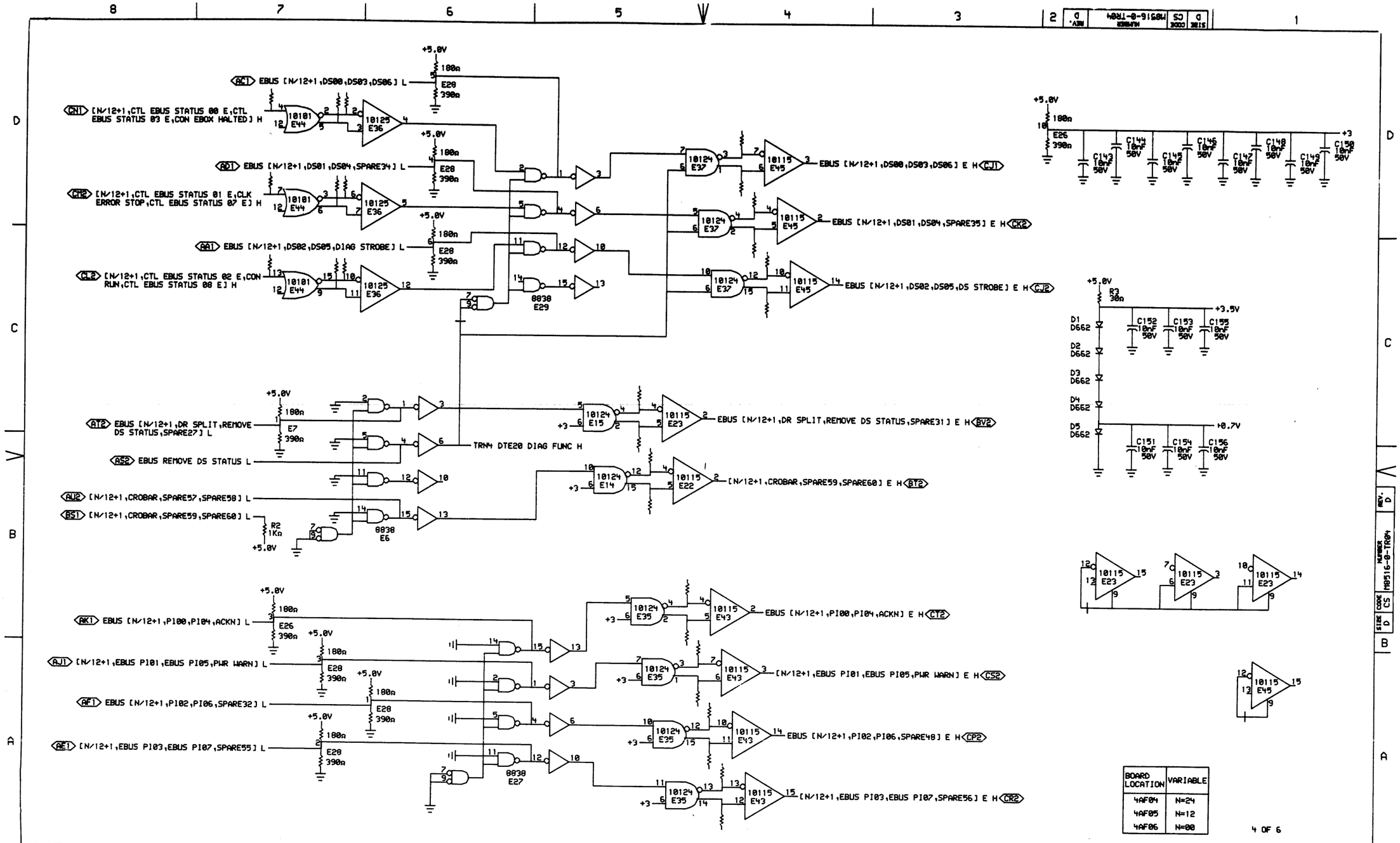

BOARD LOCATION	VARIABLE
4AF04	N=24
4AF05	N=12
4AF06	N=00

4 OF 6

"THIS DRAWING AND SPECIFICATIONS, HEREIN, ARE THE PROPERTY OF DIGITAL EQUIPMENT CORPORATION AND SHALL NOT BE REPRODUCED OR COPIED OR USED IN WHOLE OR IN PART AS THE BASIS FOR THE MANUFACTURE OR SALE OF ITEMS WITHOUT WRITTEN PERMISSION. COPYRIGHT © 1976, DIGITAL EQUIPMENT CORPORATION"

REVISIONS		
CHK	CHANGE NO.	REV
	00004	D
REVISED & REDRAWN		

digital

DRN. DATE 19-JUL-76 ENG. DATE 20 Jul 76
CHK. DATE 20 Jul 76 BOARD LOCATION: SHEET 1 OF 1
TRN4EX.DRW[4,121] 18-JUL-76 17:18 NEXT HIGHER ASSEMBLY: B-DD-M8516-0
FIRST USED ON OPTION/MODEL: KL10

TITLE: E & C BUS TRANSLATOR

SIZE	CODE	NUMBER	REV.
D	CS	M8516-0-TR04	D

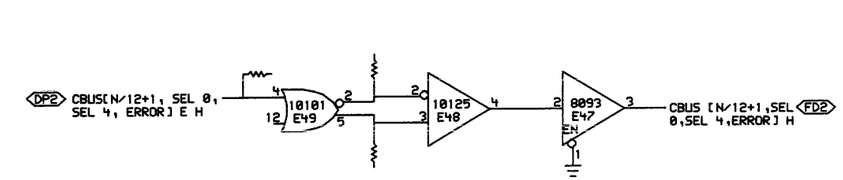

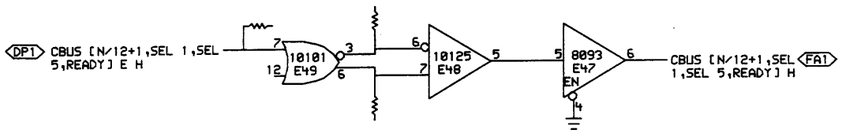

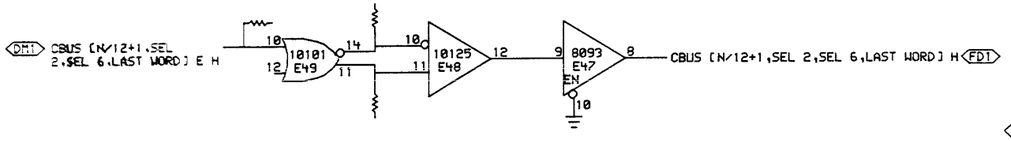

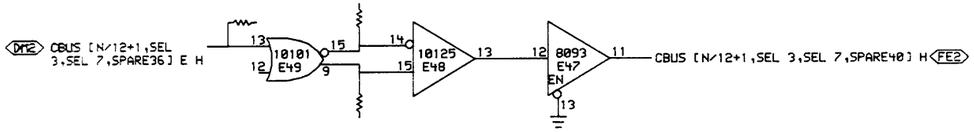

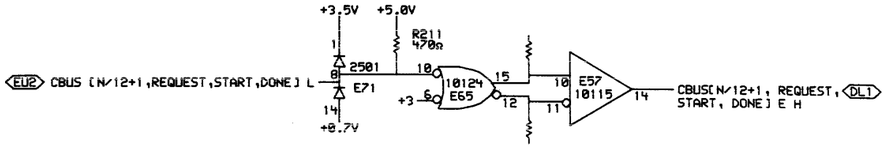

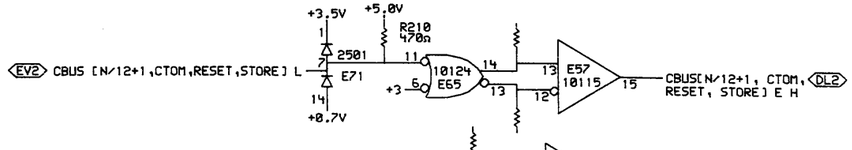

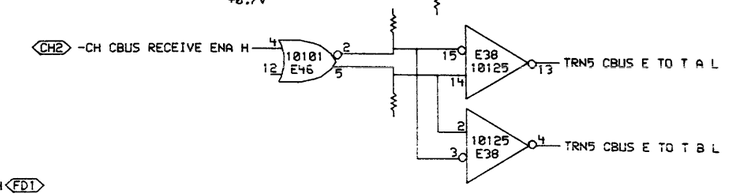

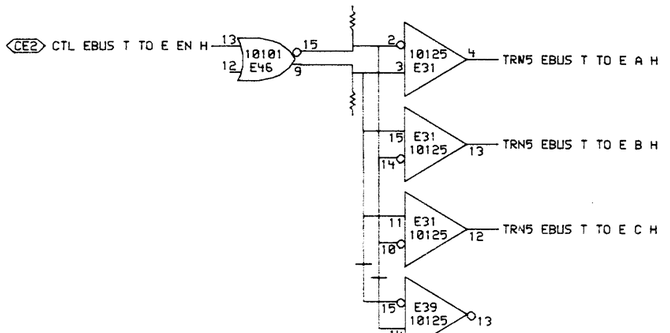

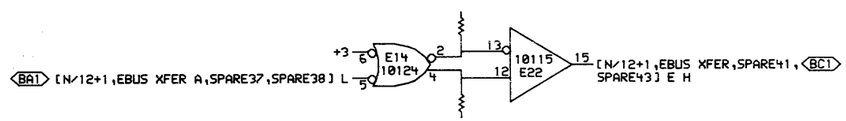

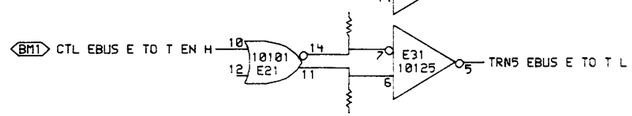

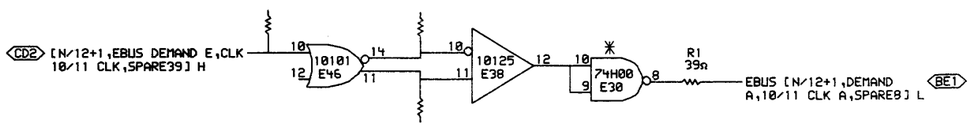

✳ REF TO D-UA-M8516-0-0, ITEM ✳17

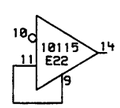

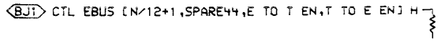

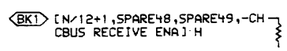

BOARD LOCATION	VARIABLE
4AF04	N=24
4AF05	N=12
4AF06	N=00

5 OF 6

"THIS DRAWING AND SPECIFICATIONS, HEREIN, ARE THE PROPERTY OF DIGITAL EQUIPMENT CORPORATION A D SHALL NOT BE REPRODUCED OR COPIED OR USED IN WHOLE OR IN PART AS THE BASIS FOR THE MANUFACTURE OR SALE OF ITEMS WITHOUT WRITTEN PERMISSION.
COPYRIGHT © 1976, DIGITAL EQUIPMENT CORPORATION"

REVISIONS		
CHK	CHANGE NO.	REV
	C0004	D
	REVISED & REDRAWN	

digital

DRN: [illegible] DATE 19-JUL-76
CHK: [illegible] DATE 20-JUL-76
ENG: [illegible] DATE 20-JUL-76
BOARD LOCATION:
SHEET 1 OF 1
TRN5EX.DRW[4,121] 18-JUL-76 17:20
NEXT HIGHER ASSEMBLY: B-DD-M8516-0
FIRST USED ON OPTION/MODEL: KL10

TITLE: E & C BUS TRANSLATOR

SIZE	CODE	NUMBER	REV.
D	CS	M8516-0-TR05	D

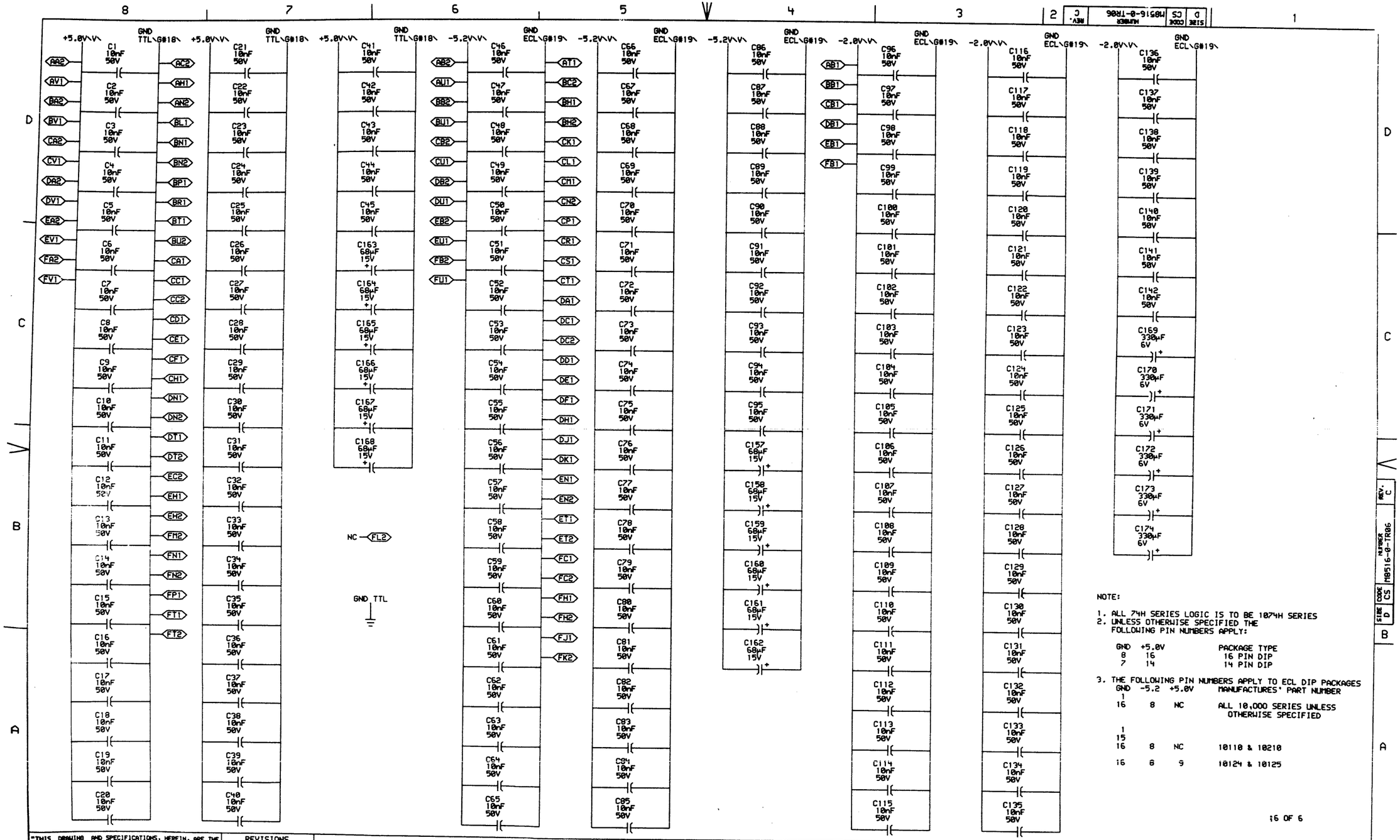

NOTE:

1. ALL 74H SERIES LOGIC IS TO BE 1074H SERIES
2. UNLESS OTHERWISE SPECIFIED THE FOLLOWING PIN NUMBERS APPLY:

GND	+5.0V	PACKAGE TYPE
8	16	16 PIN DIP
7	14	14 PIN DIP

3. THE FOLLOWING PIN NUMBERS APPLY TO ECL DIP PACKAGES

GND	-5.2	+5.0V	MANUFACTURES' PART NUMBER
1			
16	8	NC	ALL 10,000 SERIES UNLESS OTHERWISE SPECIFIED
1			
15			
16	8	NC	10110 & 10210
16	8	9	10124 & 10125

;6 OF 6

"THIS DRAWING AND SPECIFICATIONS, HEREIN, ARE THE PROPERTY OF DIGITAL EQUIPMENT CORPORATION AND SHALL NOT BE REPRODUCED OR COPIED OR USED IN WHOLE OR IN PART A THE BASIS FOR THE MA UFACTURE OR SALE OF ITEMS WITHOUT WRITTEN PERMISSION. COPYRIGHT © 1976, DIGITAL EQUIPMENT CORPORATION"

REVISIONS		
CHK	CHANGE NO.	REV
	00004	D
REVISED & REDRAWN		

digital

DRN. S. Toomby DATE 19-JUL-76 ENG. F. Eggers DATE 20 Jul 76
CHK'D F. Eggers DATE 20 Jul 76 BOARD LOCATION: SHEET 1 OF 1
TRN6EX.DRW[4,121] 18-JUL-76 17:21 NEXT HIGHER ASSEMBLY: B-DD-M8516-0
FIRST USED ON OPTION/MODEL: KL10

TITLE: E & C BUS TRANS POWER, GND, CAPS

SIZE	CODE	NUMBER	REV.
D	CS	M8516-0-TR06	C

69

RESISTOR LOC(PIN)	SHOWN DRW#	ON REF	VALUE	TERMINATES SIGNAL
R31(1)	TR03	C5	68Ω	%E11(1)
R29(1)	TR03	D5	68Ω	%E11(12)
R26(1)	TR03	D5	68Ω	%E11(13)
R27(1)	TR03	D5	68Ω	%E11(14)
R28(1)	TR03	D5	68Ω	%E11(15)
R24(1)	TR03	C5	68Ω	%E11(2)
R30(1)	TR03	C5	68Ω	%E11(3)
R25(1)	TR03	C5	68Ω	%E11(4)
R43(1)	TR03	A2	68Ω	%E14(1)
R51(1)	TR04	B5	68Ω	%E14(12)
R52(1)	TR04	B5	68Ω	%E14(15)
R47(1)	TR05	B6	68Ω	%E14(2)
R50(1)	TR03	A2	68Ω	%E14(3)
R48(1)	TR05	B6	68Ω	%E14(4)
R53(1)	TR04	C5	68Ω	%E15(2)
R54(1)	TR04	C5	68Ω	%E15(4)
R19(1)	TR03	B7	68Ω	%E18(11)
R18(1)	TR03	B7	68Ω	%E18(14)
R23(1)	TR03	B7	68Ω	%E18(15)
R20(1)	TR03	B7	68Ω	%E18(2)
R17(1)	TR03	A7	68Ω	%E18(3)
R21(1)	TR03	A7	68Ω	%E18(5)
R16(1)	TR03	A7	68Ω	%E18(6)
R22(1)	TR03	B7	68Ω	%E18(9)
R34(1)	TR03	D7	68Ω	%E20(11)
R35(1)	TR03	D7	68Ω	%E20(14)
R32(1)	TR03	D7	68Ω	%E20(15)
R36(1)	TR03	C7	68Ω	%E20(2)
R38(1)	TR03	C7	68Ω	%E20(3)
R37(1)	TR03	C7	68Ω	%E20(5)
R39(1)	TR03	C7	68Ω	%E20(6)
R33(1)	TR03	D7	68Ω	%E20(9)
R213(1)	TR05	B3	68Ω	%E21(11)
R212(1)	TR05	B3	68Ω	%E21(14)
R40(1)	TR03	A4	68Ω	%E21(3)
R41(1)	TR03	A4	68Ω	%E21(6)
R84(1)	TR03	B2	68Ω	%E34(1)
R88(1)	TR03	D2	68Ω	%E34(12)
R81(1)	TR03	D2	68Ω	%E34(13)
R82(1)	TR03	C2	68Ω	%E34(14)

RESISTOR LOC(PIN)	SHOWN DRW#	ON REF	VALUE	TERMINATES SIGNAL
R87(1)	TR03	D2	68Ω	%E34(15)
R86(1)	TR03	C2	68Ω	%E34(2)
R83(1)	TR03	C2	68Ω	%E34(3)
R85(1)	TR03	C2	68Ω	%E34(4)
R96(1)	TR04	A4	68Ω	%E35(1)
R91(1)	TR04	A4	68Ω	%E35(12)
R93(1)	TR04	A4	68Ω	%E35(13)
R94(1)	TR04	A4	68Ω	%E35(14)
R92(1)	TR04	A4	68Ω	%E35(15)
R89(1)	TR04	B5	68Ω	%E35(2)
R95(1)	TR04	A4	68Ω	%E35(3)
R90(1)	TR04	B5	68Ω	%E35(4)
R109(1)	TR04	D4	68Ω	%E37(1)
R108(1)	TR04	C4	68Ω	%E37(12)
R107(1)	TR04	C4	68Ω	%E37(15)
R105(1)	TR04	C4	68Ω	%E37(2)
R111(1)	TR04	D4	68Ω	%E37(3)
R106(1)	TR04	D4	68Ω	%E37(4)
R58(1)	TR01	B3	68Ω	%E40(11)
R57(1)	TR01	A3	68Ω	%E40(14)
R66(1)	TR01	A3	68Ω	%E40(15)
R61(1)	TR01	A3	68Ω	%E40(2)
R59(1)	TR01	B3	68Ω	%E40(3)
R62(1)	TR01	A3	68Ω	%E40(5)
R60(1)	TR01	B3	68Ω	%E40(6)
R65(1)	TR01	A3	68Ω	%E40(9)
R79(1)	TR03	D4	68Ω	%E41(11)
R80(1)	TR03	D4	68Ω	%E41(14)
R75(1)	TR03	D4	68Ω	%E41(15)
R74(1)	TR03	C4	68Ω	%E41(2)
R77(1)	TR03	C4	68Ω	%E41(3)
R73(1)	TR03	C4	68Ω	%E41(5)
R78(1)	TR03	C4	68Ω	%E41(6)
R76(1)	TR03	C4	68Ω	%E41(9)
R102(1)	TR04	C7	68Ω	%E44(15)
R100(1)	TR04	D7	68Ω	%E44(2)
R97(1)	TR04	D7	68Ω	%E44(3)
R99(1)	TR04	D7	68Ω	%E44(5)
R98(1)	TR04	D7	68Ω	%E44(6)
R101(1)	TR04	C7	68Ω	%E44(9)

RESISTOR LOC(PIN)	SHOWN DRW#	ON REF	VALUE	TERMINATES SIGNAL
R114(1)	TR05	A6	68Ω	%E46(11)
R115(1)	TR05	A6	68Ω	%E46(14)
R56(1)	TR05	C3	68Ω	%E46(15)
R112(1)	TR05	C3	68Ω	%E46(2)
R116(1)	TR01	A7	68Ω	%E46(3)
R113(1)	TR05	C3	68Ω	%E46(5)
R117(1)	TR01	A7	68Ω	%E46(6)
R55(1)	TR05	C3	68Ω	%E46(9)
R122(1)	TR05	C7	68Ω	%E49(11)
R123(1)	TR05	C7	68Ω	%E49(14)
R128(1)	TR05	B7	68Ω	%E49(15)
R130(1)	TR05	D7	68Ω	%E49(2)
R120(1)	TR05	D7	68Ω	%E49(3)
R131(1)	TR05	D7	68Ω	%E49(5)
R121(1)	TR05	C7	68Ω	%E49(6)
R129(1)	TR05	B7	68Ω	%E49(9)
R144(1)	TR01	C7	68Ω	%E50(11)
R145(1)	TR01	C7	68Ω	%E50(14)
R146(1)	TR01	C7	68Ω	%E50(15)
R142(1)	TR01	D7	68Ω	%E50(2)
R141(1)	TR01	D7	68Ω	%E50(3)
R143(1)	TR01	D7	68Ω	%E50(5)
R140(1)	TR01	D7	68Ω	%E50(6)
R147(1)	TR01	C7	68Ω	%E50(9)
R150(1)	TR01	C4	68Ω	%E51(11)
R151(1)	TR01	C4	68Ω	%E51(14)
R152(1)	TR01	C4	68Ω	%E51(15)
R148(1)	TR01	B7	68Ω	%E51(2)
R155(1)	TR01	D4	68Ω	%E51(3)
R149(1)	TR01	B7	68Ω	%E51(5)
R154(1)	TR01	D4	68Ω	%E51(6)
R153(1)	TR01	C4	68Ω	%E51(9)
R177(1)	TR02	B7	68Ω	%E54(11)
R176(1)	TR02	B7	68Ω	%E54(14)
R175(1)	TR02	D4	68Ω	%E54(15)
R179(1)	TR01	B4	68Ω	%E54(2)
R172(1)	TR02	C7	68Ω	%E54(3)
R178(1)	TR01	B4	68Ω	%E54(5)
R173(1)	TR02	C7	68Ω	%E54(6)
R174(1)	TR02	D4	68Ω	%E54(9)

RESISTOR LOC(PIN)	SHOWN DRW#	ON REF	VALUE	TERMINATES SIGNAL
R187(1)	TR01	A7	68Ω	%E55(11)
R186(1)	TR01	A7	68Ω	%E55(14)
R189(1)	TR02	C4	68Ω	%E55(3)
R188(1)	TR02	B4	68Ω	%E55(6)
R160(1)	TR01	D5	68Ω	%E60(1)
R159(1)	TR01	C5	68Ω	%E60(12)
R162(1)	TR01	C5	68Ω	%E60(13)
R163(1)	TR01	C5	68Ω	%E60(14)
R158(1)	TR01	C5	68Ω	%E60(15)
R157(1)	TR01	D5	68Ω	%E60(2)
R161(1)	TR01	D5	68Ω	%E60(3)
R156(1)	TR01	D5	68Ω	%E60(4)
R170(1)	TR01	D2	68Ω	%E61(1)
R168(1)	TR01	C2	68Ω	%E61(12)
R167(1)	TR01	C2	68Ω	%E61(13)
R166(1)	TR01	C2	68Ω	%E61(14)
R169(1)	TR01	C2	68Ω	%E61(15)
R165(1)	TR01	B5	68Ω	%E61(2)
R171(1)	TR01	D2	68Ω	%E61(3)
R164(1)	TR01	B5	68Ω	%E61(4)
R191(1)	TR02	C5	68Ω	%E64(1)
R195(1)	TR02	B5	68Ω	%E64(12)
R196(1)	TR02	D3	68Ω	%E64(13)
R197(1)	TR02	D3	68Ω	%E64(14)
R194(1)	TR02	B5	68Ω	%E64(15)
R192(1)	TR01	B2	68Ω	%E64(2)
R190(1)	TR02	C5	68Ω	%E64(3)
R193(1)	TR01	B2	68Ω	%E64(4)
R199(1)	TR02	B3	68Ω	%E65(1)
R202(1)	TR05	D3	68Ω	%E65(12)
R201(1)	TR05	C3	68Ω	%E65(13)
R200(1)	TR05	D3	68Ω	%E65(14)
R203(1)	TR05	D3	68Ω	%E65(15)
R204(1)	TR01	A5	68Ω	%E65(2)
R198(1)	TR02	C3	68Ω	%E65(3)
R205(1)	TR01	A5	68Ω	%E65(4)
R6(1)	TR03	A5	68Ω	%E9(1)
R11(1)	TR03	B5	68Ω	%E9(12)
R8(1)	TR03	B5	68Ω	%E9(13)
R9(1)	TR03	B5	68Ω	%E9(14)

NOTE:

1. ALL TERMINATORS HAVE PIN TWO CONNECTED TO -2.0V AND ARE 5% 1/4WATT UNLESS OTHERWISE SPECIFIED
2. ENTRIES ARE SORTED BY SIGNAL NAME
3. % INDICATES OUTPUT OF DIP LOC AND () INDICATES PIN NUMBER

"THIS DRAWING AND SPECIFICATIONS, HEREIN, ARE THE PROPERTY OF DIGITAL EQUIPMENT CORPORATION AND SHALL NOT BE REPRODUCED OR COPIED OR USED IN WHOLE OR IN PART AS THE BASIS FOR THE MANUFACTURE OR SALE OF ITEMS WITHOUT WRITTEN PERMISSION.
COPYRIGHT © 1976, DIGITAL EQUIPMENT CORPORATION"

REVISIONS

CHK	CHANGE NO.	REV
	00004	D
	REVISED & REDRAWN	

digital	DRN. C Smith	DATE 18-JUL-76	ENG.	DATE 20 JUL 76
	CHK'D	DATE 20 JUL 76	BOARD LOCATION:	
M8516.RVD[4,427] 18-JUL-76 17:50			SHEET 1 OF 2	
FIRST USED ON OPTION/MODEL: KL10			NEXT HIGHER ASSEMBLY: B-DD-M8516-0	

TITLE: E & C BUS TRANS TERMINATORS

SIZE	CODE	NUMBER	REV.
D	CS	M8516-0-RES	D

RESISTOR LOC(PIN)	SHOWN ON DRAW#	REF	VALUE	TERMINATES SIGNAL
R10(1)	TR03	B5	68Ω	%E9(15)
R5(1)	TR03	A5	68Ω	%E9(2)
R7(1)	TR03	A5	68Ω	%E9(3)
R4(1)	TR03	B5	68Ω	%E9(4)
R138(1)	TR01	D7	68Ω	CBUS D[N+00] TE H
R137(1)	TR01	D7	68Ω	CBUS D[N+01] TE H
R135(1)	TR01	C7	68Ω	CBUS D[N+02] TE H
R134(1)	TR01	C7	68Ω	CBUS D[N+03] TE H
R136(1)	TR01	B7	68Ω	CBUS D[N+04] TE H
R133(1)	TR01	D4	68Ω	CBUS D[N+05] TE H
R132(1)	TR01	C4	68Ω	CBUS D[N+06] TE H
R139(1)	TR01	C4	68Ω	CBUS D[N+07] TE H
R101(1)	TR01	B4	68Ω	CBUS D[N+08] TE H
R100(1)	TR02	C7	68Ω	CBUS D[N+09] TE H
R103(1)	TR02	B7	68Ω	CBUS D[N+10] TE H
R102(1)	TR02	D5	68Ω	CBUS D[N+11] TE H
R125(1)	TR05	D7	68Ω	CBUS [N/12+1,SEL 1,SEL 5,READY] E H
R127(1)	TR05	C7	68Ω	CBUS [N/12+1,SEL 2,SEL 6,LAST WORD] E H
R126(1)	TR05	B7	68Ω	CBUS [N/12+1,SEL 3,SEL 7,SPARE36] E H
R104(1)	TR02	C5	68Ω	CBUS [N/12+1,SPARE10,SPARE11,SPARE12] TE H
R105(1)	TR01	A7	68Ω	CBUS[N/12+1, PAR LEFT, PAR RIGHT, SPARE1] TE H
R124(1)	TR05	D7	68Ω	CBUS[N/12+1, SEL 0, SEL 4, ERROR] E H
R207(1)	TR05	A2	68Ω	CTL EBUS [N/12+1,SPARE44,E TO T EN,T TO E EN] H
R208(1)	TR05	A2	68Ω	CTL EBUS [N/12+1,SPARE46,SPARE47,SPARE48] H
R42(1)	TR03	D8	68Ω	EBUS D[N+00] E H
R46(1)	TR03	D8	68Ω	EBUS D[N+01] E H
R43(1)	TR03	C8	68Ω	EBUS D[N+02] E H
R44(1)	TR03	C8	68Ω	EBUS D[N+03] E H
R15(1)	TR03	B8	68Ω	EBUS D[N+04] E H
R14(1)	TR03	B8	68Ω	EBUS D[N+05] E H
R13(1)	TR03	B8	68Ω	EBUS D[N+06] E H
R12(1)	TR03	A8	68Ω	EBUS D[N+07] E H
R71(1)	TR03	D4	68Ω	EBUS D[N+08] E H
R72(1)	TR03	D4	68Ω	EBUS D[N+09] E H
R68(1)	TR03	C4	68Ω	EBUS D[N+10] E H
R67(1)	TR03	C4	68Ω	EBUS D[N+11] E H
R63(1)	TR01	B4	68Ω	EBUS[N/12+1, F00, CS00, CS04] E H
R69(1)	TR01	A4	68Ω	EBUS[N/12+1, F02, CS02, CS06] E H
R70(1)	TR01	B4	68Ω	[N/12+1,APR EBUS F01,EBUS CS01,EBUS CS05] E H
R110(1)	TR01	A7	68Ω	[N/12+1,CLK EBUS CLK, SPARE3,SPARE4] H

RESISTOR LOC(PIN)	SHOWN ON DRAW#	REF	VALUE	TERMINATES SIGNAL
R64(1)	TR01	A4	68Ω	[N/12+1,CTL CONSOLE CONTROL,EBUS CS03 E,CLK EBUS RESET E] H
R45(1)	TR03	A4	68Ω	[N/12+1,CTL EBUS PARITY OUT,EBUS SPARE19, EBUS SPARE20] E H
R103(1)	TR04	D7	68Ω	[N/12+1,CTL EBUS STATUS 00 E,CTL EBUS STATUS 03 E,CON EBOX HALTED] H
R104(1)	TR04	D7	68Ω	[N/12+1,CTL EBUS STATUS 01 E,CLK ERROR STOP,CTL EBUS STATUS 07 E] H
R118(1)	TR04	C7	68Ω	[N/12+1,CTL EBUS STATUS 02 E,CON RUN,CTL EBUS STATUS 00 E] H
R119(1)	TR05	A7	68Ω	[N/12+1,EBUS DEMAND E,CLK 10/11 CLK,SPARE39] H
R206(1)	TR05	A2	68Ω	[N/12+1,SPARE40,SPARE49,-CH CBUS RECEIVE ENA] H

NOTE:

1. ALL TERMINATORS HAVE PIN TWO CONNECTED TO -2.0V AND ARE 5% 1/4WATT UNLESS OTHERWISE SPECIFIED
2. ENTRIES ARE SORTED BY SIGNAL NAME
3. % INDICATES OUTPUT OF DIP LOC AND () INDICATES PIN NUMBER

"THIS DRAWING AND SPECIFICATIONS, HEREIN, A E THE PROPERTY OF DIGITAL EQUIPMENT CORPORATION AND SHALL NOT BE REPRODUCED OR COPIED OR USED IN WHOLE OR IN PART AS THE BASIS FOR THE MANUFACTURE OR SALE OF ITEMS WITHOUT WRITTEN PERMISSION.
COPYRIGHT © 1976, DIGITAL EQUIPMENT CORPORATION"

REVISIONS		
CHK	CHANGE NO.	REV

M8516Z.RVD[4,427] 18-JUL-76 17:50

DRN. C Smith	DATE 18-JUL-76	ENGT Iggy	DATE 20-JUL-76	TITLE: E & C BUS TRANS TERMINATORS	
CHK Iggy	DATE 20-JUL-76	BOARD LOCATION:	SHEET 2 OF 2		
FIRST USED ON OPTION/MODEL: KL10		NEXT HIGHER ASSEMBLY: B-DD-M8516-0		SIZE D	CODE CS
				NUMBER M8516-0-RES	REV. D