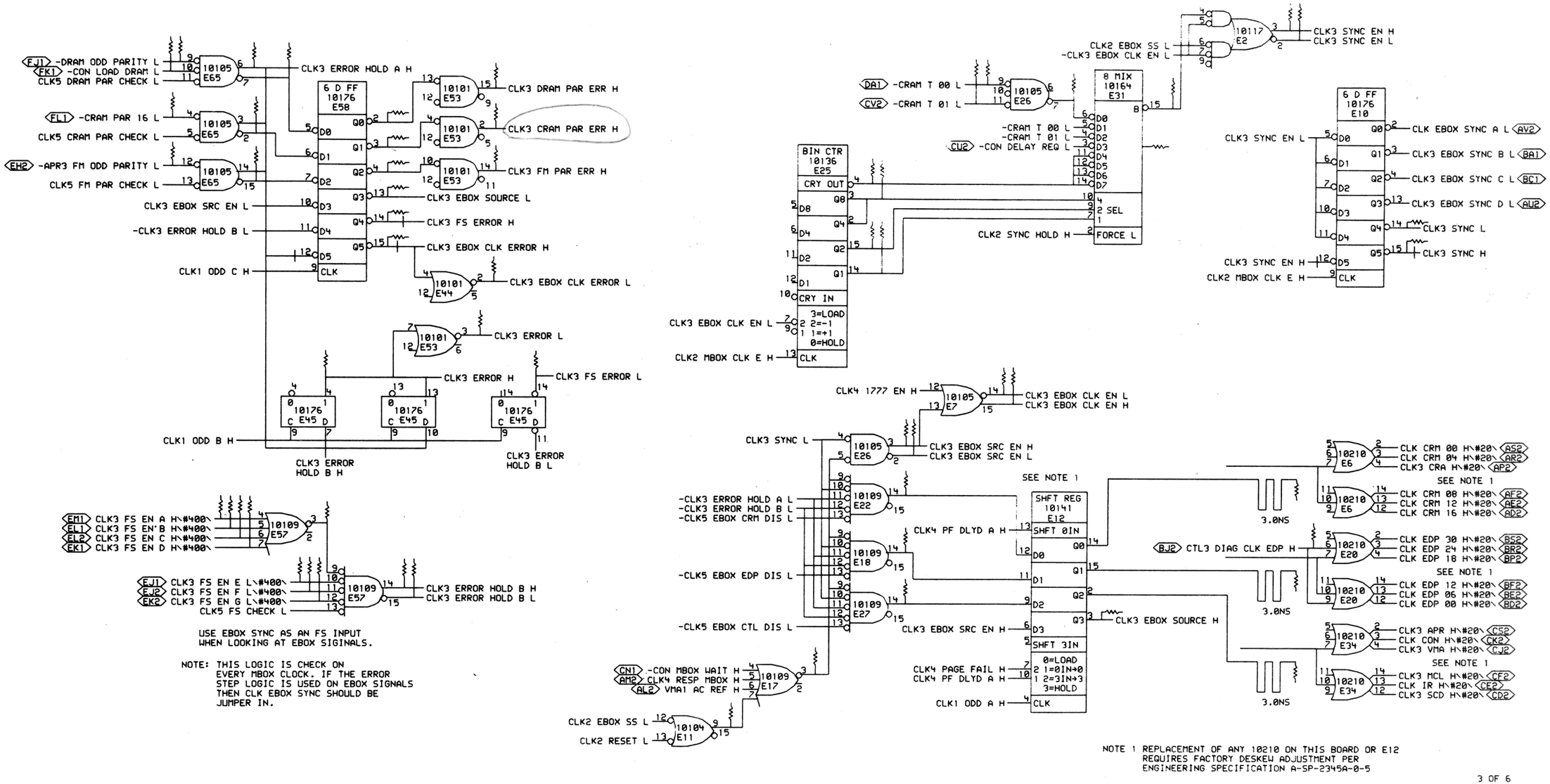

NOTE 1 REPLACEMENT OF ANY 10210 ON THIS BOARD OR E12
REQUIRES FACTORY DESKEW ADJUSTMENT PER
ENGINEERING SPECIFICATION A-SP-2345A-0-5

3 OF 6

"THIS DRAWING AND SPECIFICATIONS, HEREIN, ARE THE PROPERTY OF DIGITAL EQUIPMENT CORPORATION AND SHALL NOT BE REPRODUCED OR COPIED OR USED IN WHOLE OR IN PART AS THE BASIS FOR THE MANUFACTURE OR SALE OF ITEMS WITHOUT WRITTEN PERMISSION.
COPYRIGHT © 1977, DIGITAL EQUIPMENT CORPORATION"

REVISIONS		
CHK	CHANGE NO.	REV

digital

DRW. L. Loomis DATE 22-FEB-77 ENG. M. Bruchet DATE 19FEB77
CHK. D. Stephenson DATE 2/23/77 BOARD LOCATION: 4AF32
CLK3EF.DRW[4,55] 24-FEB-77 13:26 SHEET OF NEXT HIGHER ASSEMBLY:
FIRST USED ON OPTION/MODEL: KL10 B-DD-M8526-YA

TITLE: CLK CONTROL
EBOX CLK CONTROL

SIZE	CODE	NUMBER	REV.
D	CS	M8526-YA-CLK3	