FIELD MAINTENANCE PRINT SET
TABLE OF CONTENTS

UNIT VARIATIONS
COVERED BY THIS
PRINT SET

KL10-PV

KL10-PV
FIELD MAINTENANCE
PRINT SET

DIGITAL EQUIPMENT
CORPORATION

PRINT SET ORDER NO.
MP00301-00

"THE MATERIAL HEREIN IS FOR INFORMATION PURPOSES ONLY AND IS SUBJECT TO CHANGE WITHOUT NOTICE. DIGITAL EQUIPMENT CORPORATION ASSUMES NO RESPONSIBILITY FOR ANY ERRORS WHICH MAY APPEAR HEREIN."

"THIS DRAWING AND SPECIFICATIONS, HEREIN, ARE THE PROPERTY OF DIGITAL EQUIPMENT CORPORATION AND SHALL NOT BE REPRODUCED OR COPIED OR USED IN WHOLE OR IN PART AS THE BASIS FOR THE MANUFACTURE OR SALE OF ITEMS WITHOUT WRITTEN PERMISSION. COPYRIGHT © 1980, DIGITAL EQUIPMENT CORPORATION"

REVISIONS		
CHK	CHANGE NO.	REV
JH	KL10-PV MROS	C

DRN. S. Looney | DATE 03-JUN-80 | ENG. | DATE
CHK'D. | DATE | BOARD LOCATION: N/A | SHEET 1 OF 9
DSK:KLPVTC.T2P[4,550] 03-JUN-80 11:43 | NEXT HIGHER ASSEMBLY: NONE
FIRST USED ON OPTION/MODEL: KL10-PV

TITLE: KL10-PV BASED SYSTEM

SIZE	CODE	NUMBER	REV.
D	TC	KL10-PV-4	C

DOCUMENT NUMBER	REV	DESCRIPTION
B-TC-KL10-PV-4	C	KL10-PV FIELD MAINT. PRINT SET (TC)
D-MU-KL10-PV-CPU	*	MODULE UTILIZATION

MODULE (C.S.) CPU (E & M BOX)

B-DD-M8512-0	B	DATA PATH SHEET 2
D-UA-M8512-0-0	A1	DATA PATH SHEET 2
B-DD-M8512-0	B	DATA PATH SHEET 3
D-UA-M8512-0-0	B	DATA PATH SHEET 2
D-CS-M8512-0-DP01	A	DATA PATH
D-CS-M8512-0-DP02	A	DATA PATH
D-CS-M8512-0-DP03	A	DATA PATH
D-CS-M8512-0-DP04	A	DATA PATH
D-CS-M8512-0-EDP5	B	DATA PATH
D-CS-M8512-0-RES	A	DATA PATH
B-DD-M8513-YA	A	CACHE CONTROL SHEET 1
D-UA-M8513-YA-0	A	CACHE CONTROL SHEET 2
D-CS-M8513-YA-CSH1	A	CACHE CONTROL
D-CS-M8513-YA-CSH2	*	CACHE CONTROL
D-CS-M8513-YA-CSH3	A	CACHE CONTROL
D-CS-M8513-YA-CSH4	*	CACHE CONTROL
D-CS-M8513-YA-CSH5	*	CACHE CONTROL
D-CS-M8513-YA-CSH6	A	CACHE CONTROL
D-CS-M8513-YA-CSH7	*	CACHE CONTROL
D-CS-M8513-YA-CSH8	A	CACHE CONTROL
D-CS-M8513-YA-RES	A	CACHE CONTROL
B-DD-M8514-0	A	CACHE DIRECTORY SHEET 2
D-UA-M8514-0-0	*	CACHE DIRECTORY SHEET 2
D-CS-M8514-0-CHA1	A	CACHE DIRECTORY
D-CS-M8514-0-CHA2	A	CACHE DIRECTORY
D-CS-M8514-0-CHA3	A	CACHE DIRECTORY
D-CS-M8514-0-CHA4	A	CACHE DIRECTORY
D-CS-M8514-0-CHA5	A	CACHE DIRECTORY
D-CS-M8514-0-RES	A	CACHE DIRECTORY
B-DD-M8549-YE	*	CACHE ADDRESS SUBSTITUTE SHEET 2
D-UA-M8549-YE-0	*	CACHE ADDRESS SUBSTITUTE SHEET 2
D-CS-M8549-YE-CHAS	*	CACHE ADDRESS SUBSTITUTE

MODULE (C.S.) CPU (E & M BOX) CONTINUED

DOCUMENT NUMBER	REV	DESCRIPTION
B-DD-M8515-0	A	CACHE EXTENSION SHEET 2
D-UA-M8515-0-0	A	CACHE EXTENSION SHEET 2
D-CS-M8515-CHX1	A	CACHE EXTENSION
D-CS-M8515-CHX2	A	CACHE EXTENSION
D-CS-M8515-CHX3	A	CACHE EXTENSION
D-CS-M8515-CHX4	A	CACHE EXTENSION
D-CS-M8515-CHX5	A	CACHE EXTENSION
D-CS-M8515-RES	A	CACHE EXTENSION
D-DD-M8549-YF	B	CACHE EXTENSION SUBSTITUTE SHEET 1
D-UA-M8549-YF-0	B	CACHE EXTENSION SUBSTITUTE SHEET 2
D-CS-M8549-YF-CHXS	*	CACHE EXTENSION SUBSTITUTE
B-DD-M8516-0	D	E & C BUS TRANSLATORS SHEET 2
D-UA-M8516-0-0	C1	E & C BUS TRANSLATORS SHEET 2
B-DD-M8516-0	D	E & C BUS TRANSLATORS SHEET 3
D-UA-M8516-0-0	D	E & C BUS TRANSLATORS SHEET 2
D-CS-M8516-0-TR01	D	E & C BUS TRANSLATORS
D-CS-M8516-0-TR02	C	E & C BUS TRANSLATORS
D-CS-M8516-0-TR03	D	E & C BUS TRANSLATORS
D-CS-M8516-0-TR04	D	E & C BUS TRANSLATORS
D-CS-M8516-0-TR05	D	E & C BUS TRANSLATORS
D-CS-M8516-0-TR06	C	E & C BUS TRANSLATORS
D-CS-M8516-0-RES	D	E & C BUS TRANSLATORS
B-DD-M8517-0	A	MB BOARD SHEET 2
D-UA-M8517-0-0	A	MB BOARD SHEET 2
D-CS-M8517-0-MB01	A	MB BOARD
D-CS-M8517-0-MB02	A	MB BOARD
D-CS-M8517-0-MB03	A	MB BOARD
D-CS-M8517-0-MB04	A	MB BOARD
D-CS-M8517-0-MB05	A	MB BOARD
D-CS-M8517-0-MB06	A	MB BOARD
D-CS-M8517-0-RES	A	MB BOARD
B-DD-M8518-YA	C	PHYSICAL MEM ADR SHEET 1
D-UA-M8518-YA-0	B	PHYSICAL MEM ADR SHEET 2
D-CS-M8518-YA-PMA1	*	PHYSICAL MEM ADR
D-CS-M8518-YA-PMA2	*	PHYSICAL MEM ADR
D-CS-M8518-YA-PMA3	*	PHYSICAL MEM ADR
D-CS-M8518-YA-PMA4	*	PHYSICAL MEM ADR
D-CS-M8518-YA-PMA5	*	PHYSICAL MEM ADR
D-CS-M8518-YA-PMA6	*	PHYSICAL MEM ADR
D-CS-M8518-YA-RES	*	PHYSICAL MEM ADR

"THIS DRAWING AND SPECIFICATIONS, HEREIN, ARE THE PROPERTY OF DIGITAL EQUIPMENT CORPORATION AND SHALL NOT BE REPRODUCED OR COPIED OR USED IN WHOLE OR IN PART AS THE BASIS FOR THE MANUFACTURE OR SALE OF ITEMS WITHOUT WRITTEN PERMISSION. COPYRIGHT © 1980, DIGITAL EQUIPMENT CORPORATION"

REVISIONS		
CHK	CHANGE NO.	REV

digital

DRN: L. Loomis DATE 03-JUN-80 ENG. DATE
CHK'D. DATE BOARD LOCATION: N/A SHEET 2 OF 9
DSK:KLPVTC.T2P[4,550] 03-JUN-80 11:43 NEXT HIGHER ASSEMBLY: NONE
FIRST USED ON OPTION/MODEL: KL10-PV

TITLE: KL10-PV BASED SYSTEM

SIZE	CODE	NUMBER	REV.
D	TC	KL10-PV-4	C

MODULE (C.S.) CPU (E & M BOX) CONTINUED

DOCUMENT NUMBER	REV	DESCRIPTION
B-DD-M8519-0	B	INTERNAL MEM BUS TRANSLATORS SHEET 2
D-UA-M8519-0-0	A1	INTERNAL MEM BUS TRANSLATORS SHEET 2
B-DD-M8519-0	B	INTERNAL MEM BUS TRANSLATORS SHEET 3
D-UA-M8519-0-0	B	INTERNAL MEM BUS TRANSLATORS SHEET 2
D-CS-M8519-0-MT01	A	INTERNAL MEM BUS TRANSLATORS
D-CS-M8519-0-MT02	A	INTERNAL MEM BUS TRANSLATORS
D-CS-M8519-0-MT03	A	INTERNAL MEM BUS TRANSLATORS
D-CS-M8519-0-MT04	A	INTERNAL MEM BUS TRANSLATORS
D-CS-M8519-0-MT05	A	INTERNAL MEM BUS TRANSLATORS
D-CS-M8519-0-MT06	B	INTERNAL MEM BUS TRANSLATORS
D-CS-M8519-0-RES	A	INTERNAL MEM BUS TRANSLATORS
B-DD-M8520-YA	*	PAGING BOARD SHEET 1
D-UA-M8520-YA-0	*	PAGING BOARD SHEET 2
D-CS-M8520-YA-PAG1	*	PAGING BOARD
D-CS-M8520-YA-PAG2	*	PAGING BOARD
D-CS-M8520-YA-PAG3	*	PAGING BOARD
D-CS-M8520-YA-PAG4	*	PAGING BOARD
D-CS-M8520-YA-PAG5	*	PAGING BOARD
D-CS-M8520-YA-PAG6	*	PAGING BOARD
D-CS-M8520-YA-RES	*	PAGING BOARD
B-DD-M8521-0	*	CACHE DATA SHEET 2
D-UA-M8521-0-0	*	CACHE DATA SHEET 2
D-CS-M8521-0-CHD1	*	CACHE DATA
D-CS-M8521-0-CHD2	*	CACHE DATA
D-CS-M8521-0-CHD3	*	CACHE DATA
D-CS-M8521-0-CHD4	*	CACHE DATA
D-CS-M8521-0-CHD5	*	CACHE DATA
D-CS-M8521-0-CHD6	*	CACHE DATA
D-CS-M8521-0-RES	*	CACHE DATA
D-DD-M8549-YH	B	CACHE DATA SUBSTITUTE SHEET 1
D-UA-M8549-YH-0	B	CACHE DATA SUBSTITUTE SHEET 2
D-CS-M8549-YH-CS01	A	CACHE DATA SUBSTITUTE
B-DD-M8522-0	A	IR DRAM & CARRY SHEET 2
D-UA-M8522-0-0	A	IR DRAM & CARRY SHEET 2
D-CS-M8522-0-IRD1	*	IR DRAM & CARRY
D-CS-M8522-0-IRD2	*	IR DRAM & CARRY
D-CS-M8522-0-IRD3	*	IR DRAM & CARRY
D-CS-M8522-0-IRD4	*	IR DRAM & CARRY
D-CS-M8522-0-IRD5	*	IR DRAM & CARRY
D-CS-M8522-0-RES	*	IR DRAM & CARRY

MODULE (C.S.) CPU (E & M BOX) CONTINUED

DOCUMENT NUMBER	REV	DESCRIPTION
B-DD-M8524-0	E	SCD. PC FLAG SHEET 2
D-UA-M8524-0-0	D1	SCD. PC FLAG SHEET 2
B-DD-M8524-0	E	SCD. PC FLAG SHEET 3
D-UA-M8524-0-0	E	SCD. PC FLAG SHEET 2
D-CS-M8524-0-SCD1	B	SCD. PC FLAG
D-CS-M8524-0-SCD2	B	SCD. PC FLAG
D-CS-M8524-0-SCD3	C	SCD. PC FLAG
D-CS-M8524-0-SCD4	C	SCD. PC FLAG
D-CS-M8524-0-SCD5	C	SCD. PC FLAG
D-CS-M8524-0-SCD6	C	SCD. PC FLAG
D-CS-M8524-0-RES	C	SCD. PC FLAG
B-DD-M8525-0	F	EBOX CONTROL #2 SHEET 2
D-UA-M8525-0-0	D1	EBOX CONTROL #2 SHEET 3
D-CS-M8525-0-CON1	C1	EBOX CONTROL #2
D-CS-M8525-0-CON2	C1	EBOX CONTROL #2
D-CS-M8525-0-CON3	B1	EBOX CONTROL #2
D-CS-M8525-0-CON4	D1	EBOX CONTROL #2
D-CS-M8525-0-CON5	B1	EBOX CONTROL #2
D-CS-M8525-0-CON6	A1	EBOX CONTROL #2
D-CS-M8525-0-RES	C1	EBOX CONTROL #2
B-DD-M8525-0	F	EBOX CONTROL #2 SHEET 3
D-UA-M8525-0-0	F	EBOX CONTROL #2 SHEET 2
D-CS-M8525-0-CON1	D	EBOX CONTROL #2
D-CS-M8525-0-CON2	D	EBOX CONTROL #2
D-CS-M8525-0-CON3	D	EBOX CONTROL #2
D-CS-M8525-0-CON4	E	EBOX CONTROL #2
D-CS-M8525-0-CON5	C	EBOX CONTROL #2
D-CS-M8525-0-CON6	C	EBOX CONTROL #2
D-CS-M8525-0-RES	E	EBOX CONTROL #2
B-DD-M8526-YA	A	CLK CONTROL SHEET 1
D-UA-M8526-YA-0	A	CLK CONTROL SHEET 2
D-CS-M8526-YA-CLK1	A	CLK CONTROL
D-CS-M8526-YA-CLK2	*	CLK CONTROL
D-CS-M8526-YA-CLK3	*	CLK CONTROL
D-CS-M8526-YA-CLK4	*	CLK CONTROL
D-CS-M8526-YA-CLK5	*	CLK CONTROL
D-CS-M8526-YA-CLK6	*	CLK CONTROL
D-CS-M8526-YA-RES	*	CLK CONTROL

"THIS DRAWING AND SPECIFICATIONS, HEREIN, ARE THE PROPERTY OF DIGITAL EQUIPMENT CORPORATION AND SHALL NOT BE REPRODUCED OR COPIED OR USED IN WHOLE OR IN PART AS THE BASIS FOR THE MANUFACTURE OR SALE OF ITEMS WITHOUT WRITTEN PERMISSION. COPYRIGHT © 1980, DIGITAL EQUIPMENT CORPORATION"

REVISIONS		
CHK	CHANGE NO.	REV

digital

DRN. D. Looney DATE 03-JUN-80 ENG. DATE
CHK'D. DATE BOARD LOCATION: N/A SHEET 3 OF 9
DSK:KLPVTC.T2P[4,550] 03-JUN-80 11:44 NEXT HIGHER ASSEMBLY: NONE
FIRST USED ON OPTION/MODEL: KL10-PV

TITLE: KL10-PV BASED SYSTEM

SIZE	CODE	NUMBER	REV.
D	TC	KL10-PV-4	C

MODULE (C.S.) CPU (E & M BOX) CONTINUED

DOCUMENT NUMBER	REV	DESCRIPTION
B-DD-M8529-YA	*	MBOX CONTROL LOGIC SHEET 1
D-UA-M8529-YA-0	*	MBOX CONTROL LOGIC SHEET 2
D-CS-M8529-YA-MBX1	*	MBOX CONTROL LOGIC
D-CS-M8529-YA-MBX2	*	MBOX CONTROL LOGIC
D-CS-M8529-YA-MBX3	*	MBOX CONTROL LOGIC
D-CS-M8529-YA-MBX4	*	MBOX CONTROL LOGIC
D-CS-M8529-YA-MBX5	*	MBOX CONTROL LOGIC
D-CS-M8529-YA-MBX6	*	MBOX CONTROL LOGIC
D-CS-M8529-YA-MBX7	*	MBOX CONTROL LOGIC
D-CS-M8529-YA-RES	*	MBOX CONTROL LOGIC
B-DD-M8531-YA	*	MBC MBOX CONTROL SHEET 1
D-UA-M8531-YA-0	*	MBC MBOX CONTROL SHEET 2
D-CS-M8531-YA-MBC1	*	MBC MBOX CONTROL
D-CS-M8531-YA-MBC2	*	MBC MBOX CONTROL
D-CS-M8531-YA-MBC3	*	MBC MBOX CONTROL
D-CS-M8531-YA-MBC4	*	MBC MBOX CONTROL
D-CS-M8531-YA-MBC5	*	MBC MBOX CONTROL
D-CS-M8531-YA-MBC6	*	MBC MBOX CONTROL
D-CS-M8531-YA-RES	*	MBC MBOX CONTROL
D-DD-M8532-0	F	PRIORITY INTERRUPT SHEET 1
D-UA-M8532-0-0	D2	PRIORITY INTERRUPT SHEET 2
D-CS-M8532-0-PIC1	A1	PRIORITY INTERRUPT
D-CS-M8532-0-PIC2	B2	PRIORITY INTERRUPT
D-CS-M8532-0-PIC3	C1	PRIORITY INTERRUPT
D-CS-M8532-0-PIC4	B1	PRIORITY INTERRUPT
D-CS-M8532-0-PIC5	B2	PRIORITY INTERRUPT
D-CS-M8532-0-PIC6	A1	PRIORITY INTERRUPT
D-CS-M8532-0-RES	B1	PRIORITY INTERRUPT
D-DD-M8532-0	F	PRIORITY INTERRUPT SHEET 2
D-UA-M8532-0-0	F	PRIORITY INTERRUPT SHEET 1
D-CS-M8532-0-PIC1	B	PRIORITY INTERRUPT
D-CS-M8532-0-PIC2	D	PRIORITY INTERRUPT
D-CS-M8532-0-PIC3	D	PRIORITY INTERRUPT
D-CS-M8532-0-PIC4	C	PRIORITY INTERRUPT
D-CS-M8532-0-PIC5	D	PRIORITY INTERRUPT
D-CS-M8532-0-PIC6	C	PRIORITY INTERRUPT
D-CS-M8532-0-RES	C	PRIORITY INTERRUPT
B-DD-M8549-YB	*	CHANNEL CONTROL WORD SUBSTITUTE SHEET 2
D-UA-M8549-YB-0	*	CHANNEL CONTROL WORD SUBSTITUTE SHEET 2
D-CS-M8549-YB-CCWS	*	CHANNEL CONTROL WORD SUBSTITUTE

MODULE (C.S.) CPU (E & M BOX) CONTINUED

DOCUMENT NUMBER	REV	DESCRIPTION
B-DD-M8533-0	B	CHANNEL CONTROL SHEET 2
D-UA-M8533-0-0	B	CHANNEL CONTROL SHEET 2
D-CS-M8533-0-CHC1	B	CHANNEL CONTROL
D-CS-M8533-0-CHC2	B	CHANNEL CONTROL
D-CS-M8533-0-CHC3	B	CHANNEL CONTROL
D-CS-M8533-0-CHC4	B	CHANNEL CONTROL
D-CS-M8533-0-CHC5	B	CHANNEL CONTROL
D-CS-M8533-0-CHC6	B	CHANNEL CONTROL
D-CS-M8533-0-RES	B	CHANNEL CONTROL
B-DD-M8534-0	D	CHANNEL CONTROL WORD SHEET 2
D-UA-M8534-0-0	B1	CHANNEL CONTROL WORD SHEET 2
B-DD-M8534-0	D	CHANNEL CONTROL WORD SHEET 3
D-UA-M8534-0-0	C	CHANNEL CONTROL WORD SHEET 2
D-CS-M8534-0-CCW1	B	CHANNEL CONTROL WORD
D-CS-M8534-0-CCW2	C	CHANNEL CONTROL WORD
D-CS-M8534-0-CCW3	B	CHANNEL CONTROL WORD
D-CS-M8534-0-CCW4	A	CHANNEL CONTROL WORD
D-CS-M8534-0-CCW5	C	CHANNEL CONTROL WORD
D-CS-M8534-0-CCW6	B	CHANNEL CONTROL WORD
D-CS-M8534-0-CCW7	C	CHANNEL CONTROL WORD
D-CS-M8534-0-RES	C	CHANNEL CONTROL WORD
B-DD-M8549-YA	*	CHANNEL CONTROL SUBSTITUTE SHEET 2
D-UA-M8549-YA-0	A	CHANNEL CONTROL SUBSTITUTE SHEET 2
D-CS-M8549-YA-CHS	*	CHANNEL CONTROL SUBSTITUTE
B-DD-M8535-0	C	CHANNEL RAM CONTROL SHEET 2
D-UA-M8535-0-0	B1	CHANNEL RAM CONTROL SHEET 2
D-CS-M8535-0-CRC1	B1	CHANNEL RAM CONTROL
D-CS-M8535-0-CRC2	B1	CHANNEL RAM CONTROL
D-CS-M8535-0-CRC3	B1	CHANNEL RAM CONTROL
D-CS-M8535-0-CRC4	B1	CHANNEL RAM CONTROL
D-CS-M8535-0-CRC5	B1	CHANNEL RAM CONTROL
D-CS-M8535-0-CRC6	B1	CHANNEL RAM CONTROL
D-CS-M8535-0-CRC7	B1	CHANNEL RAM CONTROL
D-CS-M8535-0-RES	B1	CHANNEL RAM CONTROL
B-DD-M8535-0	C	CHANNEL RAM CONTROL SHEET 3
D-UA-M8535-0-0	C	CHANNEL RAM CONTROL SHEET 2
D-CS-M8535-0-CRC1	C	CHANNEL RAM CONTROL
D-CS-M8535-0-CRC2	C	CHANNEL RAM CONTROL
D-CS-M8535-0-CRC3	C	CHANNEL RAM CONTROL
D-CS-M8535-0-CRC4	C	CHANNEL RAM CONTROL
D-CS-M8535-0-CRC5	C	CHANNEL RAM CONTROL
D-CS-M8535-0-CRC6	C	CHANNEL RAM CONTROL
D-CS-M8535-0-CRC7	C	CHANNEL RAM CONTROL
D-CS-M8535-0-RES	C	CHANNEL RAM CONTROL

"THIS DRAWING AND SPECIFICATIONS, HEREIN, ARE THE PROPERTY OF DIGITAL EQUIPMENT CORPORATION AND SHALL NOT BE REPRODUCED OR COPIED OR USED IN WHOLE OR IN PART AS THE BASIS FOR THE MANUFACTURE OR SALE OF ITEMS WITHOUT WRITTEN PERMISSION. COPYRIGHT © 1980, DIGITAL EQUIPMENT CORPORATION"

REVISIONS		
CHK	CHANGE NO.	REV

digital

DRN. L. Loosly DATE 03-JUN-80 ENG. DATE
CHK'D. DATE BOARD LOCATION: N/A
SHEET 4 OF 9
DSK:KLPVTC.T2P[4,550] 03-JUN-80 11:44 NEXT HIGHER ASSEMBLY: NONE
FIRST USED ON OPTION/MODEL: KL10-PV

TITLE: KL10-PV BASED SYSTEM

SIZE	CODE	NUMBER	REV.
D	TC	KL10-PV-4	C

MODULE (C.S.) CPU (E & M BOX) CONTINUED

DOCUMENT NUMBER	REV	DESCRIPTION
B-DD-M8536-0	D	CHANNEL CONTROL LOGIC SHEET 2
D-UA-M8536-0-0	C1	CHANNEL CONTROL LOGIC SHEET 2
D-CS-M8536-0-CCL1	C1	CHANNEL CONTROL LOGIC
D-CS-M8536-0-CCL2	B1	CHANNEL CONTROL LOGIC
D-CS-M8536-0-CCL3	B1	CHANNEL CONTROL LOGIC
D-CS-M8536-0-CCL4	C1	CHANNEL CONTROL LOGIC
D-CS-M8536-0-CCL5	C1	CHANNEL CONTROL LOGIC
D-CS-M8536-0-CCL6	C1	CHANNEL CONTROL LOGIC
D-CS-M8536-0-CCL7	C1	CHANNEL CONTROL LOGIC
D-CS-M8536-0-RES	B1	CHANNEL CONTROL LOGIC
B-DD-M8536-0	D	CHANNEL CONTROL LOGIC SHEET 3
D-UA-M8536-0-0	D	CHANNEL CONTROL LOGIC SHEET 2
D-CS-M8536-0-CCL1	D	CHANNEL CONTROL LOGIC
D-CS-M8536-0-CCL2	C	CHANNEL CONTROL LOGIC
D-CS-M8536-0-CCL3	C	CHANNEL CONTROL LOGIC
D-CS-M8536-0-CCL4	D	CHANNEL CONTROL LOGIC
D-CS-M8536-0-CCL5	D	CHANNEL CONTROL LOGIC
D-CS-M8536-0-CCL6	D	CHANNEL CONTROL LOGIC
D-CS-M8536-0-CCL7	D	CHANNEL CONTROL LOGIC
D-CS-M8536-0-RES	C	CHANNEL CONTROL LOGIC
D-DD-M8549-YD	B	CHANNEL CONTROL LOGIC SHEET 1
D-UA-M8549-YD-0	B	CHANNEL CONTROL LOGIC SHEET 2
D-CS-M8549-YD-CCLS	*	CHANNEL CONTROL LOGIC
B-DD-M8537-0	D	MBOX CONTROL #4 SHEET 2
D-UA-M8537-0-0	C1	MBOX CONTROL #4 SHEET 3
D-CS-M8537-0-MBZ1	B1	MBOX CONTROL #4
D-CS-M8537-0-MBZ2	A1	MBOX CONTROL #4
D-CS-M8537-0-MBZ3	B1	MBOX CONTROL #4
D-CS-M8537-0-MBZ4	B1	MBOX CONTROL #4
D-CS-M8537-0-MBZ5	A1	MBOX CONTROL #4
D-CS-M8537-0-MBZ6	B1	MBOX CONTROL #4
D-CS-M8537-0-MBZ7	A1	MBOX CONTROL #4
D-CS-M8537-0-RES	B1	MBOX CONTROL #4
B-DD-M8537-0	D	MBOX CONTROL #4 SHEET 3
D-UA-M8537-0-0	D	MBOX CONTROL #4 SHEET 2
D-CS-M8537-0-MBZ1	C	MBOX CONTROL #4
D-CS-M8537-0-MBZ2	B	MBOX CONTROL #4
D-CS-M8537-0-MBZ3	C	MBOX CONTROL #4
D-CS-M8537-0-MBZ4	C	MBOX CONTROL #4
D-CS-M8537-0-MBZ5	B	MBOX CONTROL #4
D-CS-M8537-0-MBZ6	C	MBOX CONTROL #4
C-CS-M8537-0-MBZ7	B	MBOX CONTROL #4
D-CS-M8537-0-RES	C	MBOX CONTROL #4

MODULE (C.S.) CPU (E & M BOX) CONTINUED

DOCUMENT NUMBER	REV	DESCRIPTION
B-DD-M8538-0	E	METER BOARD SHEET 2
D-UA-M8538-0-0	B1	METER BOARD SHEET 2
D-CS-M8538-0-MTR1	A1	METER BOARD
D-CS-M8538-0-MTR2	B1	METER BOARD
D-CS-M8538-0-MTR3	B1	METER BOARD
D-CS-M8538-0-MTR4	B1	METER BOARD
D-CS-M8538-0-MTR5	B1	METER BOARD
D-CS-M8538-0-MTR6	B1	METER BOARD
D-CS-M8538-0-RES	B1	METER BOARD
B-DD-M8538-0	E	METER BOARD SHEET 3
D-UA-M8538-0-0	D	METER BOARD SHEET 2
D-CS-M8538-0-MTR1	B	METER BOARD
D-CS-M8538-0-MTR2	D	METER BOARD
D-CS-M8538-0-MTR3	C	METER BOARD
D-CS-M8538-0-MTR4	D	METER BOARD
D-CS-M8538-0-MTR5	C	METER BOARD
D-CS-M8538-0-MTR6	C	METER BOARD
D-CS-M8538-0-RES	C	METER BOARD
B-DD-M8540-0	*	SHIFT MATRIX SHEET 1
D-UA-M8540-0-0	*	SHIFT MATRIX SHEET 2
D-CS-M8540-0-SHM1	*	SHIFT MATRIX
D-CS-M8540-0-SHM2	*	SHIFT MATRIX
D-CS-M8540-0-SHM3	*	SHIFT MATRIX
D-CS-M8540-0-SHM4	*	SHIFT MATRIX
D-CS-M8540-0-SHM5	*	SHIFT MATRIX
D-CS-M8540-0-RES	*	SHIFT MATRIX
B-DD-M8541-0	*	CONTROL RAM APR SHEET 1
D-UA-M8541-0-0	*	CONTROL RAM APR SHEET 2
D-CS-M8541-0-CRA1	*	CONTROL RAM APR
D-CS-M8541-0-CRA2	*	CONTROL RAM APR
D-CS-M8541-0-CRA3	*	CONTROL RAM APR
D-CS-M8541-0-CRA4	*	CONTROL RAM APR
D-CS-M8541-0-CRA5	*	CONTROL RAM APR
D-CS-M8541-0-CRA6	*	CONTROL RAM APR
D-CS-M8541-0-RES	*	CONTROL RAM APR

"DRAWING AND SPECIFICATIONS, HERE, ARE THE PROPERTY OF DIGITAL EQUIPMENT CORPORATION AND MAY NOT BE REPRODUCED OR COPIED IN WHOLE OR IN PART AS BASIS FOR THE MANUFACTURE OR SALE OF ITEMS WITHOUT WRITTEN PERMISSION. COPYRIGHT © 1980, DIGITAL EQUIPMENT CORPORATION"

REVISIONS		
CHK	CHANGE NO.	REV

digital

DRN. S. Loomby DATE 03-JUN-80 ENG. DATE
CHK'D. DATE BOARD LOCATION: N/A
SHEET 5 OF 9
DSK:KLPVTC.T2P[4,550] 03-JUN-80 11:44 NEXT HIGHER ASSEMBLY: NONE
FIRST USED ON OPTION/MODEL: KL10-PV

TITLE: KL10-PV BASED SYSTEM

SIZE	CODE	NUMBER	REV.
D	TC	KL10-PV-4	C

MODULE (C.S.) CPU (E & M BOX) CONTINUED

DOCUMENT NUMBER	REV	DESCRIPTION
B-DD-M8542-0	*	VMA BOARD SHEET 1
D-UA-M8542-0-0	*	VMA BOARD SHEET 2
D-CS-M8542-0-VMA1	*	VMA BOARD
D-CS-M8542-0-VMA2	*	VMA BOARD
D-CS-M8542-0-VMA3	*	VMA BOARD
D-CS-M8542-0-VMA4	*	VMA BOARD
D-CS-M8542-0-VMA5	*	VMA BOARD
D-CS-M8542-0-VMA6	*	VMA BOARD
D-CS-M8542-0-RES	*	VAM BOARD
B-DD-M8543-0	*	EBOX CONTROL #1 SHEET 1
D-UA-M8543-0-0	*	EBOX CONTROL #1 SHEET 2
D-CS-M8543-0-CTL1	*	EBOX CONTROL #1
D-CS-M8543-0-CTL2	*	EBOX CONTROL #1
D-CS-M8543-0-CTL3	*	EBOX CONTROL #1
D-CS-M8543-0-CTL4	*	EBOX CONTROL #1
D-CS-M8543-0-RES	*	EBOX CONTROL #1
B-DD-M8544-0	*	MEMORY CONTROL SHEET 1
D-UA-M8544-0-0	*	MEMORY CONTROL SHEET 2
D-CS-M8544-0-MCL1	*	MEMORY CONTROL
D-CS-M8544-0-MCL2	*	MEMORY CONTROL
D-CS-M8544-0-MCL3	*	MEMORY CONTROL
D-CS-M8544-0-MCL4	*	MEMORY CONTROL
D-CS-M8544-0-MCL5	*	MEMORY CONTROL
D-CS-M8544-0-MCL6	*	MEMORY CONTROL
D-CS-M8544-0-MCL7	*	MEMORY CONTROL
D-CS-M8544-0-RES	*	MEMORY CONTROL
B-DD-M8545-0	*	APR BOARD SHEET 1
D-UA-M8545-0-0	*	APR BOARD SHEET 2
D-CS-M8545-0-APR1	*	APR BOARD
D-CS-M8545-0-APR2	*	APR BOARD
D-CS-M8545-0-APR3	*	APR BOARD
D-CS-M8545-0-APR4	*	APR BOARD
D-CS-M8545-0-APR5	*	APR BOARD
D-CS-M8545-0-APR6	*	APR BOARD
D-CS-M8545-0-APR6	*	APR BOARD
D-CS-M8545-0-RES	*	APR BOARD

MODULE (C.S.) CPU (E & M BOX) CONTINUED

DOCUMENT NUMBER	REV	DESCRIPTION
B-DD-M8548-0	*	CONTROL RAM SHEET 1
D-UA-M8548-0-0	*	CONTROL RAM SHEET 2
D-CS-M8548-0-CR01	*	CONTROL RAM
D-CS-M8548-0-CR02	*	CONTROL RAM
D-CS-M8548-0-CR03	*	CONTROL RAM
D-CS-M8548-0-CR04	*	CONTROL RAM
D-CS-M8548-0-CR05	*	CONTROL RAM
D-CS-M8548-0-CR06	*	CONTROL RAM
D-CS-M8548-0-CRAM	*	CRAM NAMES
D-IC-KL10-0-EBUS	*	EBUS CABLE
D-IC-KL10-0-IOC1	*	EBUS CABLE I/O TO CPU
D-IC-KL10-0-IOC2	*	EBUS CABLE I/O TO CPU
D-IC-KL10-0-SBUS	*	SBUS CABLE MEMORY TO CPU

"THIS DRAWING AND SPECIFICATIONS, HEREIN, ARE THE PROPERTY OF DIGITAL EQUIPMENT CORPORATION AND SHALL NOT BE REPRODUCED OR COPIED OR USED IN WHOLE OR IN PART AS THE BASIS FOR THE MANUFACTURE OR SALE OF ITEMS WITHOUT WRITTEN PERMISSION. COPYRIGHT © 1980, DIGITAL EQUIPMENT CORPORATION"

REVISIONS		
CHK	CHANGE NO.	REV

digital

DRN. Y. Tanaky DATE 03-JUN-80 ENG. DATE
CHK'D. DATE BOARD LOCATION: N/A
SHEET 6 OF 9
DSK:KLPVTC.T2P[4,550] 03-JUN-80 11:44 NEXT HIGHER ASSEMBLY: NONE
FIRST USED ON OPTION/MODEL: KL10-PV

TITLE: KL10-PV BASED SYSTEM

SIZE	CODE	NUMBER	REV.
D	TC	KL10-PV-4	C

MODULE (C.S.) DTE (10/11 INTERFACE)

DOCUMENT NUMBER	REV	DESCRIPTION
C-MU-KL10-0-DTE	A	MODULE UTILIZATION
D-MU-KL10-0-RHDTE	*	MODULE UTILIZATION
B-DD-M8552-0	E	DATA PATH AND STATUS SHEET 2
D-UA-M8552-0-0	D1	DATA PATH AND STATUS SHEET 2
D-CS-M8552-0-DPS1	B1	DATA PATH AND STATUS
D-CS-M8552-0-DPS2	A1	DATA PATH AND STATUS
D-CS-M8552-0-DPS3	A1	DATA PATH AND STATUS
D-CS-M8552-0-DPS4	A1	DATA PATH AND STATUS
D-CS-M8552-0-DPS5	C1	DATA PATH AND STATUS
D-CS-M8552-0-DPS6	A1	DATA PATH AND STATUS
D-CS-M8552-0-DPS7	C1	DATA PATH AND STATUS
D-CS-M8552-0-DPS8	C1	DATA PATH AND STATUS
B-DD-M8552-0	E	DATA PATH AND STATUS SHEET 3
D-UA-M8552-0-0	E	DATA PATH AND STATUS SHEET 3
D-CS-M8552-0-DPS1	C	DATA PATH AND STATUS
D-CS-M8552-0-DPS2	B	DATA PATH AND STATUS
D-CS-M8552-0-DPS3	B	DATA PATH AND STATUS
D-CS-M8552-0-DPS4	B	DATA PATH AND STATUS
D-CS-M8552-0-DPS5	D	DATA PATH AND STATUS
D-CS-M8552-0-DPS6	B	DATA PATH AND STATUS
D-CS-M8552-0-DPS7	D	DATA PATH AND STATUS
D-CS-M8552-0-DPS8	D	DATA PATH AND STATUS
B-DD-M8553-0	L	DTE20 CONTROL LOGIC SHEET 2
D-UA-M8553-0-0	H1	DTE20 CONTROL LOGIC SHEET 3
D-CS-M8553-0-CNT1	B1	DTE20 CONTROL LOGIC
D-CS-M8553-0-CNT2	C1	DTE20 CONTROL LOGIC
D-CS-M8553-0-CNT3	A1	DTE20 CONTROL LOGIC
D-CS-M8553-0-CNT4	D1	DTE20 CONTROL LOGIC
D-CS-M8553-0-CNT5	B1	DTE20 CONTROL LOGIC
D-CS-M8553-0-CNT6	B1	DTE20 CONTROL LOGIC
D-CS-M8553-0-CNT7	A1	DTE20 CONTROL LOGIC
D-CS-M8553-0-CNT8	C1	DTE20 CONTROL LOGIC
D-CS-M8553-0-CNT9	A1	DTE20 CONTROL LOGIC
B-DD-M8553-0	L	DTE20 CONTROL LOGIC SHEET 3
D-UA-M8553-0-0	K	DTE20 CONTROL LOGIC SHEET 2
D-CS-M8553-0-CNT1	C	DTE20 CONTROL LOGIC
D-CS-M8553-0-CNT2	E	DTE20 CONTROL LOGIC
D-CS-M8553-0-CNT3	B	DTE20 CONTROL LOGIC
D-CS-M8553-0-CNT4	E	DTE20 CONTROL LOGIC
D-CS-M8553-0-CNT5	C	DTE20 CONTROL LOGIC
D-CS-M8553-0-CNT6	C	DTE20 CONTROL LOGIC
D-CS-M8553-0-CNT7	B	DTE20 CONTROL LOGIC
D-CS-M8553-0-CNT8	D	DTE20 CONTROL LOGIC
D-CS-M8553-0-CNT9	C	DTE20 CONTROl LOGIC

DOCUMENT NUMBER	REV	DESCRIPTION
B-DD-M8554-0	E	UNIBUS INTERRUPT SHEET 2
D-UA-M8554-0-0	E	UNIBUS INTERRUPT SHEET 2
D-CS-M8554-0-INT1	E	UNIBUS INTERRUPT CONTROL
D-CS-M8554-0-INT2	C	UNIBUS INTERRUPT CONTROL
D-CS-M8554-0-INT3	C	UNIBUS INTERRUPT CONTROL
B-DD-M8559-0	*	I/O BOX CLOCK DISTRIBUTION SHEET 2
D-UA-M8559-0-0	*	I/O BOX CLOCK DISTRIBUTION SHEET 2
D-CS-M8559-0-CDS1	*	I/O BOX CLOCK DISTRIBUTION
D-CS-M8559-0-CDS2	*	I/O BOX CLOCK DISTRIBUTION
D-CS-M8559-0-CDS3	*	I/O BOX CLOCK DISTRIBUTION
D-CS-KL10-C-UBCI	*	UNIBUS CABLE IN
D-CS-KL10-C-UBCO	*	UNIBUS CABLE OUT
D-CS-M8564-0-INTJ	*	DTE20 INTERRUPT JUMPER

"THIS DRAWING AND SPECIFICATIONS, HEREIN, ARE THE PROPERTY OF DIGITAL EQUIPMENT CORPORATION AND SHALL NOT BE REPRODUCED OR COPIED OR USED IN WHOLE OR IN PART AS THE BASIS FOR THE MANUFACTURE OR SALE OF ITEMS WITHOUT WRITTEN PERMISSION. COPYRIGHT © 1980, DIGITAL EQUIPMENT CORPORATION"

REVISIONS		
CHK	CHANGE NO.	REV

digital

DRW: G. Loosly DATE 03-JUN-80 ENG. DATE
CHK'D. DATE BOARD LOCATION: N/A SHEET 7 OF 9
DSK:KLPVTC.T2P[4,550] 03-JUN-80 11:44 NEXT HIGHER ASSEMBLY: NONE
FIRST USED ON OPTION/MODEL: KL10-PV

TITLE: KL10-PV BASED SYSTEM

SIZE	CODE	NUMBER	REV.
D	TC	KL10-PV-4	C

MODULE (C.S.) DIA (I/O ADAPTER)

DOCUMENT NUMBER	REV	DESCRIPTION
C-MU-KL10-0-BAY1	*	MODULE UTILIZATION BAY 1
B-DD-M8550-0	C	IBUS ADAPTER DATA PATH SHEET 2
D-UA-M8550-0-0	A	IBUS ADAPTER DATA PATH SHEET 3
D-CS-M8550-0-DLH1	B	IBUS ADAPTER DATA PATH
D-CS-M8550-0-DLH2	B	IBUS ADAPTER DATA PATH
D-CS-M8550-0-DLH3	B	IBUS ADAPTER DATA PATH
D-CS-M8550-0-DLH4	B	IBUS ADAPTER DATA PATH
D-CS-M8550-0-DLH5	B	IBUS ADAPTER DATA PATH
D-CS-M8550-0-DLH6	B	IBUS ADAPTER DATA PATH
B-DD-M8550-0	C	IBUS ADAPTER DATA PATH SHEET 3
D-UA-M8550-0-0	B	IBUS ADAPTER DATA PATH SHEET 2
D-CS-M8550-0-DLH1	B	IBUS ADAPTER DATA PATH
D-CS-M8550-0-DLH2	B	IBUS ADAPTER DATA PATH
D-CS-M8550-0-DLH3	B	IBUS ADAPTER DATA PATH
D-CS-M8550-0-DLH4	B	IBUS ADAPTER DATA PATH
D-CS-M8550-0-DLH5	B	IBUS ADAPTER DATA PATH
D-CS-M8550-0-DLH6	B	IBUS ADAPTER DATA PATH
B-DD-M8551-0	B	I/O BUS ADAPTER CONTROL INTERFACE SHEET 2
D-UA-M8551-0-0	B	I/O BUS ADAPTER CONTROL INTERFACE SHEET 2
D-CS-M8551-0-CL1	B	I/O BUS ADAPTER CONTROL INTERFACE
D-CS-M8551-0-CL2	A	I/O BUS ADAPTER CONTROL INTERFACE
D-CS-M8551-0-CL3	B	I/O BUS ADAPTER CONTROL INTERFACE
D-CS-M8551-0-CL4	B	I/O BUS ADAPTER CONTROL INTERFACE
D-CS-M8551-0-CL5	A	I/O BUS ADAPTER CONTROL INTERFACE
D-IC-KL10-0-IBUS	*	KL10 I/O BUS CONNECTOR
D-IC-KL10-0-MBUS	*	KL10 MEMORY BUS CONNECTOR

MODULE (C.S.) DMA (MEM ADAPTER)

DOCUMENT NUMBER	REV	DESCRIPTION
C-MU-KL10-0-BAY1	*	MODULE UTILIZATION BAY 1
B-DD-M8558-0	D	KI MEMORY BUS ADAPTER SHEET 2
D-UA-M8558-0-0	C1	KI MEMORY BUS ADAPTER SHEET 2
D-CS-M8558-0-MA01	B1	KI MEMORY BUS ADAPTER
D-CS-M8558-0-MA02	B1	KI MEMORY BUS ADAPTER
D-CS-M8558-0-MA03	B1	KI MEMORY BUS ADAPTER
D-CS-M8558-0-MA04	B1	KI MEMORY BUS ADAPTER
D-CS-M8558-0-MA05	B1	KI MEMORY BUS ADAPTER
D-CS-M8558-0-MA06	B1	KI MEMORY BUS ADAPTER
B-DD-M8558-0	D	KI MEMORY BUS ADAPTER SHEET 3
D-UA-M8558-0-0	D	KI MEMORY BUS ADAPTER SHEET 2
D-CS-M8558-0-MA01	C	KI MEMORY BUS ADAPTER
D-CS-M8558-0-MA02	C	KI MEMORY BUS ADAPTER
D-CS-M8558-0-MA03	C	KI MEMORY BUS ADAPTER
D-CS-M8558-0-MA04	C	KI MEMORY BUS ADAPTER
D-CS-M8558-0-MA05	C	KI MEMORY BUS ADAPTER
D-CS-M8558-0-MA06	C	KI MEMORY BUS ADAPTER
B-DD-M8560-0	C	DMA TIMING/SBUS TRANCEIVERS SHEET 2
D-UA-M8560-0-0	C	DMA TIMING/SBUS TRANCEIVERS SHEET 3
D-CS-M8560-0-DTR1	C	DMA TIMING/SBUS TRANCEIVERS
D-CS-M8560-0-DTR2	A	DMA TIMING/SBUS TRANCEIVERS
D-CS-M8560-0-DTR3	B	DMA TIMING/SBUS TRANCEIVERS
D-CS-M8560-0-DTR4	B	DMA TIMING/SBUS TRANCEIVERS
D-CS-M8560-0-DTR5	A	DMA TIMING/SBUS TRANCEIVERS
B-DD-M8563-0	E	DMA20 BOARD #2 SHEET 2
D-UA-M8563-0-0	C2	DMA20 BOARD #2 SHEET 3
D-CS-M8563-0-DMC1	A1	DMA20 BOARD #2
D-CS-M8563-0-DMC2	B2	DMA20 BOARD #2
D-CS-M8563-0-DMC3	A1	DMA20 BOARD #2
D-CS-M8563-0-DMC4	B1	DMA20 BOARD #2
D-CS-M8563-0-DMC5	B1	DMA20 BOARD #2
D-CS-M8563-0-DMC6	A1	DMA20 BOARD #2
D-CS-M8563-0-DMC7	A1	DMA20 BOARD #2
B-DD-M8563-0	E	DMA20 BOARD #2 SHEET 3
D-UA-M8563-0-0	E	DMA20 BOARD #2 SHEET 2
D-CS-M8563-0-DMC1	B	DMA20 BOARD #2
D-CS-M8563-0-DMC2	D	DMA20 BOARD #2
D-CS-M8563-0-DMC3	B	DMA20 BOARD #2
D-CS-M8563-0-DMC4	C	DMA20 BOARD #2
D-CS-M8563-0-DMC5	C	DMA20 BOARD #2
D-CS-M8563-0-DMC6	B	DMA20 BOARD #2
D-CS-M8563-0-DMC7	C	DMA20 BOARD #2

"THIS DRAWING AND SPECIFICATIONS, HEREIN, ARE THE PROPERTY OF DIGITAL EQUIPMENT CORPORATION AND SHALL NOT BE REPRODUCED OR COPIED OR USED IN WHOLE OR IN PART AS THE BASIS FOR THE MANUFACTURE OR SALE OF ITEMS WITHOUT WRITTEN PERMISSION. COPYRIGHT © 1980, DIGITAL EQUIPMENT CORPORATION"

REVISIONS		
CHK	CHANGE NO.	REV

DRN. L. Loomis DATE 03-JUN-80 ENG. DATE
CHK'D. DATE BOARD LOCATION: N/A SHEET 8 OF 9
DSK:KLPVTC.T2P[4,550] 03-JUN-80 11:44 NEXT HIGHER ASSEMBLY: NONE
FIRST USED ON OPTION/MODEL: KL10-PV

TITLE: KL10-PV BASED SYSTEM

SIZE	CODE	NUMBER	REV.
D	TC	KL10-PV-4	C

DOCUMENT NUMBER	REV	DESCRIPTION
D-DD-M8580-0	*	DUAL TRANSLATOR
D-UA-M8580-0-0	A	DUAL TRANSLATOR
D-CS-M8580-0-DT01	*	DUAL TRANSLATOR
D-CS-M8580-0-DT02	*	DATA TRANCVR 0-5
D-CS-M8580-0-DT03	*	DATA TRANSCVR 6-11
D-CS-M8580-0-DT04	*	DATA TRANSCVR 12-17
D-CS-M8580-0-DT05	*	ADDRESS DRIVERS
D-CS-M8580-0-DT06	*	CTRL AND REF VOLT
D-CS-M8580-0-DT07	*	MEM DATA DRIVERS
D-CS-M8580-0-DT08	*	POWER & GND CAPS
D-CS-M8580-0-RES	*	TERMINATORS
D-CS-M8581-0	*	X BUS TRANSLATOR
D-CS-M8581-0-0	A	X BUS TRANSLATOR
D-CS-M8581-0-DX01	*	X BUS TRANSLATOR
D-CS-M8581-0-DX02	*	DATA TRANSCVR 0-5
D-CS-M8581-0-DX03	*	DATA TRANSCVR 6-11
D-CS-M8581-0-DX04	*	DATA TRANSCVR 12-17
D-CS-M8581-0-DX05	*	ADDRESS DRIVERS
D-CS-M8581-0-DX06	*	CTRL AND REF VOLT
D-CS-M8581-0-DX07	*	POWER & GND CAPS
D-CS-M8581-0-RES	*	TERMINATORS

KL10-PV OPTION/ASSY

DOCUMENT NUMBER	REV	DESCRIPTION
B-DD-KL10-PV	A	DRAWING DIRECTORY KL10-PV
K-WL-KL10-PV-0	C	REDUCED WIRELIST(COMPUTER PRINTOUT)
D-SP-KL10-PV-2	A	OPTION SERIAL NO. CHART
C-SP-KL10-PV-7	*	KL10 DESKEW INFORMATION
A-SP-KL10-PV-6	*	DMA20 SETUP PROCEDURE
A-PL-KL10-PV-0	B	KL10-PV CPU LOGIC ASSY P.L.
E-UA-KL10-PV-0	B	KL10-PV CPU LOGIC ASSY U.A.
E-AD-7013271-0-0	A	WIRED ASSY CPU
E-AD-7009417-0	D	BACKPLANE ASSY #1
D-UA-5410839-0	C	BACKPLANE
E-AD-7009415-0	C	BACKPLANE ASSY #2
D-UA-5410680-0	A	BACKPLANE
E-AD-7009416-0	D	BACKPLANE ASSY #3
D-UA-5410681-0	A	BACKPLANE

NOTE: A REVISION DESIGNATED AS "*" REPRESENTS THE INITIAL RELEASE REVISION OF A DOCUMENT IN THE CASE WHERE THE INITIAL RELEASE REVISION WAS "-", "*" OR LEFT BLANK.

"THIS DRAWING AND SPECIFICATIONS, HEREIN, ARE THE PROPERTY OF DIGITAL EQUIPMENT CORPORATION AND SHALL NOT BE REPRODUCED OR COPIED OR USED IN WHOLE OR IN PART AS THE BASIS FOR THE MANUFACTURE OR SALE OF ITEMS WITHOUT WRITTEN PERMISSION. COPYRIGHT © 1980, DIGITAL EQUIPMENT CORPORATION"

REVISIONS		
CHK	CHANGE NO.	REV

DSK:KLPVTC.T2P[4,550] 15-AUG-80 08:47
FIRST USED ON OPTION/MODEL: KL10-PV

DRN: B. Looney DATE 15-AUG-80
CHK'D. DATE
ENG. DATE
BOARD LOCATION: N/A
SHEET 9 OF 9
NEXT HIGHER ASSEMBLY: NONE

TITLE: KL10-PV BASED SYSTEM

SIZE	CODE	NUMBER	REV.
D	TC	KL10-PV-4	C

"THIS DRAWING AND SPECIFICATIONS, HEREIN, ARE THE PROPERTY OF DIGITAL EQUIPMENT CORPORATION AND SHALL NOT BE REPRODUCED OR COPIED OR USED IN WHOLE OR IN PART AS THE BASIS FOR THE MANUFACTURE OR SALE OF ITEMS WITHOUT WRITTEN PERMISSION. COPYRIGHT © 1977, DIGITAL EQUIPMENT CORPORATION"

SEE NOTES 1&2&3

	1	2	3	4	5	6	7	8	9	10	11	12	13	14	15	16	17
A	BCIIA	BC20C	BC20C	TR0	TR0	TR0	MT0	MT0									
B	(M919)	(M9006)	(M9006)	E&C BUS TRAN	E&C BUS TRAN	E&C BUS TRAN	S BUS TRAN	S BUS TRAN	CHC	CRC	CCL	CCW		MB0	MB0	MB0	CH0
		S BUS	S BUS														
C	BC20C	BC20C	BC20C	M8516	M8516	M8516	M8519	M8519	M8533	M8535	M8536	M8534		M8517	M8517	M8517	*
	(M9006)	(M9006)	(M9006)														
D																	856
E	BC20C	SPARE	SPARE														
	(M9006)																
F																	

	19	20	21	22	23	24	25	26	27	28	29	30	31	32	33	34	35	36
A	CH0	MBZ	MBX	MBC	CSH	CH0	CH0		CHA	CHX	PMA	PAG	PIC	CLK	MTR	APR	CON	CTL
B																		
C	*	M8537	M8529YA	M8531YA	M8513YA	*	*		*	*	M8518YA	M8520YA	M8532	M6526YA	M8538	M8545	M8525	M8543
D	856			857		856	856		852	853	854	865						
E																		
F																		

	38	39	40	41	42	43	44	45	46	47	48	49	50	51	52	53	54
A	VMA	EDP	CRM	EDP	CRM	EDP	CRM	CRA	SHM	MCL	IRD	EDP	CRM	EDP	CRM	EDP	SCD
B																	
C	M8542	M8512	M8548	M8512	M8548	M8512	M8548	M8541	M8540	M8544	M8522	M8512	M8548	M8512	M8548	M6512	M6524
D																	
E																	
F																	

REF. PIN SIDE

* SEE MODULE VARIATION TABLE

VARIATION MODULE LOCATION CHART

SLOT	MODULE/VARIATION	
	NO CACHE	CACHE
17	M8549-YH	M8521
19	M8549-YH	M8521
24	M8549-YH	M8521
25	M8549-YH	M8521
27	M8549-YE	M8514
28	M8549-YF	M8515

NOTES:

1. SLOTS 2 & 3 (S BUS) BC20C CABLES FROM INTERNAL MEMORY, OR EMPTY.
2. SLOT 1 (E&C BUS) BCIIA & BC20C CABLES FROM DTE.
3. DMA20 SBUS CONNECTION TO SLOT 3 ONLY.

REVISIONS	CHANGE NO.	CHK	REV.

DRN. Pascarella	19JAN77	FIRST USED ON KL10-PV
CHK'D		digital
ENG.	12FEB77	TITLE MODULE UTILIZATION
PROJ. ENG.	12FEB77	
PROD.	12FEB77	
NEXT HIGHER ASSY. E-UA-KL10-PV-0		
SCALE —		SIZE D CODE MU NUMBER KL10-PV-CPU REV.
SHEET 1 OF 1		DIST.

REVISION CONTROL SHEET

CUSTOMER PRINT SET	MFG SET	DRAWING NO	NO OF SHT	DESCRIPTION	OPTION NO/FILE DATE	REVISIONS			
				MODULE REVISION		A	B	B	
		D-UA-M8512-Ø-Ø	5	DATA PATH		-	A	A1	
		D-CS-M8512-Ø-DPØ1	1	DATA PATH AR REGISTER		-	A	A	
		D-CS-M8512-Ø-DPØ2	1	DATA PATH ARX & MQ REGISTERS		-	A	A	
		D-CS-M8512-Ø-DPØ3	1	DATA PATH AD & ADX ADDERS		-	A	A	
		D-CS-M8512-Ø-DPØ4	1	DATA PATH EBUS, FM, BR, BRX		-	A	A	
		D-CS-M8512-Ø-DPØ5	1	DATA PATH POWER, GND, CAPS		-	A	B	
		D-CS-M8512-Ø-RES	2	DATA PATH TERMINATORS		-	A	A	
		K-CO-M8512-0-4	1	DATA PATH BOARD		C	C	C	
		D-AH-M8512-Ø-5	4	DATA PATH BOARD		B	B	B	3
		B-MH-M8512-Ø-6	1	MODULE ECO HISTORY		-	A	B	
		5010376		ETCH CIRCUIT BOARD		C	C	C	SHEET
		POO-M8512-ØØ		PROCESS SHEET (REF ONLY)		-	-	-	
								REWORK VERSION	SEE
								RELAYOUT VERSION	
					ECO NO	ORIG.	00001	00002	

CUSTOMER PRINT SET CODES

X = PRINT OF DOCUMENT INCLUDED IN PRINT SET
C = INCLUDES ALL PRINTS INDICATED ON DOCUMENT
S = CONFIDENTIAL AUTHORIZED SIGNATURE REQUIRED

TITLE		SIZE	CODE	NUMBER	REV
DATA PATH BOARD	SHEET 2 OF 3	B	DD	M8512-Ø	B

MR

11

THIS DRAWING AND SPECIFICATIONS, HEREIN, ARE THE PROPERTY OF DIGITAL EQUIPMENT CORPORATION AND SHALL NOT BE REPRODUCED OR COPIED OR USED IN WHOLE OR IN PART AS THE BASIS FOR THE MANUFACTURE OR SALE OF ITEMS WITHOUT WRITTEN PERMISSION. COPYRIGHT © 1974 DIGITAL EQUIPMENT CORPORATION

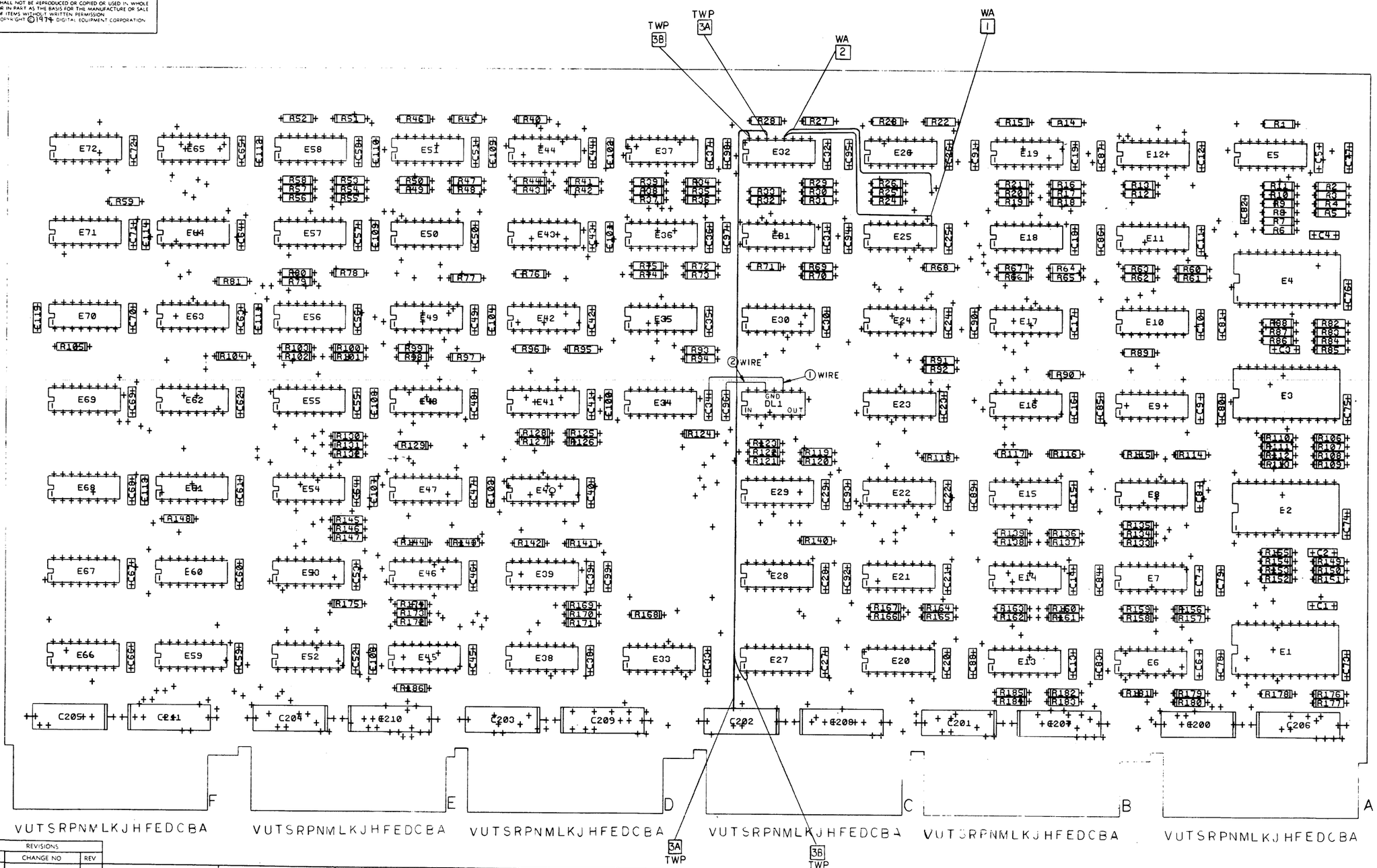

REVISIONS		
CHK	CHANGE NO	REV

TITLE	SIZE	CODE	NUMBER	REV.
DATA PATH BOARD	D	UA	M8512-Ø-Ø	A1
SCALE 2/1 SHEET 2 OF 5	DIST.			

MR

12

SIZE	CODE	NUMBER	REV.
B	DD	M8512-0	B

DRAWING NO.	NO. OF SHTS.	PART NO.	DESCRIPTION	(NEW LAYOUT VERSION) REVISIONS
			MODULE REVISION	C
D-UA-M8512-Ø-Ø	5		DATA PATH	B
D-CS-M8512-Ø-DPØ1	1		DATA PATH AR REGISTER	A
D-CS-M8512-Ø-DPØ2	1		DATA PATH ARX & MQ REGISTERS	A
D-CS-M8512-Ø-DPØ3	1		DATA PATH AD & ADX ADDERS	A
D-CS-M8512-Ø-DPØ4	1		DATA PATH EBUS FM, BR, BRX	A
D-CS-M8512-Ø-DPØ5	1		DATA PATH POWER, GND, CAPS	B
D-CS-M8512-Ø-RES	2		DATA PATH TERMINATORS	A
K-CO-M8512-4	1		DATA PATH BOARD	D
D-AH-M8512-5	4		DATA PATH BOARD	C
B-MH-M8512-6	1		MODULE ECO HISTORY	B
5010376			ETCH CIRCUIT BOARD	D
P00-M8512-ØØ			PROCESS SHEET (REF ONLY)	-

NOTES:

REVISIONS	
REV.	B
CHG NO.	00002
DATE	

"THIS DRAWING AND SPECIFICATIONS, HEREIN, ARE THE PROPERTY OF DIGITAL EQUIPMENT CORPORATION AND SHALL NOT BE REPRODUCED OR COPIED OR USED IN WHOLE OR IN PART AS THE BASIS FOR THE MANUFACTURE OR SALE OF ITEMS WITHOUT WRITTEN PERMISSION.

COPYRIGHT© 1977 DIGITAL EQUIPMENT CORPORATION

digital

USED ON OPTION/MODEL

DRN.	H Demarmore	9-1-77
CHK'D		
ENG.		
PROD.		

TITLE DATA PATH BOARD

SIZE	CODE	NUMBER	REV.
B	DD	M8512-Ø	B

SHEET 3 OF 3

13

DRB 126

MR

THIS DRAWING AND SPECIFICATIONS, HEREIN, ARE THE PROPERTY OF DIGITAL EQUIPMENT CORPORATION AND SHALL NOT BE REPRODUCED OR COPIED OR USED IN WHOLE OR IN PART AS THE BASIS FOR THE MANUFACTURE OR SALE OF ITEMS WITHOUT WRITTEN PERMISSION.
COPYRIGHT © 1977 DIGITAL EQUIPMENT CORPORATION

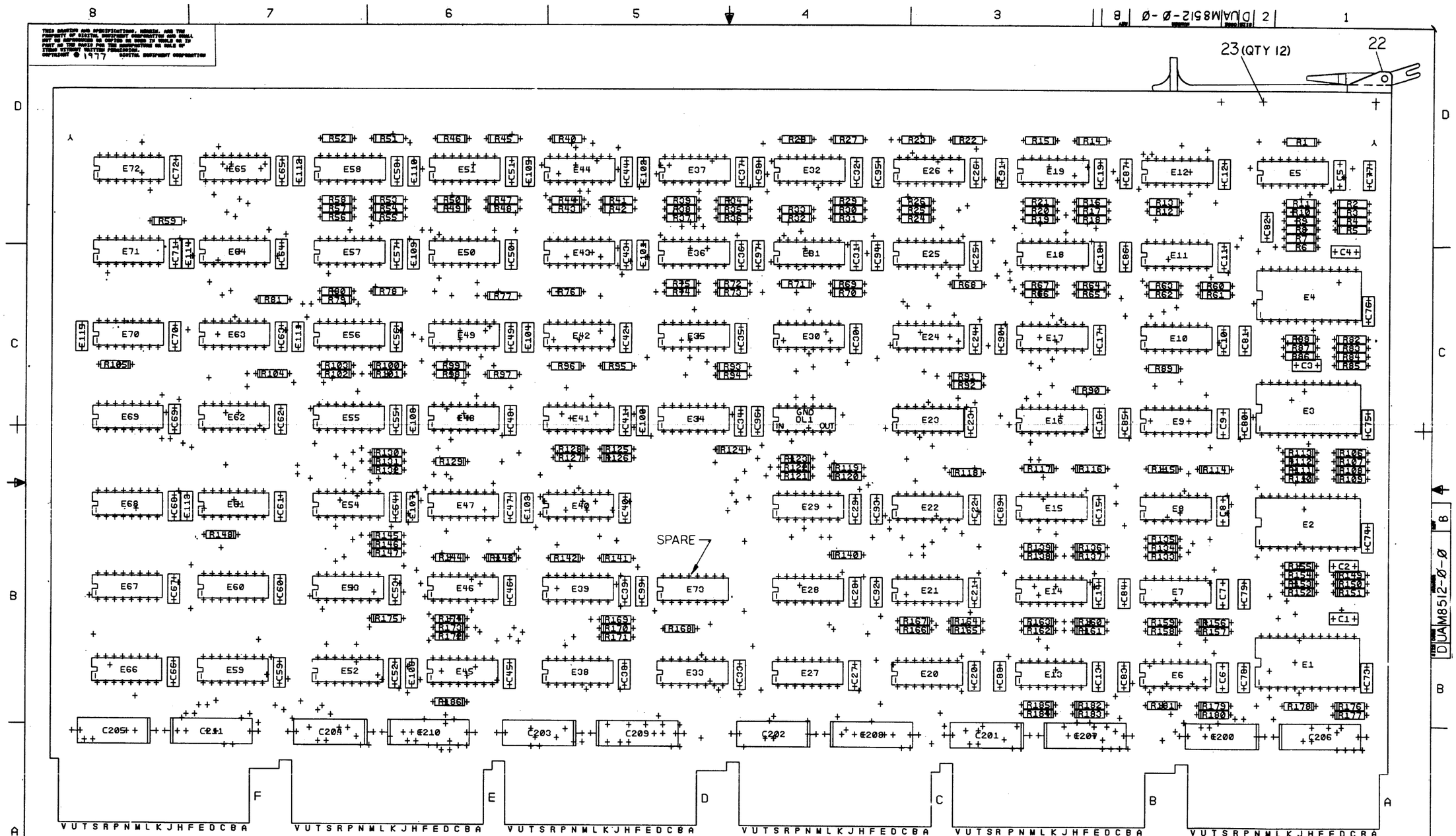

NOTES:

REV	CHANGE NO	CHK

ETCH REV. D
P.C. DESIGN DATA BASE REV. D

SIGNATURES	DATE
DRN. K. Yamasaki	2/1977
CHK'D. R.W. Cowan	2 Mar 77
ENG. E. Cabe	3/4/77
PROJ.ENG. E. Cabe	3/4/77
PROD. W. Bailey	3/4/77

digital

TITLE DATA PATH BOARD

SIZE	CODE	NUMBER	REV
D	UA	M8512-Ø-Ø	B

SCALE 2/1
SHT. 2 OF 5
NEXT HIGHER ASSY. B-DD-M8512-Ø

MR 1 MS# 104469

14

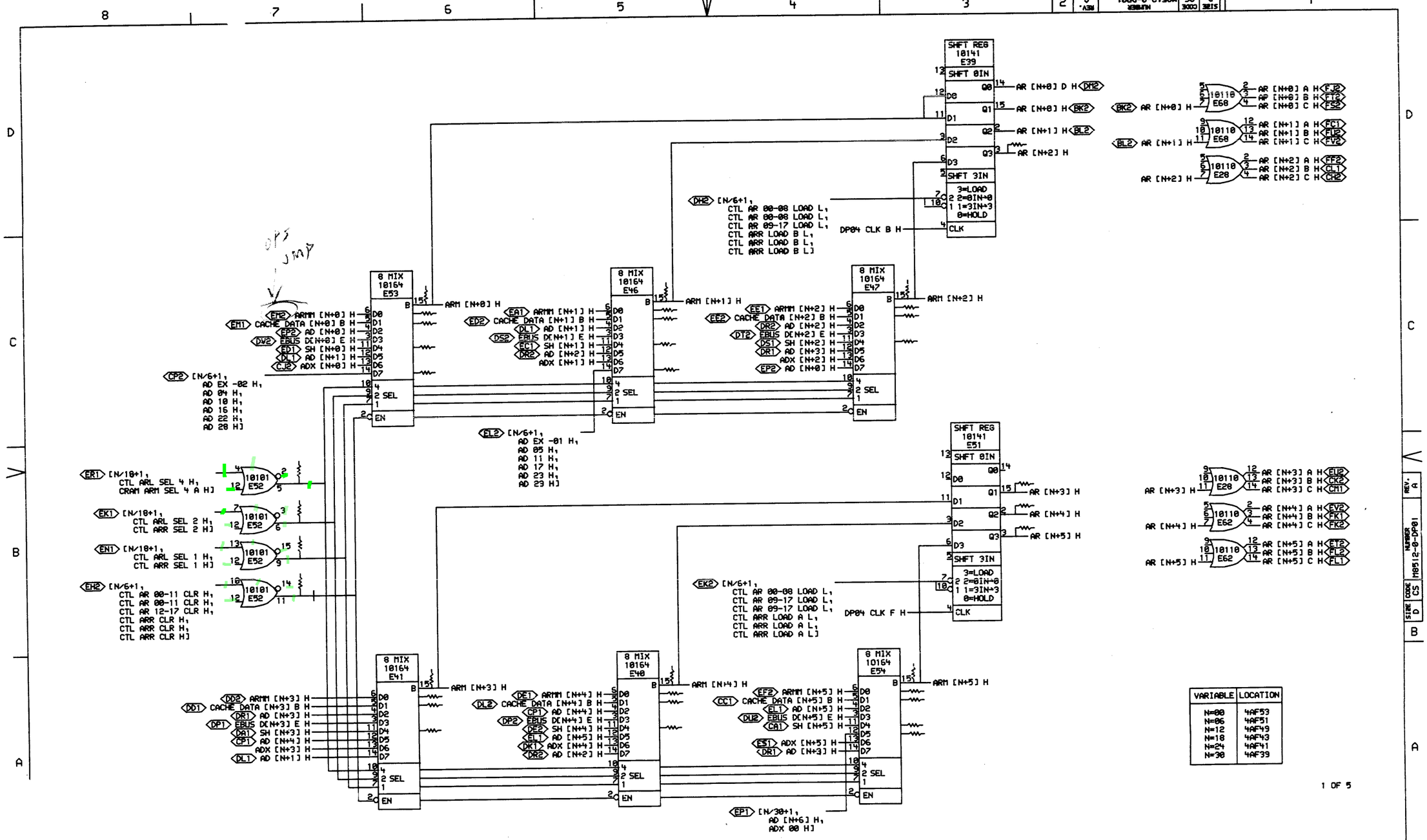

VARIABLE	LOCATION
N=00	4AF53
N=06	4AF51
N=12	4AF49
N=18	4AF43
N=24	4AF41
N=30	4AF39

REVISIONS		
CHK	CHANGE NO.	REV
-	M8512-00001	A

"NS, HEREIN, ARE THE
"PORATION AND SHALL
"D IN WHOLE OR IN
"TURE OR SALE OF
CORPORATION"

digital

EDPTEX.RVA(4,120) 18-OCT-76 22:06

FIRST USED ON OPTION/MODEL: KL10

DRN. T. Loosley DATE 21-OCT-76
CHK. Tom Egge DATE 21 Oct 76
ENG. Tom Egge DATE 21 Oct 76
BOARD LOCATION:
SHEET 1 OF 1
NEXT HIGHER ASSEMBLY: B-DD-M8512-0

TITLE: DATA PATH AR REGISTER

SIZE	CODE	NUMBER	REV.
D	CS	M8512-0-DP01	A

MR

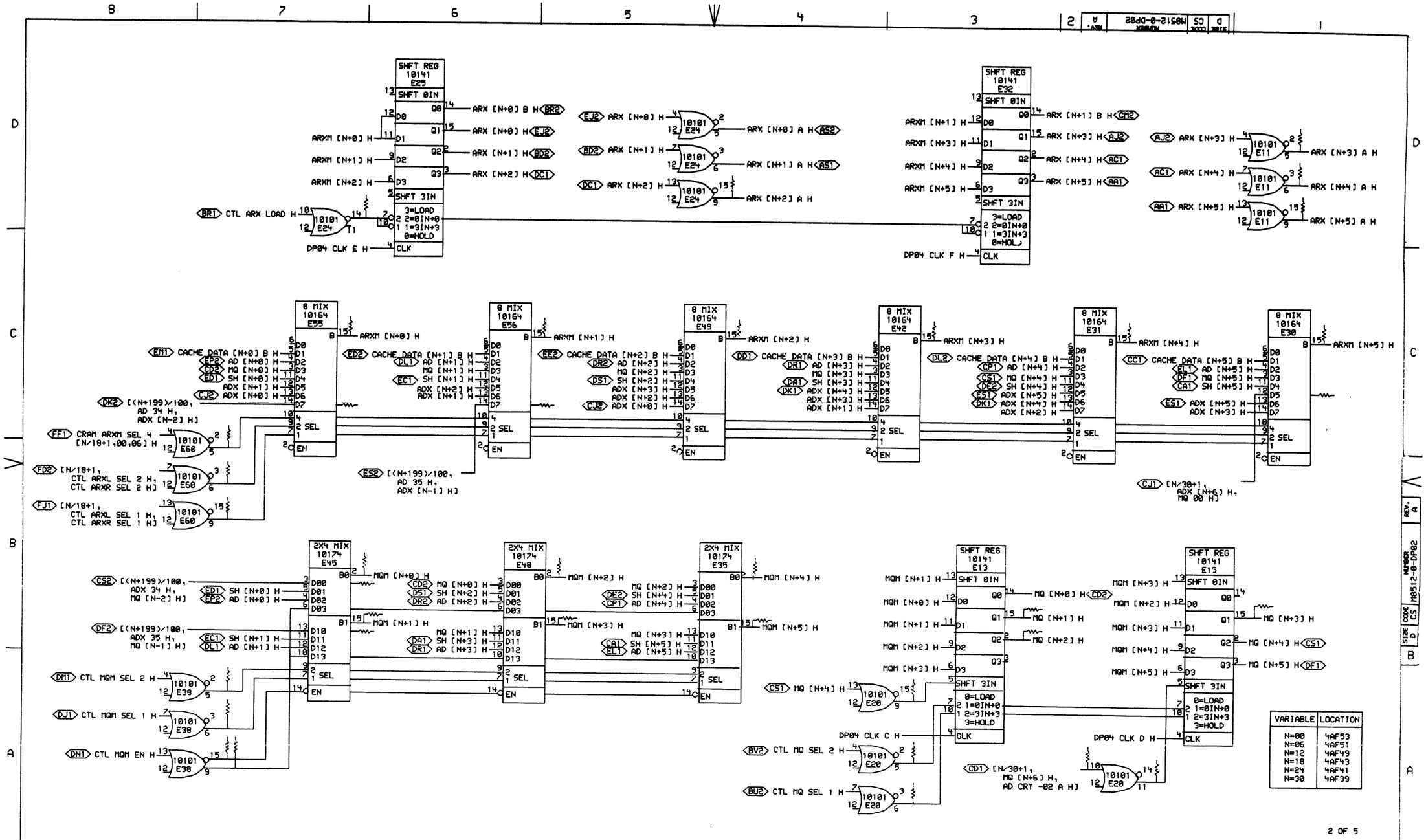

VARIABLE	LOCATION
N=00	4AF53
N=06	4AF51
N=12	4AF49
N=18	4AF43
N=24	4AF41
N=30	4AF39

"THIS DRAWING AND SPECIFICATIONS, HEREIN, ARE THE PROPERTY OF DIGITAL EQUIPMENT CORPORATION AND SHALL NOT BE REPRODUCED OR COPIED OR USED IN WHOLE OR IN PART AS THE BASIS FOR THE MANUFACTURE OR SALE OF ITEMS WITHOUT WRITTEN PERMISSION. COPYRIGHT © 1976, DIGITAL EQUIPMENT CORPORATION"

REVISIONS		
CHK	CHANGE NO.	REV
–	M8512-00001	A
	J. EGGERS	

digital

DRN: J. Loomis DATE 21-OCT-76 ENG: Tom Eggers DATE 21 Oct 76
CHK: Tom Eggers DATE 21 Oct 76 BOARD LOCATION: SHEET 1 OF 1
EDP2EX.RVAL4,120] 19-OCT-76 12:43 NEXT HIGHER ASSEMBLY:
FIRST USED ON OPTION/MODEL: KL10 B-DD-M8512-0

TITLE: DATA PATH ARX & MQ REGISTERS

SIZE	CODE	NUMBER	REV.
D	CS	M8512-0-DP02	A

MF

16

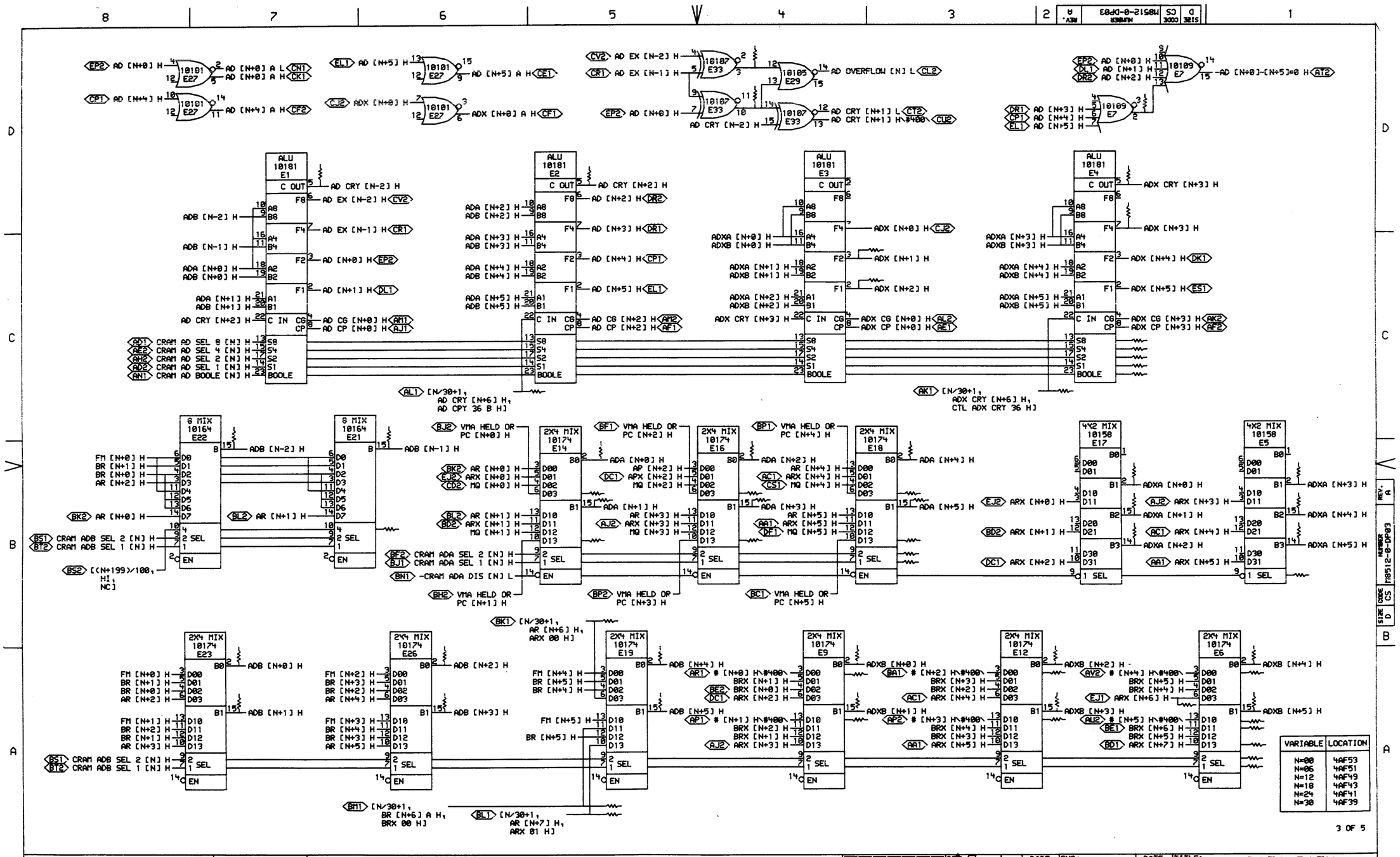
ALU 10181 E1
ALU 10181 E2
ALU 10181 E3
ALU 10181 E4
8 MIX 10164 E22
8 MIX 10164 E21
2X4 MIX 10174 E14
2X4 MIX 10174 E16
2X4 MIX 10174 E18
4X2 MIX 10158 E17
4X2 MIX 10158 E5
2X4 MIX 10174 E23
2X4 MIX 10174 E26
2X4 MIX 10174 E19
2X4 MIX 10174 E9
2X4 MIX 10174 E12
2X4 MIX 10174 E6
VARIABLE | LOCATION
N=00 | 4AF53
N=06 | 4AF51
N=12 | 4AF49
N=18 | 4AF43
N=24 | 4AF41
N=30 | 4AF39
3 OF 5
"THIS DRAWING AND SPECIFICATIONS, HEREIN, ARE THE PROPERTY OF DIGITAL EQUIPMENT CORPORATION AND SHALL NOT BE REPRODUCED OR COPIED OR USED IN WHOLE OR IN PART AS THE BASIS FOR THE MANUFACTURE OR SALE OF ITEMS WITHOUT WRITTEN PERMISSION.
COPYRIGHT © 1976, DIGITAL EQUIPMENT CORPORATION"
REVISIONS
CHK | CHANGE NO. | REV
- | M8512-00001 | A
EDP3EX.RVA(4,120) 18-OCT-76 22:31
FIRST USED ON OPTION/MODEL: KL10
NEXT HIGHER ASSEMBLY: B-DD-M8512-0
TITLE: DATA PATH AD & ADX ADDERS
SIZE D | CODE CS | NUMBER M8512-0-DP03 | REV. A

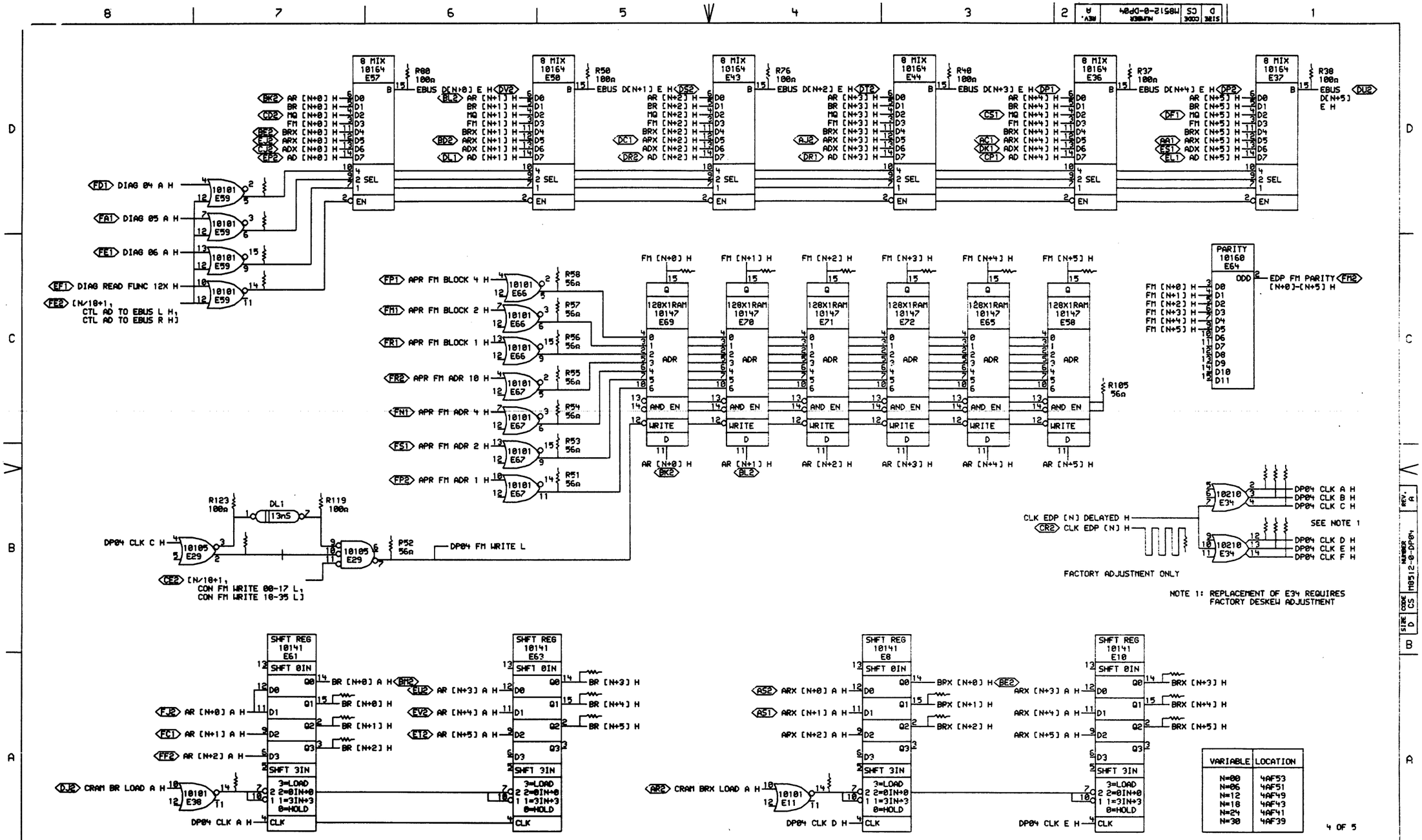

NOTE 1: REPLACEMENT OF E34 REQUIRES FACTORY DESKEW ADJUSTMENT

VARIABLE	LOCATION
N=00	4AF53
N=06	4AF51
N=12	4AF49
N=18	4AF43
N=24	4AF41
N=30	4AF39

4 OF 5

"THIS DRAWING AND SPECIFICATIONS, HEREIN, ARE THE PROPERTY OF DIGITAL EQUIPMENT CORPORATION AND SHALL NOT BE REPRODUCED OR COPIED OR USED IN WHOLE OR IN PART AS THE BASIS FOR THE MANUFACTURE OR SALE OF ITEMS WITHOUT WRITTEN PERMISSION. COPYRIGHT © 1976, DIGITAL EQUIPMENT CORPORATION"

REVISIONS		
CHK	CHANGE NO.	REV
-	M8512-00001	A

EDP4EX.RVA(4,120) 18-OCT-76 22:41

FIRST USED ON OPTION/MODEL: KL10

DRN. DATE 21-OCT-76 ENG. DATE 21 Oct 76 CHK'D. DATE 21 Oct 76

BOARD LOCATION: SHEET 1 OF 1

NEXT HIGHER ASSEMBLY: B-DD-M8512-0

TITLE: DATA PATH EBUS, FM, BR, BR.

SIZE	CODE	NUMBER	REV.
D	CS	M8512-0-DP04	A

MR 1

10

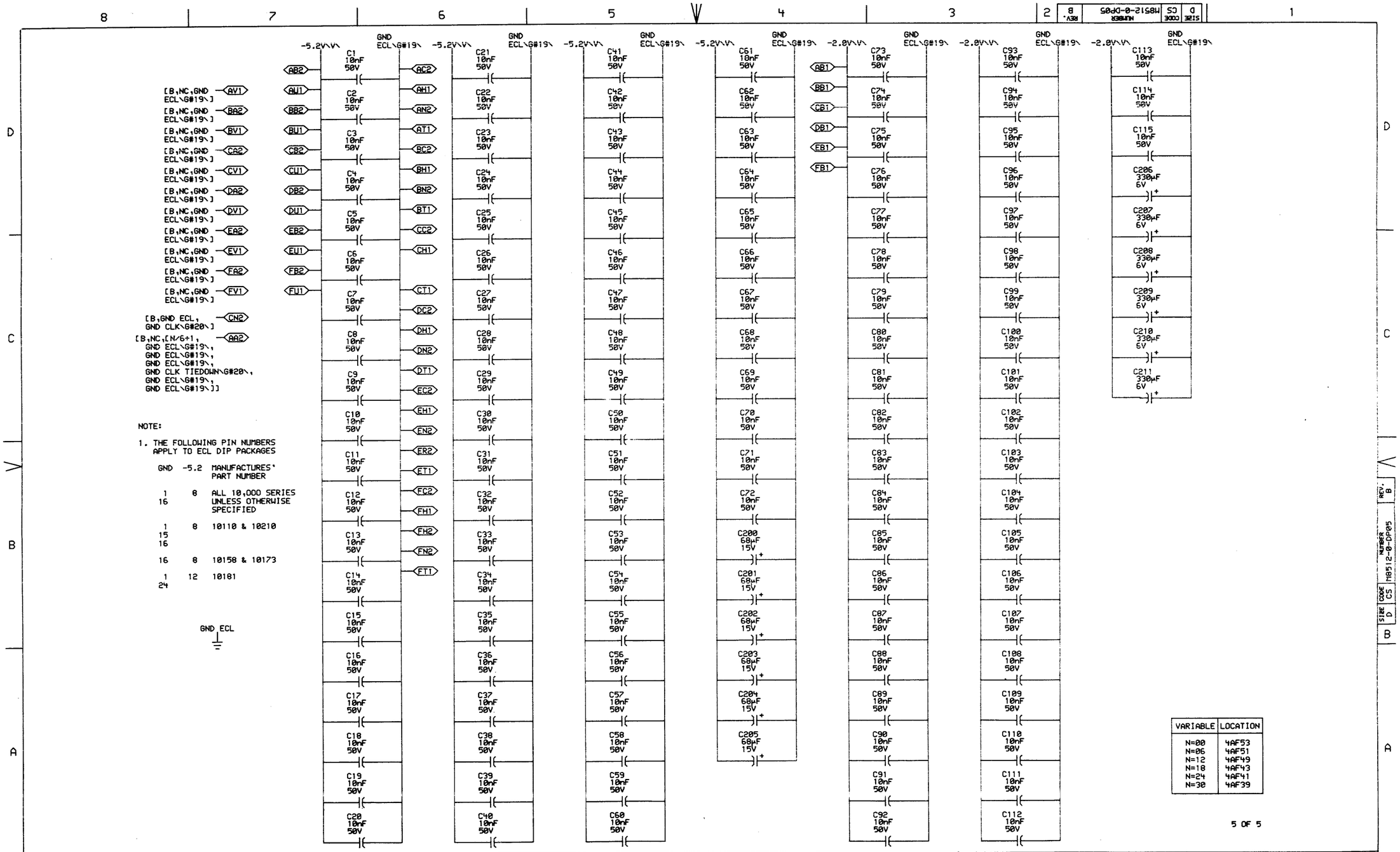
[B,NC,GND ECL\G#19\] AV1
[B,NC,GND ECL\G#19\] BA2
[B,NC,GND ECL\G#19\] BV1
[B,NC,GND ECL\G#19\] CA2
[B,NC,GND ECL\G#19\] CV1
[B,NC,GND ECL\G#19\] DA2
[B,NC,GND ECL\G#19\] DV1
[B,NC,GND ECL\G#19\] EA2
[B,NC,GND ECL\G#19\] EV1
[B,NC,GND ECL\G#19\] FA2
[B,NC,GND ECL\G#19\] FV1
[B,GND ECL, GND CLK\G#20\] CN2
[B,NC,[N/6+1, GND ECL\G#19\, GND ECL\G#19\, GND ECL\G#19\, GND CLK TIEDOWN\G#20\, GND ECL\G#19\, GND ECL\G#19\]] AA2
-5.2V\V\
GND ECL\G#19\
-2.0V\V\
AB2 AU1 BB2 BU1 CB2 CU1 DB2 DU1 EB2 EU1 FB2 FU1
AC2 AH1 AN2 AT1 BC2 BH1 BN2 BT1 CC2 CH1 CT1 DC2 DH1 DN2 DT1 EC2 EH1 EN2 ER2 ET1 FC2 FH1 FH2 FN2 FT1
AB1 BB1 CB1 DB1 EB1 FB1
C1 C2 C3 C4 C5 C6 C7 C8 C9 C10 C11 C12 C13 C14 C15 C16 C17 C18 C19 C20 C21 C22 C23 C24 C25 C26 C27 C28 C29 C30 C31 C32 C33 C34 C35 C36 C37 C38 C39 C40 C41 C42 C43 C44 C45 C46 C47 C48 C49 C50 C51 C52 C53 C54 C55 C56 C57 C58 C59 C60 C61 C62 C63 C64 C65 C66 C67 C68 C69 C70 C71 C72 C73 C74 C75 C76 C77 C78 C79 C80 C81 C82 C83 C84 C85 C86 C87 C88 C89 C90 C91 C92 C93 C94 C95 C96 C97 C98 C99 C100 C101 C102 C103 C104 C105 C106 C107 C108 C109 C110 C111 C112 C113 C114 C115
10nF 50V
C200 C201 C202 C203 C204 C205 68µF 15V
C206 C207 C208 C209 C210 C211 330µF 6V
GND ECL
NOTE:
1. THE FOLLOWING PIN NUMBERS APPLY TO ECL DIP PACKAGES
GND -5.2 MANUFACTURES' PART NUMBER
1 16 8 ALL 10,000 SERIES UNLESS OTHERWISE SPECIFIED
1 15 16 8 10110 & 10210
16 8 10158 & 10173
1 24 12 10181
VARIABLE LOCATION
N=00 4AF53
N=06 4AF51
N=12 4AF49
N=18 4AF43
N=24 4AF41
N=30 4AF39
5 OF 5
SIZE D CODE CS NUMBER M8512-0-DP05 REV. B
"THIS DRAWING AND SPECIFICATIONS, HEREIN, ARE THE PROPERTY OF DIGITAL EQUIPMENT CORPORATION AND SHALL NOT BE REPRODUCED OR COPIED OR USED IN WHOLE OR IN PART AS THE BASIS FOR THE MANUFACTURE OR SALE OF ITEMS WITHOUT WRITTEN PERMISSION.
COPYRIGHT © 1977, DIGITAL EQUIPMENT CORPORATION"
REVISIONS
CHK CHANGE NO. REV
M8512-00002 B
T.EGGERS
digital
DRN. DATE 16-JUN-77
ENG. DATE 22 June 77
CHK. DATE
BOARD LOCATION:
SHEET 1 OF 1
EDP5EX.DRW[4,536] 19-JUN-77 10:18
NEXT HIGHER ASSEMBLY: B-DD-M8512-0
FIRST USED ON OPTION/MODEL: KL10
TITLE: DATA PATH POWER, GND, CAPS
SIZE D CODE CS NUMBER M8512-0-DP05 REV. B

19

RESISTOR LOC(PIN)	SHOWN ON DRW#	REF	VALUE	TERMINATES SIGNAL
R119(1)	DP04	B7	100Ω	%DL1(7)
R135(1)	DP04	A4	68Ω	%E11(14)
R139(1)	DP02	A2	68Ω	%E20(11)
R136(1)	DP02	A3	68Ω	%E20(5)
R137(1)	DP02	A3	68Ω	%E20(6)
R105(1)	DP02	A3	68Ω	%E20(9)
R27(1)	DP02	D6	68Ω	%E24(14)
R120(1)	DP04	B7	68Ω	%E29(2)
R123(1)	DP04	B7	100Ω	%E29(3)
R122(1)	DP03	D4	68Ω	%E33(10)
R121(1)	DP03	D4	68Ω	%E33(3)
R81(1)	DP04	A7	68Ω	%E38(14)
R74(1)	DP02	A7	68Ω	%E38(15)
R73(1)	DP02	A7	68Ω	%E38(5)
R93(1)	DP02	A7	68Ω	%E38(6)
R94(1)	DP02	A7	68Ω	%E38(9)
R127(1)	DP01	B7	68Ω	%E52(11)
R95(1)	DP01	B7	68Ω	%E52(5)
R126(1)	DP01	B7	68Ω	%E52(6)
R125(1)	DP01	B7	68Ω	%E52(9)
R105(1)	DP04	C2	56Ω	%E58(13)
R75(1)	DP04	C7	68Ω	%E59(14)
R35(1)	DP04	D7	68Ω	%E59(5)
R34(1)	DP04	D7	68Ω	%E59(6)
R72(1)	DP04	C7	68Ω	%E59(9)
R31(1)	DP02	B7	68Ω	%E60(5)
R30(1)	DP02	B7	68Ω	%E60(6)
R69(1)	DP02	B7	68Ω	%E60(9)
R58(1)	DP04	C5	56Ω	%E66(5)
R57(1)	DP04	C5	56Ω	%E66(6)
R56(1)	DP04	C5	56Ω	%E66(9)
R51(1)	DP04	B5	56Ω	%E67(11)
R55(1)	DP04	C5	56Ω	%E67(5)
R54(1)	DP04	C5	56Ω	%E67(6)
R53(1)	DP04	B5	56Ω	%E67(9)
R133(1)	DP03	D2	68Ω	%E7(2)
R115(1)	DP03	A4	68Ω	# [N+0] H\#400\
R89(1)	DP03	A4	68Ω	# [N+1] H\#400\
R12(1)	DP03	A2	68Ω	# [N+2] H\#400\
R13(1)	DP03	A2	68Ω	# [N+3] H\#400\

RESISTOR LOC(PIN)	SHOWN ON DRW#	REF	VALUE	TERMINATES SIGNAL
R181(1)	DP03	A1	68Ω	# [N+4] H\#400\
R159(1)	DP03	A1	68Ω	# [N+5] H\#400\
R155(1)	DP03	D5	68Ω	AD CRY [N+2] H
R168(1)	DP03	D7	68Ω	AD CRY [N-2] H
R176(1)	DP03	B5	68Ω	ADA [N+0] H
R152(1)	DP03	B5	68Ω	ADA [N+1] H
R150(1)	DP03	B4	68Ω	ADA [N+2] H
R108(1)	DP03	B4	68Ω	ADA [N+3] H
R109(1)	DP03	B3	68Ω	ADA [N+4] H
R112(1)	DP03	B3	68Ω	ADA [N+5] H
R154(1)	DP03	A7	68Ω	ADB [N+0] H
R153(1)	DP03	A7	68Ω	ADB [N+1] H
R149(1)	DP03	A6	68Ω	ADB [N+2] H
R151(1)	DP03	A6	68Ω	ADB [N+3] H
R110(1)	DP03	A5	68Ω	ADB [N+4] H
R111(1)	DP03	A5	68Ω	ADB [N+5] H
R177(1)	DP03	B6	68Ω	ADB [N-1] H
R178(1)	DP03	B7	68Ω	ADB [N-2] H
R88(1)	DP03	D2	68Ω	ADX CRY [N+3] H
R174(1)	DP03	C3	68Ω	ADX [N+1] H
R129(1)	DP03	C3	68Ω	ADX [N+2] H
R43(1)	DP03	D2	68Ω	ADX [N+3] H
R106(1)	DP03	B2	68Ω	ADXA [N+0] H
R85(1)	DP03	B2	68Ω	ADXA [N+1] H
R87(1)	DP03	B2	68Ω	ADXA [N+2] H
R82(1)	DP03	B1	68Ω	ADXA [N+3] H
R11(1)	DP03	B1	68Ω	ADXA [N+4] H
R10(1)	DP03	B1	68Ω	ADXA [N+5] H
R107(1)	DP03	A4	68Ω	ADXB [N+0] H
R84(1)	DP03	A4	68Ω	ADXB [N+1] H
R86(1)	DP03	A2	68Ω	ADXB [N+2] H
R83(1)	DP03	A2	68Ω	ADXB [N+3] H
R8(1)	DP03	A1	68Ω	ADXB [N+4] H
R9(1)	DP03	A1	68Ω	ADXB [N+5] H
R59(1)	DP01	D3	68Ω	AR [N+2] H
R148(1)	DP01	B3	68Ω	AR [N+3] H
R66(1)	DP01	B3	68Ω	AR [N+4] H
R104(1)	DP01	B3	68Ω	AR [N+5] H
R142(1)	DP01	C6	68Ω	ARM [N+0] H
R169(1)	DP01	C5	68Ω	ARM [N+1] H

RESISTOR LOC(PIN)	SHOWN ON DRW#	REF	VALUE	TERMINATES SIGNAL
R170(1)	DP01	C3	68Ω	ARM [N+2] H
R46(1)	DP01	A6	68Ω	ARM [N+3] H
R45(1)	DP01	A5	68Ω	ARM [N+4] H
R47(1)	DP01	A3	68Ω	ARM [N+5] H
R175(1)	DP01	C6	68Ω	ARMM [N+0] H
R173(1)	DP01	C5	68Ω	ARMM [N+1] H
R143(1)	DP01	C3	68Ω	ARMM [N+2] H
R128(1)	DP01	A6	68Ω	ARMM [N+3] H
R141(1)	DP01	A5	68Ω	ARMM [N+4] H
R145(1)	DP01	A3	68Ω	ARMM [N+5] H
R114(1)	DP02	D4	68Ω	ARX [N+2] A H
R62(1)	DP02	D1	68Ω	ARX [N+3] A H
R61(1)	DP02	D1	68Ω	ARX [N+4] A H
R60(1)	DP02	D1	68Ω	ARX [N+5] A H
R160(1)	DP03	A2	68Ω	ARX [N+6] H
R157(1)	DP03	A1	68Ω	ARX [N+7] H
R24(1)	DP02	C7	68Ω	ARXM [N+0] H
R23(1)	DP02	C5	68Ω	ARXM [N+1] H
R68(1)	DP02	C4	68Ω	ARXM [N+2] H
R26(1)	DP02	C3	68Ω	ARXM [N+3] H
R29(1)	DP02	C2	68Ω	ARXM [N+4] H
R33(1)	DP02	C1	68Ω	ARXM [N+5] H
R166(1)	DP04	A7	68Ω	BR [N+0] H
R167(1)	DP04	A7	68Ω	BR [N+1] H
R92(1)	DP04	A7	68Ω	BR [N+2] H
R22(1)	DP04	A5	68Ω	BR [N+3] H
R20(1)	DP04	A5	68Ω	BR [N+4] H
R18(1)	DP04	A5	68Ω	BR [N+5] H
R48(1)	DP04	A3	68Ω	BRX [N+1] H
R42(1)	DP04	A3	68Ω	BRX [N+2] H
R41(1)	DP04	A2	68Ω	BRX [N+3] H
R36(1)	DP04	A2	68Ω	BRX [N+4] H
R30(1)	DP04	A2	68Ω	BRX [N+5] H
R158(1)	DP03	A1	68Ω	BRX [N+6] H
R130(1)	DP01	C6	68Ω	CACHE DATA [N+0] B H
R100(1)	DP01	C5	68Ω	CACHE DATA [N+1] B H
R99(1)	DP01	C3	68Ω	CACHE DATA [N+2] B H
R96(1)	DP01	A6	68Ω	CACHE DATA [N+3] B H
R71(1)	DP01	A5	68Ω	CACHE DATA [N+4] B H
R146(1)	DP01	A3	68Ω	CACHE DATA [N+5] B H

RESISTOR LOC(PIN)	SHOWN ON DRW#	REF	VALUE	TERMINATES SIGNAL
R124(1)	DP04	B2	68Ω	CLK EDP [N] H
R6(1)	DP03	C2	68Ω	CRAM AD BOOLE [N] H
R3(1)	DP03	C2	68Ω	CRAM AD SEL 1 [N] H
R5(1)	DP03	C2	68Ω	CRAM AD SEL 2 [N] H
R4(1)	DP03	C2	68Ω	CRAM AD SEL 4 [N] H
R2(1)	DP03	C2	68Ω	CRAM AD SEL 8 [N] H
R1(1)	DP03	B1	68Ω	CRAM ADA DIS [N] H
R64(1)	DP03	B3	68Ω	CRAM ADA SEL 1 [N] H
P17(1)	DP03	B3	68Ω	CRAM ADA SEL 2 [N] H
P179(1)	DP03	A1	68Ω	CRAM ADB SEL 1 [N] H
R156(1)	DP03	A1	68Ω	CRAM ADB SEL 2 [N] H
R148(1)	DP04	B1	68Ω	DP04 CLK A H
R171(1)	DP04	B1	68Ω	DP04 CLK B H
R184(1)	DP04	B1	68Ω	DP04 CLK C H
R134(1)	DP04	B1	68Ω	DP04 CLK D H
R63(1)	DP04	B1	68Ω	DP04 CLK E H
R49(1)	DP04	B1	68Ω	DP04 CLK F H
R52(1)	DP04	B6	56Ω	-DP04 FM WRITE H
R80(1)	DP04	D6	100Ω	EBUS D[N+0] E H
R50(1)	DP04	D5	100Ω	EBUS D[N+1] E H
R76(1)	DP04	D4	100Ω	EBUS D[N+2] E H
R40(1)	DP04	D3	100Ω	EBUS D[N+3] E H
R37(1)	DP04	D2	100Ω	EBUS D[N+4] E H
R38(1)	DP04	D1	100Ω	EBUS D[N+5] E H
R164(1)	DP04	C5	68Ω	FM [N+0] H
R91(1)	DP04	C4	68Ω	FM [N+1] H
R26(1)	DP04	C4	68Ω	FM [N+2] H
R23(1)	DP04	C3	68Ω	FM [N+3] H
R19(1)	DP04	C3	68Ω	FM [N+4] H
R21(1)	DP04	C2	68Ω	FM [N+5] H
R103(1)	DP02	B3	68Ω	MQ [N+1] H
R98(1)	DP02	B3	68Ω	MQ [N+2] H
R44(1)	DP02	B1	68Ω	MQ [N+3] H
R183(1)	DP02	B6	68Ω	MQM [N+0] H
R162(1)	DP02	B6	68Ω	MQM [N+1] H
R161(1)	DP02	B5	68Ω	MQM [N+2] H
R182(1)	DP02	B5	68Ω	MQM [N+3] H
R116(1)	DP02	B4	68Ω	MQM [N+4] H
R138(1)	DP02	B4	68Ω	MQM [N+5] H
R101(1)	DP01	C6	68Ω	SH [N+0] H

NOTE:

1. ALL TERMINATORS HAVE PIN TWO CONNECTED TO -2.0V AND ARE 5% 1/4WATT UNLESS OTHERWISE SPECIFIED
2. ENTRIES ARE SORTED BY SIGNAL NAME
3. % INDICATES OUTPUT OF DIP LOC AND ( ) INDICATES PIN NUMBER

"THIS DRAWING AND SPECIFICATIONS, HEREIN, ARE THE PROPERTY OF DIGITAL EQUIPMENT CORPORATION AND SHALL NOT BE REPRODUCED OR COPIED OR USED IN WHOLE OR IN PART AS THE BASIS FOR THE MANUFACTURE OR SALE OF ITEMS WITHOUT WRITTEN PERMISSION.
COPYRIGHT © 1976, DIGITAL EQUIPMENT CORPORATION"

REVISIONS

CHK	CHANGE NO.	REV
	M8512-00001	A
	19 Nov 77	
	CHEGERS	

digital

DRN. C Smith DATE 20-OCT-76 ENG. Tom Egan DATE 21 Oct 76
CHK. Tom Egan DATE 21 Oct 76 BOARD LOCATION: SHEET 1 OF 2
M85121.RVAC4,1201 20-OCT-76 20:08 NEXT HIGHER ASSEMBLY: B-DD-M8512-3
FIRST USED ON OPTION/MODEL: KL10

TITLE: DATA PATH TERMINATORS

SIZE	CODE	NUMBER	REV.
D	CS	M8512-0-RES	A

MR 1

20

RESISTOR LOC(PIN)	SHOWN ON DRW#	REF	VALUE	TERMINATES SIGNAL
R78(1)	DP01	C5	68Ω	SH [N+1] H
R77(1)	DP01	C3	68Ω	SH [N+2] H
R97(1)	DP01	A6	68Ω	SH [N+3] H
R32(1)	DP01	A5	68Ω	SH [N+4] H
R131(1)	DP01	A3	68Ω	SH [N+5] H
R163(1)	DP03	B5	68Ω	VMA HELD OR PC [N+0] H
R160(1)	DP03	B5	68Ω	VMA HELD OR PC [N+1] H
R117(1)	DP03	B4	68Ω	VMA HELD OR PC [N+2] H
R90(1)	DP03	B4	68Ω	VMA HELD OR PC [N+3] H
R67(1)	DP03	B3	68Ω	VMA HELD OR PC [N+4] H
R65(1)	DP03	B3	68Ω	VMA HELD OR PC [N+5] H
R102(1)	DP02	C7	68Ω	[(N+199)/100, AD 34 H, ADX [N-2] H]
R79(1)	DP02	C5	68Ω	[(N+199)/100, AD 35 H, ADX [N-1] H]
R186(1)	DP02	B7	68Ω	[(N+199)/100, ADX 34 H, MQ [N-2] H]
R172(1)	DP02	B7	68Ω	[(N+199)/100, ADX 35 H, MQ [N-1] H]
R118(1)	DP03	B6	68Ω	[(N+199)/100, HI, NC]
R113(1)	DP03	C5	68Ω	[N/30+1, AD CRY [N+6] H, AD CRY 36 B H]
R132(1)	DP01	A3	68Ω	[N/30+1, AD [N+6] H, ADX 00 H]
R7(1)	DP03	C2	68Ω	[N/30+1, ADX CRY [N+6] H, CTL ADX CRY 36 H]
R70(1)	DP02	C1	68Ω	[N/30+1, ADX [N+6] H, MQ 00 H]
R16(1)	DP03	B5	68Ω	[N/30+1, AR [N+6] H, ARX 00 H]
R14(1)	DP03	A5	68Ω	[N/30+1, AR [N+7] H, ARX 01 H]
R15(1)	DP03	A5	68Ω	[N/30+1, BR [N+6] A H, BRX 00 H]
R165(1)	DP02	A2	68Ω	[N/30+1, MQ [N+6] H, AD CRY -02 A H]
R144(1)	DP01	C5	68Ω	[N/6+1, AD EX -01 H, AD 05 H, AD 11 H, AD 17 H, AD 23 H, AD 29 H]
R147(1)	DP01	C6	68Ω	[N/6+1, AD EX -02 H, AD 04 H, AD 10 H, AD 16 H, AD 22 H, AD 28 H]

NOTE:

1. ALL TERMINATORS HAVE PIN TWO CONNECTED TO -2.0V AND ARE 5% 1/4WATT UNLESS OTHERWISE SPECIFIED
2. ENTRIES ARE SORTED BY SIGNAL NAME
3. % INDICATES OUTPUT OF DIP LOC AND
   () INDICATES PIN NUMBER

"THIS DRAWING AND SPECIFICATIONS, HEREIN, ARE THE PROPERTY OF DIGITAL EQUIPMENT CORPORATION AND SHALL NOT BE REPRODUCED OR COPIED OR USED IN WHOLE OR IN PART AS THE BASIS FOR THE MANUFACTURE OR SALE OF ITEMS WITHOUT WRITTEN PERMISSION.
COPYRIGHT © 1976, DIGITAL EQUIPMENT CORPORATION"

REVISIONS		
CHK	CHANGE NO.	REV

DRN. C. Smith DATE 20-OCT-76 ENG. Tom Eggen DATE 21 OCT 76
CHK. Tom Eggen DATE 21 OCT 76 BOARD LOCATION: SHEET 2 OF 2
M85122.RVA[4,120] 20-OCT-76 20:08 NEXT HIGHER ASSEMBLY:
FIRST USED ON OPTION/MODEL: KL10 B-DD-M8512-0

TITLE: DATA PATH TERMINATORS

SIZE	CODE	NUMBER	REV.
D	CS	M8512-0-RES	A

MR

21

SIZE	CODE	NUMBER	REV.
B	DD	M8513-YA	A

DRAWING NO.	NO. OF SHTS	PART NO.	DESCRIPTION	REVISIONS	
			MODULE REVISION	A	B
D-UA-M8513-YA-Ø	5		CACHE CONTROL	-	A
D-CS-M8513-YA-CSH1	1		CSH CYC REQ PRI & TYPE, CSH IDLE	-	A
D-CS-M8513-YA-CSH2	1		MBOX RESP, EBOX MINOR CYC TYPE	-	-
D-CS-M8513-YA-CSH3	1		ANY VAL MATCH & HOLD, ANY WR	-	A
D-CS-M8513-YA-CSH4	1		CSH EBOX T(N), PAGE FAIL T (N)	-	-
D-CS-M8513-YA-CSH5	1		PAGE REFILL T(N) CSH & CHAN T(N)	-	-
D-CS-M8513-YA-CSH6	1		PF HOLD, CCA CTL, CSH WR CTL	-	A
D-CS-M8513-YA-CSH7	1		CSH DIAG MIX,CSH PERF SIGNALS	-	-
D-CS-M8513-YA-CSH8	1		CACHE CONTROL POWER,GND,CAP	-	A
D-CS-M8513-YA-RES	2		CACHE CONTROL TERMINATORS	-	A
D-AH-M8513-Ø-5	4		CACHE CONTROL	C	C
		5010528	ETCH CIRCUIT BOARD	D	D
M8513-Ø-L			P.C. DESIGN DATA BASE	REF	REF
M8513-YA-PL			INSERTION P/L DATA BASE	REF	REF
POO-M8513-YA			PROCESS SHEETS	REF	REF

NOTES:

REVISIONS		
DATE	CHG NO.	REV.
4-77	00001	A

"THIS DRAWING AND SPECIFICATIONS, HEREIN, ARE THE PROPERTY OF DIGITAL EQUIPMENT CORPORATION AND SHALL NOT BE REPRODUCED OR COPIED OR USED IN WHOLE OR IN PART AS THE BASIS FOR THE MANUFACTURE OR SALE OF ITEMS WITHOUT WRITTEN PERMISSION.
COPYRIGHT © 1976, DIGITAL EQUIPMENT CORPORATION"

digital

USED ON OPTION/MODEL
KL1Ø-DA,DB
KLIØ-EA,EB
KLIØ-PV

DRN.	M. Pascarella	11 OCT 76
CHK'D	M. Offranell	11 OCT 76
ENG.	John O Allen	5 JAN 77
PROD.	W. Embry	5 JAN 77

TITLE: CACHE CONTROL

SIZE	CODE	NUMBER	REV.
B	DD	M8513-YA	A

SHEET 1 OF 1

DRB 126 EN-01149-16-N176(325)

MR 22

"THIS DRAWING AND SPECIFICATIONS, HEREIN, ARE THE PROPERTY OF DIGITAL EQUIPMENT CORPORATION AND SHALL NOT BE REPRODUCED OR COPIED OR USED IN WHOLE OR IN PART AS THE BASIS FOR THE MANUFACTURE OR SALE OF ITEMS WITHOUT WRITTEN PERMISSION. COPYRIGHT © 1976 DIGITAL EQUIPMENT CORPORATION"

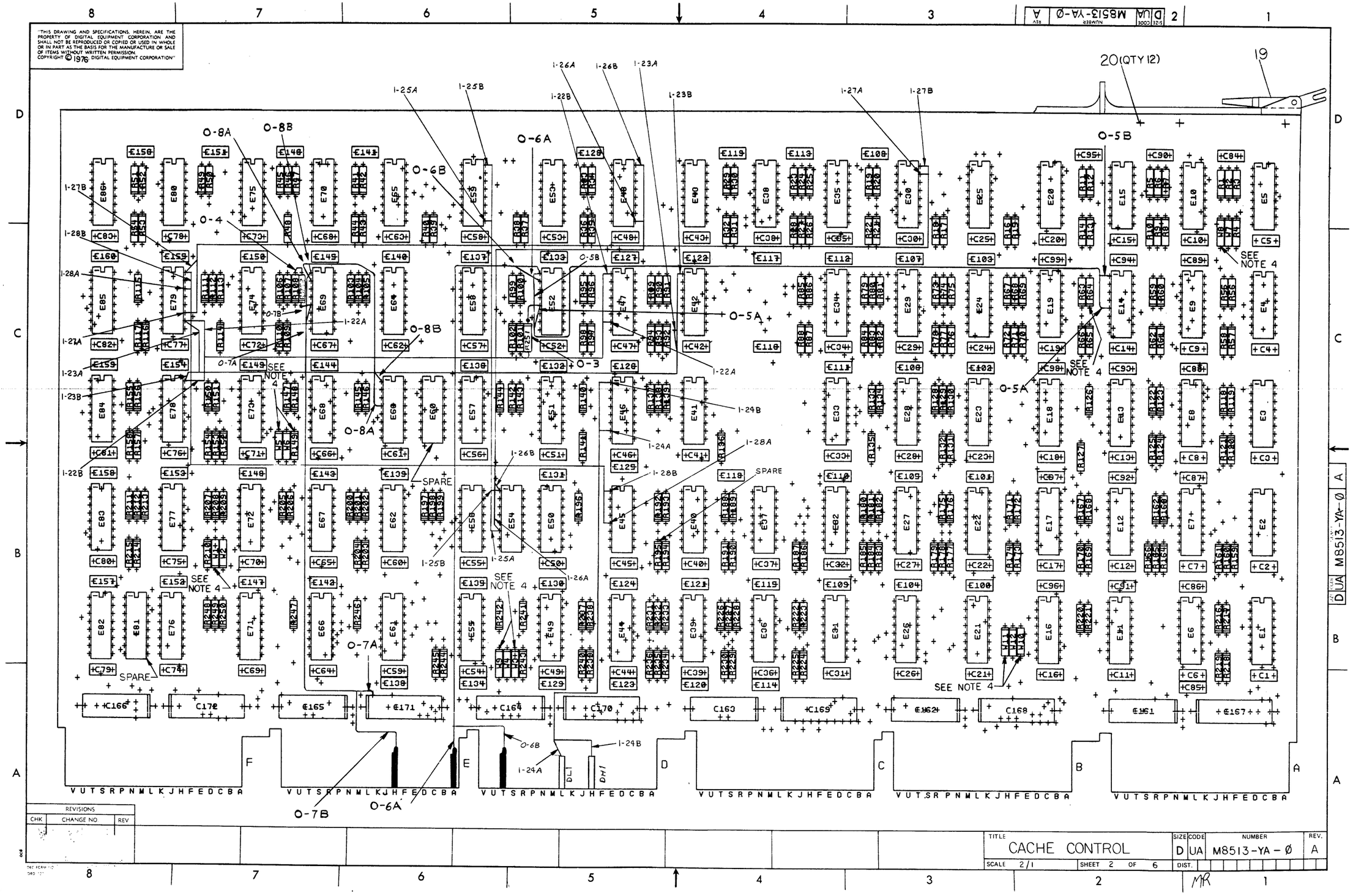

REVISIONS		
CHK	CHANGE NO	REV

TITLE	SIZE	CODE	NUMBER	REV.
CACHE CONTROL	D	UA	M8513-YA-Ø	A
SCALE 2/1	SHEET 2 OF 6	DIST.		

23

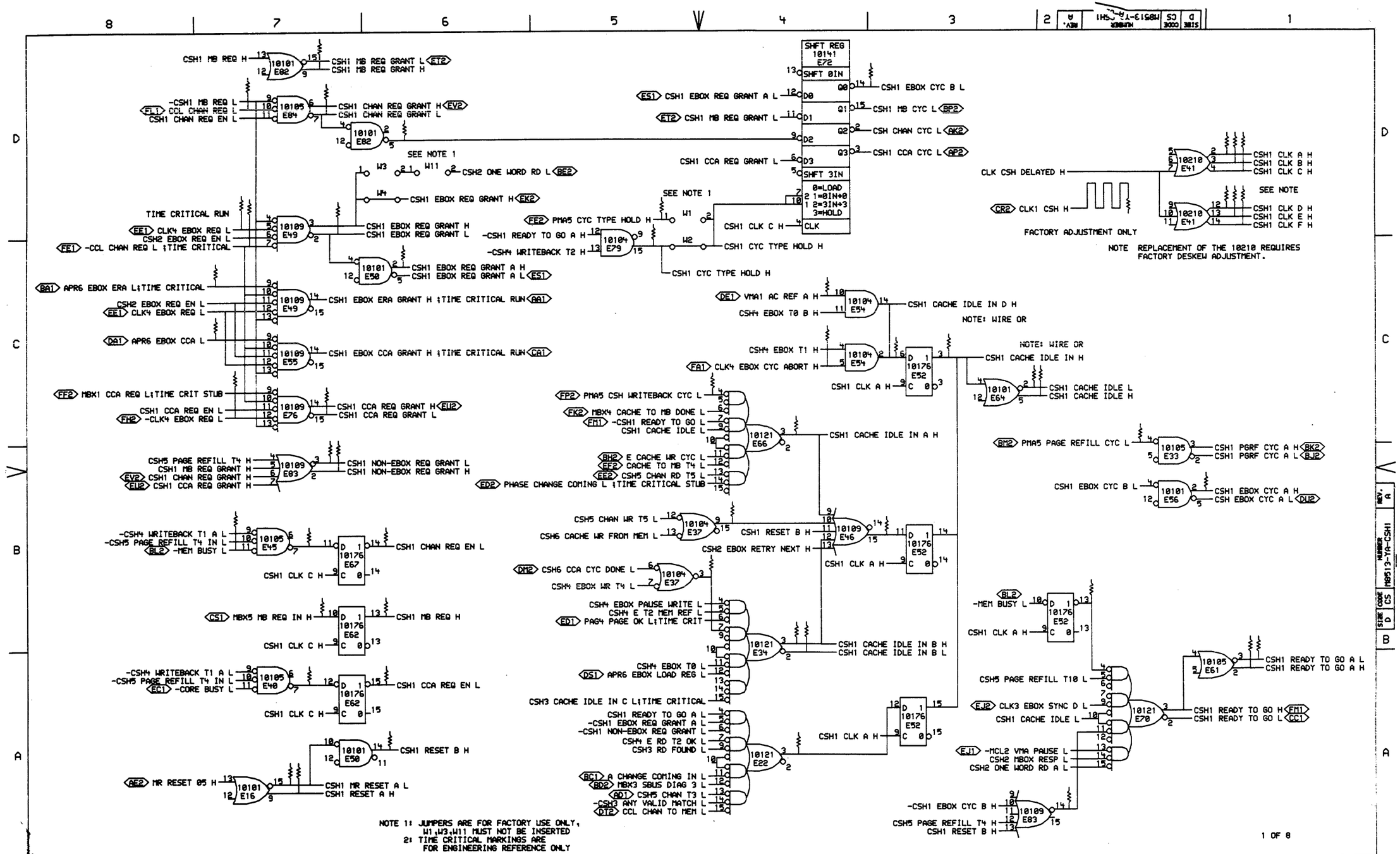

NOTE 1: JUMPERS ARE FOR FACTORY USE ONLY, W1,W3,W11 MUST NOT BE INSERTED
2: TIME CRITICAL MARKINGS ARE FOR ENGINEERING REFERENCE ONLY

DRAWING AND SPECIFICATIONS, HEREIN, ARE THE ... OF DIGITAL EQUIPMENT CORPORATION AND SHALL ... PRODUCED OR COPIED OR USED IN WHOLE OR IN ... THE BASIS FOR THE MANUFACTURE OR SALE OF ... WRITTEN PERMISSION. ©, DIGITAL EQUIPMENT CORPORATION"

REVISIONS		
CHK	CHANGE NO.	REV
	M8513-YA-00006	A
	28 APR 77	
	J. ALLEN	
	2-Mar-77	

digital

DRN. J. Loosley DATE 30-MAR-77 ENG. DATE
CHK'D DATE
CSH1EF.DRW[4,540] 29-MAR-77 10:55 BOARD LOCATION: UAF23 SHEET 1 OF 1
FIRST USED ON OPTION/MODEL: KL10 NEXT HIGHER ASSEMBLY: B-DD-M8513-YA

TITLE: CSH CYC REQ PRI & TYPE, CSH IDLE

SIZE	CODE	NUMBER	REV.
D	CS	M8513-YA-CSH1	A

MK

24

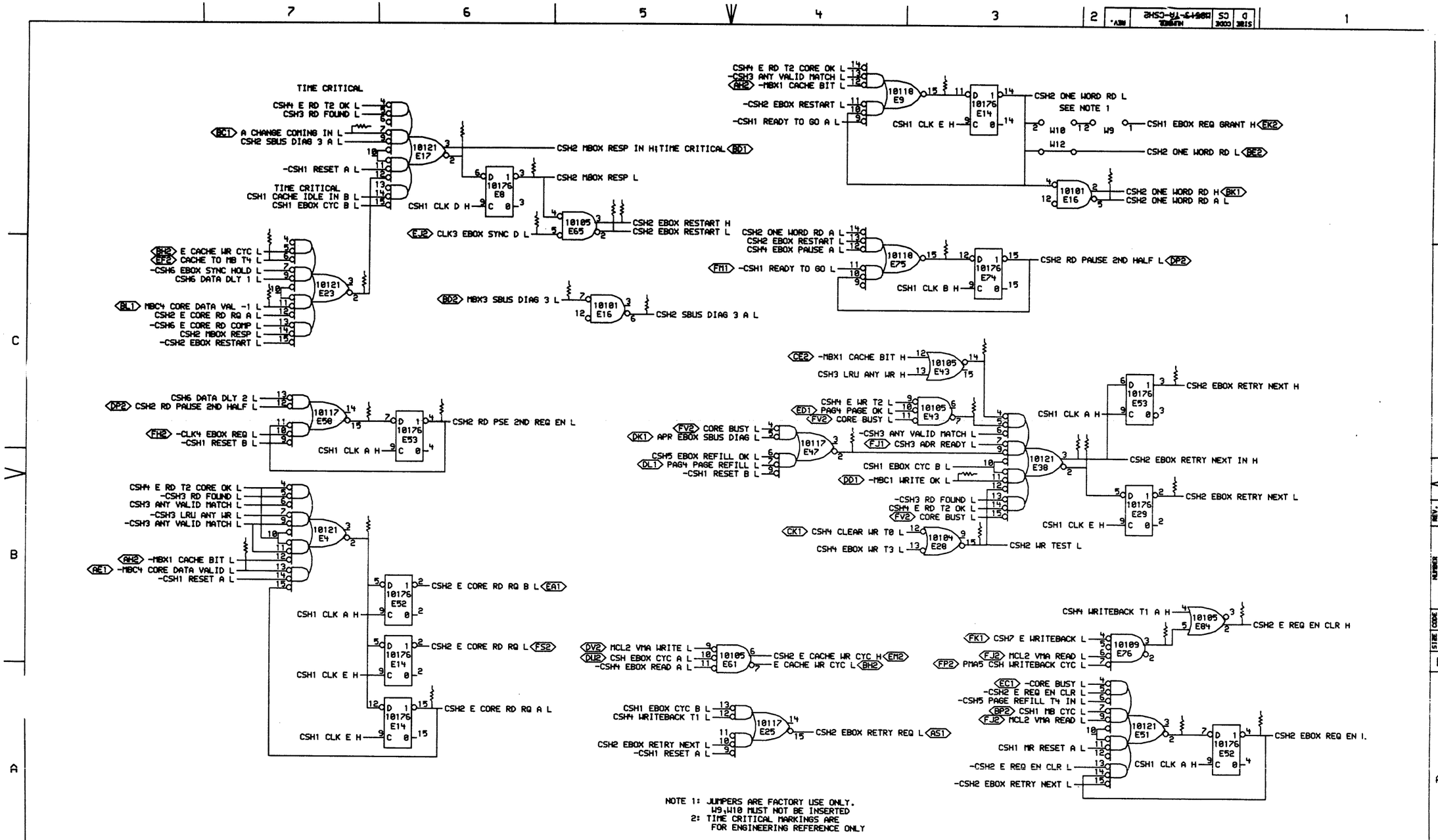

"THIS DRAWING AND SPECIFICATIONS, HEREIN, ARE THE PROPERTY OF DIGITAL EQUIPMENT CORPORATION AND SHALL NOT BE REPRODUCED OR COPIED OR USED IN WHOLE OR IN PART AS THE BASIS FOR THE MANUFACTURE OR SALE OF ITEMS WITHOUT WRITTEN PERMISSION. COPYRIGHT © 1976, DIGITAL EQUIPMENT CORPORATION"

REVISIONS		
CHK	CHANGE NO.	REV

digital

DRN. Lowry DATE 08-NOV-76 ENG. J. Allen DATE 15 Dec 76
CHK. W. Stephenson DATE 11/9/76 BOARD LOCATION: 4AF23 SHEET 1 OF 1
CSH2EF.DRW[4,175] 09-NOV-76 09:59 NEXT HIGHER ASSEMBLY: B-DD-M8513-YA
FIRST USED ON OPTION/MODEL: KL10

TITLE: MBOX RESP, EBOX MINOR CYC TYPE

SIZE	CODE	NUMBER	REV.
D	CS	M8513-YA-CSH2	

25

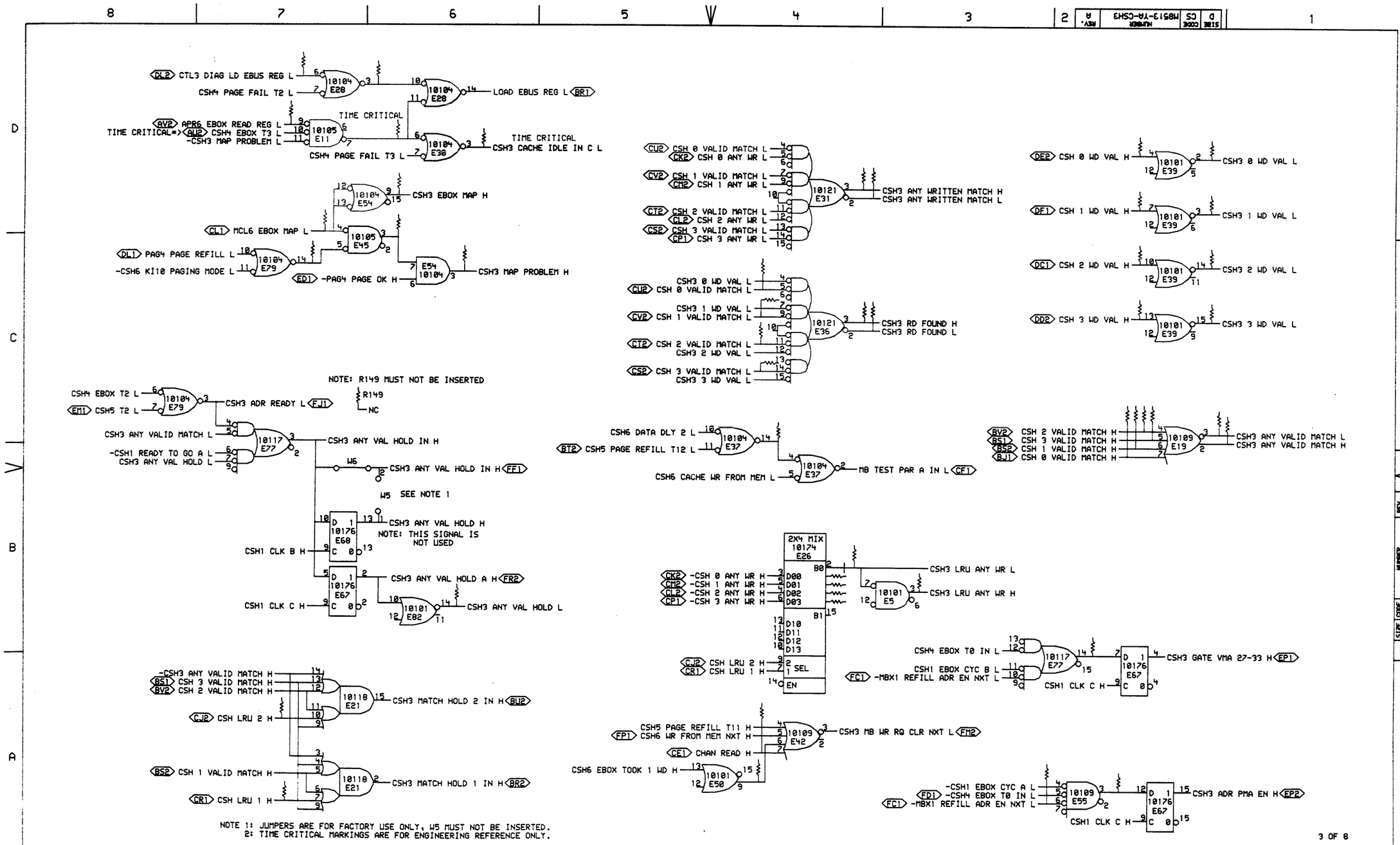

NOTE 1: JUMPERS ARE FOR FACTORY USE ONLY, W5 MUST NOT BE INSERTED.
2: TIME CRITICAL MARKINGS ARE FOR ENGINEERING REFERENCE ONLY.

"THIS DRAWING AND SPECIFICATIONS, HEREIN, ARE THE PROPERTY OF DIGITAL EQUIPMENT CORPORATION AND SHALL NOT BE REPRODUCED OR COPIED OR USED IN WHOLE OR IN PART AS THE BASIS FOR THE MANUFACTURE OR SALE OF ITEMS WITHOUT WRITTEN PERMISSION.
COPYRIGHT © 1977, DIGITAL EQUIPMENT CORPORATION"

REVISIONS		
CHK	CHANGE NO.	REV
	M8513-YA-00001	A

digital

DRN. D. Looney DATE 01-APR-77 ENG. John D. Allen DATE 4 Apr 77
CHK'D Eddie Lemma DATE 4/4/77 BOARD LOCATION: 4AF23
SHEET 1 OF 1
CSH3EF.DRW[4,540] 01-APR-77 16:22 NEXT HIGHER ASSEMBLY:
FIRST USED ON OPTION/MODEL: KL10 B-DD-M8513-YA

TITLE: ANY VAL MATCH & HOLD, ANY WR

SIZE	CODE	NUMBER	REV.
D	CS	M8513-YA-CSH3	A

26

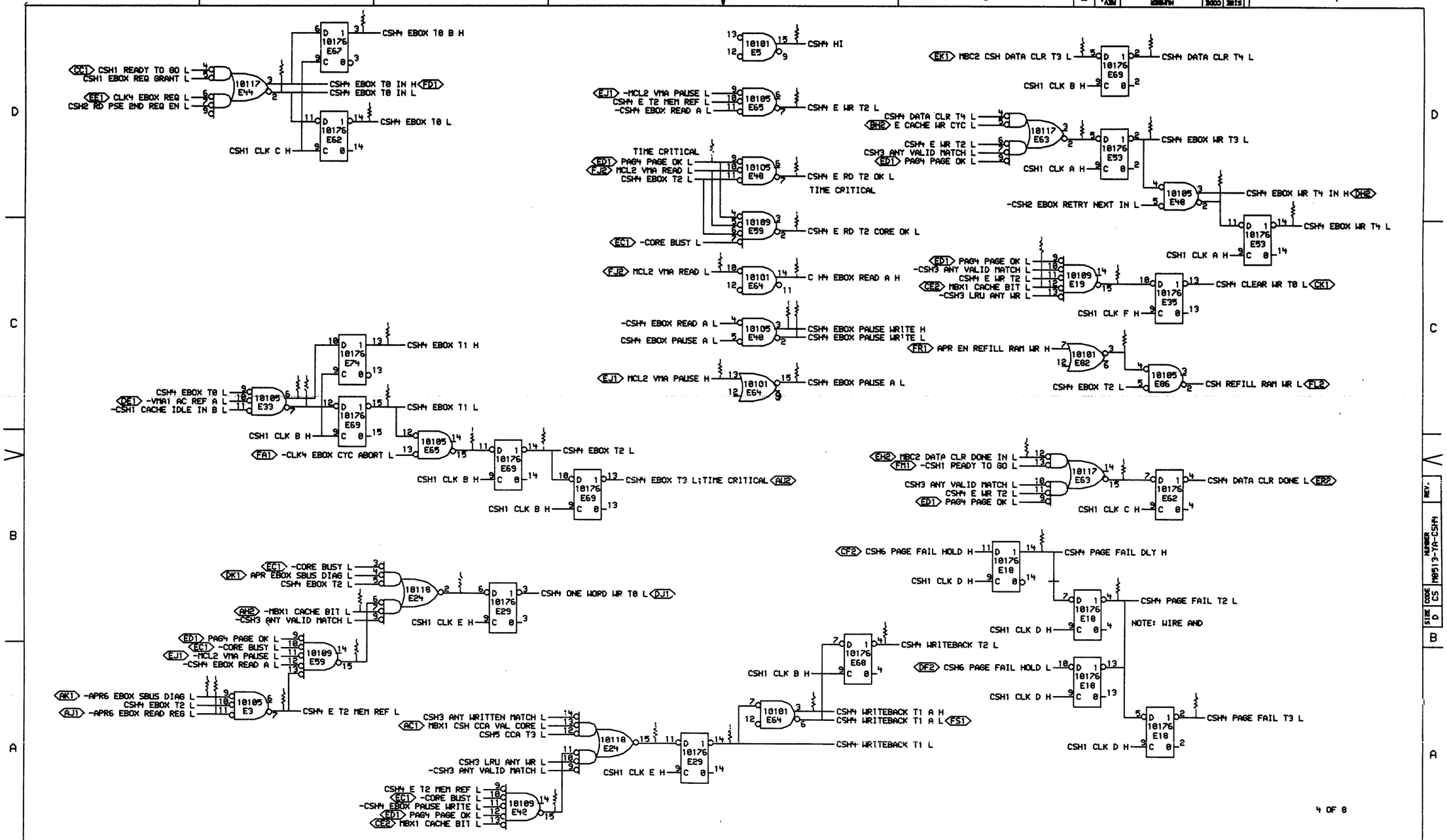

NOTE: TIME CRITICAL MARKINGS ARE FOR ENGINEERING REFERENCE ONLY.

"THIS DRAWING AND SPECIFICATIONS, HEREIN, ARE THE PROPERTY OF DIGITAL EQUIPMENT CORPORATION AND SHALL NOT BE REPRODUCED OR COPIED OR USED IN WHOLE OR IN PART AS THE BASIS FOR THE MANUFACTURE OR SALE OF ITEMS WITHOUT WRITTEN PERMISSION. COPYRIGHT © 1976, DIGITAL EQUIPMENT CORPORATION"

REVISIONS		
CHK	CHANGE NO.	REV

digital

DRN. | DATE 08-NOV-76 | ENG. | DATE 15 Dec 76
CHK. | DATE 09-NOV-76 | BOARD LOCATION: 4AF23
C:HHEF.DRW[4,175] 09-NOV-76 08:23 | SHEET 1 OF 1 | NEXT HIGHER ASSEMBLY:
FIRST USED ON OPTION/MODEL: KL10 | B-DD-M8513-YA

TITLE: CSH EBOX T(N), PAGE FAIL T(N)

SIZE	CODE	NUMBER	REV.
D	CS	M8513-YA-CSH4	

27

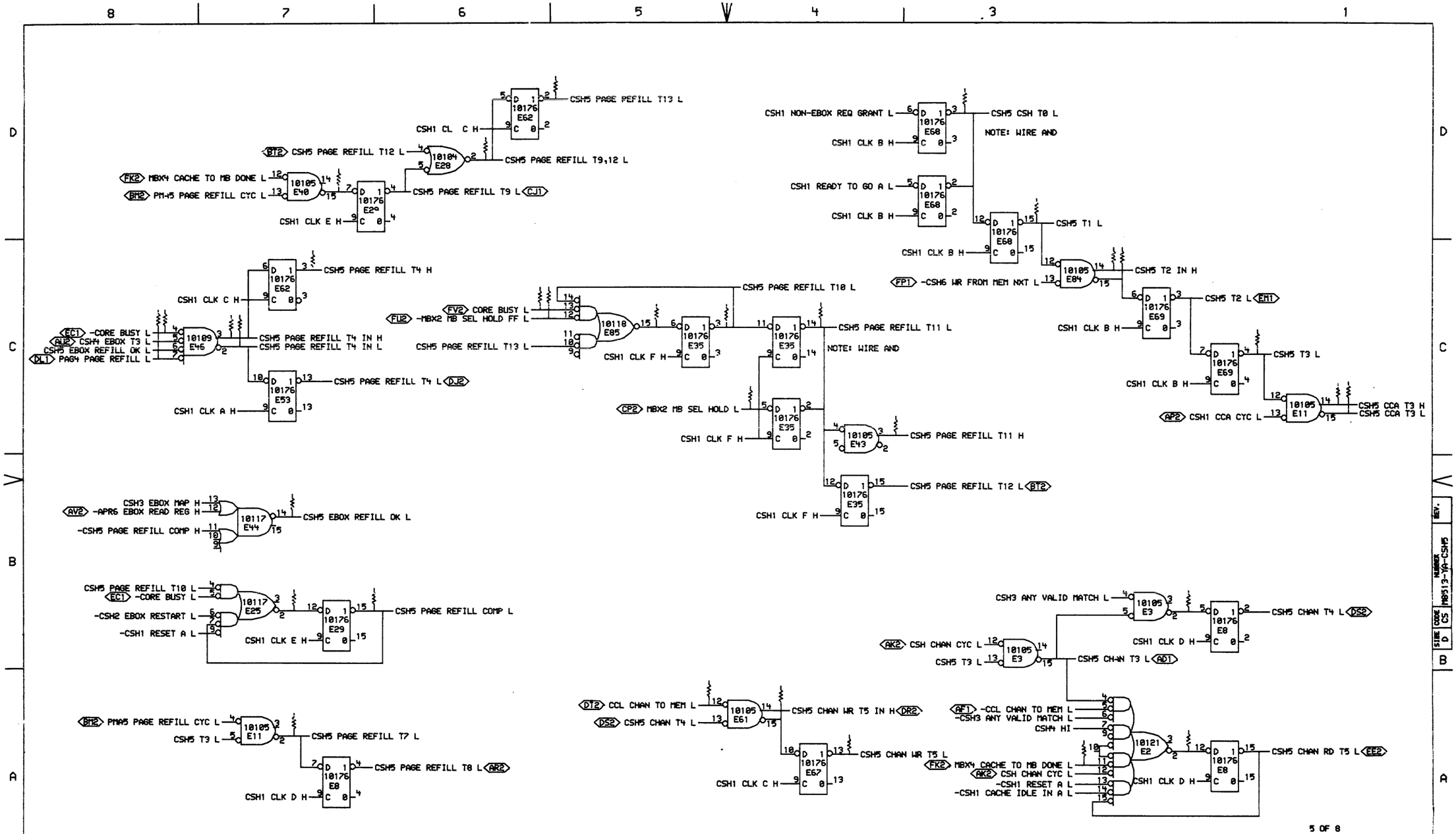

"THIS DRAWING AND SPECIFICATIONS, HEREIN, ARE THE PROPERTY OF DIGITAL EQUIPMENT CORPORATION AND SHALL NOT BE REPRODUCED OR COPIED OR USED IN WHOLE OR IN PART AS THE BASIS FOR THE MANUFACTURE OR SALE OF ITEMS WITHOUT WRITTEN PERMISSION. COPYR'GHT © 1976, DIGITAL EQUIPMENT CORPORATION"

REVISIONS		
CHK	CHANGE NO.	REV

digital

DRN: [illegible] DATE 08-NOV-76
CHK: [illegible] DATE 11/9/76
ENG. [illegible] DATE 13 DEC 76
BOARD LOCATION: 4AF23
SHEET 1 OF 1
CSHREF.DRW[4,175] 07-SEP-76 21:34
NEXT HIGHER ASSEMBLY: B-DD-M8513YA
FIRST USED ON OPTION/MODEL: KL10

TITLE: PAGE REFILL T(N) CSH & CHAN T(N)

SIZE	CODE	NUMBER	REV.
D	CS	M8513-YA-CSH5	

MR

28

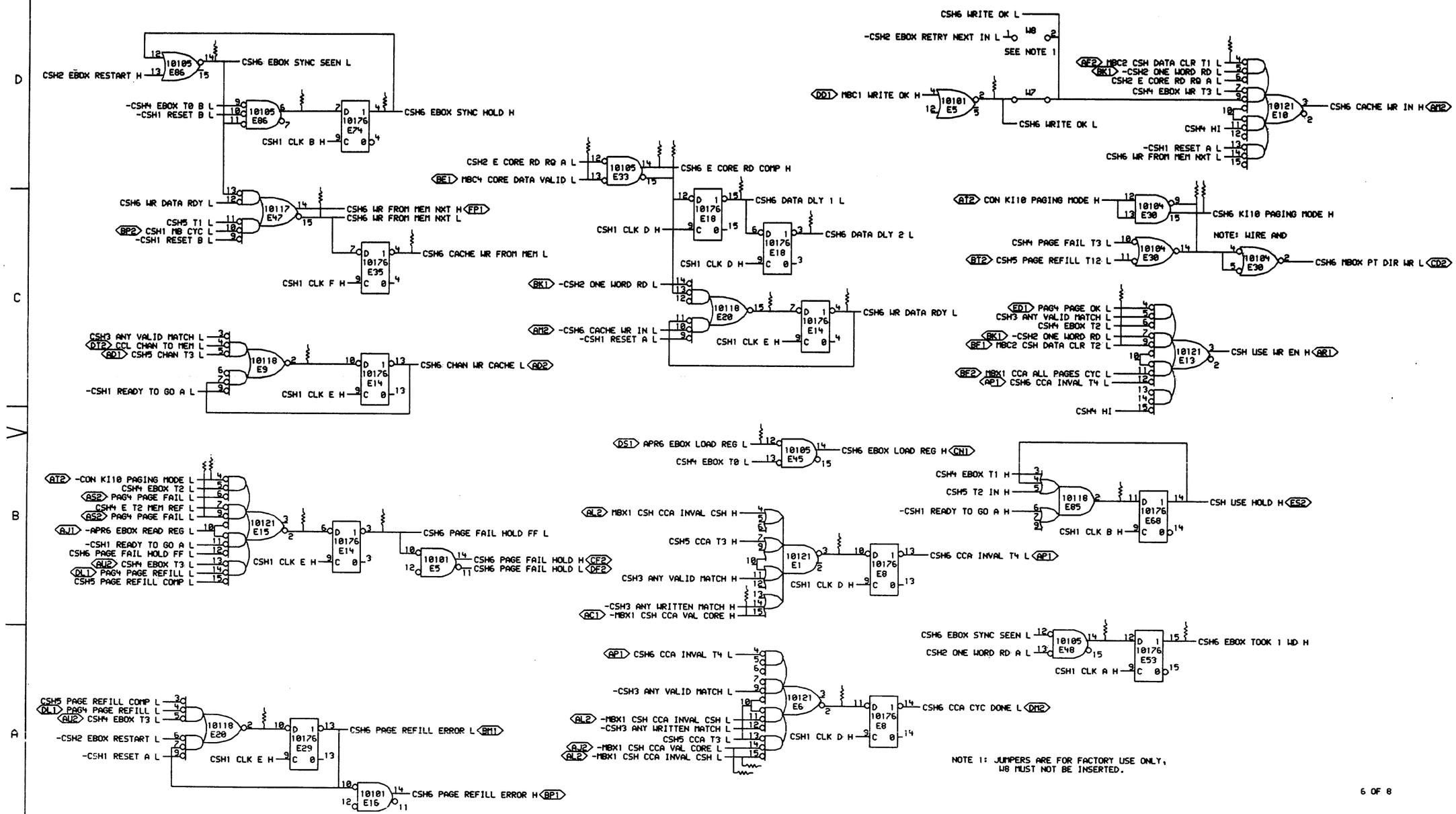

"THIS DRAWING AND SPECIFICATIONS, HEREIN, ARE THE PROPERTY OF DIGITAL EQUIPMENT CORPORATION AND SHALL N BE REPROD**D OR COPIED OR USED IN WHOLE OR IN PART AS THE BASIS FOR THE MANUFACTURE OR SALE OF "TEMS WITHOUT WRITTEN PERMISSION.
COPYRIGHT © 1977, DIGITAL EQUIPMENT CORPORATION"

REVISIONS		
CHK	CHANGE NO.	REV
	M8513-YA-00001	A
	J.ALLEN	

digital

DRN.	DATE 30-MAR-77	ENG.	DATE
CHK.	DATE	BOARD LOCATION: 4A23	
CSHSEF.DRW[4,540]	02-MAR-77 12:50	SHEET 1 OF 1	
FIRST USED ON OPTION/MODEL: KL10		NEXT HIGHER ASSEMBLY: B-DD-M8513-YA	

TITLE: PF HOLD, CCA CTL, CSH WR CTL

SIZE	CODE	NUMBER	REV.
D	CS	M8513-YA-CSH6	A

29 MR

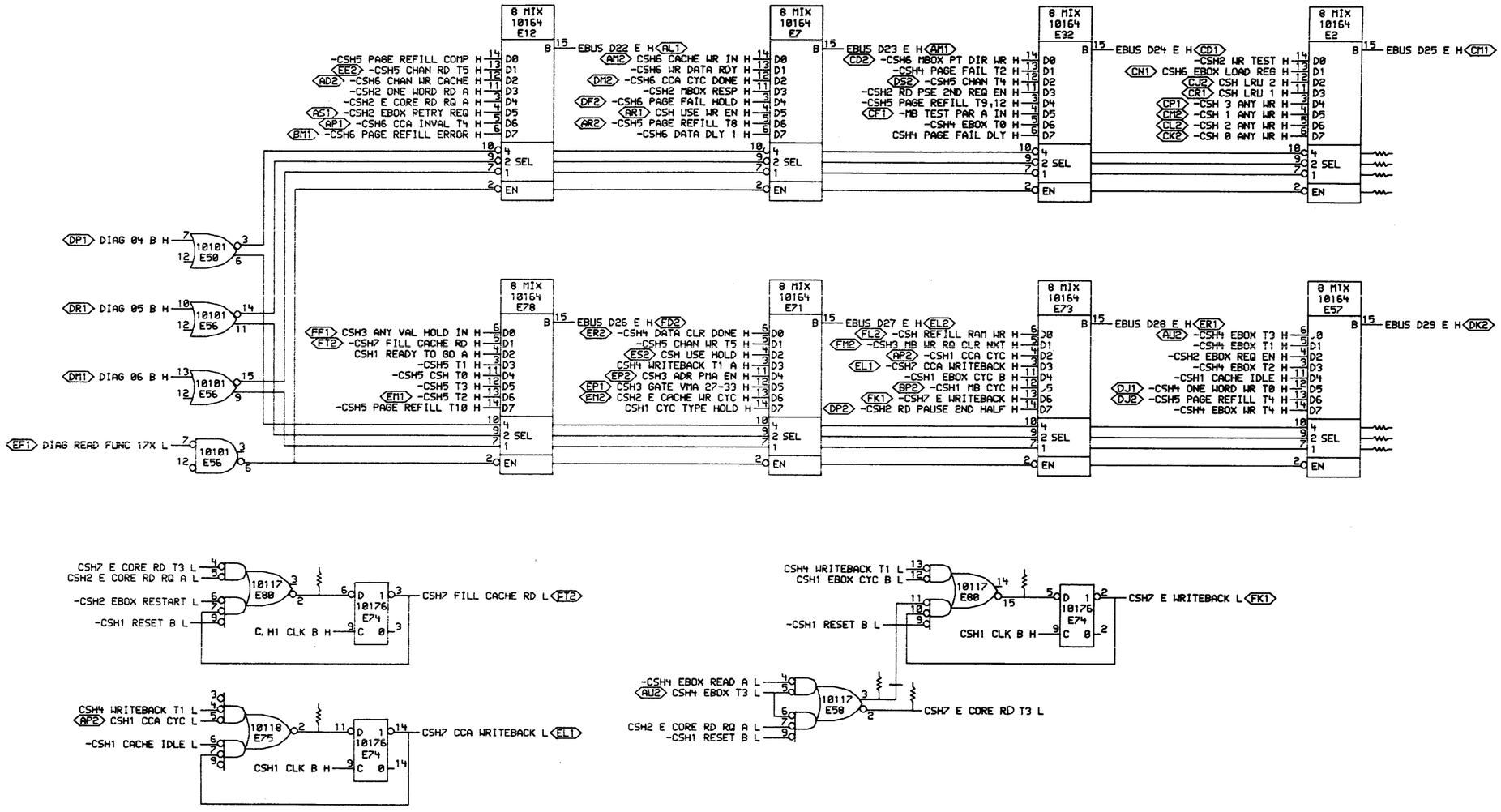

7 OF 8

"THIS DRAWING AND SPECIFICATIONS, HEREIN, ARE THE PROPERTY OF DIGITAL EQUIPMENT CORPORATION AND SHALL NOT BE REPRODUCED OR COPIED OR USED IN WHOLE OR IN PART AS THE BASIS FOR THE MANUFACTURE OR SALE OF ITEMS WITHOUT WRITTEN PERMISSION. COPYRIGHT © 1976, DIGITAL EQUIPMENT CORPORATION"

REVISIONS		
CHK	CHANGE NO.	REV

digital

DRN. L. Loomis DATE 08-NOV-76 ENG. J. P. Allen DATE 15-Dec-76
CHK'D. D. Stephens 11/8/76 BOARD LOCATION: 4AF23
SHEET 1 OF 1
CSH7EF.DRW[4,175] 07-SEP-76 21:36 NEXT HIGHER ASSEMBLY: B-DD-M8513-YA
FIRST USED ON OPTION/MODEL: KL10

TITLE: CSH DIAG MIX CSH PERF SIGNALS

SIZE	CODE	NUMBER	REV.
D	CS	M8513-YA-CSH7	

30

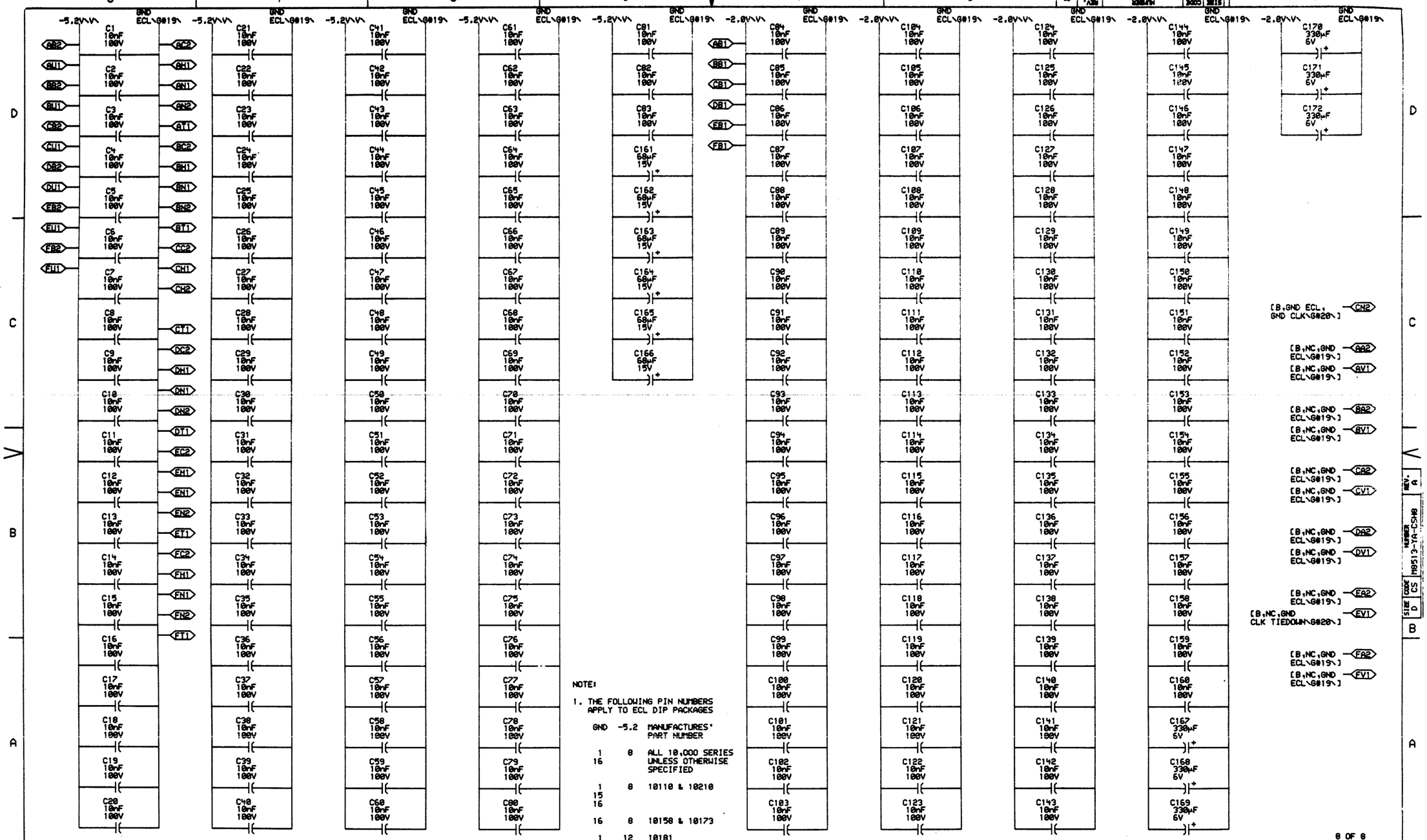

"THIS DRAWING AND SPECIFICATIONS, HEREIN, ARE THE PROPERTY OF DIGITAL EQUIPMENT CORPORATION AND SHALL NOT BE REPRODUCED OR COPIED OR USED IN WHOLE OR IN PART AS THE BASIS FOR THE MANUFACTURE OR SALE OF ITEMS WITHOUT WRITTEN PERMISSION.
COPYRIGHT © 1977, DIGITAL EQUIPMENT CORPORATION"

REVISIONS		
CHK	CHANGE NO.	REV
	M8513-YA-00001	A

DRN. DATE 30-MAR-77 ENG. DATE
CHK DATE BOARD LOCATION: 4A-F23
SHEET 1 OF 1
CSHGEF.DRUK4,540] 30-MAR-77 06:50 NEXT HIGHER ASSEMBLY:
FIRST USED ON OPTION/MODEL: KL10 B-DD-M8513-YA

TITLE: CACHE CONTROL POWER, GND, CAP

SIZE	CODE	NUMBER	REV.
D	CS	M8513-YA-CSH8	A

31 NIR

RESISTOR LOC(PIN)	SHOWN DRW#	ON REF	VALUE	TERMINATES SIGNAL
R121(1)	CSH6	B4	68Ω	%E1(3)
R19(1)	CSH3	D6	68Ω	%E11(7)
R66(1)	CSH6	B7	68Ω	%E15(2)
R122(1)	CSH2	D6	68Ω	%E17(2)
R22(1)	CSH4	C2	68Ω	%E19(15)
R110(1)	CSH5	A2	68Ω	%E2(2)
R65(1)	CSH6	C4	68Ω	%E20(15)
R70(1)	CSH6	A7	68Ω	%E20(2)
R95(1)	CSH1	A4	68Ω	%E22(3)
R171(1)	CSH2	C7	68Ω	%E23(2)
R83(1)	CSH4	A5	68Ω	%E24(15)
R84(1)	CSH4	B6	68Ω	%E24(2)
R80(1)	CSH5	B7	68Ω	%E25(2)
R132(1)	CSH3	D6	68Ω	%E28(3)
R123(1)	CSH5	B2	68Ω	%E3(2)
R20(1)	CSH6	C2	68Ω	%E30(9)
R14(1)	CSH6	D5	68Ω	%E33(15)
R110(1)	CSH4	C7	68Ω	%E33(6)
R103(1)	CSH4	C7	68Ω	%E33(7)
R108(1)	CSH3	C4	68Ω	%E37(14)
R87(1)	CSH1	B4	68Ω	%E37(3)
R138(1)	CSH1	B4	68Ω	%E37(9)
R81(1)	CSH2	C2	68Ω	%E38(2)
R251(1)	CSH2	B7	68Ω	%E4(2)
R82(1)	CSH5	D7	68Ω	%E40(15)
R197(1)	CSH1	A7	68Ω	%E40(7)
R73(1)	CSH4	A5	68Ω	%E42(15)
R31(1)	CSH2	C3	68Ω	%E43(14)
R30(1)	CSH2	C3	68Ω	%E43(7)
R253(1)	CSH3	C6	68Ω	%E45(3)
R201(1)	CSH1	B7	68Ω	%E45(7)
R96(1)	CSH1	B3	68Ω	%E46(15)
R27(1)	CSH2	C4	68Ω	%E47(2)
R33(1)	CSH6	A2	68Ω	%E48(14)
R34(1)	CSH4	D2	68Ω	%E48(2)
R165(1)	CSH7	D2	68Ω	%E50(3)
R154(1)	CSH7	C2	68Ω	%E50(6)
R93(1)	CSH3	A4	68Ω	%E50(9)
R101(1)	CSH2	A2	68Ω	%E51(2)
R257(1)	CSH1	B2	68Ω	%E52(13)

RESISTOR LOC(PIN)	SHOWN DRW#	ON REF	VALUE	TERMINATES SIGNAL
R200(1)	CSH3	A2	68Ω	%E55(3)
R152(1)	CSH7	C2	68Ω	%E56(11)
R166(1)	CSH7	D2	68Ω	%E56(14)
R164(1)	CSH7	D2	68Ω	%E56(15)
R162(1)	CSH7	D2	68Ω	%E56(6)
R153(1)	CSH7	C2	68Ω	%E56(9)
R37(1)	CSH2	C7	68Ω	%E58(15)
R58(1)	CSH7	B4	68Ω	%E58(3)
R77(1)	CSH4	A7	68Ω	%E59(15)
R119(1)	CSH6	A4	68Ω	%E6(2)
R204(1)	CSH5	A4	68Ω	%E61(15)
R190(1)	CSH4	B2	68Ω	%E63(15)
R38(1)	CSH4	D2	68Ω	%E63(2)
R104(1)	CSH4	B6	68Ω	%E65(15)
R106(1)	CSH2	C3	68Ω	%E75(15)
R107(1)	CSH7	A7	68Ω	%E75(2)
R156(1)	CSH2	B2	68Ω	%E76(3)
R206(1)	CSH3	B2	68Ω	%E77(14)
R255(1)	CSH3	C7	68Ω	%E79(14)
R113(1)	CSH7	B3	68Ω	%E80(15)
R111(1)	CSH7	B7	68Ω	%E80(2)
R54(1)	CSH4	C2	68Ω	%E82(3)
R205(1)	CSH1	D6	68Ω	%E82(5)
R46(1)	CSH1	A2	68Ω	%E83(14)
R108(1)	CSH5	C2	68Ω	%E84(15)
R26(1)	CSH5	C5	68Ω	%E85(15)
R147(1)	CSH6	B2	68Ω	%E85(2)
R114(1)	CSH6	D7	68Ω	%E86(6)
R59(1)	CSH2	D3	68Ω	%E9(15)
R62(1)	CSH6	C7	68Ω	%E9(2)
R173(1)	CSH2	D7	68Ω	-A CHANGE COMING IN H
R242(1)	CSH1	C7	68Ω	-APR6 EBOX CCA H
R239(1)	CSH1	C7	68Ω	-APR6 EBOX ERA H;TIME CRITICAL
R88(1)	CSH6	B4	68Ω	-APR6 EBOX LOAD REG H
R10(1)	CSH4	A7	68Ω	APR6 EBOX READ REG H
R231(1)	CSH3	D7	68Ω	-APR6 EBOX READ REG H
R120(1)	CSH4	A7	68Ω	APR6 EBOX SBUS DIAG H
R128(1)	CSH2	C7	68Ω	-CACHE TO MB T4 H
R243(1)	CSH1	D7	68Ω	CCL CHAN REQ H;TIME CRITICAL
R158(1)	CSH1	D7	68Ω	-CCL CHAN REQ H

RESISTOR LOC(PIN)	SHOWN DRW#	ON REF	VALUE	TERMINATES SIGNAL
R60(1)	CSH5	A5	68Ω	-CCL CHAN TO MEM H
R92(1)	CSH3	A4	68Ω	CHAN READ H
R136(1)	CSH1	D2	68Ω	CLK1 CSH H
R43(1)	CSH2	D6	68Ω	-CLK3 EBOX SYNC D H
R39(1)	CSH1	C4	68Ω	CLK4 EBOX CYC ABORT H
R102(1)	CSH1	C7	68Ω	CLK4 EBOX REQ H
R237(1)	CSH1	D7	68Ω	-CLK4 EBOX REQ H
R17(1)	CSH6	B7	68Ω	CON KI10 PAGING MODE H
R44(1)	CSH5	C8	68Ω	CORE BUSY H
R24(1)	CSH5	C6	68Ω	-CORE BUSY H
R183(1)	CSH3	B4	68Ω	-CSH 0 ANY WR H
R70(1)	CSH3	C2	68Ω	CSH 0 VALID MATCH H
R223(1)	CSH3	C4	68Ω	-CSH 0 VALID MATCH H
R233(1)	CSH3	D2	68Ω	CSH 0 WD VAL H
R181(1)	CSH3	B4	68Ω	-CSH 1 ANY WR H
R71(1)	CSH3	C2	68Ω	CSH 1 VALID MATCH H
R224(1)	CSH3	C4	68Ω	-CSH 1 VALID MATCH H
R234(1)	CSH3	D2	68Ω	CSH 1 WD VAL H
R182(1)	CSH3	B4	68Ω	-CSH 2 ANY WR H
R68(1)	CSH3	C2	68Ω	CSH 2 VALID MATCH H
R225(1)	CSH3	C4	68Ω	-CSH 2 VALID MATCH H
R235(1)	CSH3	C2	68Ω	CSH 2 WD VAL H
R184(1)	CSH3	B4	68Ω	-CSH 3 ANY WR H
R69(1)	CSH3	C2	68Ω	CSH 3 VALID MATCH H
R222(1)	CSH3	C4	68Ω	-CSH 3 VALID MATCH H
R226(1)	CSH3	C2	68Ω	CSH 3 WD VAL H
R178(1)	CSH3	A7	68Ω	CSH LRU 1 H
R175(1)	CSH3	A7	68Ω	CSH LRU 2 H
R48(1)	CSH1	C2	68Ω	CSH1 CACHE IDLE H
R246(1)	CSH1	C3	68Ω	-CSH1 CACHE IDLE H
R105(1)	CSH1	C3	68Ω	CSH1 CACHE IDLE IN H
R161(1)	CSH1	C4	68Ω	CSH1 CACHE IDLE IN A H
R137(1)	CSH1	B4	68Ω	CSH1 CACHE IDLE IN B H
R167(1)	CSH1	B4	68Ω	-CSH1 CACHE IDLE IN B H
R100(1)	CSH1	C3	68Ω	CSH1 CACHE IDLE IN D H
R249(1)	CSH1	A6	68Ω	-CSH1 CCA REQ EN H
R208(1)	CSH1	C7	68Ω	-CSH1 CCA REQ GRANT H
R155(1)	CSH1	B6	68Ω	-CSH1 CHAN REQ EN H
R248(1)	CSH1	D7	68Ω	-CSH1 CHAN REQ GRANT H
R35(1)	CSH1	D1	68Ω	CSH1 CLK A H

RESISTOR LOC(PIN)	SHOWN DRW#	ON REF	VALUE	TERMINATES SIGNAL
R109(1)	CSH1	D1	68Ω	CSH1 CLK B H
R209(1)	CSH1	D1	68Ω	CSH1 CLK C H
R125(1)	CSH1	D1	68Ω	CSH1 CLK D H
R61(1)	CSH1	D1	68Ω	CSH1 CLK E H
R21(1)	CSH1	D1	68Ω	CSH1 CLK F H
R250(1)	CSH1	C5	68Ω	CSH1 CYC TYPE HOLD H
R245(1)	CSH1	B1	68Ω	CSH1 EBOX CYC A H
R168(1)	CSH1	D3	68Ω	-CSH1 EBOX CYC B H
R238(1)	CSH1	D7	68Ω	-CSH1 EBOX REQ GRANT H
R176(1)	CSH1	C6	68Ω	CSH1 EBOX REQ GRANT A H
R157(1)	CSH1	B6	68Ω	CSH1 MB REQ H
R215(1)	CSH1	D7	68Ω	CSH1 MB REQ GRANT H
R143(1)	CSH1	A7	68Ω	-CSH1 MR RESET A H
R177(1)	CSH1	B7	68Ω	CSH1 NON-EBOX REQ GRANT H
R148(1)	CSH1	B7	68Ω	-CSH1 NON-EBOX REQ GRANT H
R9(1)	CSH1	A1	68Ω	CSH1 READY TO GO A H
R179(1)	CSH1	A1	68Ω	-CSH1 READY TO GO A H
R15(1)	CSH1	A7	68Ω	CSH1 RESET A H
R212(1)	CSH1	A6	68Ω	CSH1 RESET B H
R52(1)	CSH2	A6	68Ω	-CSH2 E CORE RD RQ A H
R140(1)	CSH2	B2	68Ω	CSH2 E REQ EN CLR H
R240(1)	CSH2	A1	68Ω	-CSH2 EBOX REQ EN H
R58(1)	CSH2	D5	68Ω	CSH2 EBOX RESTART H
R45(1)	CSH2	D5	68Ω	-CSH2 EBOX RESTART H
R139(1)	CSH2	C2	68Ω	CSH2 EBOX RETRY NEXT H
R16(1)	CSH2	B2	68Ω	-CSH2 EBOX RETRY NEXT H
R1(1)	CSH2	C3	68Ω	CSH2 EBOX RETRY NEXT IN H
R42(1)	CSH2	D6	68Ω	-CSH2 MBOX RESP H
R47(1)	CSH2	D2	68Ω	-CSH2 ONE WORD RD A H
R185(1)	CSH2	C6	68Ω	-CSH2 RD PSE 2ND REQ EN H
R169(1)	CSH2	C5	68Ω	-CSH2 SBUS DIAG 3 A H
R23(1)	CSH2	B3	68Ω	-CSH2 WR TEST H
R228(1)	CSH3	D2	68Ω	-CSH3 0 WD VAL H
R229(1)	CSH3	D2	68Ω	-CSH3 1 WD VAL H
R230(1)	CSH3	C2	68Ω	-CSH3 2 WD VAL H
R227(1)	CSH3	C2	68Ω	-CSH3 3 WD VAL H
R214(1)	CSH3	B6	68Ω	-CSH3 ANY VAL HOLD H
R28(1)	CSH3	C1	68Ω	CSH3 ANY VALID MATCH H
R213(1)	CSH3	C2	68Ω	-CSH3 ANY VALID MATCH H
R216(1)	CSH3	D4	68Ω	CSH3 ANY WRITTEN MATCH H

NOTE:

1. ALL TERMINATORS HAVE PIN TWO CONNECTED TO -2.0V AND ARE 5% 1/4WATT UNLESS OTHERWISE SPECIFIED
2. ENTRIES ARE SORTED BY SIGNAL NAME
3. % INDICATES OUTPUT OF DIP LOC AND
   () INDICATES PIN NUMBER

"THIS DRAWING AND SPECIFICATIONS, HEREIN, ARE THE PROPERTY OF DIGITAL EQUIPMENT CORPORATION AND SHALL NOT BE REPRODUCED OR COPIED OR USED IN WHOLE OR IN PART AS THE BASIS FOR THE MANUFACTURE OR SALE OF ITEMS WITHOUT WRITTEN PERMISSION.
COPYRIGHT © 1977, DIGITAL EQUIPMENT CORPORATION"

REVISIONS

CHK	CHANGE NO.	REV
	M8513-YA-00001	A

J. ALLEN

digital

DRN. C. Smith DATE 30-MAR-77 ENG. DATE 4/4/77
CHK DATE 3/30/77 BOARD LOCATION:
F85131.DRW[4,540] 30-MAR-77 07:12 SHEET 1 OF 2 NEXT HIGHER ASSEMBLY:
FIRST USED ON OPTION/MODEL: KL10 B-DD-M8513-YA

TITLE: CACHE CONTROL TERMINATORS

SIZE	CODE	NUMBER	REV.
D	CS	M8513-YA-RES	A

32

RESISTOR LOC(PIN)	SHOWN ON DRW#	REF	VALUE	TERMINATES SIGNAL
R74(1)	CSH3	D4	68Ω	-CSH RITTEN MATCH H
R85(1)	CSH3	D6	68Ω	-CSH E IDLE IN C H
R232(1)	CSH3	D5	68Ω	CSH MAP H
R32(1)	CSH3	B3	68Ω	CSH ANY WR H
R4(1)	CSH3	B4	68Ω	-CS U ANY WR H
R220(1)	CSH3	C6	68Ω	CS P PROBLEM H
R56(1)	CSH3	C4	68Ω	CS) FOUND H
R172(1)	CSH3	C4	68Ω	-C RD FOUND H
R145(1)	CSH4	D2	68Ω	-CSH4 DATA CLR T4 H
R57(1)	CSH4	C4	68Ω	-CSH4 E RD T2 CORE OK H
R170(1)	CSH4	D4	68Ω	-CSH4 E RD T2 OK H
R40(1)	CSH4	A7	68Ω	-CSH4 E T2 MEM REF H
R72(1)	CSH4	D4	68Ω	-CSH4 E WR T2 H
R193(1)	CSH4	C4	68Ω	-CSH4 EBOX PAUSE A H
R84(1)	CSH4	C4	68Ω	CSH4 EBOX PAUSE WRITE H
R86(1)	CSH4	C4	68Ω	-CSH4 EBOX PAUSE WRITE H
R192(1)	CSH4	C4	68Ω	CSH4 EBOX READ A H
R79(1)	CSH4	D6	68Ω	-CSH4 EBOX T0 H
R53(1)	CSH4	D6	68Ω	CSH4 EBOX T0 B H
R207(1)	CSH4	D7	68Ω	-CSH4 EBOX T0 IN H
R144(1)	CSH4	C6	68Ω	CSH4 EBOX T1 H
R142(1)	CSH4	C6	68Ω	-CSH4 EBOX T1 H
R12(1)	CSH4	B5	68Ω	-CSH4 EBOX T2 H
R8(1)	CSH4	D2	68Ω	-CSH4 EBOX WR T3 H
R190(1)	CSH4	D1	68Ω	-CSH4 EBOX WR T4 H
R159(1)	CSH4	D4	68Ω	CSH4 HI
R186(1)	CSH4	B3	68Ω	CSH4 PAGE FAIL DLY H
R180(1)	CSH4	B2	68Ω	-CSH4 PAGE FAIL T2 H
R18(1)	CSH4	A2	68Ω	-CSH4 PAGE FAIL T3 H
R49(1)	CSH4	A4	68Ω	-CSH4 WRITEBACK T1 H
R194(1)	CSH4	A4	68Ω	CSH4 WRITEBACK T1 A H
R112(1)	CSH4	B4	68Ω	-CSH4 WRITEBACK T2 H
R210(1)	CSH5	C1	68Ω	CSH5 CCA T3 H
R67(1)	CSH5	C1	68Ω	-CSH5 CCA T3 H
R187(1)	CSH5	A4	68Ω	-CSH5 CHAN WR T5 H
R151(1)	CSH5	D3	68Ω	-CSH5 CSH T0 H
R98(1)	CSH5	B7	68Ω	-CSH5 EBUX REFILL OK H
R236(1)	CSH5	B6	68Ω	-CSH5 PAGE REFILL COMP H
R150(1)	CSH5	C4	68Ω	-CSH5 PAGE REFILL T10 H
R91(1)	CSH5	C4	68Ω	CSH5 PAGE REFILL T11 H

RESISTOR LOC(PIN)	SHOWN ON DRW#	REF	VALUE	TERMINATES SIGNAL
R29(1)	CSH5	C4	68Ω	-CSH5 PAGE REFILL T11 H
R117(1)	CSH5	D5	68Ω	-CSH5 PAGE REFILL T13 H
R211(1)	CSH5	C7	68Ω	CSH5 PAGE REFILL T4 H
R203(1)	CSH5	C7	68Ω	CSH5 PAGE REFILL T4 IN H
R36(1)	CSH5	C7	68Ω	-CSH5 PAGE REFILL T4 IN H
R124(1)	CSH5	A7	68Ω	-CSH5 PAGE REFILL T7 H
R202(1)	CSH5	D6	68Ω	-CSH5 PAGE REFILL T9,12 H
R97(1)	CSH5	D3	68Ω	-CSH5 T1 H
R116(1)	CSH5	C2	68Ω	CSH5 T2 IN H
R221(1)	CSH5	C1	68Ω	-CSH5 T3 H
R189(1)	CSH6	C6	68Ω	-CSH6 CACHE WR FROM MEM H
R163(1)	CSH6	C4	68Ω	-CSH6 DATA DLY 1 H
R99(1)	CSH6	C4	68Ω	-CSH6 DATA DLY 2 H
R129(1)	CSH6	D5	68Ω	CSH6 E CORE RD COMP H
R131(1)	CSH6	D6	68Ω	CSH6 EBOX SYNC HOLD H
R90(1)	CSH6	D7	68Ω	-CSH6 EBOX SYNC SEEN H
R196(1)	CSH6	A2	68Ω	CSH6 EBOX TOOK 1 WD H
R254(1)	CSH6	C2	68Ω	CSH6 KI10 PAGING MODE H
R3(1)	CSH6	B6	68Ω	-CSH6 PAGE FAIL HOLD FF H
R89(1)	CSH6	C4	68Ω	-CSH6 WR DATA RDY H
R5(1)	CSH6	C7	68Ω	-CSH6 WR FROM MEM NXT H
R2(1)	CSH6	D3	68Ω	-CSH6 WRITE OK H
R51(1)	CSH7	B4	68Ω	-CSH7 E CORE RD T3 H
R134(1)	CSH3	D7	68Ω	-CTL3 DIAG LD EBUS REG H
R6(1)	CSH2	B3	68Ω	MBC1 WRITE OK H
R7(1)	CSH6	D2	68Ω	-MBC2 CSH DATA CLR T1 H
R127(1)	CSH6	C2	68Ω	-MBC2 CSH DATA CLR T2 H
R252(1)	CSH4	D2	68Ω	-MBC2 CSH DATA CLR T3 H
R146(1)	CSH4	B3	68Ω	-MBC2 DATA CLR DONE IN H
R130(1)	CSH2	C7	68Ω	-MBC4 CORE DATA VAL -1 H
R55(1)	CSH2	B7	68Ω	MBC4 CORE DATA VALID H
R133(1)	CSH6	D5	68Ω	-MBC4 CORE DATA VALID H
R76(1)	CSH4	B7	68Ω	MBX1 CACHE BIT H
R63(1)	CSH4	C3	68Ω	-MBX1 CACHE BIT H
R217(1)	CSH6	A4	68Ω	MBX1 CSH CCA INVAL CSH H
R219(1)	CSH6	A5	68Ω	MBX1 CSH CCA VAL CORE H
R75(1)	CSH6	B4	68Ω	-MBX1 CSH CCA VAL CORE H
R244(1)	CSH3	A3	68Ω	MBX1 REFILL ADR EN NXT H
R25(1)	CSH5	C4	68Ω	-MBX2 MB SEL HOLD H
R115(1)	CSH5	C5	68Ω	MBX2 MB SEL HOLD FF H

RESISTOR LOC(PIN)	SHOWN ON DRW#	REF	VALUE	TERMINATES SIGNAL
R174(1)	CSH2	C5	68Ω	-MBX3 SBUS DIAG 3 H
R160(1)	CSH5	A2	68Ω	-MBX4 CACHE TO MB DONE H
R199(1)	CSH1	B7	68Ω	MBX5 MB REQ IN H
R41(1)	CSH4	C4	68Ω	MCL2 VMA PAUSE H
R141(1)	CSH4	C4	68Ω	-MCL2 VMA READ H
R241(1)	CSH3	D7	68Ω	-MCL6 EBOX MAP H
R256(1)	CSH1	B7	68Ω	MEM BUSY H
R149(1)	CSH3	C6	68Ω	NC
R13(1)	CSH6	B7	68Ω	-PAG4 PAGE FAIL H
R126(1)	CSH4	D5	68Ω	-PAG4 PAGE OK H
R11(1)	CSH5	C8	68Ω	-PAG4 PAGE REFILL H
R247(1)	CSH1	C4	68Ω	-PMA5 CSH WRITEBACK CYC H
R210(1)	CSH1	D5	68Ω	PMA5 CYC TYPE HOLD H
R191(1)	CSH1	C2	68Ω	-PMA5 PAGE REFILL CYC H
R135(1)	CSH1	C4	68Ω	VMA1 AC REF A H

NOTE:

1. ALL TERMINATORS HAVE PIN TWO CONNECTED TO -2.0V AND ARE 5% 1/4WATT UNLESS OTHERWISE SPECIFIED
2. ENTRIES ARE SORTED BY SIGNAL NAME
3. % INDICATES OUTPUT OF DIP LOC AND () INDICATES PIN NUMBER

"THIS DRAWING AND SPECIFICATIONS, HEREIN, ARE THE PROPERTY OF DIGITAL EQUIPMENT CORPORATION AND SHALL NOT BE REPRODUCED OR COPIED OR USED IN WHOLE OR IN PART AS THE BASIS FOR THE MANUFACTURE OR SALE OF ITEMS WITHOUT WRITTEN PERMISSION. COPYRIGHT © 1977, DIGITAL EQUIPMENT CORPORATION"

REVISIONS		
CHK	CHANGE NO.	REV

digital

DRN. C Smith DATE 30-MAR-77 ENG. DATE
CHK'D DATE
BOARD LOCATION:
SHEET 2 OF 2
F35132.DRW(4,540) 30-MAR-77 07:15 NEXT HIGHER ASSEMBLY:
FIRST USED ON OPTION/MODEL: KL10 B-DD-M8513-YA

TITLE: CACHE CONTROL TERMINATORS

SIZE	CODE	NUMBER	REV.
D	CS	M8513-YA-RES	A

MR

33

REVISION CONTROL SHEET

CUSTOMER PRINT SET	MFG SET	DRAWING NO	NO OF SHT	DESCRIPTION	OPTION NO/FILE DATE	REVISIONS	
				MODULE REVISION		A	A
		D-UA-M8514-Ø-Ø	5	CACHE DIRECTORY		-	-
		D-CS-M8514-Ø-CHA1	1	CACHE DIR CSH Ø,1 BIT 14-25		-	A
		D-CS-M8514-Ø-CHA2	1	CACHE DIR CSH 2,3 BIT 14-25		-	A
		D-CS-M8514-Ø-CHA3	1	CACHE DIR PARITY BITS		-	A
		D-CS-M8514-Ø-CHA4	1	CACHE DIR BIT 26 & WR BITS		-	A
		D-CS-M8514-Ø-CHA5	1	CACHE DIR PWR, GND, CAP		-	A
		C-CS-M8514-Ø-RES	1	CACHE DIR TERMINATORS		-	A
		K-CO-M8514-Ø-4	1	CACHE DIRECTORY		C	C
		D-AH-M8514-Ø-5	4	CACHE DIRECTORY		A	B
		B-MH-M8514-Ø-6	1	MODULE ECO HISTORY		-	A
		5010526	-	ETCH CIRCUIT BOARD		C	C
		POO-M8514-ØØ		PROCESS SHEET (REF ONLY)		-	-

CUSTOMER PRINT SET CODES
X = PRINT OF DOCUMENT INCLUDED IN PRINT SET
C = INCLUDES ALL PRINTS INDICATED ON DOCUMENT
S = CONFIDENTIAL AUTHORIZED SIGNATURE REQUIRED

ECO NO	
ORIG	00001

TITLE	SHEET	SIZE	CODE	NUMBER	REV
CACHE DIRECTORY	2 OF 2	B	DD	M8514-Ø	A

MR

THIS DRAWING AND SPECIFICATIONS, HEREIN, ARE THE PROPERTY OF DIGITAL EQUIPMENT CORPORATION AND SHALL NOT BE REPRODUCED OR COPIED OR USED IN WHOLE OR IN PART AS THE BASIS FOR THE MANUFACTURE OR SALE OF ITEMS WITHOUT WRITTEN PERMISSION
COPYRIGHT ©1974 DIGITAL EQUIPMENT CORPORATION

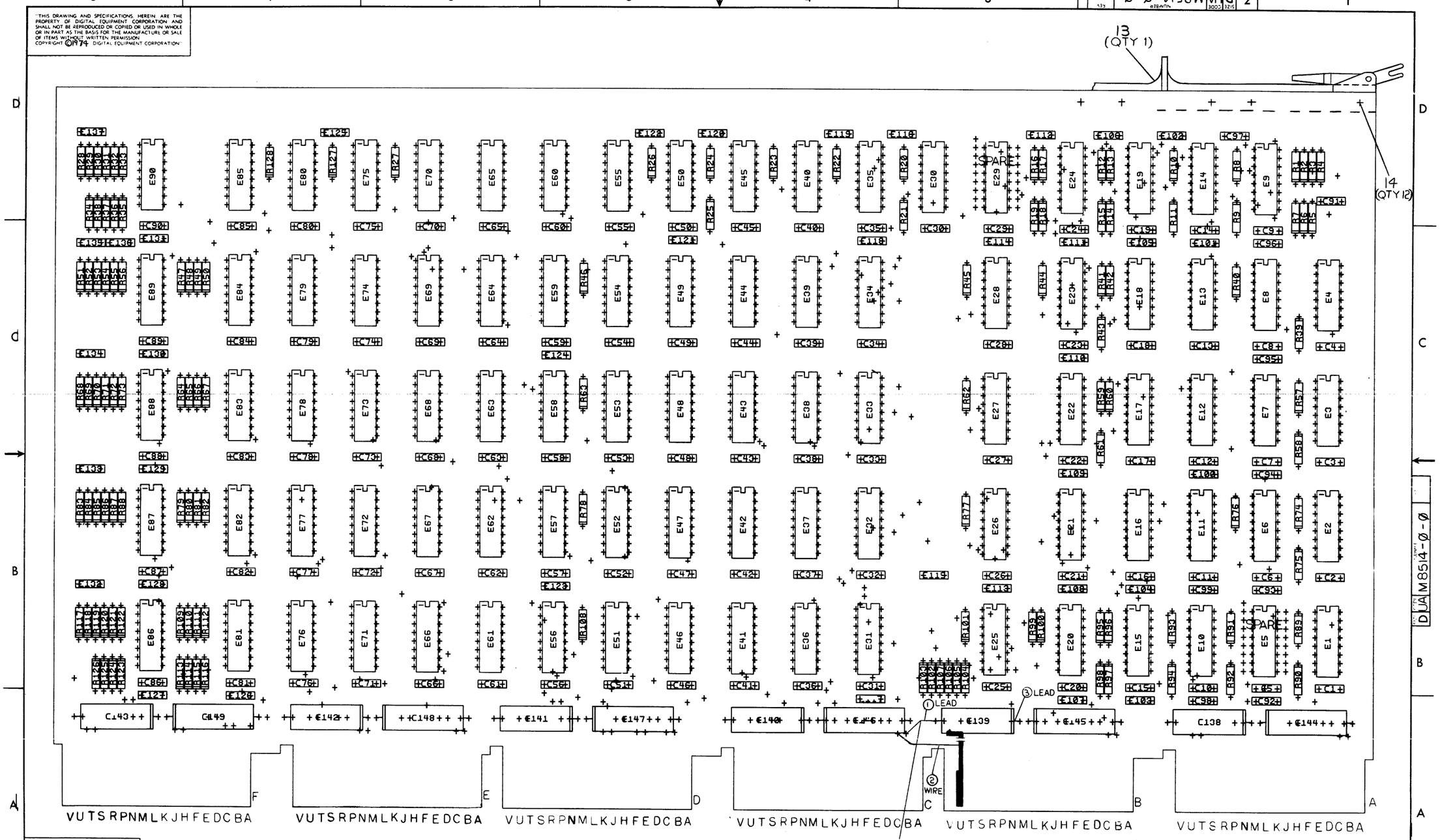

REVISIONS		
CHK	CHANGE NO	REV

TITLE	SIZE	CODE	NUMBER	REV.
CACHE DIRECTORY	D	UA	M8514-0-0	
SCALE 2/1	SHEET 2 OF 5	DIST.	MR	

35

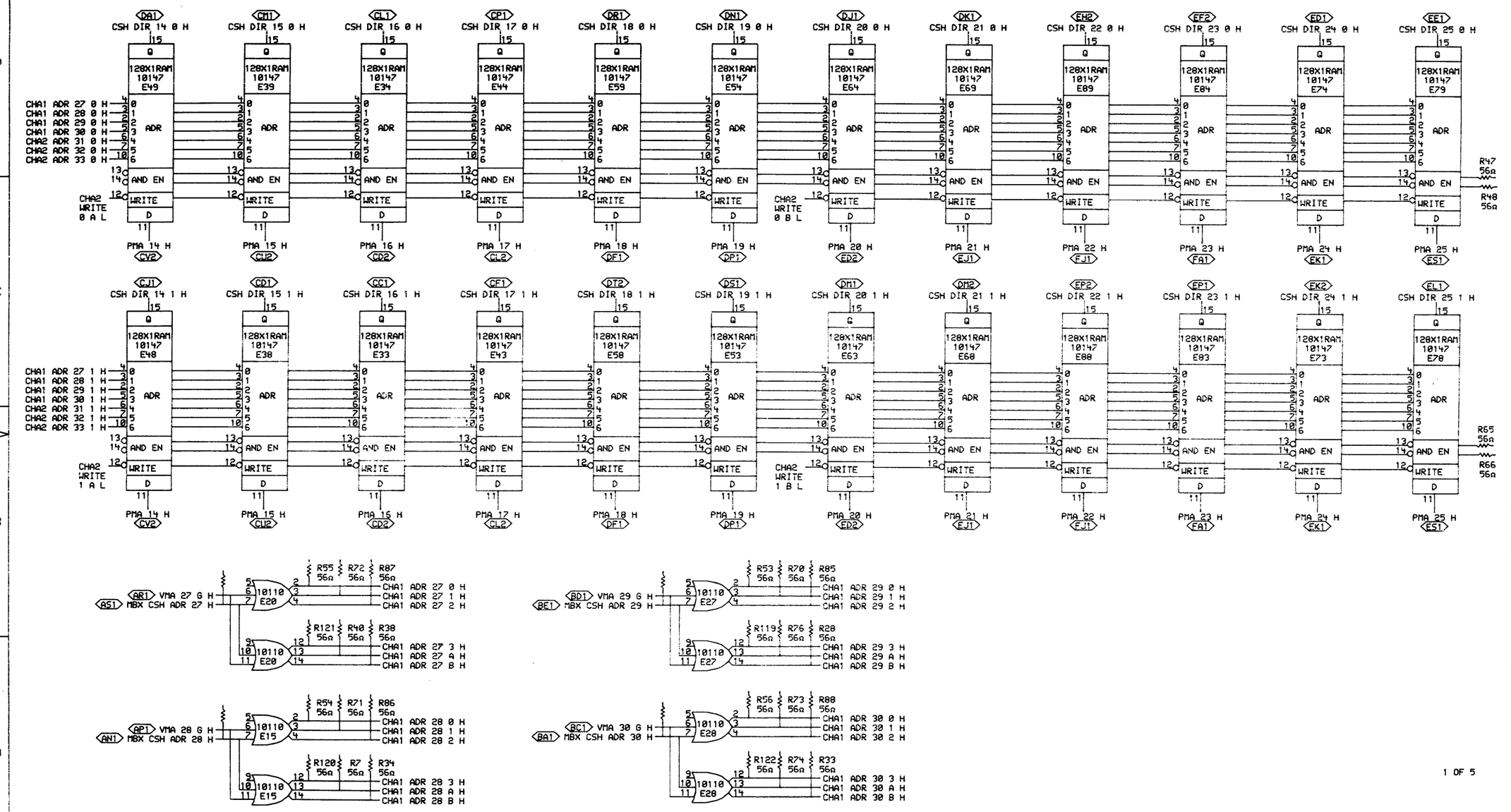

"THIS DRAWING AND SPECIFICATIONS, HEREIN, ARE THE PROPERTY OF DIGITAL EQUIPMENT CORPORATION AND SHALL NOT BE REPRODUCED OR COPIED OR USED IN WHOLE OR IN PART AS THE BASIS FOR THE MANUFACTURE OR SALE OF ITEMS WITHOUT WRITTEN PERMISSION. COPYRIGHT © 1977, DIGITAL EQUIPMENT CORPORATION"

REVISIONS		
CHK	CHANGE NO.	REV
AC	M8514-0-CHA1	A

digital	DRN. L. Loomis	DATE 06-MAY-77	ENG. John D. Wu	DATE 17 MAY 77
	CHK	DATE 5/18/77	BOARD LOCATION: 4AF27	
			SHEET 1 OF 1	
CHA1EX.DRW[4,541] 09-MAY-77 12:50			NEXT HIGHER ASSEMBLY:	
FIRST USED ON OPTION/MODEL: KL10			B-DD-M8514-0	

TITLE: CACHE DIR CSH 0,1 BIT 14-25

SIZE	CODE	NUMBER	REV.
D	CS	M8514-0-CHA1	A

36

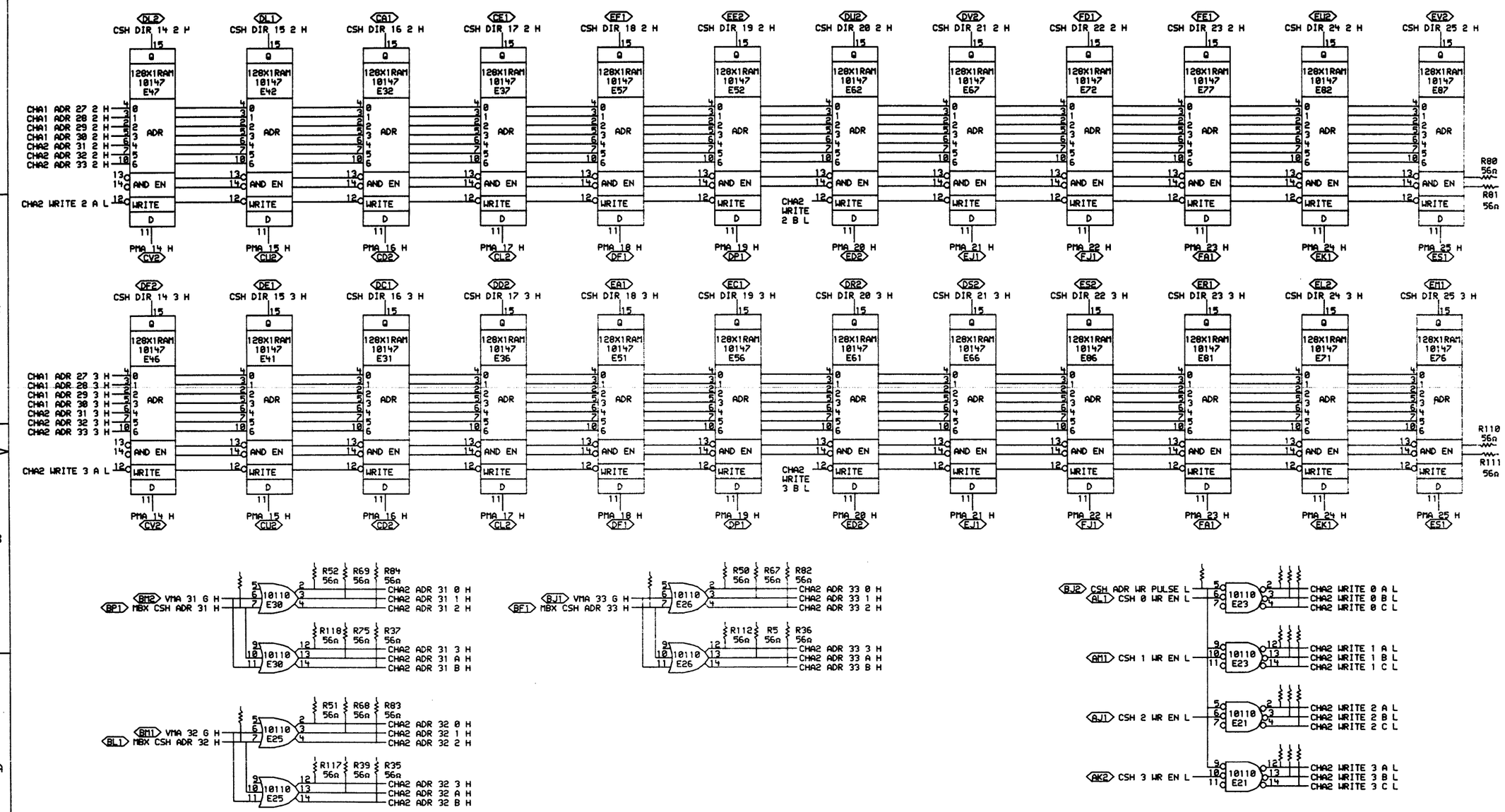

"THIS DRAWING AND SPECIFICATIONS, HEREIN, ARE THE PROPERTY OF DIGITAL EQUIPMENT CORPORATION AND SHALL NOT BE REPRODUCED OR COPIED OR USED IN WHOLE OR IN PART AS THE BASIS FOR THE MANUFACTURE OR SALE OF ITEMS WITHOUT WRITTEN PERMISSION. COPYRIGHT © 1977, DIGITAL EQUIPMENT CORPORATION"

REVISIONS		
CHK	CHANGE NO.	REV
	M8514	A

digital

DRN. T. Toomey DATE 03-MAY-77 ENG. DATE 19 May 77
CHK. DATE BOARD LOCATION: 4AE27
SHEET 1 OF 1
CHA2EX.DRW[4,541] 05-MAY-77 13:04 NEXT HIGHER ASSEMBLY:
FIRST USED ON OPTION/MODEL: KL10 B-DD-M8514-0

TITLE: CACHE DIR CSH 2,3 BIT 14-25

SIZE	CODE	NUMBER	REV.
D	CS	M8514-0-CHA2	A

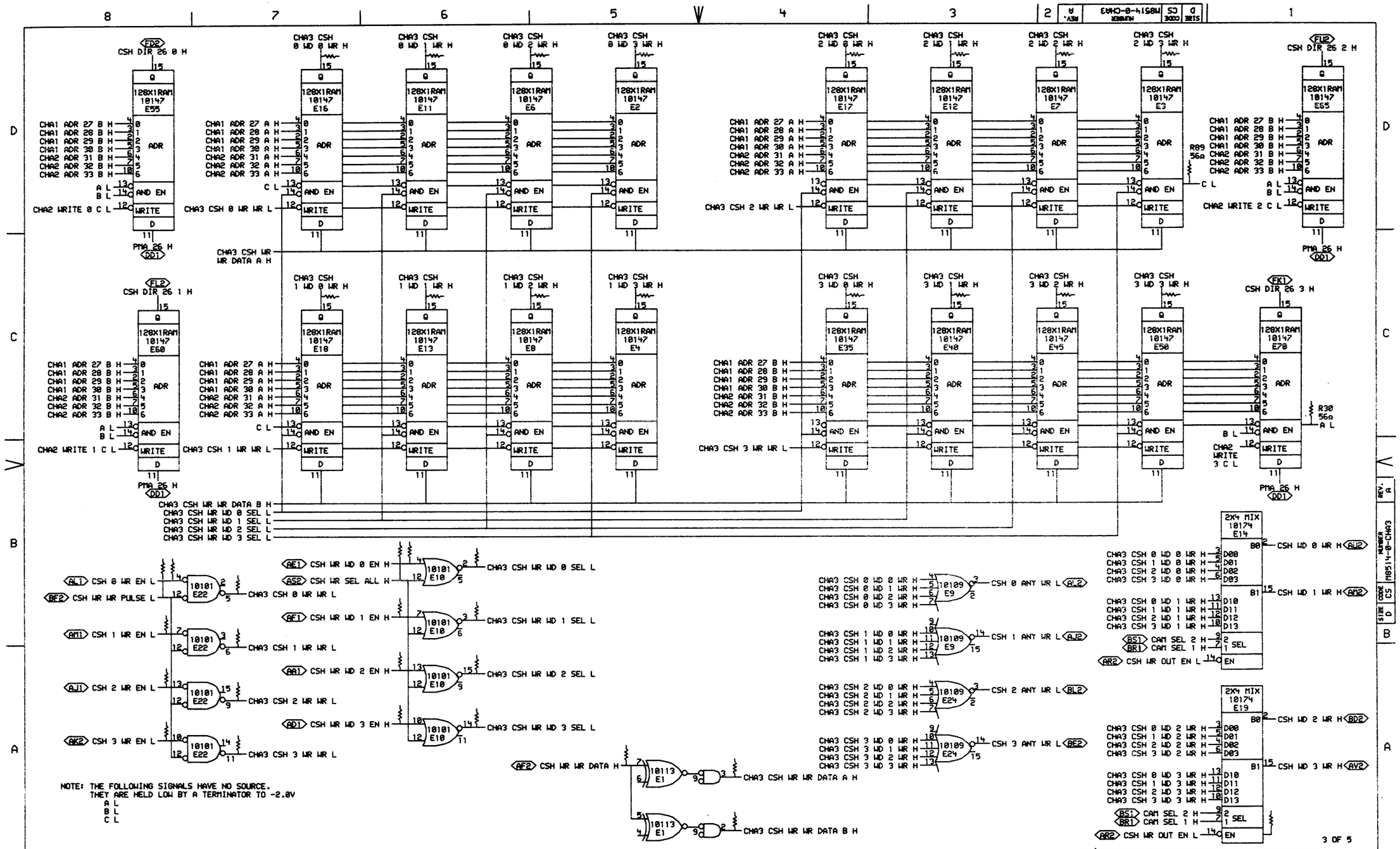

NOTE: THE FOLLOWING SIGNALS HAVE NO SOURCE.
THEY ARE HELD LOW BY A TERMINATOR TO -2.0V
A L
B L
C L

"THIS DRAWING AND SPECIFICATIONS, HEREIN, ARE THE PROPERTY OF DIGITAL EQUIPMENT CORPORATION AND SHALL NOT BE REPRODUCED OR COPIED OR USED IN WHOLE OR IN PART AS THE BASIS FOR THE MANUFACTURE OR SALE OF ITEMS WITHOUT WRITTEN PERMISSION.
COPYRIGHT © 1977, DIGITAL EQUIPMENT CORPORATION"

REVISIONS		
CHK	CHANGE NO.	REV
KK	M8514-00001	A

J.ALLEN

digital

DRN. L.Loosley DATE 11-MAY-77
CHK'D. DATE 5/16/77
ENG. DATE 11 MAY 77
BOARD LOCATION: 4AF27
SHEET 1 OF 1
CHA3EX.DRW 4.5413 11-MAY-77 09:15
NEXT HIGHER ASSEMBLY: B-DD-M8514-0
FIRST USED ON OPTION/MODEL: KL10

TITLE: CACHE DIR BIT 26 & WR BITS

SIZE	CODE	NUMBER	REV.
D	CS	M8514-0-CHA3	A

MR

38

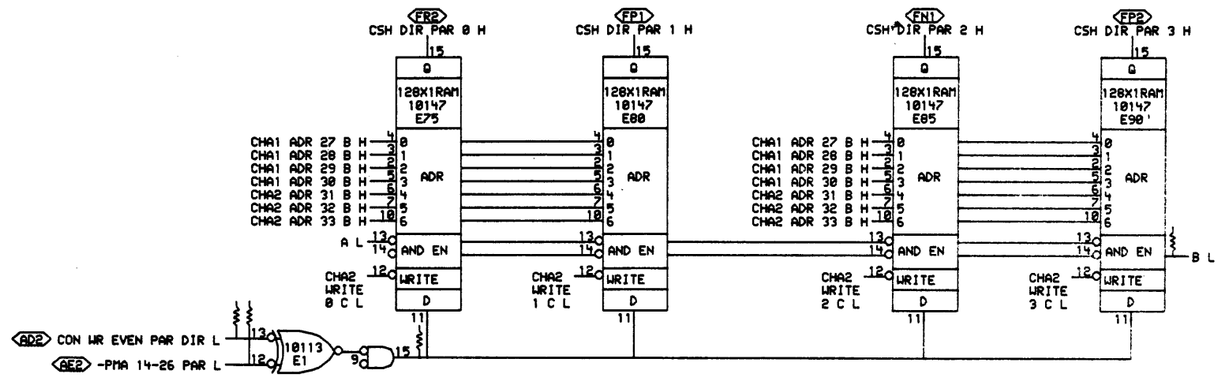

FS2 PT WRITABLE H
FS1 CHA TERM 01\#400\
FR1 -PT MATCH H
FF1 CHA TERM 03\#400\
BR2 CHA TERM 04\#400\
BP2 CHA TERM 05\#400\
FE2 CHA TERM 06\#400\
FJ2 CHA TERM 07\#400\
BS2 CHA TERM 08\#400\
BU2 CHA TERM 09\#400\
BV2 CHA TERM 10\#400\
BT2 CHA TERM 11\#400\
FV2 PT SOFTWARE H
FF2 PT ACCESS H

NOTE: CHA TERMS ARE SPARE TERMINATORS

4 OF 5

"THIS DRAWING AND SPECIFICATIONS, HEREIN, ARE THE PROPERTY OF DIGITAL EQUIPMENT CORPORATION AND SHALL NOT BE REPRODUCED OR COPIED OR USED IN WHOLE OR IN PART AS THE BASIS FOR THE MANUFACTURE OR SALE OF ITEMS WITHOUT WRITTEN PERMISSION. COPYRIGHT © 1977, DIGITAL EQUIPMENT CORPORATION"

REVISIONS		
CHK	CHANGE NO.	REV
KK	M8514-00001	A
J. ALLEN		

digital

DRN J. Toomey DATE 11-MAY-77 ENG. DATE 16 MAY 77
CHK DATE 6 MAY 77 BOARD LOCATION: 4 OF 27
SHEET 1 OF 1
CHA4EX.DRW[4,541] 11-MAY-77 10:40 NEXT HIGHER ASSEMBLY:
FIRST USED ON OPTION/MODEL: KL10 B-DD-M8514-0

TITLE: CACHE DIR PARITY BITS

SIZE	CODE	NUMBER	REV.
D	CS	M8514-0-CHA4	A

39 MR

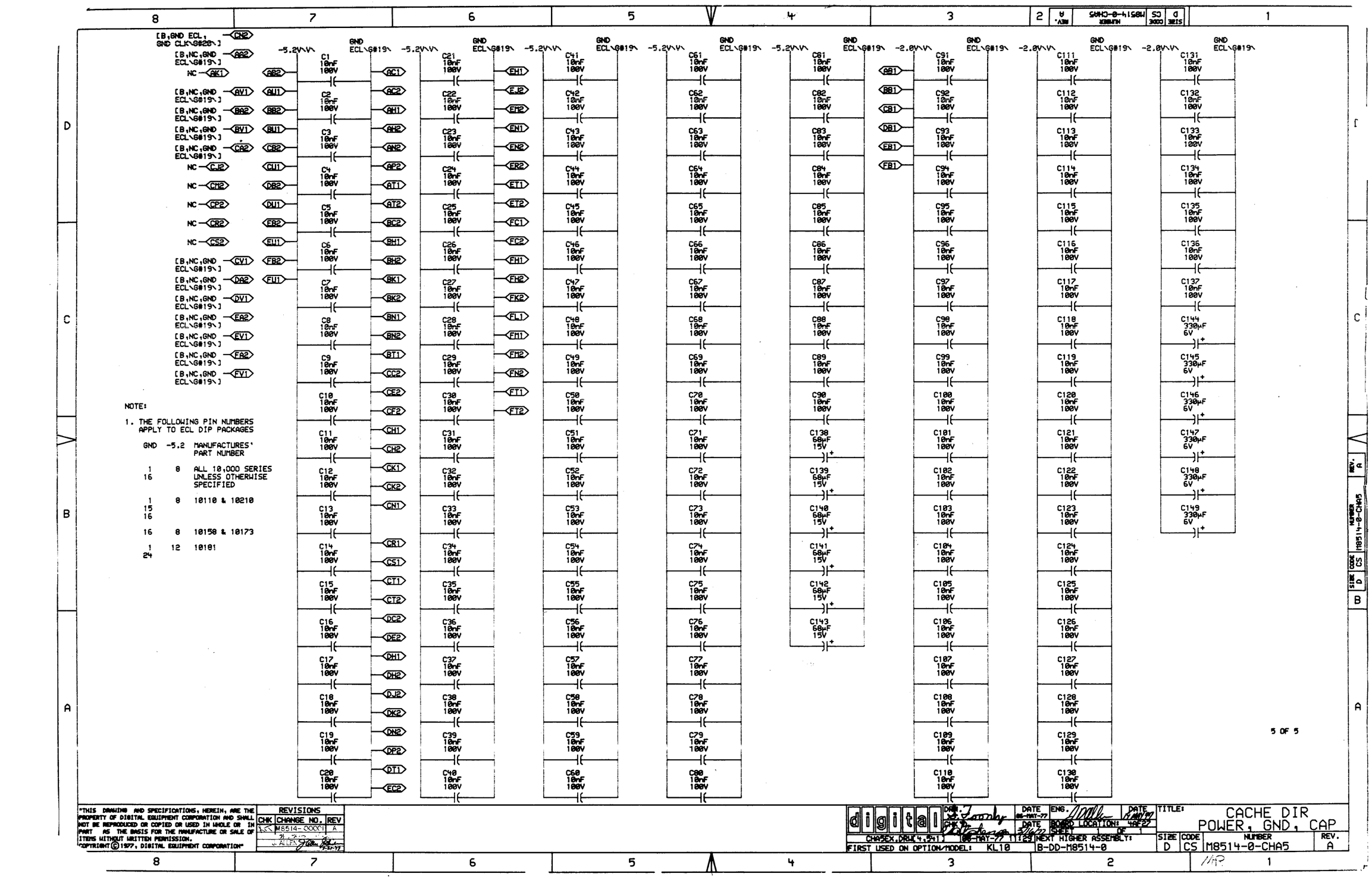
[B,GND ECL, GND CLK\G#20\] CN2
[B,NC,GND ECL\G#19\] AA2
NC AK1
[B,NC,GND ECL\G#19\] AV1
[B,NC,GND ECL\G#19\] BA2
[B,NC,GND ECL\G#19\] BV1
[B,NC,GND ECL\G#19\] CA2
NC CJ2
NC CM2
NC CP2
NC CR2
NC CS2
[B,NC,GND ECL\G#19\] CV1
[B,NC,GND ECL\G#19\] DA2
[B,NC,GND ECL\G#19\] DV1
[B,NC,GND ECL\G#19\] EA2
[B,NC,GND ECL\G#19\] EV1
[B,NC,GND ECL\G#19\] FA2
[B,NC,GND ECL\G#19\] FV1
-5.2V\V\
GND ECL\G#19\
-2.0V\V\
AB2 AU1 BB2 BU1 CB2 CU1 DB2 DU1 EB2 EU1 FB2 FU1
AC1 AC2 AH1 AH2 AN2 AP2 AT1 AT2 BC2 BH1 BH2 BK1 BK2 BN1 BN2 BT1 CC2 CE2 CF2 CH1 CH2 CK1 CK2 CN1 CR1 CS1 CT1 CT2 DC2 DE2 DH1 DH2 DJ2 DK2 DN2 DP2 DT1 EC2
EH1 EJ2 EM2 EN1 EN2 ER2 ET1 ET2 FC1 FC2 FH1 FH2 FK2 FL1 FM1 FM2 FN2 FT1 FT2
AB1 BB1 CB1 DB1 EB1 FB1
C1 C2 C3 C4 C5 C6 C7 C8 C9 C10 C11 C12 C13 C14 C15 C16 C17 C18 C19 C20
C21 C22 C23 C24 C25 C26 C27 C28 C29 C30 C31 C32 C33 C34 C35 C36 C37 C38 C39 C40
C41 C42 C43 C44 C45 C46 C47 C48 C49 C50 C51 C52 C53 C54 C55 C56 C57 C58 C59 C60
C61 C62 C63 C64 C65 C66 C67 C68 C69 C70 C71 C72 C73 C74 C75 C76 C77 C78 C79 C80
C81 C82 C83 C84 C85 C86 C87 C88 C89 C90
C91 C92 C93 C94 C95 C96 C97 C98 C99 C100 C101 C102 C103 C104 C105 C106 C107 C108 C109 C110
C111 C112 C113 C114 C115 C116 C117 C118 C119 C120 C121 C122 C123 C124 C125 C126 C127 C128 C129 C130
C131 C132 C133 C134 C135 C136 C137 C144 C145 C146 C147 C148 C149
10nF 100V
330µF 6V
68µF 15V
NOTE:
1. THE FOLLOWING PIN NUMBERS APPLY TO ECL DIP PACKAGES
GND -5.2 MANUFACTURES' PART NUMBER
1 16 8 ALL 10,000 SERIES UNLESS OTHERWISE SPECIFIED
1 15 16 8 10110 & 10210
16 8 10158 & 10173
1 24 12 10181
5 OF 5
"THIS DRAWING AND SPECIFICATIONS, HEREIN, ARE THE PROPERTY OF DIGITAL EQUIPMENT CORPORATION AND SHALL NOT BE REPRODUCED OR COPIED OR USED IN WHOLE OR IN PART AS THE BASIS FOR THE MANUFACTURE OR SALE OF ITEMS WITHOUT WRITTEN PERMISSION.
"COPYRIGHT © 1977, DIGITAL EQUIPMENT CORPORATION"
REVISIONS
CHK CHANGE NO. REV
M8514-00001 A
J. ALLEN 17-JUL-77
digital
DRW. DATE 05-MAY-77
ENG. DATE
CHK DATE
BOARD LOCATION: 4AF22
SHEET 1 OF 1
CHASEX.DRW[4,541] 05-MAY-77 11:23
NEXT HIGHER ASSEMBLY: B-DD-M8514-0
FIRST USED ON OPTION/MODEL: KL10
TITLE: CACHE DIR POWER, GND, CAP
SIZE D CODE CS NUMBER M8514-0-CHA5 REV. A
MAP

RESISTOR LOC(PIN)	SHOWN ON DRW#	REF	VALUE	TERMINATES SIGNAL
R32(1)	CHA4	C6	68Ω	%E1(15)
R110(1)	CHA2	B1	56Ω	%E31(13)
R111(1)	CHA2	B1	56Ω	%E31(14)
R80(1)	CHA2	D1	56Ω	%E32(13)
R81(1)	CHA2	D1	56Ω	%E32(14)
R65(1)	CHA1	B1	56Ω	%E33(13)
R66(1)	CHA1	B1	56Ω	%E33(14)
R47(1)	CHA1	D1	56Ω	%E34(13)
R48(1)	CHA1	C1	56Ω	%E34(14)
R30(1)	CHA3	C1	56Ω	-A H
R29(1)	CHA4	C3	68Ω	-B H
R89(1)	CHA3	D2	56Ω	-C H
R124(1)	CHA4	C6	68Ω	CHA TERM 01
R115(1)	CHA4	B6	68Ω	CHA TERM 03
R105(1)	CHA4	B6	68Ω	CHA TERM 04
R104(1)	CHA4	B6	68Ω	CHA TERM 05
R116(1)	CHA4	B6	68Ω	CHA TERM 06
R113(1)	CHA4	B6	68Ω	CHA TERM 07
R106(1)	CHA4	B6	68Ω	CHA TERM 08
R102(1)	CHA4	B6	68Ω	CHA TERM 09
R103(1)	CHA4	B6	68Ω	CHA TERM 10
R107(1)	CHA4	B6	68Ω	CHA TERM 11
R55(1)	CHA1	B7	56Ω	CHA1 ADR 27 0 H
R72(1)	CHA1	B7	56Ω	CHA1 ADR 27 1 H
R87(1)	CHA1	B7	56Ω	CHA1 ADR 27 2 H
R121(1)	CHA1	A7	56Ω	CHA1 ADR 27 3 H
R40(1)	CHA1	A7	56Ω	CHA1 ADR 27 A H
R38(1)	CHA1	A7	56Ω	CHA1 ADR 27 B H
R54(1)	CHA1	A7	56Ω	CHA1 ADR 28 0 H
R71(1)	CHA1	A7	56Ω	CHA1 ADR 28 1 H
R86(1)	CHA1	A7	56Ω	CHA1 ADR 28 2 H
R120(1)	CHA1	A7	56Ω	CHA1 ADR 28 3 H
R7(1)	CHA1	A7	56Ω	CHA1 ADR 28 A H
R34(1)	CHA1	A7	56Ω	CHA1 ADR 28 B H
R53(1)	CHA1	B5	56Ω	CHA1 ADR 29 0 H
R70(1)	CHA1	B4	56Ω	CHA1 ADR 29 1 H
R85(1)	CHA1	B4	56Ω	CHA1 ADR 29 2 H
R119(1)	CHA1	A5	56Ω	CHA1 ADR 29 3 H
R76(1)	CHA1	A4	56Ω	CHA1 ADR 29 A H
R20(1)	CHA1	A4	56Ω	CHA1 ADR 29 B H

RESISTOR LOC(PIN)	SHOWN ON DRW#	REF	VALUE	TERMINATES SIGNAL
R56(1)	CHA1	A5	56Ω	CHA1 ADR 30 0 H
R73(1)	CHA1	A4	56Ω	CHA1 ADR 30 1 H
R88(1)	CHA1	A4	56Ω	CHA1 ADR 30 2 H
R122(1)	CHA1	A5	56Ω	CHA1 ADR 30 3 H
R74(1)	CHA1	A4	56Ω	CHA1 ADR 30 A H
R33(1)	CHA1	A4	56Ω	CHA1 ADR 30 B H
R52(1)	CHA2	B7	56Ω	CHA2 ADR 31 0 H
R69(1)	CHA2	B7	56Ω	CHA2 ADR 31 1 H
R84(1)	CHA2	B6	56Ω	CHA2 ADR 31 2 H
R118(1)	CHA2	B7	56Ω	CHA2 ADR 31 3 H
R75(1)	CHA2	B7	56Ω	CHA2 ADR 31 A H
R37(1)	CHA2	B6	56Ω	CHA2 ADR 31 B H
R51(1)	CHA2	A7	56Ω	CHA2 ADR 32 0 H
R68(1)	CHA2	A7	56Ω	CHA2 ADR 32 1 H
R83(1)	CHA2	A6	56Ω	CHA2 ADR 32 2 H
R117(1)	CHA2	A7	56Ω	CHA2 ADR 32 3 H
R39(1)	CHA2	A7	56Ω	CHA2 ADR 32 A H
R35(1)	CHA2	A6	56Ω	CHA2 ADR 32 B H
R50(1)	CHA2	B5	56Ω	CHA2 ADR 33 0 H
R67(1)	CHA2	B4	56Ω	CHA2 ADR 33 1 H
R82(1)	CHA2	B4	56Ω	CHA2 ADR 33 2 H
R112(1)	CHA2	B5	56Ω	CHA2 ADR 33 3 H
R5(1)	CHA2	B4	56Ω	CHA2 ADR 33 A H
R36(1)	CHA2	B4	56Ω	CHA2 ADR 33 B H
R46(1)	CHA2	B2	68Ω	-CHA2 WRITE 0 A H
R49(1)	CHA2	B2	68Ω	-CHA2 WRITE 0 B H
R27(1)	CHA2	B2	68Ω	-CHA2 WRITE 0 C H
R63(1)	CHA2	B2	68Ω	-CHA2 WRITE 1 A H
R64(1)	CHA2	B2	68Ω	-CHA2 WRITE 1 B H
R127(1)	CHA2	B2	68Ω	-CHA2 WRITE 1 C H
R78(1)	CHA2	A2	68Ω	-CHA2 WRITE 2 A H
R79(1)	CHA2	A2	68Ω	-CHA2 WRITE 2 B H
R128(1)	CHA2	A2	68Ω	-CHA2 WRITE 2 C H
R108(1)	CHA2	A2	68Ω	-CHA2 WRITE 3 A H
R109(1)	CHA2	A2	68Ω	-CHA2 WRITE 3 B H
R31(1)	CHA2	A2	68Ω	-CHA2 WRITE 3 C H
R3(1)	CHA3	D7	68Ω	CHA3 CSH 0 WD 0 WR H
R4(1)	CHA3	D6	68Ω	CHA3 CSH 0 WD 1 WR H
R13(1)	CHA3	D5	68Ω	CHA3 CSH 0 WD 2 WR H
R15(1)	CHA3	D5	68Ω	CHA3 CSH 0 WD 3 WR H

RESISTOR LOC(PIN)	SHOWN ON DRW#	REF	VALUE	TERMINATES SIGNAL
R90(1)	CHA3	B7	68Ω	-CHA3 CSH 0 WR WR H
R2(1)	CHA3	C7	68Ω	CHA3 CSH 1 WD 0 WR H
R1(1)	CHA3	C6	68Ω	CHA3 CSH 1 WD 1 WR H
R14(1)	CHA3	C5	68Ω	CHA3 CSH 1 WD 2 WR H
R10(1)	CHA3	C5	68Ω	CHA3 CSH 1 WD 3 WR H
R6(1)	CHA3	A7	68Ω	-CHA3 CSH 1 WR WR H
R16(1)	CHA3	D4	68Ω	CHA3 CSH 2 WD 0 WR H
R17(1)	CHA3	D3	68Ω	CHA3 CSH 2 WD 1 WR H
R19(1)	CHA3	D2	68Ω	CHA3 CSH 2 WD 2 WR H
R18(1)	CHA3	D2	68Ω	CHA3 CSH 2 WD 3 WR H
R57(1)	CHA3	A7	68Ω	-CHA3 CSH 2 WR WR H
R8(1)	CHA3	C4	68Ω	CHA3 CSH 3 WD 0 WR H
R9(1)	CHA3	C3	68Ω	CHA3 CSH 3 WD 1 WR H
R42(1)	CHA3	C2	68Ω	CHA3 CSH 3 WD 2 WR H
R11(1)	CHA3	C2	68Ω	CHA3 CSH 3 WD 3 WR H
R26(1)	CHA3	A7	68Ω	-CHA3 CSH 3 WR WR H
R20(1)	CHA3	B6	68Ω	-CHA3 CSH WR WD 0 SEL H
R22(1)	CHA3	B6	68Ω	-CHA3 CSH WR WD 1 SEL H
R23(1)	CHA3	A6	68Ω	-CHA3 CSH WR WD 2 SEL H
R24(1)	CHA3	A6	68Ω	-CHA3 CSH WR WD 3 SEL H
R58(1)	CHA3	A4	68Ω	CHA3 CSH WR WR DATA A H
R25(1)	CHA3	A4	68Ω	CHA3 CSH WR WR DATA B H
R91(1)	CHA4	C7	68Ω	-CON WR EVEN PAR DIR H
R44(1)	CHA3	B8	68Ω	-CSH 0 WR EN H
R41(1)	CHA3	B8	68Ω	-CSH 1 WR EN H
R60(1)	CHA3	A8	68Ω	-CSH 2 WR EN H
R61(1)	CHA3	A8	68Ω	-CSH 3 WR EN H
R43(1)	CHA2	B2	68Ω	-CSH ADR WR PULSE H
R12(1)	CHA3	A1	68Ω	-CSH WR OUT EN H
R98(1)	CHA3	B6	68Ω	CSH WR SEL ALL H
R96(1)	CHA3	B6	68Ω	CSH WR WD 0 EN H
R97(1)	CHA3	B6	68Ω	CSH WR WD 1 EN H
R95(1)	CHA3	A6	68Ω	CSH WR WD 2 EN H
R94(1)	CHA3	A6	68Ω	CSH WR WD 3 EN H
R93(1)	CHA3	A5	68Ω	CSH WR WR DATA H
R59(1)	CHA3	B8	68Ω	-CSH WR WR PULSE H
R99(1)	CHA1	B7	68Ω	MBX CSH ADR 27 H
R100(1)	CHA1	A7	68Ω	MBX CSH ADR 28 H
R62(1)	CHA1	B5	68Ω	MBX CSH ADR 29 H
R45(1)	CHA1	A5	68Ω	MBX CSH ADR 30 H

RESISTOR LOC(PIN)	SHOWN ON DRW#	REF	VALUE	TERMINATES SIGNAL
R21(1)	CHA2	B7	68Ω	MBX CSH ADR 31 H
R101(1)	CHA2	A7	68Ω	MBX CSH ADR 32 H
R77(1)	CHA2	B5	68Ω	MBX CSH ADR 33 H
R92(1)	CHA4	C7	68Ω	PMA 14-26 PAR H
R114(1)	CHA4	B6	68Ω	PT ACCESS H
R123(1)	CHA4	C6	68Ω	-PT MATCH H
R126(1)	CHA4	B6	68Ω	PT SOFTWARE H
R125(1)	CHA4	C6	68Ω	PT WRITABLE H

NOTE:

1. ALL TERMINATORS HAVE PIN TWO CONNECTED TO -2.0V AND ARE 5% 1/4WATT UNLESS OTHERWISE SPECIFIED
2. ENTRIES ARE SORTED BY SIGNAL NAME
3. % INDICATES OUTPUT OF DIP LOC AND () INDICATES PIN NUMBER

"THIS DRAWING AND SPECIFICATIONS, HEREIN, ARE THE PROPERTY OF DIGITAL EQUIPMENT CORPORATION AND SHALL NOT BE REPRODUCED OR COPIED OR USED IN WHOLE OR IN PART AS THE BASIS FOR THE MANUFACTURE OR SALE OF ITEMS WITHOUT WRITTEN PERMISSION. COPYRIGHT © 1977, DIGITAL EQUIPMENT CORPORATION"

REVISIONS		
CHK	CHANGE NO.	REV
J.A.	M8514 - 00001	A
J. ALLEN		

digital

DRN. C. Smith DATE 03-MAY-77 ENG. DATE
CHK'D. DATE BOARD LOCATION: 11AF27
SHEET 1 OF
M8514.DRW[4,541] 03-MAY-77 13:33 NEXT HIGHER ASSEMBLY:
FIRST USED ON OPTION/MODEL: KL10 B-DD-M8514-0

TITLE: CACHE DIR TERMINATORS

SIZE	CODE	NUMBER	REV.
D	CS	M8514-0-RES	A

MR

REVISION CONTROL SHEET

CUSTOMER PRINT SET	MFG SET	DRAWING NO	NO OF SHT	DESCRIPTION	OPTION NO/FILE DATE	REVISIONS
			-	MODULE REVISION		A
		D-UA-M8549-YE-Ø	5	CACHE ADDRESS SUBSTITUTE BD.		-
		D-CS-M8549-YE-CHAS	1	CACHE ADDRESS SUBSTITUTE		-
		K-CO-M8549-YE-4	1	CACHE ADDRESS SUBSTITUTE BD. (CALDEC DATA BASE)		A
		D-AH-M8549-YE-5	4	CACHE ADDRESS SUBSTITUTE BD.		-
		B-MH-M8549-YE-6	1	MODULE ECO HISTORY		-
		5011595	-	ETCHED CIRCUIT BOARD		A
		P00-M8549-YE	-	PROCESS SHEET (REF ONLY)		-

CUSTOMER PRINT SET CODES

X = PRINT OF DOCUMENT INCLUDED IN PRINT SET
C = INCLUDES ALL PRINTS INDICATED ON DOCUMENT
S = CONFIDENTIAL AUTHORIZED SIGNATURE REQUIRED

ECO NO

ORIG

TITLE		SIZE	CODE	NUMBER	REV
CACHE ADDRESS SUBSTITUTE BD.	SHEET 2 OF 2	B	DD	M8549-YE	

MR

"THIS DRAWING AND SPECIFICATIONS, HEREIN, ARE THE PROPERTY OF DIGITAL EQUIPMENT CORPORATION AND SHALL NOT BE REPRODUCED OR COPIED OR USED IN WHOLE OR IN PART AS THE BASIS FOR THE MANUFACTURE OR SALE OF ITEMS WITHOUT WRITTEN PERMISSION. COPYRIGHT © 1975, DIGITAL EQUIPMENT CORPORATION"

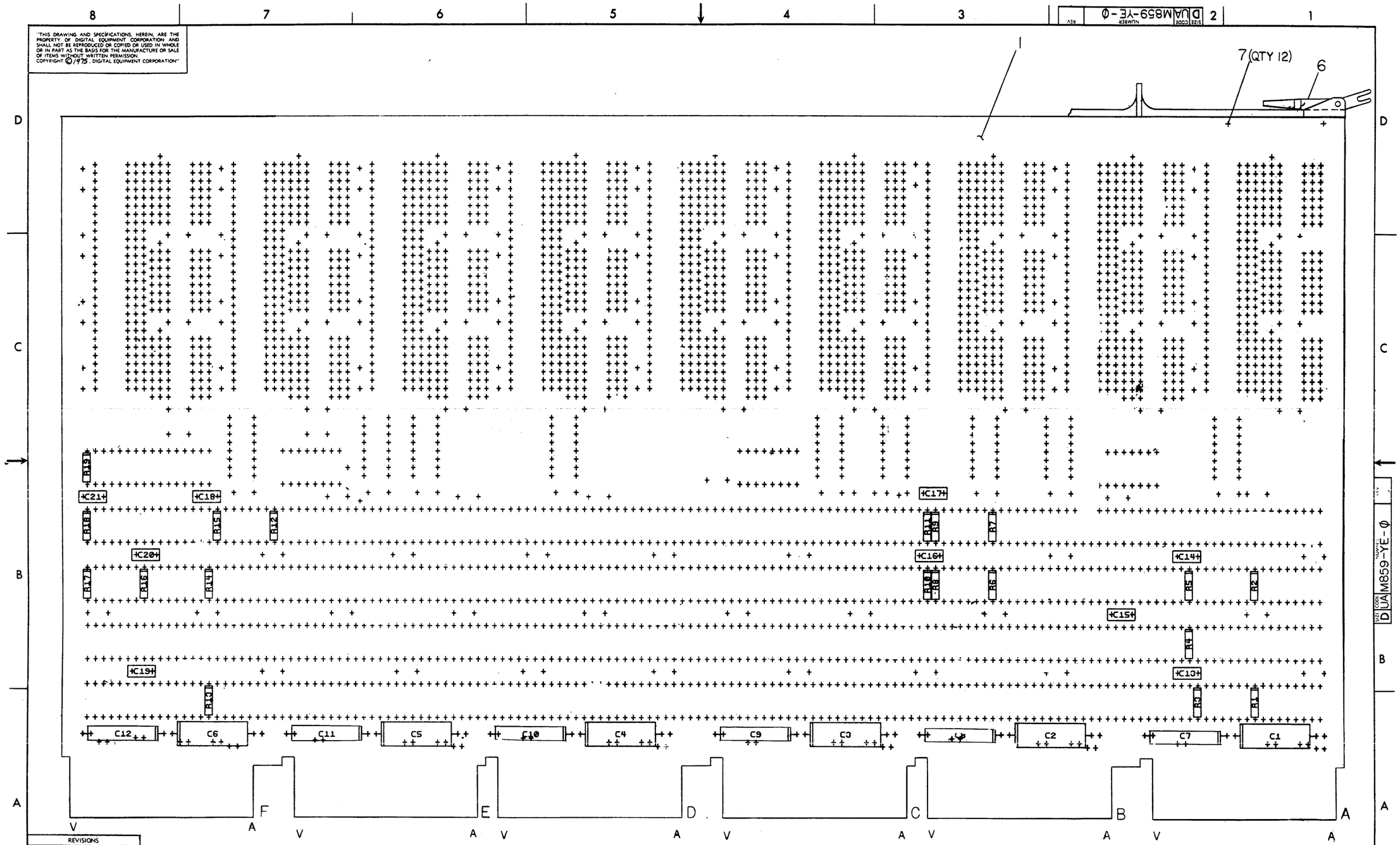

REVISIONS		
CHK	CHANGE NO	REV

TITLE	SIZE	CODE	NUMBER	REV.
CACHE ADDRESS SUBSTITUTE BD.	D	UA	M8549-YE-Ø	
SCALE — / —	SHEET 2 OF 5	DIST.		

43

MR1

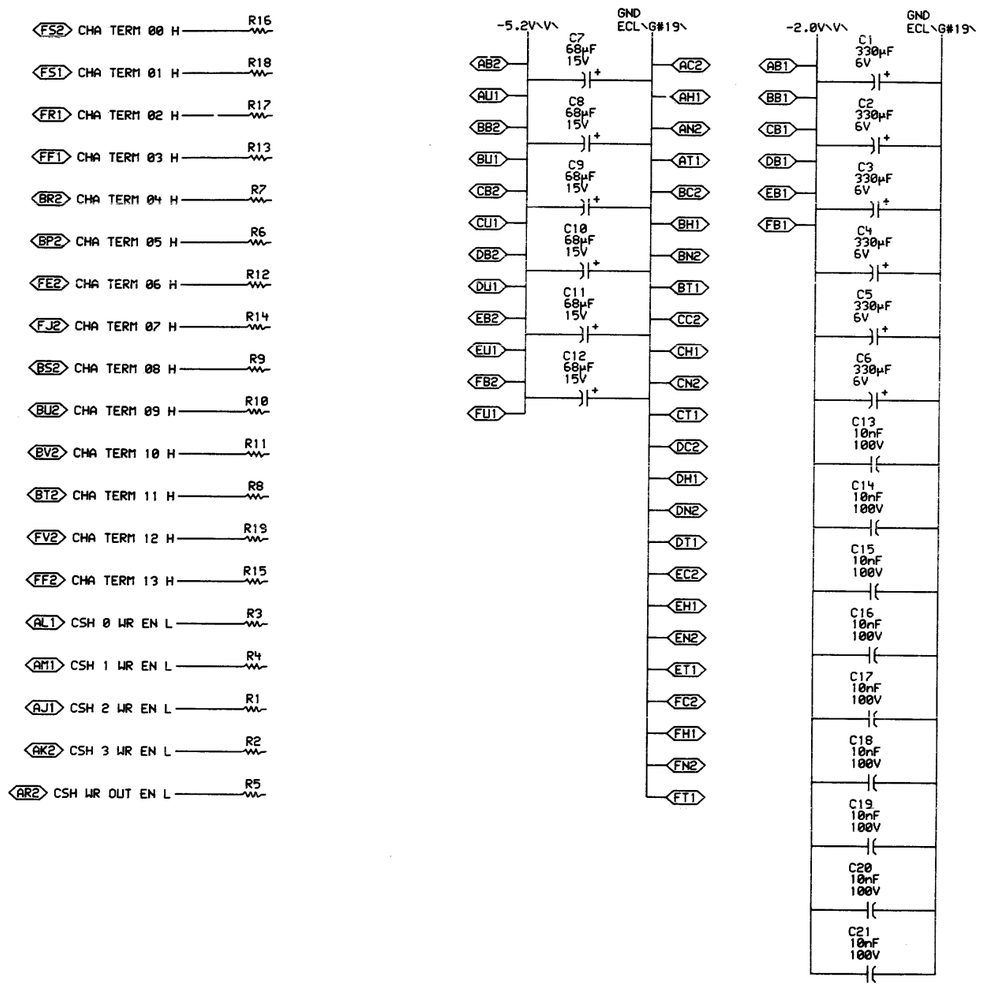

NOTE:

1. THE FOLLOWING PIN NUMBERS APPLY TO ECL DIP PACKAGES

GND	-5.2	MANUFACTURES' PART NUMBER
1 16	8	ALL 10,000 SERIES UNLESS OTHERWISE SPECIFIED
1 15 16	8	10110 & 10210
16	8	10158 & 10173

2. THE FOLLOWING PINS ARE NC:
   AA2 AV1
   BA2 BV1
   CA2 CV1
   DA2 DV1
   EA2 EV1
   FA2 FV1

"THIS DRAWING AND SPECIFICATIONS, HEREIN, ARE THE PROPERTY OF DIGITAL EQUIPMENT CORPORATION AND SHALL NOT BE REPRODUCED OR COPIED OR USED IN WHOLE OR IN PART AS THE BASIS FOR THE MANUFACTURE OR SALE OF ITEMS WITHOUT WRITTEN PERMISSION.
COPYRIGHT © 1975, DIGITAL EQUIPMENT CORPORATION"

REVISIONS		
CHK	CHANGE NO.	REV

digital

DRN. DATE 12-21-75 ENG. DATE 2-21-75
CHK'D DATE 2-21-75 BOARD LOCATION: SHEET 1 OF 1
CHASI[4,121] 20-FEB-75 20:54 NEXT HIGHER ASSEMBLY: B-DD-M8549-YE
FIRST USED ON OPTION/MODEL: KL10

TITLE: CHACHE ADDRESS SUBSITUTE

SIZE	CODE	NUMBER	REV.
D	CS	M8549-YE-CHAS	

MR 1

44

REVISION CONTROL SHEET

CUSTOMER PRINT SET	MFG SET	DRAWING NO	NO OF SHT	DESCRIPTION	OPTION NO/FILE DATE	REVISIONS	
		— " —	-	MODULE REVISION		A	B
		D-UA-M8515-Ø-Ø	5	CACHE EXTENSION		-	A
		D-CS-M8515-Ø-CHX1	1	CSH ADR COMPR & VAL BIT MIXER		-	A
		D-CS-M8515-Ø-CHX2	1	CSH VALID BITS AND ADR MIXERS		-	A
		D-CS-M8515-Ø-CHX3	1	CACHE USE BITS		-	A
		D-CS-M8515-Ø-CHX4	1	CSH DIR PAR NET AND DIAG MIXERS		-	A
		D-CS-M8515-Ø-CHX5	1	CACHE DIRECTORY POWER AND GND	-	-	A
		D-CS-M8515-Ø-RES	1	CACHE EXTENTION TERMINATORS		-	A
		K-CO-M8515-Ø-4	1	CACHE EXTENSION (CALDEC DATA BASE)		C	C
		D-AH-M8515-Ø-5	4	CACHE EXTENSION		A	A
		B-MH-M8515-Ø-6	1	MODULE ECO HISTORY		-	A
		5010525	-	ETCH CIRCUIT BOARD		C	C
		P00-M8515-00		PROCESS SHEET (REF ONLY)		-	—

CUSTOMER PRINT SET CODES	
	X = PRINT OF DOCUMENT INCLUDED IN PRINT SET C = INCLUDES ALL PRINTS INDICATED ON DOCUMENT S = CONFIDENTIAL AUTHORIZED SIGNATURE REQUIRED

ECO NO	ORIG	00001

TITLE		SIZE	CODE	NUMBER	REV
CACHE EXTENSION	SHEET 2 OF 2	B	DD	M8515-Ø	A

45

MR

"THIS DRAWING AND SPECIFICATIONS, HEREIN, ARE THE PROPERTY OF DIGITAL EQUIPMENT CORPORATION AND SHALL NOT BE REPRODUCED OR COPIED OR USED IN WHOLE OR IN PART AS THE BASIS FOR THE MANUFACTURE OR SALE OF ITEMS WITHOUT WRITTEN PERMISSION. COPYRIGHT © 1974 DIGITAL EQUIPMENT CORPORATION"

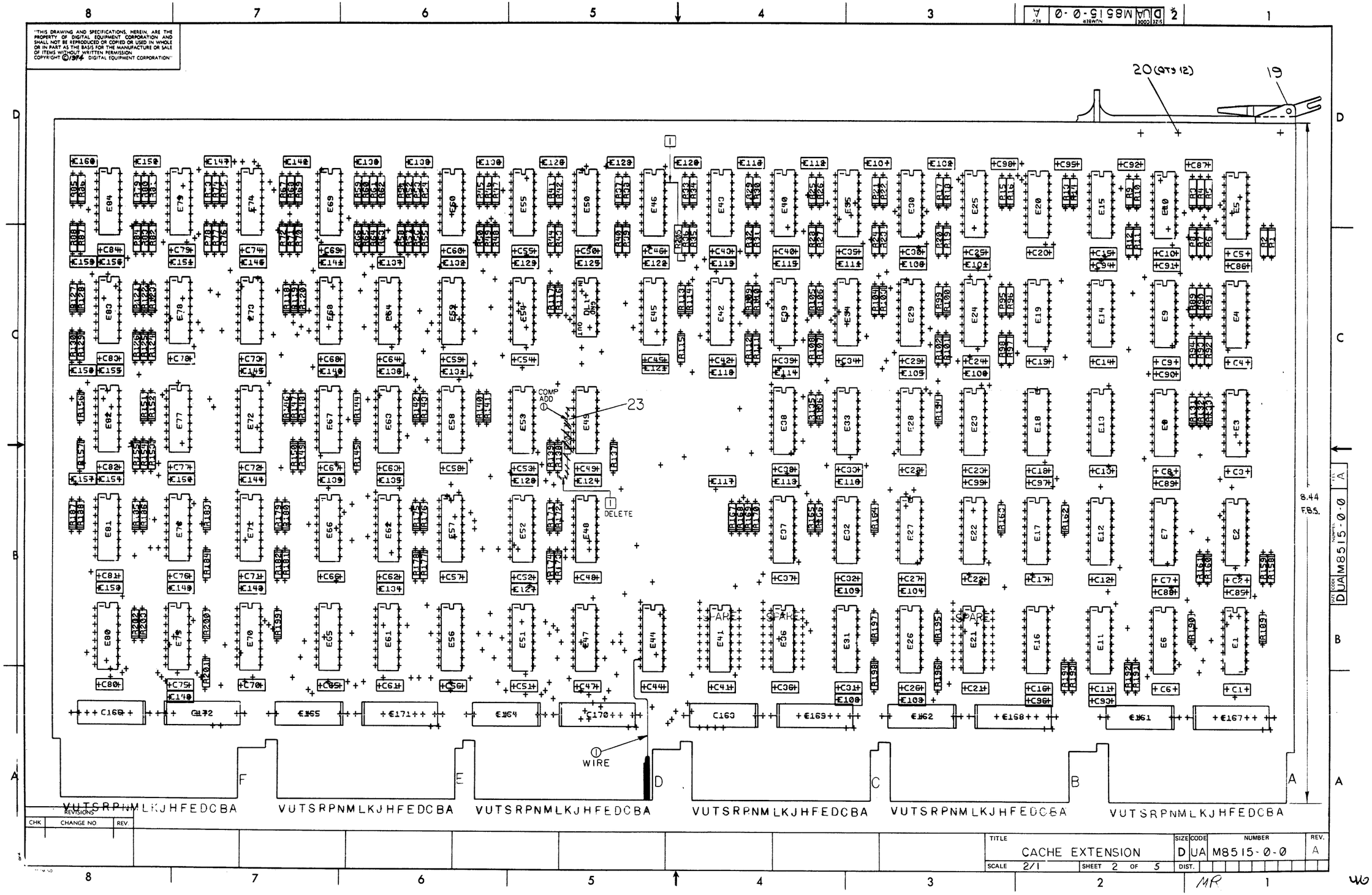

REVISIONS		
CHK	CHANGE NO	REV.

TITLE	SIZE	CODE	NUMBER	REV.
CACHE EXTENSION	D	UA	M8515-0-0	A
SCALE 2/1	SHEET 2 OF 5	DIST.		

MR

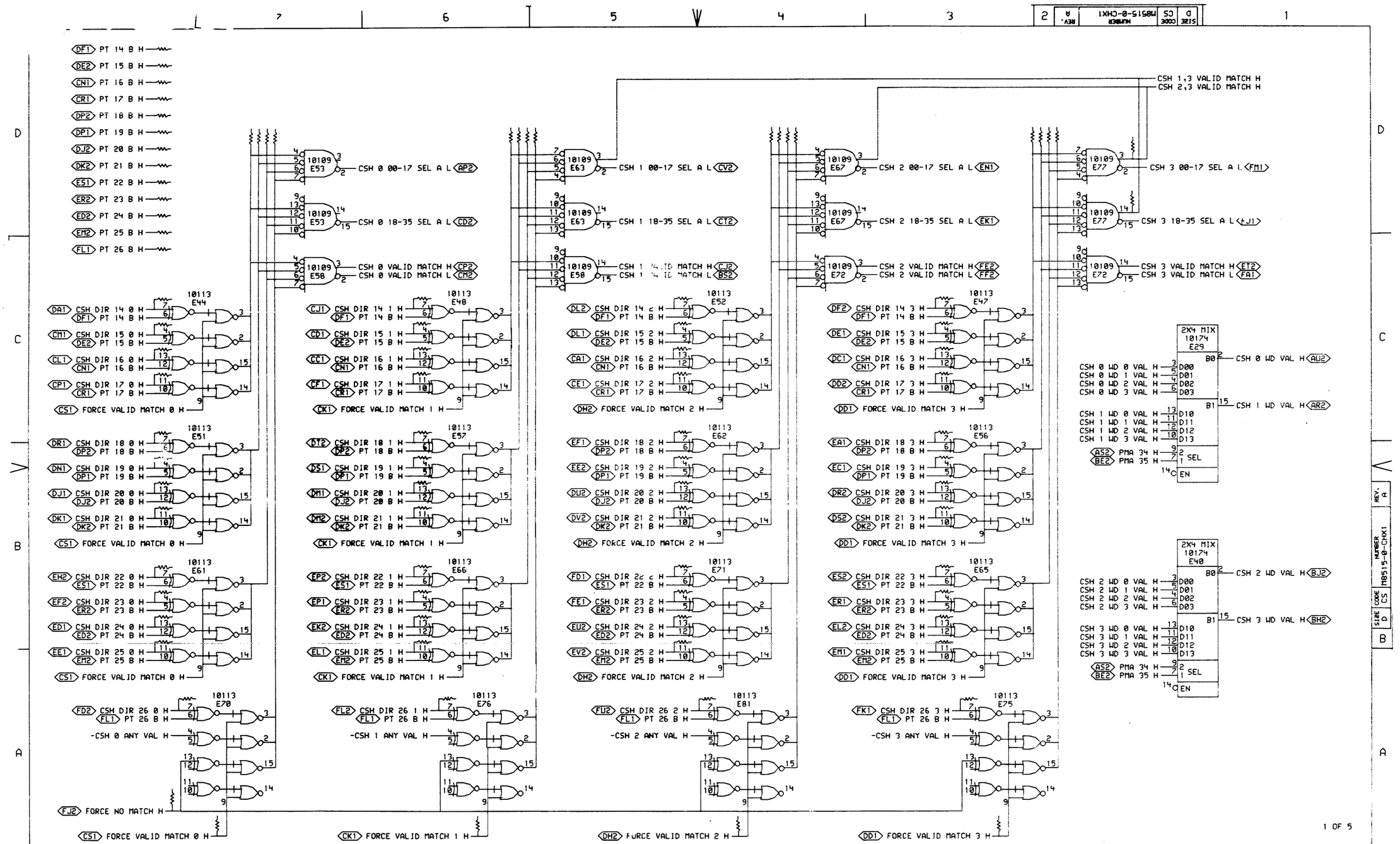

"THIS DRAWING AND SPECIFICATIONS, HEREIN, ARE THE PROPERTY OF DIGITAL EQUIPMENT CORPORATION AND SHALL NOT BE REPRODUCED OR COPIED OR USED IN WHOLE OR IN PART AS THE BASIS FOR THE MANUFACTURE OR SALE OF ITEMS WITHOUT WRITTEN PERMISSION. COPYRIGHT © 1975, DIGITAL EQUIPMENT CORPORATION"

REVISIONS		
CHK	CHANGE NO.	REV
—	M8515-00001	A
	P GUGLIELMI	

digital

DRN: W. Stephenson DATE 4/9/75 ENG. DATE
CHK'D: Erick Allen DATE 4/10/75 BOARD LOCATION: 4AF28 SHEET 1 OF 1
CHX1EX[4,121] 02-APR-75 07:04 NEXT HIGHER ASSEMBLY:
FIRST USED ON OPTION/MODEL: KL10 B-DD-M8515-0

TITLE: CSH ADR COMPR & VAL BIT MIXER

SIZE	CODE	NUMBER	REV.
D	CS	M8515-0-CHX1	A

47

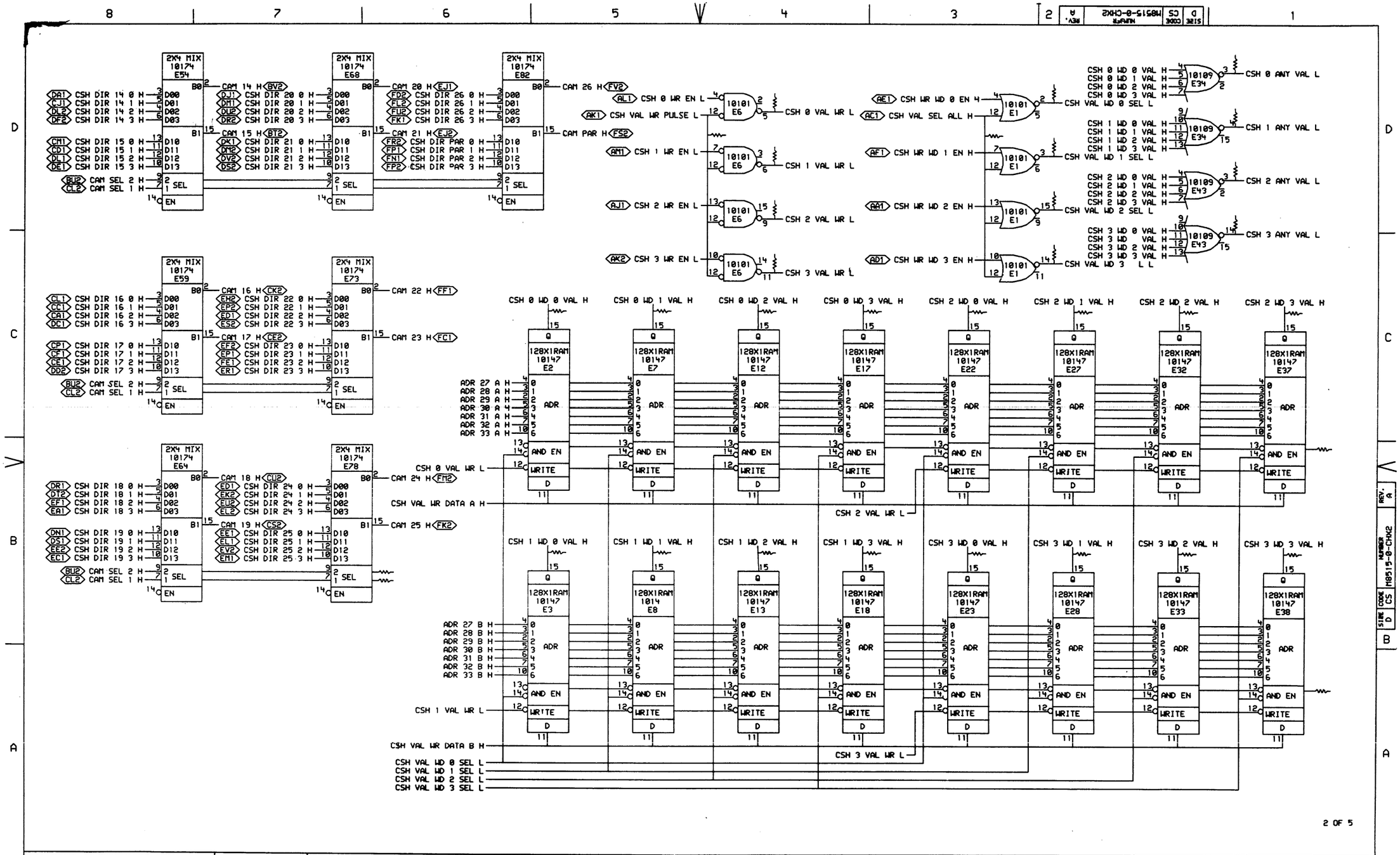

"THIS DRAWING AND SPECIFICATIONS, HEREIN, A THE PROPERTY OF DIGITAL EQUIPMENT CORPORATION AND SHALL NOT BE REPRODUCED OR COPIED OR USED IN WHOLE OR IN PART AS THE BASIS FOR THE MANUFACTURE OR SALE OF ITEMS WITHOUT WRITTEN PERMISSION. COPYRIGHT © 1975, DIGITAL EQUIPMENT CORPORATION"

REVISIONS		
CHK	CHANGE NO.	REV
—	M8515-00001	A
	P.GUGLIELMI	

digital

CHKZEX(4,121) 08-APR-75 07:43

FIRST USED ON OPTION/MODEL: KL10

DRN. M. Stephens DATE 4/2/75
CHK'D. Fred Allen DATE 4/14/75
ENG. M. Sullivan DATE 4/2/75
BOARD LOCATION: 4AF28
SHEET 1 OF 1
NEXT HIGHER ASSEMBLY: B-DD-M8515-0

TITLE: CSH VALID BITS AND ADR MIXERS

SIZE	CODE	NUMBER	REV.
D	CS	M8515-0-CHX2	A

MR 1

48

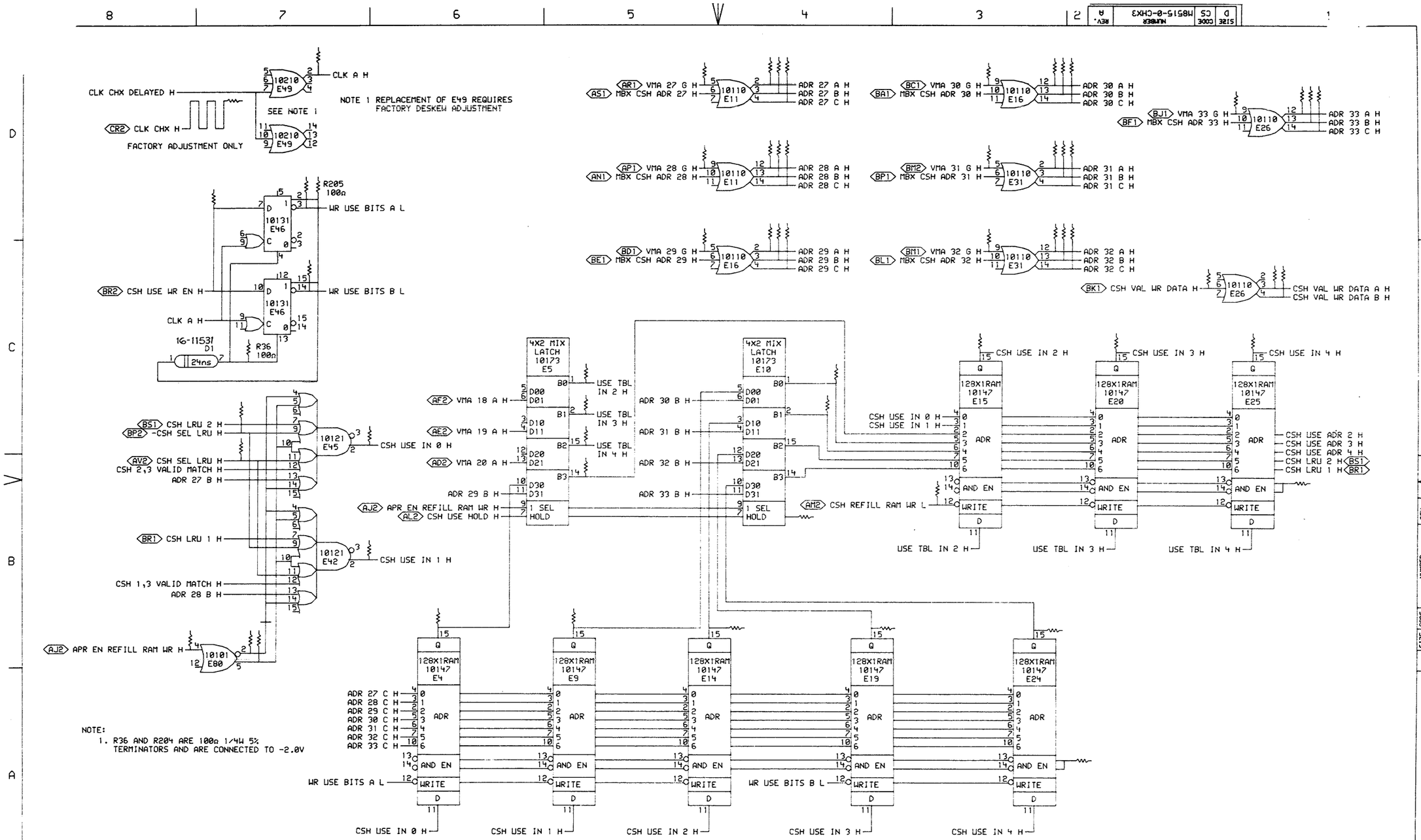

3 OF 5

"THIS DRAWING AND SPECIFICATIONS, HEREIN, ARE THE PROPERTY OF DIGITAL EQUIPMENT CORPORATION AND SHALL NOT BE REPRODUCED OR COPIED OR USED IN WHOLE OR IN PART AS THE BASIS FOR THE MANUFACTURE OR SALE OF ITEMS WITHOUT WRITTEN PERMISSION. COPYRIGHT © 1975, DIGITAL EQUIPMENT CORPORATION"

REVISIONS		
CHK	CHANGE NO.	REV
	M8515-00001	A
	P. GUGLIELMI	

DRN. W. Stephenson DATE 7-9-75 ENG. DATE 7/9/75
CHK'D. DATE 9-10-75 BOARD LOCATION: 4AF28
SHEET 1 OF 1
CHX3EXC(4,121) 29-APR-75 09:51 NEXT HIGHER ASSEMBLY:
FIRST USED ON OPTION/MODEL: KL10 B-DD-M8515-0

TITLE: CACHE USE BITS

SIZE	CODE	NUMBER	REV.
D	CS	M8515-0-CHX3	A

MR

49

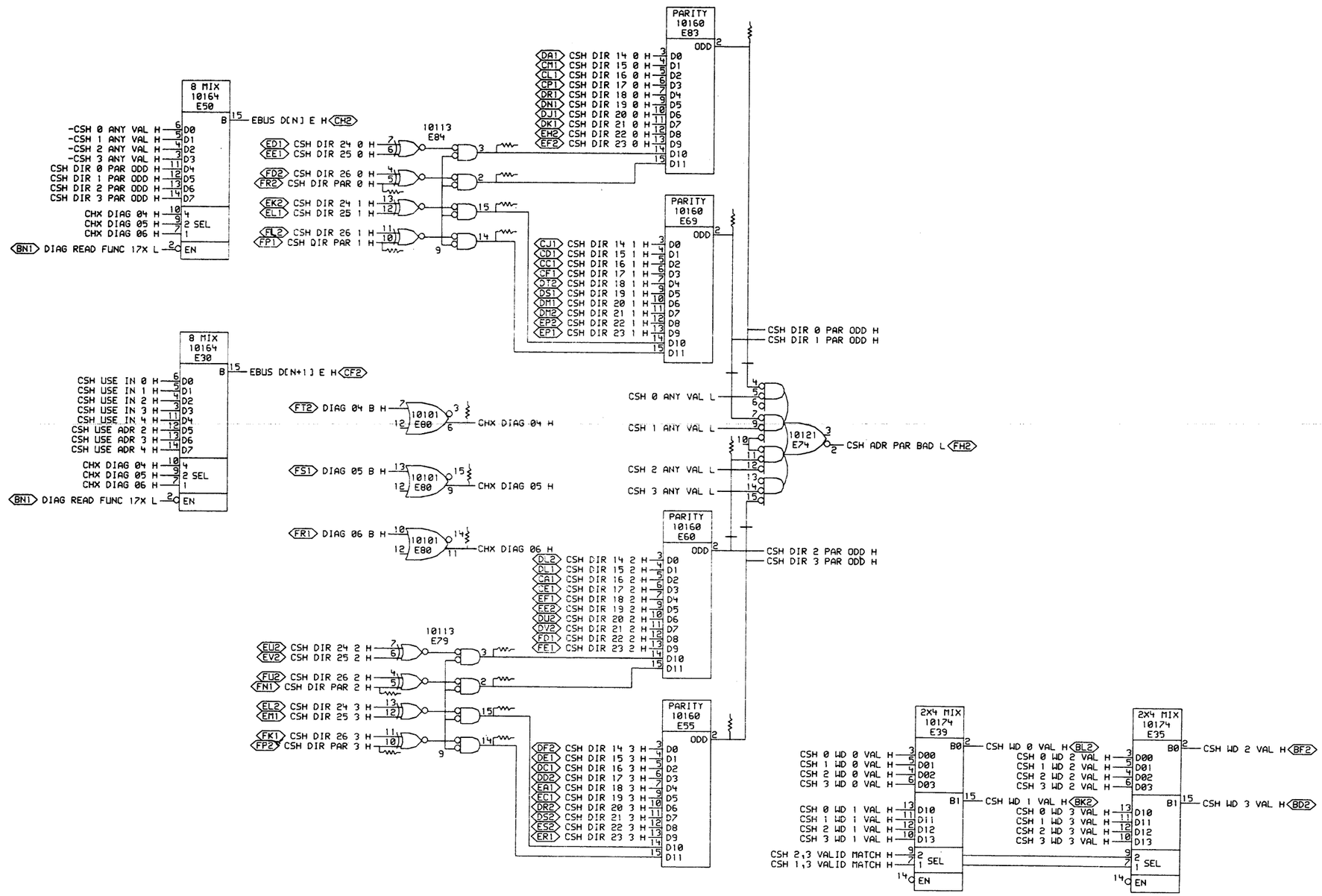

"THIS DRAWING AND SPECIFICATIONS, HEREIN, ARE THE PROPERTY OF DIGITAL EQUIPMENT CORPORATION AND SHALL NOT BE REPRODUCED OR COPIED OR USED IN WHOLE OR IN PART AS THE BASIS FOR THE MANUFACTURE OR SALE OF ITEMS WITHOUT WRITTEN PERMISSION. COPYRIGHT © 1975, DIGITAL EQUIPMENT CORPORATION"

REVISIONS		
CHK	CHANGE NO.	REV
	M8515.00001	A
	P. GUGLIELMI	

digital

DRN	DATE	ENG.	DATE
CHK	DATE	BOARD LOCATION:	
CHX4EXL4.1213	08-APR-75 07:49	SHEET 1 OF 1	
FIRST USED ON OPTION/MODEL: KL10		NEXT HIGHER ASSEMBLY: B-DD-M8515-0	

TITLE: CSH DIR PAR NET AND DIAG MIXERS

SIZE	CODE	NUMBER	REV.
D	CS	M8515-0-CHX4	A

SIZE D CODE CS NUMBER M8515-0-CHX4 REV. A

50

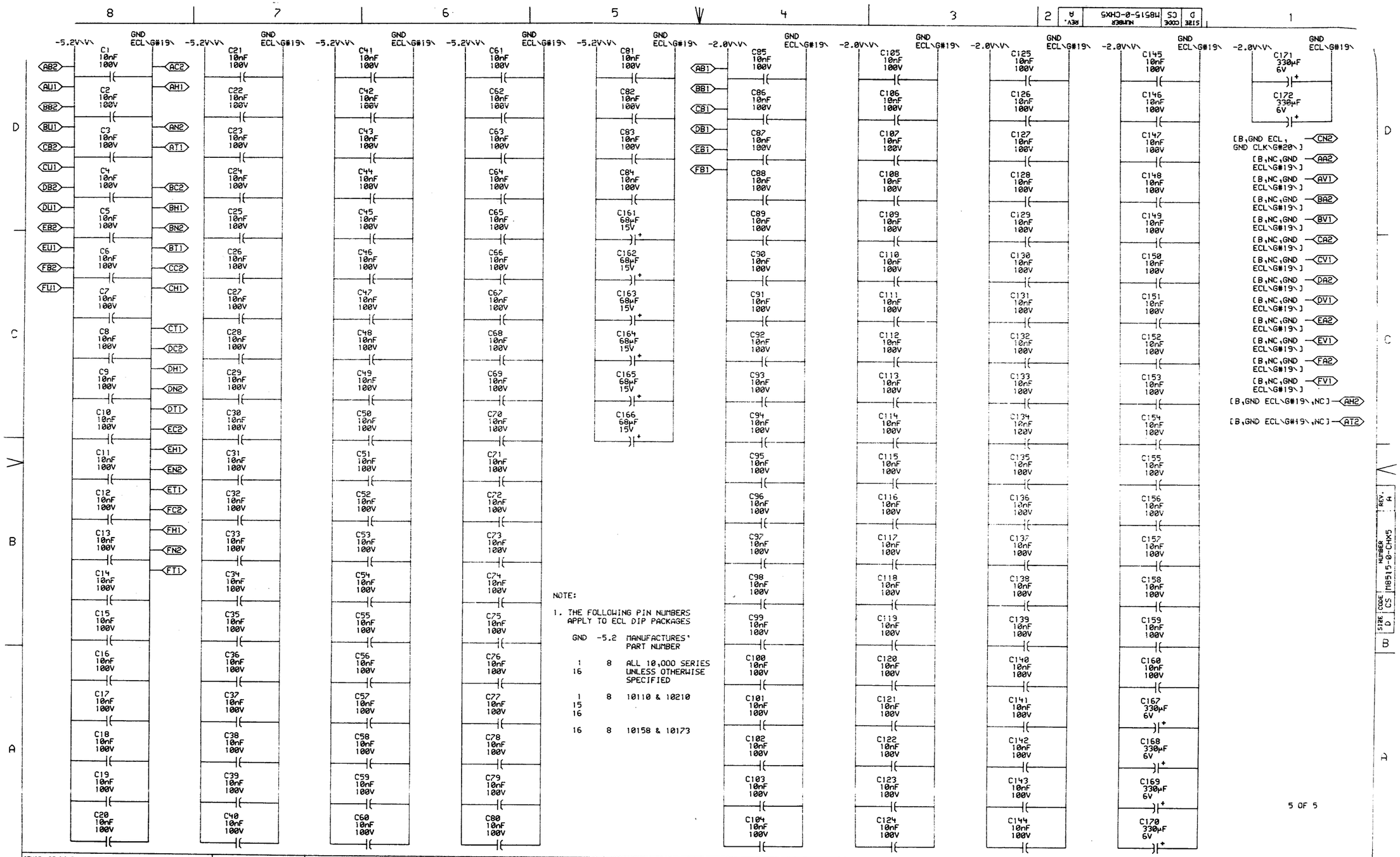

NOTE:

1. THE FOLLOWING PIN NUMBERS APPLY TO ECL DIP PACKAGES

GND	-5.2	MANUFACTURES' PART NUMBER
1 16	8	ALL 10,000 SERIES UNLESS OTHERWISE SPECIFIED
1 15 16	8	10110 & 10210
16	8	10158 & 10173

"THIS DRAWING AND SPECIFICATIONS, HEREIN, ARE THE PROPERTY OF DIGITAL EQUIPMENT CORPORATION AND SHALL NOT BE REPRODUCED OR COPIED OR USED IN WHOLE OR IN PART AS THE BASIS FOR THE MANUFACTURE OR SALE OF ITEMS WITHOUT WRITTEN PERMISSION.
COPYRIGHT © 1975, DIGITAL EQUIPMENT CORPORATION"

REVISIONS		
CHK	CHANGE NO.	REV
—	M8515-00001	A
	P. GUGLIELMI	

digital

DRN	DATE	ENG	DATE
CHK	DATE	BOARD LOCATION:	4AF28
CHX5EX[4,121]	08-APR-75 10:25	SHEET 1 OF 1	
FIRST USED ON OPTION/MODEL: KL10		NEXT HIGHER ASSEMBLY: B-DD-M8515-0	

TITLE: CACHE ADDRESS POWER AND GND

SIZE	CODE	NUMBER	REV.
D	CS	M8515-0-CHX5	A

MR

RESISTOR LOC(PIN)	SHOWN ON DRW#	REF	VALUE	TERMINATES SIGNAL
R9(1)	CHX3EX	B4	68Ω	%E14(15)
R3(1)	CHX3EX	B4	68Ω	%E19(15)
R166(1)	CHX2EX	B1	68Ω	%E2(13)
R97(1)	CHX3EX	A2	68Ω	%E24(13)
R8(1)	CHX3EX	B3	68Ω	%E24(15)
R14(1)	CHX3EX	B1	68Ω	%E25(13)
R133(1)	CHX2EX	A1	68Ω	%E38(13)
R2(1)	CHX3EX	B6	68Ω	%E4(15)
R141(1)	CHX1EX	D7	68Ω	%E44(14)
R36(1)	CHX3EX	C7	100Ω	%E46(13)
R205(1)	CHX3EX	D7	100Ω	%E46(15)
R153(1)	CHX1EX	D2	68Ω	%E47(14)
R145(1)	CHX1EX	D6	68Ω	%E48(14)
R140(1)	CHX1EX	D7	68Ω	%E51(3)
R148(1)	CHX1EX	D4	68Ω	%E52(14)
R154(1)	CHX1EX	D2	68Ω	%E56(14)
R144(1)	CHX1EX	D6	68Ω	%E57(3)
R138(1)	CHX1EX	D7	68Ω	%E61(3)
R146(1)	CHX1EX	D4	68Ω	%E62(14)
R152(1)	CHX1EX	D2	68Ω	%E65(14)
R143(1)	CHX1EX	D5	68Ω	%E66(3)
R139(1)	CHX1EX	D7	68Ω	%E70(15)
R150(1)	CHX1EX	D4	68Ω	%E71(14)
R147(1)	CHX1EX	D2	68Ω	%E75(15)
R142(1)	CHX1EX	D5	68Ω	%E76(3)
R42(1)	CHX4EX	A6	68Ω	%E79(14)
R43(1)	CHX4EX	A6	68Ω	%E79(15)
R51(1)	CHX4EX	B6	68Ω	%E79(2)
R53(1)	CHX4EX	B6	68Ω	%E79(3)
R109(1)	CHX3EX	B7	68Ω	%E80(2)
R112(1)	CHX3EX	B7	68Ω	%E80(5)
R149(1)	CHX1EX	D4	68Ω	%E81(15)
R62(1)	CHX4EX	C6	68Ω	%E84(14)
R61(1)	CHX4EX	D6	68Ω	%E84(15)
R123(1)	CHX4EX	D6	68Ω	%E84(2)
R127(1)	CHX4EX	D6	68Ω	%E84(3)
R10(1)	CHX3EX	B5	68Ω	%E9(15)
R169(1)	CHX3EX	D4	68Ω	ADR 27 A H
R113(1)	CHX3EX	D4	68Ω	ADR 27 B H
R101(1)	CHX3EX	D4	68Ω	ADR 27 C H

RESISTOR LOC(PIN)	SHOWN ON DRW#	REF	VALUE	TERMINATES SIGNAL
R168(1)	CHX3EX	D4	68Ω	ADR 28 A H
R111(1)	CHX3EX	D4	68Ω	ADR 28 B H
R100(1)	CHX3EX	D4	68Ω	ADR 28 C H
R167(1)	CHX3EX	C4	68Ω	ADR 29 A H
R1(1)	CHX3EX	C4	68Ω	ADR 29 B H
R102(1)	CHX3EX	C4	68Ω	ADR 29 C H
R170(1)	CHX3EX	D3	68Ω	ADR 30 A H
R11(1)	CHX3EX	D2	68Ω	ADR 30 B H
R95(1)	CHX3EX	D2	68Ω	ADR 30 C H
R158(1)	CHX3EX	D3	68Ω	ADR 31 A H
R5(1)	CHX3EX	D2	68Ω	ADR 31 B H
R91(1)	CHX3EX	D2	68Ω	ADR 31 C H
R159(1)	CHX3EX	C3	68Ω	ADR 32 A H
R6(1)	CHX3EX	C2	68Ω	ADR 32 B H
R93(1)	CHX3EX	C2	68Ω	ADR 32 C H
R161(1)	CHX3EX	D1	68Ω	ADR 33 A H
R4(1)	CHX3EX	D1	68Ω	ADR 33 B H
R94(1)	CHX3EX	D1	68Ω	ADR 33 C H
R202(1)	CHX3EX	B7	68Ω	APR EN REFILL RAM WR H
R157(1)	CHX2EX	B6	68Ω	CAM SEL 1 H
R155(1)	CHX2EX	B6	68Ω	CAM SEL 2 H
R20(1)	CHX4EX	C6	68Ω	CHX DIAG 04 H
R99(1)	CHX4EX	B6	68Ω	CHX DIAG 05 H
R23(1)	CHX4EX	B6	68Ω	CHX DIAG 06 H
R35(1)	CHX3EX	D7	68Ω	CLK A H
R137(1)	CHX3EX	D7	68Ω	CLK CHX H
R200(1)	CHX2EX	D1	68Ω	-CSH 0 ANY VAL H
R162(1)	CHX2EX	D4	68Ω	-CSH 0 VAL WR H
R110(1)	CHX2EX	C5	68Ω	CSH 0 WD 0 VAL H
R105(1)	CHX2EX	C5	68Ω	CSH 0 WD 1 VAL H
R26(1)	CHX2EX	C4	68Ω	CSH 0 WD 2 VAL H
R106(1)	CHX2EX	C4	68Ω	CSH 0 WD 3 VAL H
R103(1)	CHX2EX	D1	68Ω	-CSH 1 ANY VAL H
R132(1)	CHX2EX	D4	68Ω	-CSH 1 VAL WR H
R108(1)	CHX2EX	B5	68Ω	CSH 1 WD 0 VAL H
R107(1)	CHX2EX	B5	68Ω	CSH 1 WD 1 VAL H
R22(1)	CHX2EX	B4	68Ω	CSH 1 WD 2 VAL H
R104(1)	CHX2EX	B4	68Ω	CSH 1 WD 3 VAL H
R27(1)	CHX1EX	D2	68Ω	CSH 1,3 VALID MATCH H
R188(1)	CHX2EX	D1	68Ω	-CSH 2 ANY VAL H

RESISTOR LOC(PIN)	SHOWN ON DRW#	REF	VALUE	TERMINATES SIGNAL
R165(1)	CHX2EX	D4	68Ω	-CSH 2 VAL WR H
R33(1)	CHX2EX	C3	68Ω	CSH 2 WD 0 VAL H
R34(1)	CHX2EX	C2	68Ω	CSH 2 WD 1 VAL H
R31(1)	CHX2EX	C2	68Ω	CSH 2 WD 2 VAL H
R21(1)	CHX2EX	C1	68Ω	CSH 2 WD 3 VAL H
R28(1)	CHX1EX	D2	68Ω	CSH 2,3 VALID MATCH H
R203(1)	CHX2EX	C1	68Ω	-CSH 3 ANY VAL H
R135(1)	CHX2EX	C4	68Ω	-CSH 3 VAL WR H
R25(1)	CHX2EX	B3	68Ω	CSH 3 WD 0 VAL H
R32(1)	CHX2EX	B2	68Ω	CSH 3 WD 1 VAL H
R29(1)	CHX2EX	B2	68Ω	CSH 3 WD 2 VAL H
R30(1)	CHX2EX	B1	68Ω	CSH 3 WD 3 VAL H
R40(1)	CHX4EX	D4	68Ω	CSH DIR 0 PAR ODD H
R37(1)	CHX4EX	C4	68Ω	CSH DIR 1 PAR ODD H
R122(1)	CHX1EX	C8	68Ω	CSH DIR 14 0 H
R67(1)	CHX1EX	C6	68Ω	CSH DIR 14 1 H
R52(1)	CHX1EX	C5	68Ω	CSH DIR 14 2 H
R49(1)	CHX1EX	C3	68Ω	CSH DIR 14 3 H
R130(1)	CHX1EX	C8	68Ω	CSH DIR 15 0 H
R68(1)	CHX1EX	C6	68Ω	CSH DIR 15 1 H
R63(1)	CHX1EX	C5	68Ω	CSH DIR 15 2 H
R46(1)	CHX1EX	C3	68Ω	CSH DIR 15 3 H
R128(1)	CHX1EX	C8	68Ω	CSH DIR 16 0 H
R69(1)	CHX1EX	C6	68Ω	CSH DIR 16 1 H
R54(1)	CHX1EX	C5	68Ω	CSH DIR 16 2 H
R47(1)	CHX1EX	C3	68Ω	CSH DIR 16 3 H
R156(1)	CHX1EX	C8	68Ω	CSH DIR 17 0 H
R71(1)	CHX1EX	C6	68Ω	CSH DIR 17 1 H
R56(1)	CHX1EX	C5	68Ω	CSH DIR 17 2 H
R50(1)	CHX1EX	C3	68Ω	CSH DIR 17 3 H
R129(1)	CHX1EX	C8	68Ω	CSH DIR 18 0 H
R70(1)	CHX1EX	C6	68Ω	CSH DIR 18 1 H
R55(1)	CHX1EX	C5	68Ω	CSH DIR 18 2 H
R48(1)	CHX1EX	C3	68Ω	CSH DIR 18 3 H
R151(1)	CHX1EX	B8	68Ω	CSH DIR 19 0 H
R65(1)	CHX1EX	B6	68Ω	CSH DIR 19 1 H
R58(1)	CHX1EX	B5	68Ω	CSH DIR 19 2 H
R116(1)	CHX1EX	B3	68Ω	CSH DIR 19 3 H
R38(1)	CHX4EX	C4	68Ω	CSH DIR 2 PAR ODD H
R126(1)	CHX1EX	B8	68Ω	CSH DIR 20 0 H

RESISTOR LOC(PIN)	SHOWN ON DRW#	REF	VALUE	TERMINATES SIGNAL
R66(1)	CHX1EX	B6	68Ω	CSH DIR 20 1 H
R118(1)	CHX1EX	B5	68Ω	CSH DIR 20 2 H
R119(1)	CHX1EX	B3	68Ω	CSH DIR 20 3 H
R125(1)	CHX1EX	B8	68Ω	CSH DIR 21 0 H
R64(1)	CHX1EX	B6	68Ω	CSH DIR 21 1 H
R57(1)	CHX1EX	B5	68Ω	CSH DIR 21 2 H
R120(1)	CHX1EX	B3	68Ω	CSH DIR 21 3 H
R124(1)	CHX1EX	B8	68Ω	CSH DIR 22 0 H
R59(1)	CHX1EX	B6	68Ω	CSH DIR 22 1 H
R45(1)	CHX1EX	B5	68Ω	CSH DIR 22 2 H
R41(1)	CHX1EX	B3	68Ω	CSH DIR 22 3 H
R121(1)	CHX1EX	B8	68Ω	CSH DIR 23 0 H
R60(1)	CHX1EX	B6	68Ω	CSH DIR 23 1 H
R117(1)	CHX1EX	B5	68Ω	CSH DIR 23 2 H
R44(1)	CHX1EX	B3	68Ω	CSH DIR 23 3 H
R87(1)	CHX1EX	B8	68Ω	CSH DIR 24 0 H
R81(1)	CHX1EX	B6	68Ω	CSH DIR 24 1 H
R82(1)	CHX1EX	B5	68Ω	CSH DIR 24 2 H
R74(1)	CHX1EX	B3	68Ω	CSH DIR 24 3 H
R88(1)	CHX1EX	B8	68Ω	CSH DIR 25 0 H
R79(1)	CHX1EX	B6	68Ω	CSH DIR 25 1 H
R77(1)	CHX1EX	B5	68Ω	CSH DIR 25 2 H
R73(1)	CHX1EX	B3	68Ω	CSH DIR 25 3 H
R85(1)	CHX1EX	A8	68Ω	CSH DIR 26 0 H
R83(1)	CHX1EX	A6	68Ω	CSH DIR 26 1 H
R75(1)	CHX1EX	A4	68Ω	CSH DIR 26 2 H
R76(1)	CHX1EX	A3	68Ω	CSH DIR 26 3 H
R72(1)	CHX4EX	A4	68Ω	CSH DIR 3 PAR ODD H
R86(1)	CHX4EX	D6	68Ω	CSH DIR PAR 0 H
R84(1)	CHX4EX	C6	68Ω	CSH DIR PAR 1 H
R80(1)	CHX4EX	B6	68Ω	CSH DIR PAR 2 H
R78(1)	CHX4EX	A6	68Ω	CSH DIR PAR 3 H
R15(1)	CHX3EX	B3	68Ω	-CSH REFILL RAM WR H
R114(1)	CHX3EX	B7	68Ω	CSH SEL LRU H
R115(1)	CHX3EX	C7	68Ω	-CSH SEL LRU H
R17(1)	CHX3EX	B5	68Ω	CSH USE ADR 2 H
R18(1)	CHX3EX	C4	68Ω	CSH USE ADR 3 H
R19(1)	CHX3EX	C4	68Ω	CSH USE ADR 4 H
R7(1)	CHX3EX	B4	68Ω	CSH USE HOLD H
R92(1)	CHX3EX	C6	68Ω	CSH USE IN 0 H

NOTE:

1. ALL TERMINATORS HAVE PIN TWO CONNECTED TO -2.0V AND ARE 5% 1/4WATT UNLESS OTHERWISE SPECIFIED
2. ENTRIES ARE SORTED BY SIGNAL NAME
3. % INDICATES OUTPUT OF DIP LOC AND
   () INDICATES PIN NUMBER

"THIS DRAWING AND SPECIFICATIONS, HEREIN, ARE THE PROPERTY OF DIGITAL EQUIPMENT CORPORATION AND SHALL NOT BE REPRODUCED OR COPIED OR USED IN WHOLE OR IN PART AS THE BASIS FOR THE MANUFACTURE OR SALE OF ITEMS WITHOUT WRITTEN PERMISSION. COPYRIGHT © 1975, DIGITAL EQUIPMENT CORPORATION"

REVISIONS

CHK	CHANGE NO.	REV
–	M8515-00001	A

E. Romero 5-30-75
P. GUGLIELMI
5-30-75

digital

DRN. G. Smith 07-APR-75 | DATE | ENG. P. Guglielmi 4/9/75 | DATE
CHK. Bob Allen 7/2/75 | DATE | BOARD LOCATION: 4AE28 SHEET 1 OF 2

M8515[4,427] 07-APR-75 14:06 | NEXT HIGHER ASSEMBLY:
FIRST USED ON OPTION/MODEL: KL10 | B-DD-M8515-0

TITLE: CACHE EXTENSION TERMINATORS

SIZE	CODE	NUMBER	REV.
D	CS	M8515-0-RES	A

MR 1

52

RESISTOR LOC(PIN)	SHOWN ON DRW#	REF	VALUE	TERMINATES SIGNAL
R89(1)	CHX3EX	B6	68Ω	CSH USE IN 1 H
R103(1)	CHX3EX	C3	68Ω	CSH USE IN 2 H
R24(1)	CHX3EX	C2	68Ω	CSH USE IN 3 H
R90(1)	CHX3EX	C1	68Ω	CSH USE IN 4 H
R39(1)	CHX3EX	D7	68Ω	CSH USE WR EN H
R109(1)	CHX2EX	D3	68Ω	CSH VAL SEL ALL H
R163(1)	CHX2EX	D2	68Ω	-CSH VAL WD 0 SEL H
R134(1)	CHX2EX	D2	68Ω	-CSH VAL WD 1 SEL H
R164(1)	CHX2EX	D2	68Ω	-CSH VAL WD 2 SEL H
R136(1)	CHX2EX	C2	68Ω	-CSH VAL WD 3 SEL H
R195(1)	CHX3EX	C2	68Ω	CSH VAL WR DATA H
R160(1)	CHX3EX	C1	68Ω	CSH VAL WR DATA A H
R131(1)	CHX3EX	C1	68Ω	CSH VAL WR DATA B H
R190(1)	CHX2EX	D4	68Ω	-CSH VAL WR PULSE H
R186(1)	CHX1EX	A8	68Ω	FORCE NO MATCH H
R199(1)	CHX1EX	A7	68Ω	FORCE VALID MATCH 0 H
R184(1)	CHX1EX	A6	68Ω	FORCE VALID MATCH 1 H
R185(1)	CHX1EX	A4	68Ω	FORCE VALID MATCH 2 H
R201(1)	CHX1EX	A3	68Ω	FORCE VALID MATCH 3 H
R173(1)	CHX1EX	D8	68Ω	PT 14 B H
R172(1)	CHX1EX	D8	68Ω	PT 15 B H
R171(1)	CHX1EX	D8	68Ω	PT 16 B H
R174(1)	CHX1EX	D8	68Ω	PT 17 B H
R177(1)	CHX1EX	D8	68Ω	PT 18 B H
R176(1)	CHX1EX	D8	68Ω	PT 19 B H
R175(1)	CHX1EX	D8	68Ω	PT 20 B H
R178(1)	CHX1EX	D8	68Ω	PT 21 B H
R181(1)	CHX1EX	D8	68Ω	PT 22 B H
R180(1)	CHX1EX	D8	68Ω	PT 23 B H
R179(1)	CHX1EX	D8	68Ω	PT 24 B H
R182(1)	CHX1EX	C8	68Ω	PT 25 B H
R187(1)	CHX1EX	C8	68Ω	PT 26 B H
R12(1)	CHX3EX	C5	68Ω	USE TBL IN 2 H
R13(1)	CHX3EX	C5	68Ω	USE TBL IN 3 H
R16(1)	CHX3EX	C5	68Ω	USE TBL IN 4 H
R191(1)	CHX3EX	D5	68Ω	VMA 27 G H
R192(1)	CHX3EX	D5	68Ω	VMA 28 G H
R193(1)	CHX3EX	C5	68Ω	VMA 29 G H
R194(1)	CHX3EX	D3	68Ω	VMA 30 G H
R197(1)	CHX3EX	D3	68Ω	VMA 31 G H

RESISTOR LOC(PIN)	SHOWN ON DRW#	REF	VALUE	TERMINATES SIGNAL
R198(1)	CHX3EX	C3	68Ω	VMA 32 G H
R196(1)	CHX3EX	D2	68Ω	VMA 33 G H
R98(1)	CHX3EX	D7	68Ω	-WR USE BITS A H
R96(1)	CHX3EX	C7	68Ω	-WR USE BITS B H

NOTE:

1. ALL TERMINATORS HAVE PIN TWO CONNECTED TO -2.0V AND ARE 5% 1/4WATT UNLESS OTHERWISE SPECIFIED
2. ENTRIES ARE SORTED BY SIGNAL NAME
3. % INDICATES OUTPUT OF DIP LOC AND
   () INDICATES PIN NUMBER

"THIS DRAWING AND SPECIFICATIONS, HEREIN, ARE THE PROPERTY OF DIGITAL EQUIPMENT CORPORATION AND SHALL NOT BE REPRODUCED OR COPIED OR USED IN WHOLE OR IN PART AS THE BASIS FOR THE MANUFACTURE OR SALE OF ITEMS WITHOUT WRITTEN PERMISSION.
COPYRIGHT © 1975, DIGITAL EQUIPMENT CORPORATION"

REVISIONS		
CHK	CHANGE NO.	REV
-	M8515-00001	A
	P. GUGLIELMI	

digital

DRN. P. Smith DATE 07-APR-75 ENG. P. Guglielmi DATE 4/7/75
CHK'D DATE 4/10/75 BOARD LOCATION: 4A F28
M8515[4,427] 07-APR-75 14:09 SHEET 2 OF 2
FIRST USED ON OPTION/MODEL: KL10 NEXT HIGHER ASSEMBLY: B-DD-M8515-0

TITLE: CACHE EXTENSION TERMINATORS

SIZE	CODE	NUMBER	REV
D	CS	M8515-0-RES	A

53

DRAWING NUMBER	PAGE	PART NO.	DESCRIPTION				REVISIONS
			FILE: ORIGINAL LAYOUT				
			ECO NUMBER		1	2	
			MODULE REVISION	A	A	A	
D-UA-M8549-YF-0	4		CACHE EXTENSION SUBSTITUTE	-	A	B	
K-PL-M8549-YF-DBP	1		PARTS LIST	-	A	B	
D-CS-M8549-YF-CHXS	1		CACHE EXTENSION SUBSTITUTE	-	-	-	
D-MD-5011495-0-0	5		DRILL & ETCH DRAWING	-	A	A	
		5011495	ETCH CIRCUIT BOARD	A	A	A	
K-PC-M8549-YF-DBC	-		P.C. DESIGN DATA BASE	A	B	C	
POO-M8549-YF	-		PROCESS SHEET (REFERENCE ONLY)				

NOTES:ECO 1 DOCUMENTATION CHANGE ONLY

"THIS DRAWING AND SPECIFICATIONS, HEREIN, ARE THE PROPERTY OF DIGITAL EQUIPMENT CORPORATION AND SHALL NOT BE REPRODUCED OR COPIED OR USED IN WHOLE OR IN PART AS THE BASIS FOR THE MANUFACTURE OR SALE OF ITEMS WITHOUT WRITTEN PERMISSION. COPYRIGHT © 1980, DIGITAL EQUIPMENT CORPORATION"

REVISIONS		
CHK	CHANGE NO.	REV
MP	MP002	B
		A0
T. BOWEN		

DSK:8549FD.T2P[4,550] 13-FEB-80 08:50
FIRST USED ON OPTION/MODEL: KL10/20

DRN. T. Bowen DATE 13-FEB-80 ENG. DATE
CHK'D. M. Russell DATE 5 MAR 80 BOARD LOCATION:
SHEET 1 OF 1
NEXT HIGHER ASSEMBLY: NONE

TITLE: CACHE EXTENSION SUBSTITUTE BOARD

SIZE	CODE	NUMBER	REV.
D	DD	M8549-YF	B

54

THIS DRAWING AND SPECIFICATIONS, HEREIN, ARE THE PROPERTY OF DIGITAL EQUIPMENT CORPORATION AND SHALL NOT BE REPRODUCED OR COPIED OR USED IN WHOLE OR IN PART AS THE BASIS FOR THE MANUFACTURE OR SALE OF ITEMS WITHOUT WRITTEN PERMISSION.
COPYRIGHT © 1978 DIGITAL EQUIPMENT CORPORATION

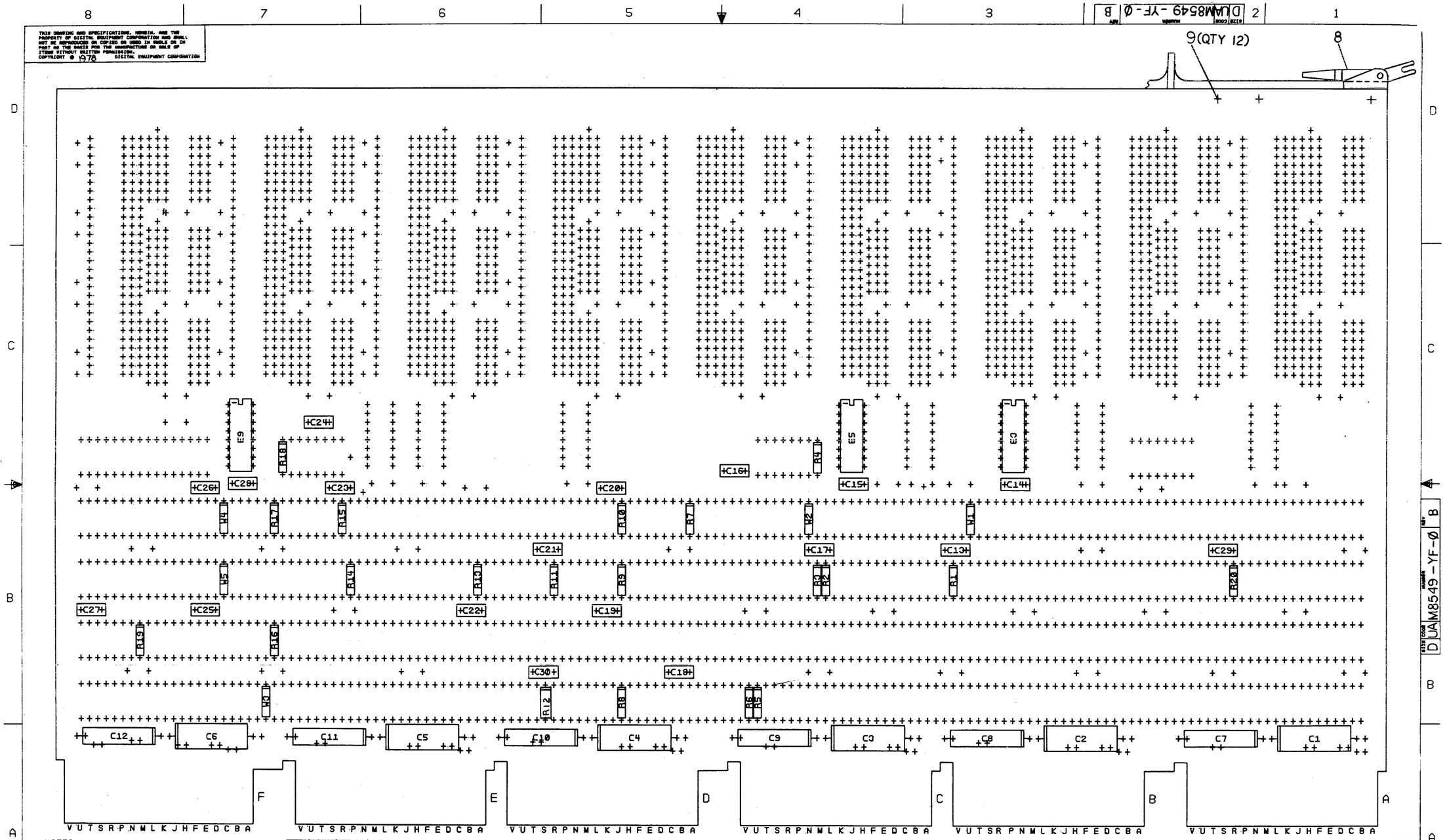

NOTES:

CHK	CHANGE NO	REV
	M8549-YF-1	A
	T. BOWEN	
	YF-MR002	B
	T. BOWEN	

SIGNATURES	DATE
DRN	18 Dec 78
CHK	18 Dec 78
ENG.	22 Nov 78
PROJ. ENG	22 Nov 78
PROD.	22 Nov 78

digital

TITLE CACHE EXTENSION SUBSTITUTE BD.

SCALE 2/1	SIZE	CODE	NUMBER	REV
SHT. 1 OF 4	D	UA	M8549-YF-Ø	B
ETCH REV A FIRST USED ON KL10				

DUAM8549-YF-Ø B

MR

1 MS#_____

55

THE INFORMATION DISCLOSED HEREIN WAS DESIGNED BY DIGITAL EQUIPMENT CORPORATION. IT MAY NOT BE REPRODUCED OR COPIED OR USED IN WHOLE OR IN PART AS THE BASIS FOR THE MANUFACTURE OR SALE BY ANYONE WITHOUT WRITTEN PERMISSION
© 1970 DIGITAL EQUIPMENT CORPORATION

LAYER 1

MS30061 M8549 5011495A

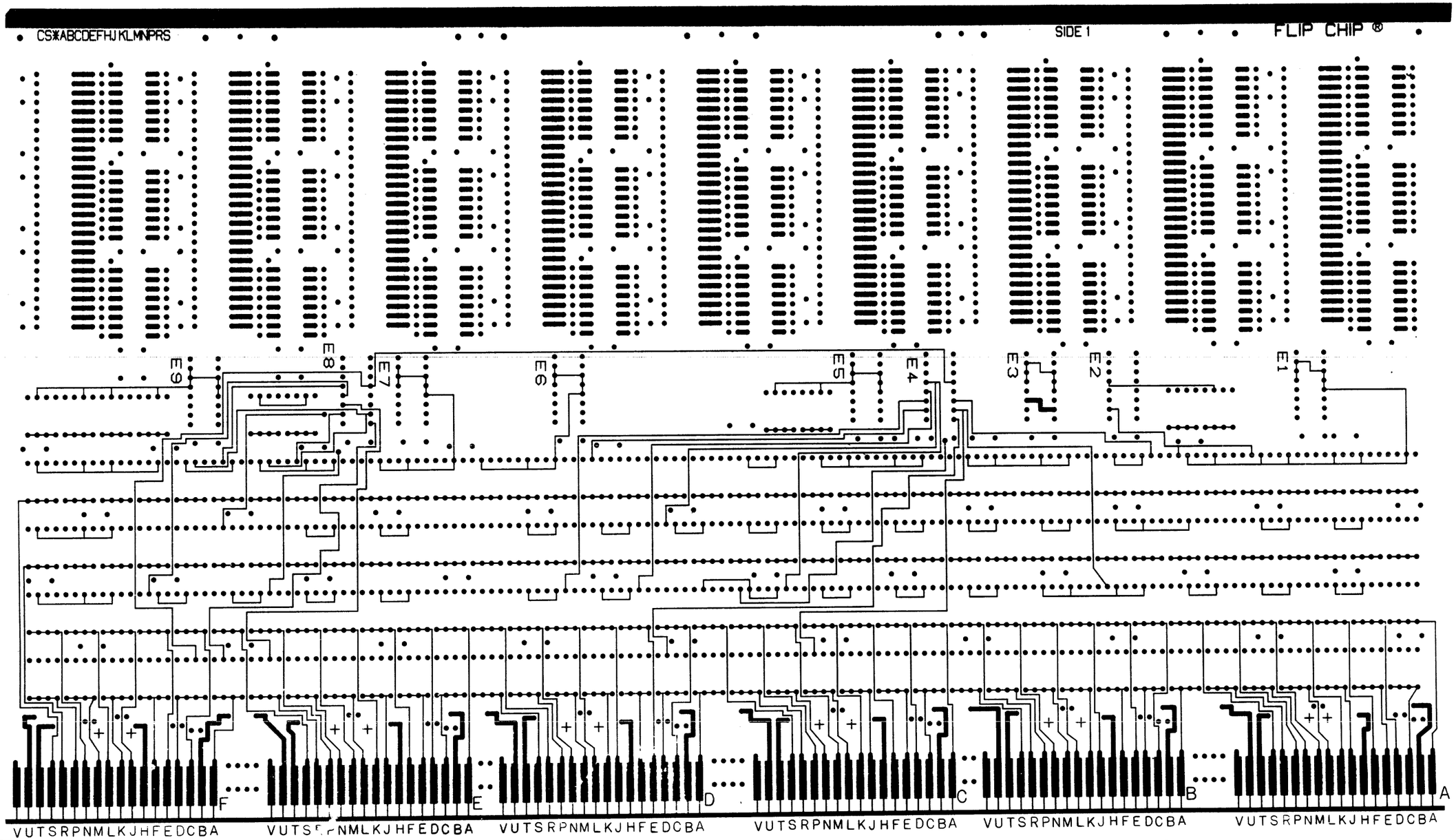

LAYER 1

REVISIONS		
CHK	CHANGE NO	REV

TITLE	SIZE	CODE	NUMBER	REV.
CACHE EXTENSION SUBSTITUTE BD.	D	UA	M8549 - YF - Ø	B
SCALE	SHEET 2 OF 4	DIST.		

D UA M8549 - YF - Ø B

DRAWINGS AND SPECIFICATIONS, HEREIN, ARE THE PROPERTY OF DIGITAL EQUIPMENT CORPORATION AND SHALL NOT BE REPRODUCED OR COPIED OR USED IN WHOLE OR IN PART AS THE BASIS FOR THE MANUFACTURE OR SALE OF ITEMS WITHOUT WRITTEN PERMISSION
© 1975 DIGITAL EQUIPMENT CORPORATION

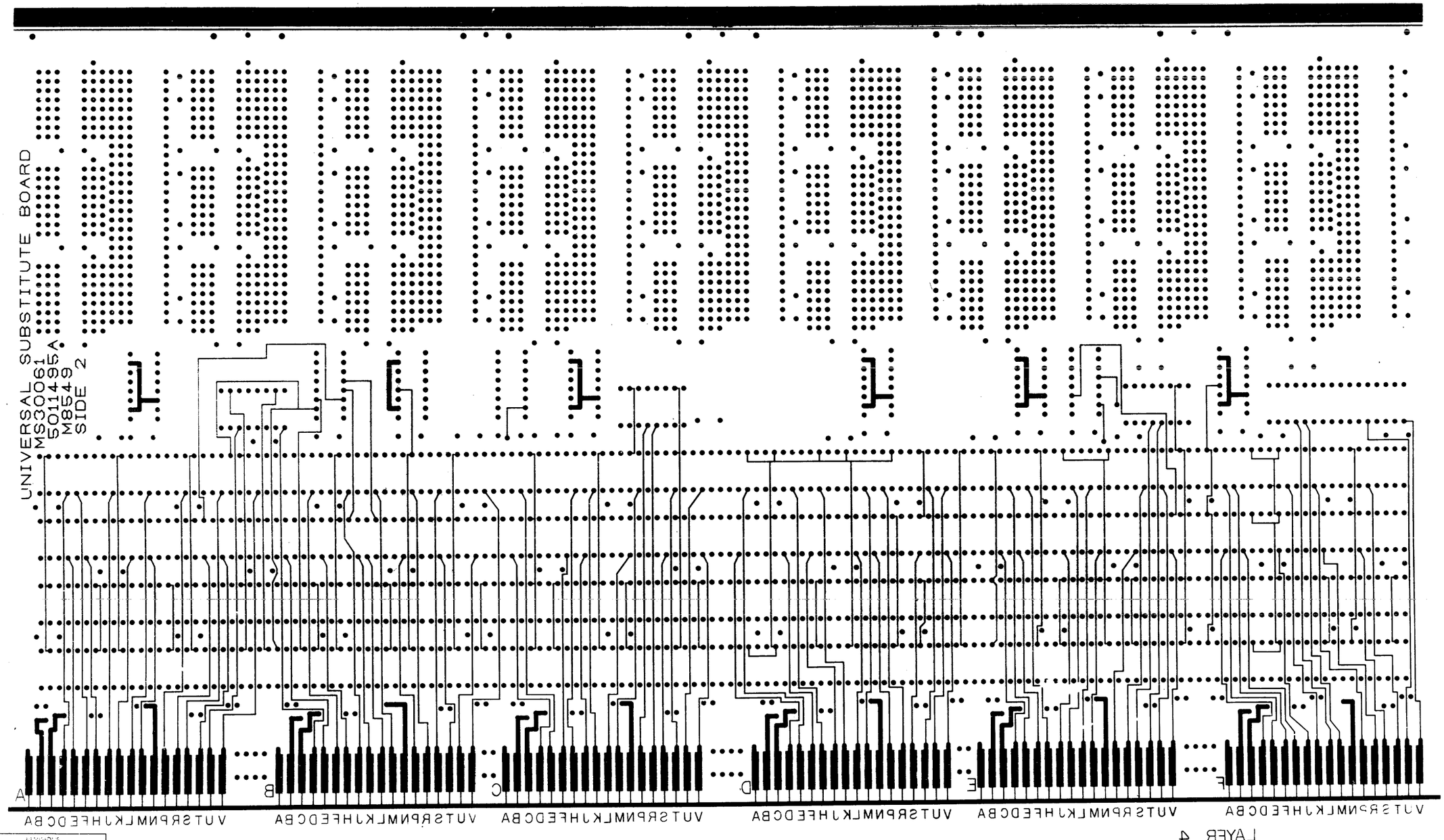

REVISIONS		
LTR	CHANGE NO.	REV

TITLE	SIZE	CODE	NUMBER	REV.
CACHE EXTENSION SUBSTITUTE BD.	D	UA	M8549 - YF - Ø	B
SCALE —	SHEET 3 OF 4	DIST.		

MR

DIGITAL EQUIPMENT CORPORATION AND ... BE REPRODUCED OR USED IN WHOLE OR IN PART ... MANUFACTURE OR SALE ... WITHOUT THE PERMISSION ... DIGITAL EQUIPMENT CORPORATION

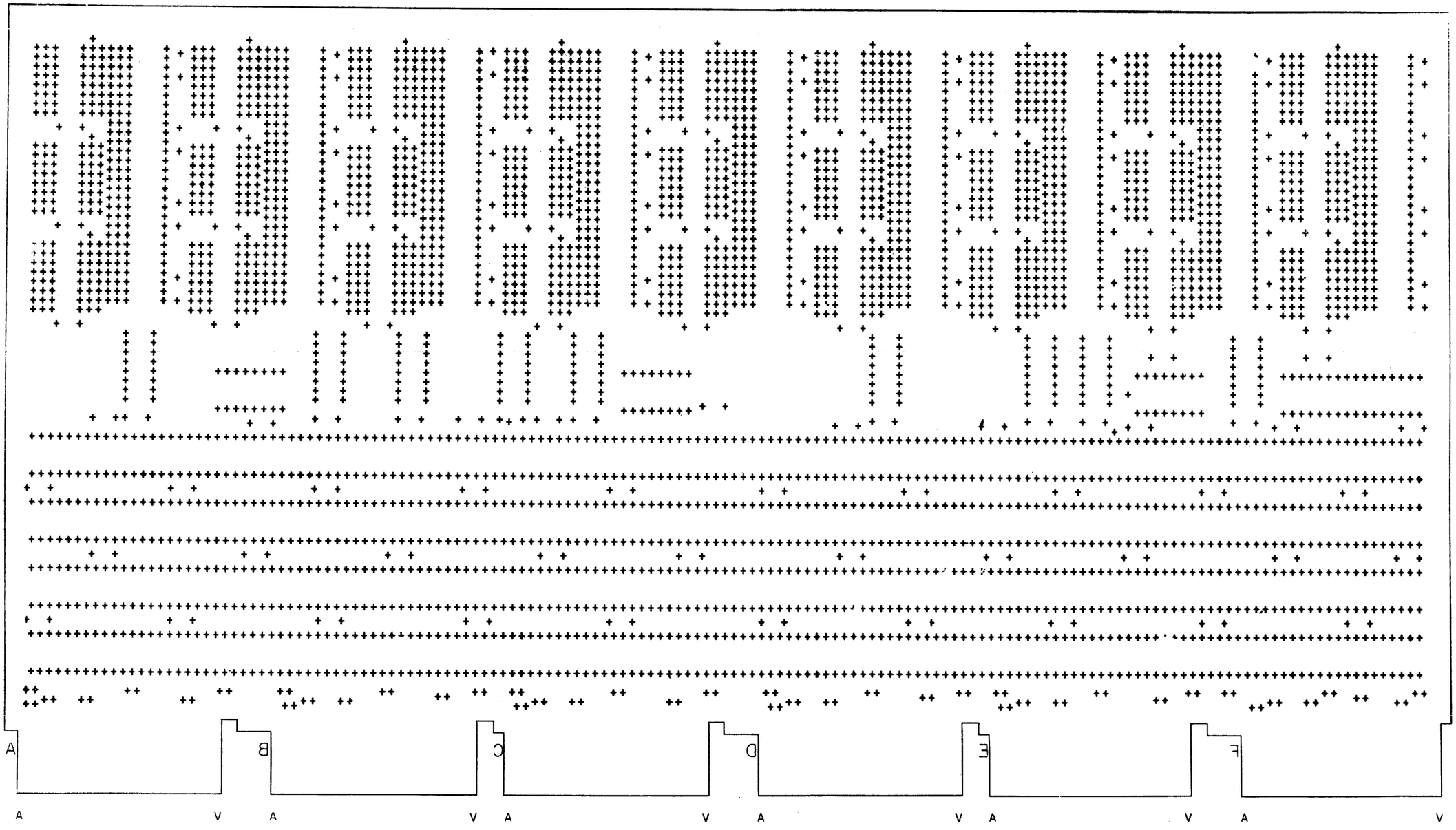

CHG	CHANGE NO	REV

TITLE	SIZE	CODE	NUMBER	REV
CACHE EXTENSION SUBSTITUTE BD.	D	UA	M8549-YF-0	B

SCALE — SHEET 4 OF 4 — DIST.

MR

58

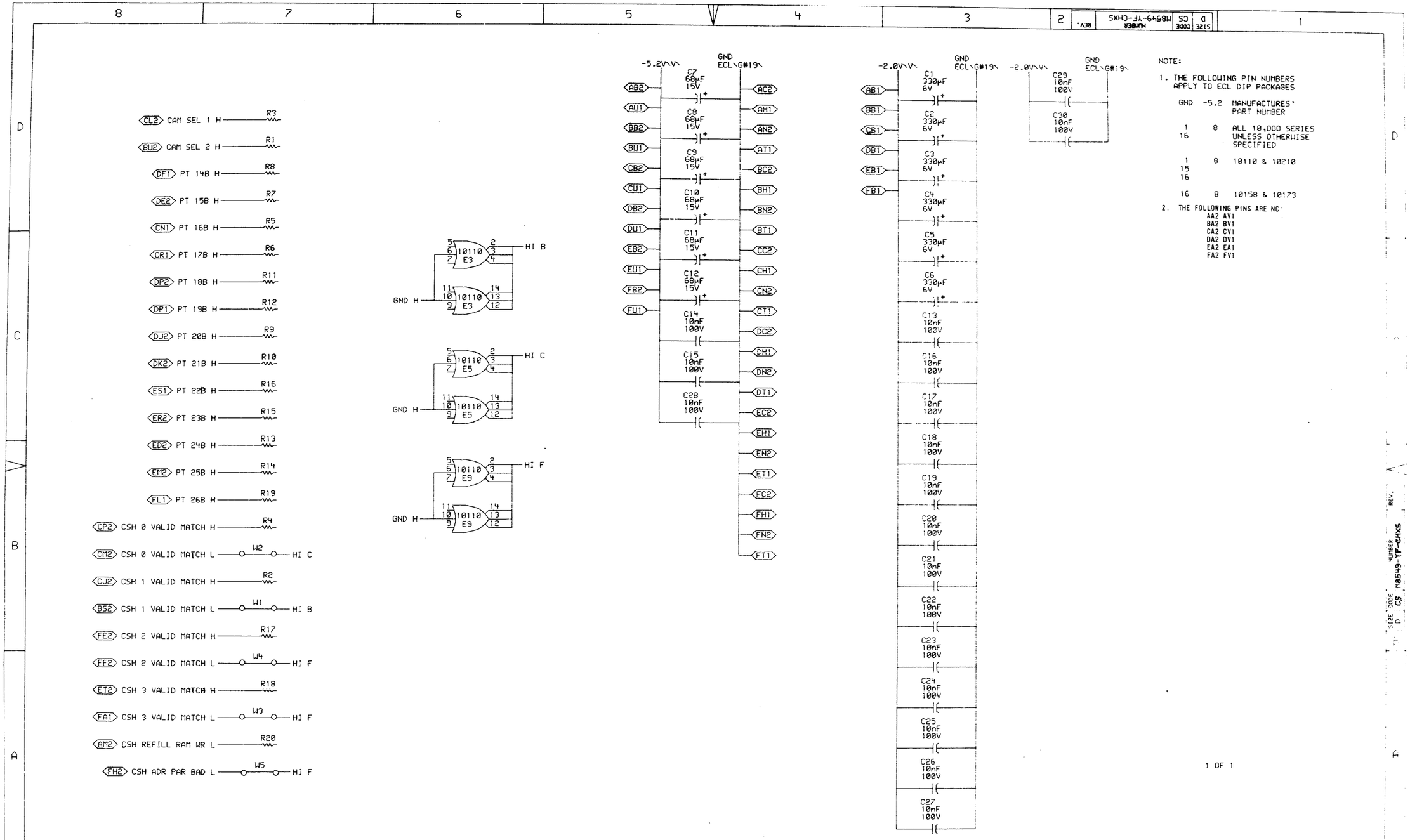

NOTE:

1. THE FOLLOWING PIN NUMBERS APPLY TO ECL DIP PACKAGES

GND	-5.2	MANUFACTURES' PART NUMBER
1 16	8	ALL 10,000 SERIES UNLESS OTHERWISE SPECIFIED
1 15 16	8	10110 & 10210
16	8	10158 & 10173

2. THE FOLLOWING PINS ARE NC
   AA2 AV1
   BA2 BV1
   CA2 CV1
   DA2 DV1
   EA2 EA1
   FA2 FV1

1 OF 1

"THIS DRAWING AND SPECIFICATIONS, HEREIN, ARE THE PROPERTY OF DIGITAL EQUIPMENT CORPORATION AND SHALL NOT BE REPRODUCED OR COPIED OR USED IN WHOLE OR IN PART AS THE BASIS FOR THE MANUFACTURE OR SALE OF ITEMS WITHOUT WRITTEN PERMISSION.
COPYRIGHT © 1975, DIGITAL EQUIPMENT CORPORATION"

REVISIONS		
CHK	CHANGE NO.	REV

digital

DRN. DATE ENG. DATE
CHK'D. DATE BOARD LOCATION:
SHEET 1 OF 1
CHXSI[4,121] 20-FEB-75 23:16 NEXT HIGHER ASSEMBLY:
FIRST USED ON OPTION/MODEL: KL10 B-DD-M8549-YF

TITLE: CACHE EXTENSION SUBSTITUTE

SIZE	CODE	NUMBER	REV.
D	CS	M8549-YF-CHXS	

REVISION CONTROL SHEET

CUSTOMER PRINT SET | MFG SET

DRAWING NO	NO OF SHT	DESCRIPTION	OPTION NO/FILE DATE	REVISIONS				
	-	MODULE REVISION		A	B	C	D	D
D-UA-M8516-Ø-Ø	4	E + C BUS TRANSLATOR		-	A	B	C	CI
D-CS-M8516-Ø-TRØ1	1	E + C BUS TRANSLATOR		-	A	B	C	D
D-CS-M8516-Ø-TRØ2	1	E + C BUS TRANSLATOR		-	A	B	C	C
D-CS-M8516-Ø-TRØ3	1	E + C BUS TRANSLATOR		-	A	B	C	D
D-CS-M8516-Ø-TRØ4	1	E + C BUS TRANSLATOR		-	A	B	C	D
D-CS-M8516-Ø-TRØ5	1	E + C BUS TRANSLATOR		-	A	B	C	D
D-CS-M8516-Ø-TRØ6	1	E + C BUS TRANSLATOR		-	A	B	B	C
D-CS-M8516-Ø-RES	2	E + C BUS TRANSLATOR		-	A	B	C	D
K-CO-M8516-Ø-4	1	E + C BUS TRANSLATOR (CALDEC DATA BASE)		C	C	C	C	C
D-AH-M8516-Ø-5	4	E + C BUS TRANSLATOR		B	B	B	B	B
B-MH-M8516-Ø-6	1	MODULE ECO HISTORY		-	A	B	C	D
5010520	-	ETCH CIRCUIT BOARD		C	C	C	C	C
P00-M8516-00		PROCESS SHEET (REF ONLY)		-	-	-	-	-

REWORK VERSION

SEE SHEET 3 FOR NEW LAYOUT

CUSTOMER PRINT SET CODES

X = PRINT OF DOCUMENT INCLUDED IN PRINT SET
C = INCLUDES ALL PRINTS INDICATED ON DOCUMENT
S = CONFIDENTIAL AUTHORIZED SIGNATURE REQUIRED

ECO NO	ORIG	[illegible]	[illegible]	[illegible]	CCCC4

TITLE		SIZE	CODE	NUMBER	REV
E + C BUS TRANSLATOR	SHEET 2 OF 3	B	DD	M8516-Ø	D

MR

60

"THIS DRAWING AND SPECIFICATIONS, HEREIN, ARE THE PROPERTY OF DIGITAL EQUIPMENT CORPORATION AND SHALL NOT BE REPRODUCED OR COPIED OR USED IN WHOLE OR IN PART AS THE BASIS FOR THE MANUFACTURE OR SALE OF ITEMS WITHOUT WRITTEN PERMISSION. COPYRIGHT © 1974, DIGITAL EQUIPMENT CORPORATION"

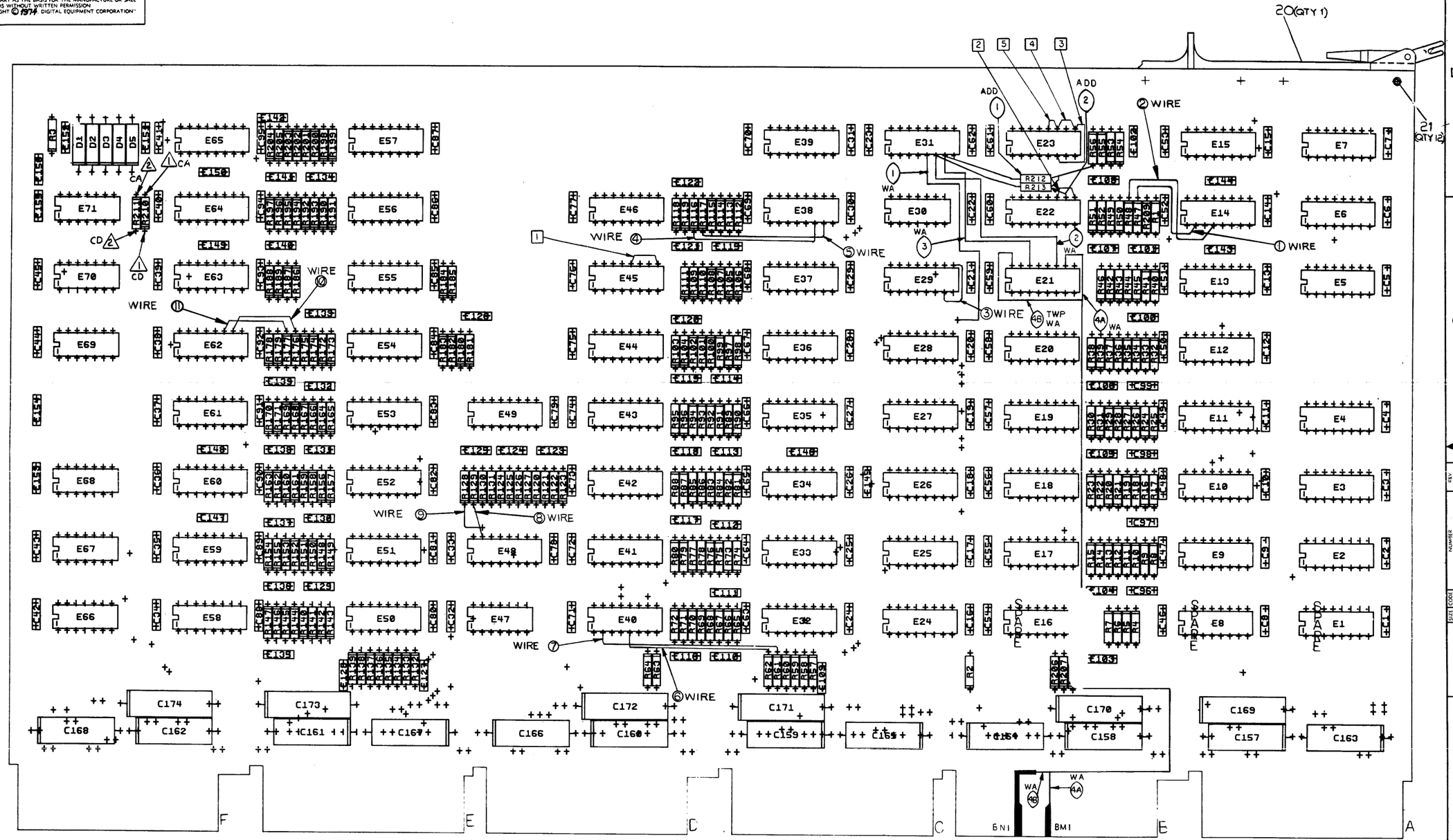

REVISIONS		
CHK	CHANGE NO.	REV.

TITLE	SIZE	CODE	NUMBER	REV.
E+C BUS TRANSLATOR	D	UA	M8516-0-0	C1
SCALE 2/1	SHEET 2 OF 5	DIST.		

61

REVISION CONTROL SHEET

CUSTOMER PRINT SET	MFG SET	DRAWING NO	NO OF SHT	DESCRIPTION	OPTION NO/FILE DATE	REVISIONS
		———	-	MODULE REVISION		E
		D-UA-M8516-Ø-Ø	4	E + C BUS TRANSLATOR		D
		D-CS-M8516-Ø-TRØ1	1	E + C BUS TRANSLATOR		D
		D-CS-M8516-Ø-TRØ2	1	E + C BUS TRANSLATOR		C
		D-CS-M8516-Ø-TRØ3	1	E + C BUS TRANSLATOR		D
		D-CS-M8516-Ø-TRØ4	1	E + C BUS TRANSLATOR		D
		D-CS-M8516-Ø-TRØ5	1	E + C BUS TRANSLATOR		D
		D-CS-M8516-Ø-TRØ6	1	E + C BUS TRANSLATOR		C
		D-CS-M8516-Ø-RES	2	E + C BUS TRANSLATOR		D
		K-CO-M8516-Ø-4	1	E + C BUS TRANSLATOR (CALDEC DATA BASE)		D
		D-AH-M8516-Ø-5	4	E + C BUS TRANSLATOR		C
		B-MH-M8516-Ø-6	1	MODULE ECO HISTORY		D
		5010520	-	ETCH CIRCUIT BOARD		D
		P00-M8516-00		PROCESS SHEET (REF ONLY)		

RELAYOUT VERSION

CUSTOMER PRINT SET CODES
X = PRINT OF DOCUMENT INCLUDED IN PRINT SET
C = INCLUDES ALL PRINTS INDICATED ON DOCUMENT
S = CONFIDENTIAL AUTHORIZED SIGNATURE REQUIRED

ECO NO 00004

TITLE		SIZE	CODE	NUMBER	REV
E + C BUS TRANSLATOR	SHEET 3 OF 3	B	DD	M8516-Ø	D

MR

THIS DRAWING AND SPECIFICATIONS, HEREIN, ARE THE PROPERTY OF DIGITAL EQUIPMENT CORPORATION AND SHALL NOT BE REPRODUCED OR COPIED OR USED IN WHOLE OR IN PART AS THE BASIS FOR THE MANUFACTURE OR SALE OF ITEMS WITHOUT WRITTEN PERMISSION.
COPYRIGHT © 1976 DIGITAL EQUIPMENT CORPORATION

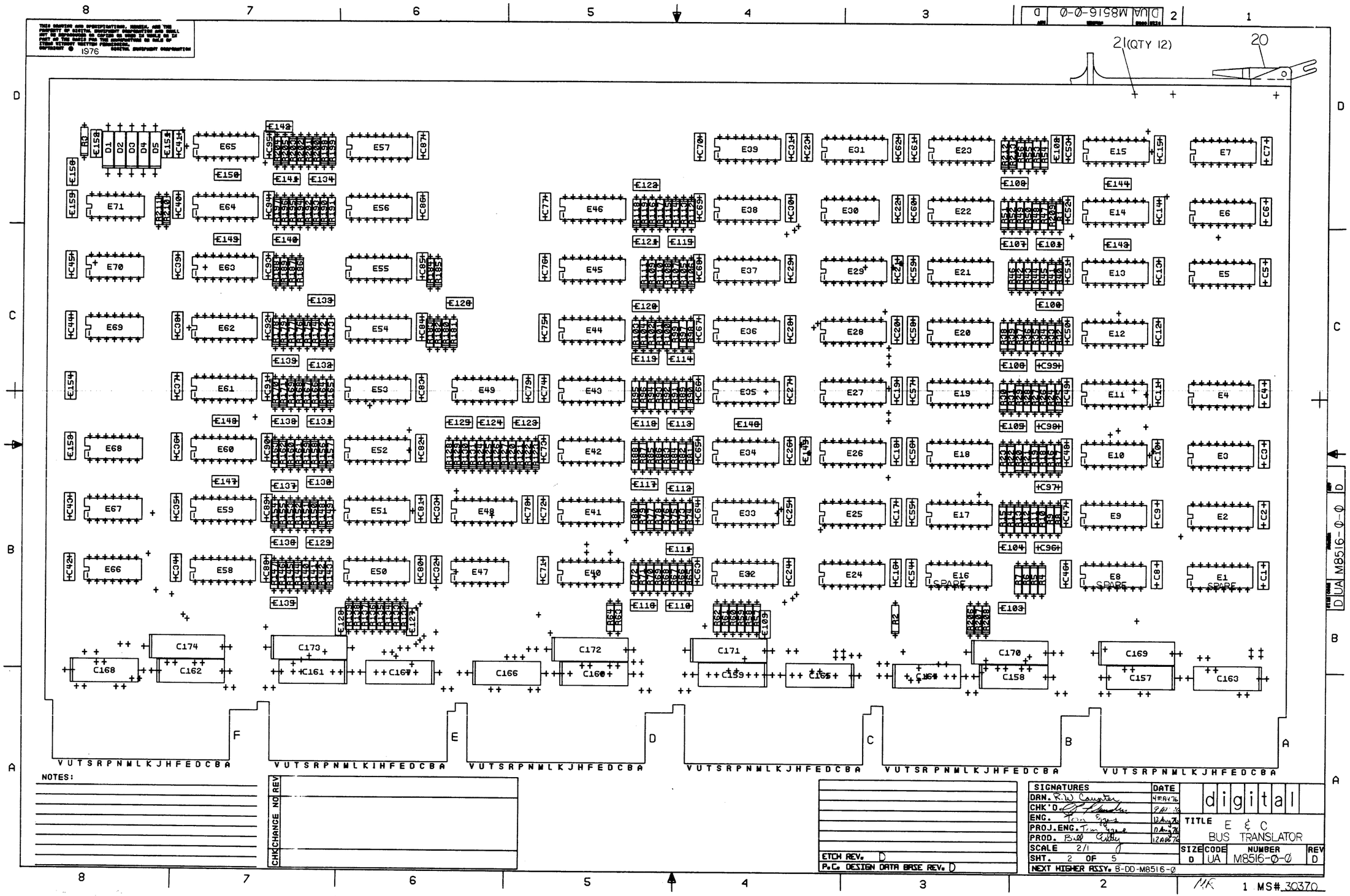

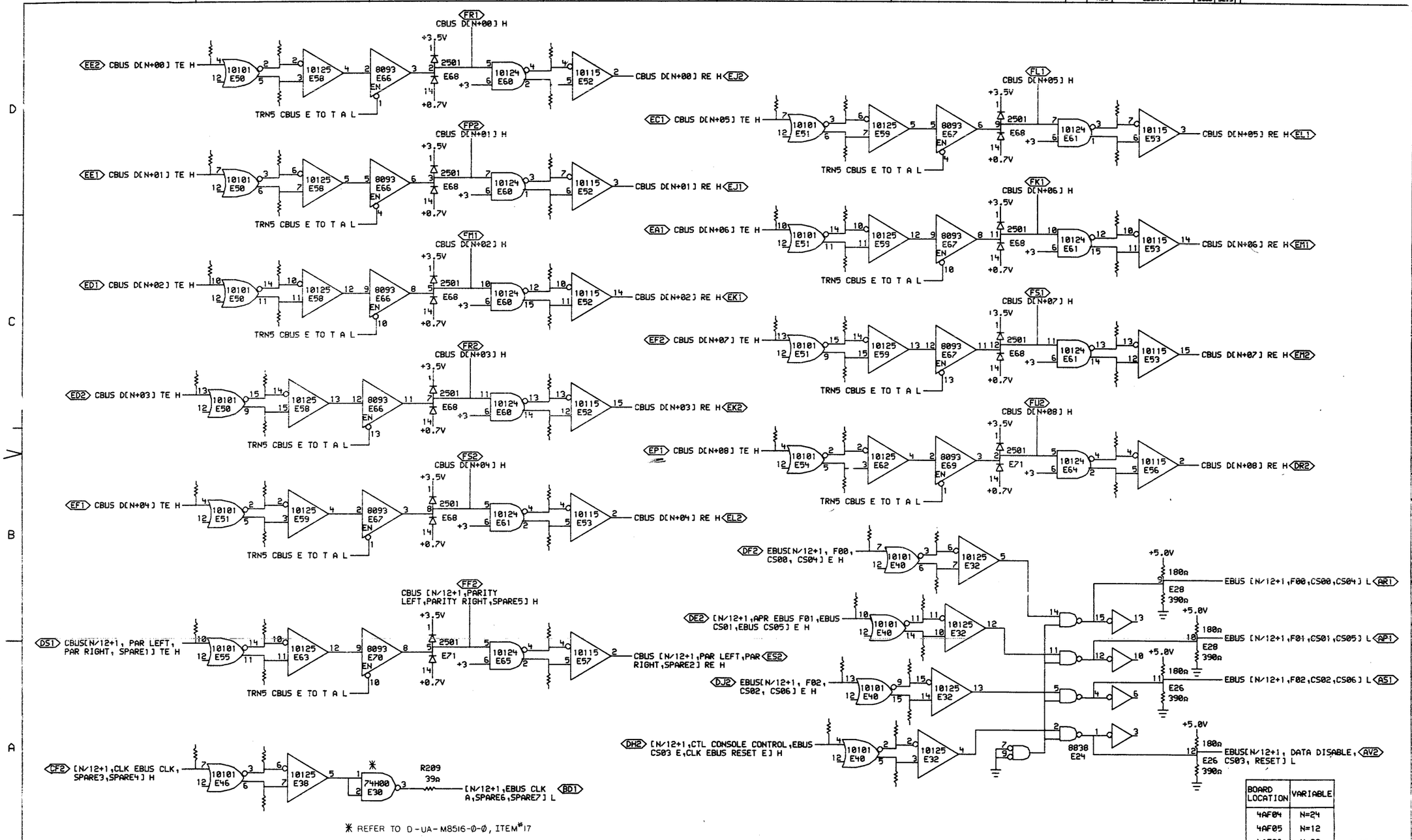

BOARD LOCATION	VARIABLE
4AF04	N=24
4AF05	N=12
4AF06	N=00

1 OF 6

"THIS DRAWING AND SPECIFICATIONS, HEREIN, ARE THE PROPERTY OF DIGITAL EQUIPMENT CORPORATION AND SHALL NOT BE REPRODUCED OR COPIED OR USED IN WHOLE OR IN PART AS THE BASIS FOR THE MANUFACTURE OR SALE OF ITEMS WITHOUT WRITTEN PERMISSION. COPYRIGHT © 1976, DIGITAL EQUIPMENT CORPORATION"

REVISIONS		
CHK	CHANGE NO.	REV
	00004	D
REVISED & REDRAWN.		

digital

DRN. DATE 20-JUL-76 ENG. DATE 20JUL76 CHK'D DATE 20JUL76

TRN1EX.DRW[4,121] 18-JUL-76 17:16

FIRST USED ON OPTION/MODEL: KL10

BOARD LOCATION: SHEET 1 OF 1

NEXT HIGHER ASSEMBLY: B-DD-M8516-0

TITLE: E & C BUS TRANSLATOR

SIZE	CODE	NUMBER	REV.
D	CS	M8516-0-TR01	D

MR

64

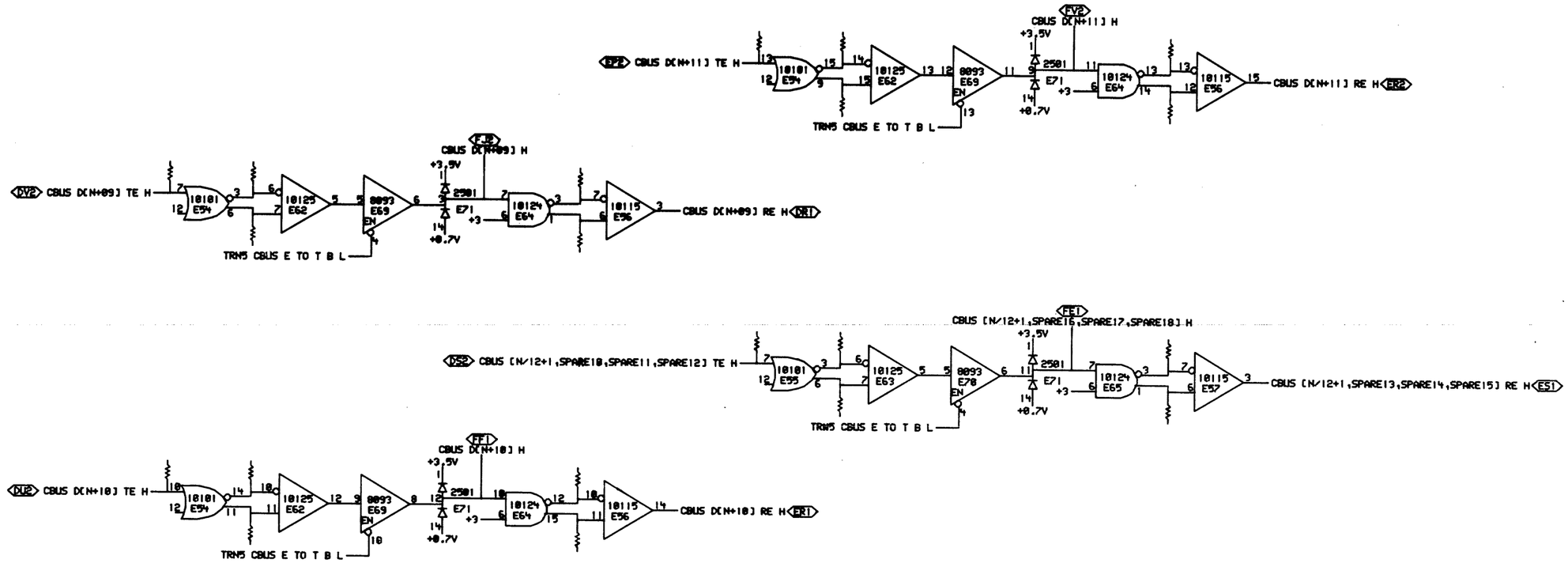

BOARD LOCATION	VARIABLE
4AF04	N=24
4AF05	N=12
4AF06	N=00

2 OF 6

"THIS DRAWING AND SPECIFICATIONS, HEREIN, ARE THE PROPERTY OF DIGITAL EQUIPMENT CORPORATION AND SHALL NOT BE REPRODUCED OR COPIED OR USED IN WHOLE OR IN PART AS THE BASIS FOR THE MANUFACTURE OR SALE OF ITEMS WITHOUT WRITTEN PERMISSION. COPYRIGHT © 1975, DIGITAL EQUIPMENT CORPORATION"

REVISIONS		
CHK	CHANGE NO.	REV
-	M8516-00005	C

digital

DRN. J. Gormley DATE 22-SEP-75 ENG. William M. Tai DATE 9/23/75
CHK'D DATE 22-Sep-75 BOARD LOCATION: SHEET 1 OF 1
TRNEXC4.121] 20-SEP-75 00:09 NEXT HIGHER ASSEMBLY: B-DD-M8516-0
FIRST USED ON OPTION/MODEL: KL10

TITLE: E & C BUS TRANSLATOR

SIZE	CODE	NUMBER	REV.
D	CS	M8516-0-TR02	C

MR 1

M8517 { SLOT 14 — N=12 & N=30
SLOT 15 — N=06 & N=24
SLOT 16 N=00 & N=18

M8516 { SLOT 4 — 24 → 35
SLOT 5 — 12 → 23
SLOT 6 — 00 → 11

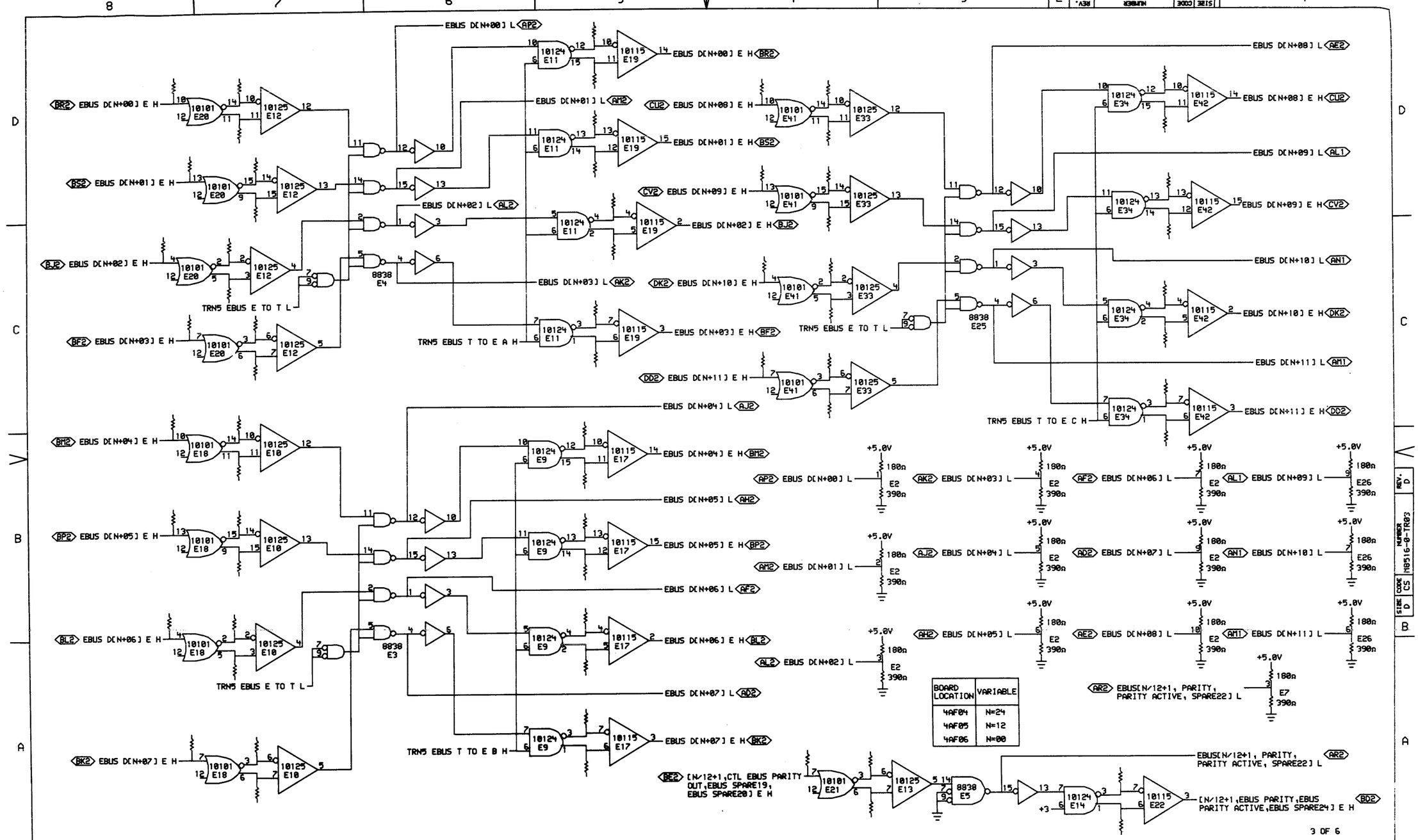

BOARD LOCATION	VARIABLE
4AF04	N=24
4AF05	N=12
4AF06	N=00

"THIS DRAWING A D SPECIFICATIONS, HEREIN, A-E THE PROPERTY OF DIGITAL EQUIPMENT CORPORATION AND SHALL NOT BE REPRODUCED OR COPIED OR USED IN WHOLE OR IN PART AS THE BASIS FOR THE MANUFACTURE OR SALE OF ITEMS WITHOUT WRITTEN PERMISSION.
COPYRIGHT © 1976, DIGITAL EQUIPMENT CORPORATION"

REVISIONS		
CHK	CHANGE NO.	REV
	00004	D
	REVISED & REDRAWN	

digital

DRN. — DATE 19-JUL-76
CHK. — DATE 20-JUL-76
ENGT — DATE 20-JUL-76
BOARD LOCATION:
SHEET 1 OF 1
TRN3EX.DRW[4,121] 18-JUL-76 17:14
NEXT HIGHER ASSEMBLY: B-DD-M8516-0
FIRST USED ON OPTION/MODEL: KL10

TITLE: E & C BUS TRANSLATOR

SIZE	CODE	NUM ER	REV.
D	CS	M8516-0-TR03	D

66

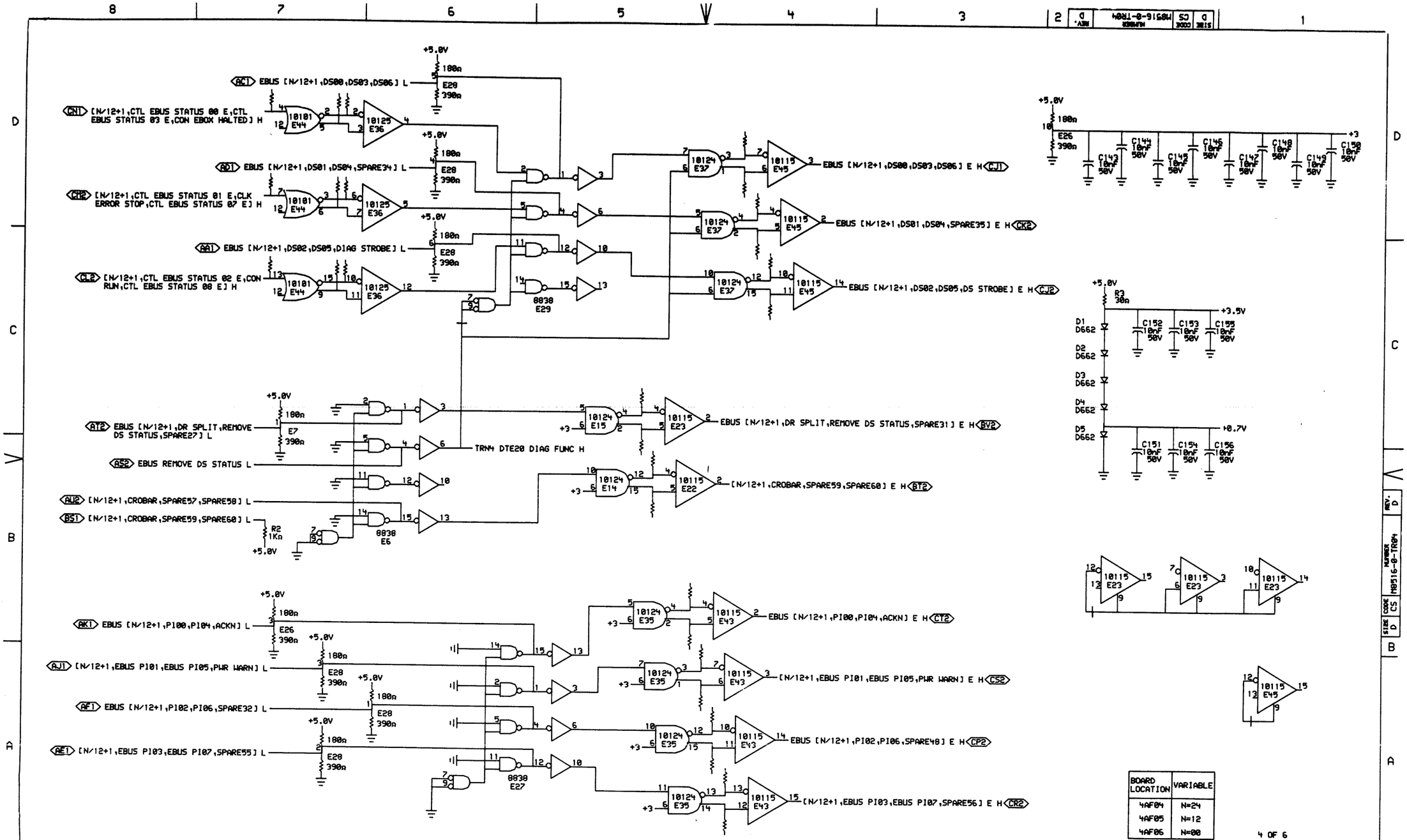

BOARD LOCATION	VARIABLE
4AF04	N=24
4AF05	N=12
4AF06	N=00

"THIS DRAWING AND SPECIFICATIONS, HEREIN, ARE THE PROPERTY OF DIGITAL EQUIPMENT CORPORATION AND SHALL NOT BE REPRODUCED OR COPIED OR USED IN WHOLE OR IN PART AS THE BASIS FOR THE MANUFACTURE OR SALE OF ITEMS WITHOUT WRITTEN PERMISSION. COPYRIGHT © 1976, DIGITAL EQUIPMENT CORPORATION"

REVISIONS		
CHK	CHANGE NO.	REV
	20004	D
REVISED & REDRAWN		

digital

DRN. | DATE 19-JUL-76 | ENG. | DATE 20 Jul 76
CHK. | DATE 20 Jul 76 | BOARD LOCATION: | SHEET 1 OF 1
TRN4EX.DRW[4,121] | 18-JUL-76 17:18 | NEXT HIGHER ASSEMBLY: B-DD-M8516-0
FIRST USED ON OPTION/MODEL: KL10

TITLE: E & C BUS TRANSLATOR

SIZE	CODE	NUMBER	REV.
D	CS	M8516-0-TR04	D

67

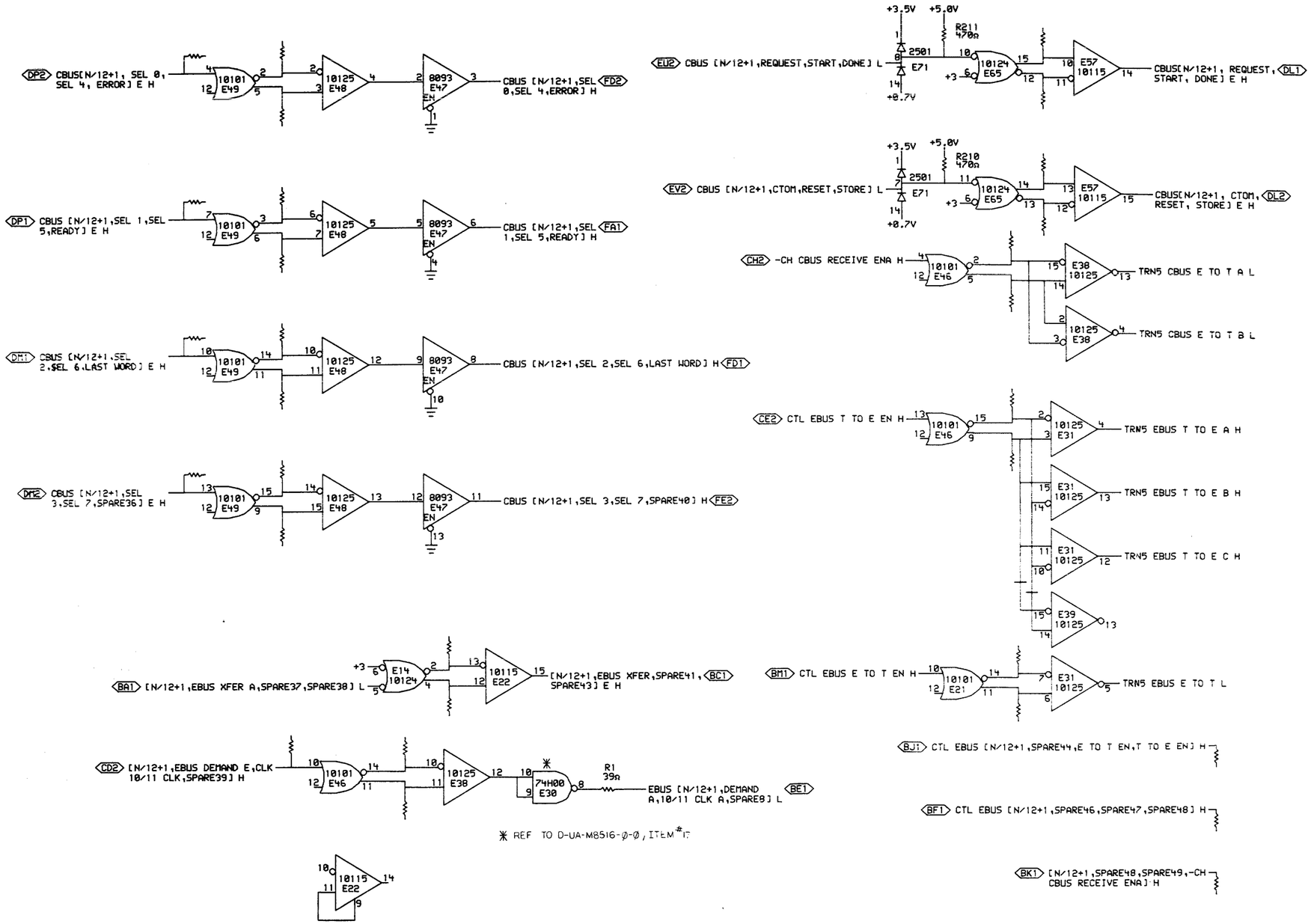

BOARD LOCATION	VARIABLE
4AF04	N=24
4AF05	N=12
4AF06	N=00

5 OF 6

"THIS DRAWING AND SPECIFICATIONS, HEREIN, ARE THE PROPERTY OF DIGITAL EQUIPMENT CORPORATION A D SHALL NOT BE REPRODUCED OR COPIED OR USED IN WHOLE OR IN PART AS THE BASIS FOR THE MANUFACTURE OR SALE OF ITEMS WITHOUT WRITTEN PERMISSION. COPYRIGHT © 1976, DIGITAL EQUIPMENT CORPORATION"

REVISIONS		
CHK	CHANGE NO.	REV
	C0004	D
	REVISED & REDRAWN	

digital

DRN. 7 DATE 19-JUL-76 ENG. DATE 20JUL76
CHK DATE 20JUL76 BOARD LOCATION: SHEET 1 OF 1
TRN5EX.DRW[4,121] 18-JUL-76 17:20 NEXT HIGHER ASSEMBLY: B-DD-M8516-0
FIRST USED ON OPTION/MODEL: KL10

TITLE: E & C BUS TRANSLATOR

SIZE	CODE	NUMBER	REV.
D	CS	M8516-0-TR05	D

68

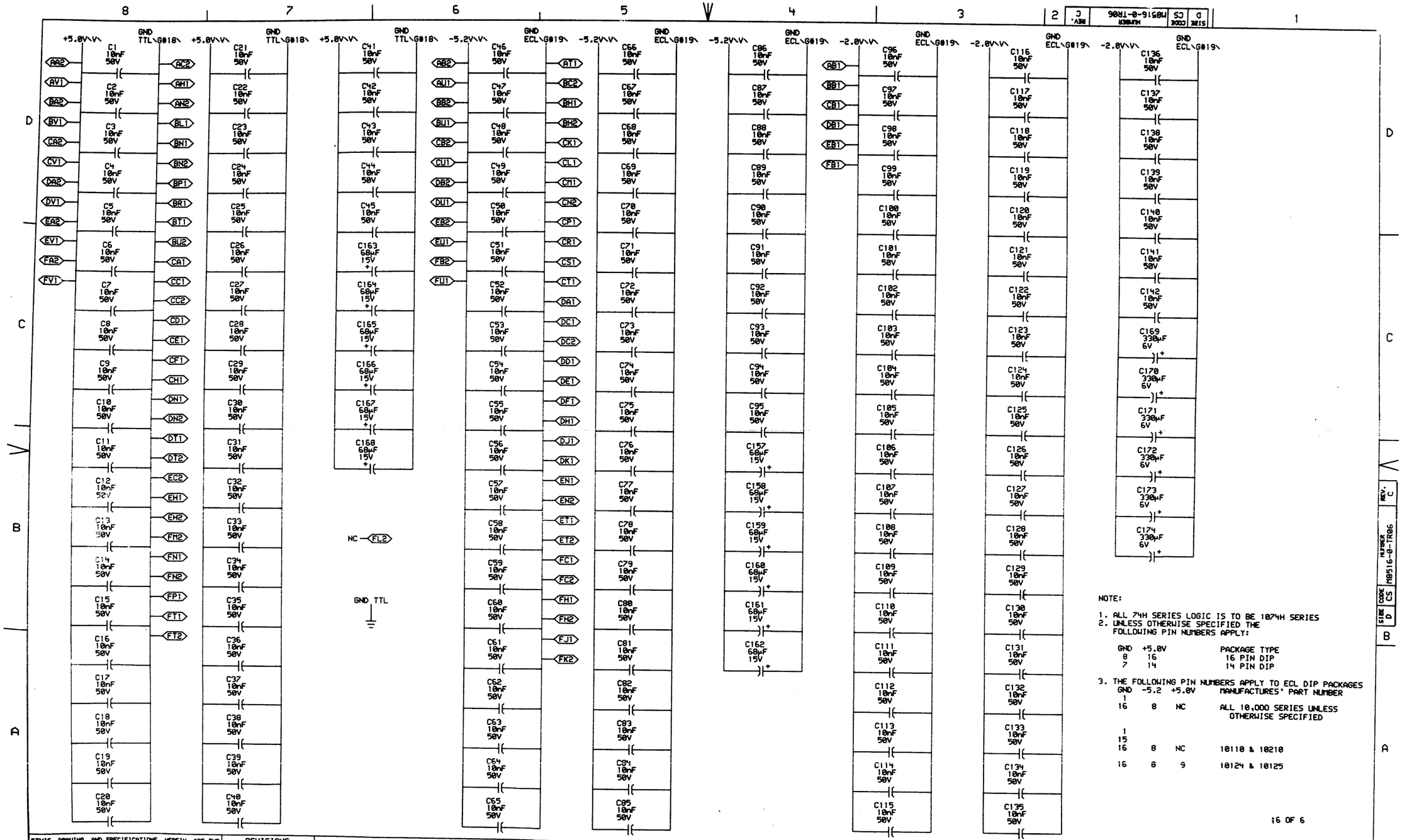

NOTE:

1. ALL 74H SERIES LOGIC IS TO BE 1074H SERIES
2. UNLESS OTHERWISE SPECIFIED THE FOLLOWING PIN NUMBERS APPLY:

GND	+5.0V		PACKAGE TYPE
8	16		16 PIN DIP
7	14		14 PIN DIP

3. THE FOLLOWING PIN NUMBERS APPLY TO ECL DIP PACKAGES

GND	-5.2	+5.0V	MANUFACTURES' PART NUMBER
1 16	8	NC	ALL 10,000 SERIES UNLESS OTHERWISE SPECIFIED
1 15 16	8	NC	10110 & 10210
16	8	9	10124 & 10125

;6 OF 6

"THIS DRAWING AND SPECIFICATIONS, HEREIN, ARE THE PROPERTY OF DIGITAL EQUIPMENT CORPORATION AND SHALL NOT BE REPRODUCED OR COPIED OR USED IN WHOLE OR IN PART A THE BASIS FOR THE MA UFACTURE OR SALE OF ITEMS WITHOUT WRITTEN PERMISSION. COPYRIGHT © 1976, DIGITAL EQUIPMENT CORPORATION"

REVISIONS		
CHK	CHANGE NO.	REV
	00004	D
	REVISED & REDRAWN	

digital

DRN. S. Lomby DATE 19-JUL-76
CHK'D DATE
ENG'G DATE 20 JUL 76
DATE 20 JUL 76
BOARD LOCATION:
SHEET 1 OF 1
TRNGEX.DRW[4,121] 18-JUL-76 17:21
NEXT HIGHER ASSEMBLY: B-DD-M8516-0
FIRST USED ON OPTION/MODEL: KL10

TITLE: E & C BUS TRANS POWER, GND, CAPS

SIZE	CODE	NUMBER	REV.
D	CS	M8516-0-TR06	C

69

RESISTOR LOC(PIN)	SHOWN ON DRW#	REF	VALUE	TERMINATES SIGNAL
R31(1)	TR03	C5	68Ω	%E11(1)
R29(1)	TR03	D5	68Ω	%E11(12)
R26(1)	TR03	D5	68Ω	%E11(13)
R27(1)	TR03	D5	68Ω	%E11(14)
R28(1)	TR03	D5	68Ω	%E11(15)
R24(1)	TR03	C5	68Ω	%E11(2)
R30(1)	TR03	C5	68Ω	%E11(3)
R25(1)	TR03	C5	68Ω	%E11(4)
R43(1)	TR03	A2	68Ω	%E14(1)
R51(1)	TR04	B5	68Ω	%E14(12)
R52(1)	TR04	B5	68Ω	%E14(15)
R47(1)	TR05	B6	68Ω	%E14(2)
R50(1)	TR03	A2	68Ω	%E14(3)
R48(1)	TR05	B6	68Ω	%E14(4)
R53(1)	TR04	C5	68Ω	%E15(2)
R54(1)	TR04	C5	68Ω	%E15(4)
R19(1)	TR03	B7	68Ω	%E18(11)
R18(1)	TR03	B7	68Ω	%E18(14)
R23(1)	TR03	B7	68Ω	%E18(15)
R20(1)	TR03	B7	68Ω	%E18(2)
R17(1)	TR03	A7	68Ω	%E18(3)
R21(1)	TR03	A7	68Ω	%E18(5)
R16(1)	TR03	A7	68Ω	%E18(6)
R22(1)	TR03	B7	68Ω	%E18(9)
R34(1)	TR03	D7	68Ω	%E20(11)
R35(1)	TR03	D7	68Ω	%E20(14)
R32(1)	TR03	D7	68Ω	%E20(15)
R36(1)	TR03	C7	68Ω	%E20(2)
R38(1)	TR03	C7	68Ω	%E20(3)
R37(1)	TR03	C7	68Ω	%E20(5)
R39(1)	TR03	C7	68Ω	%E20(6)
R33(1)	TR03	D7	68Ω	%E20(9)
R213(1)	TR05	B3	68Ω	%E21(11)
R212(1)	TR05	B3	68Ω	%E21(14)
R40(1)	TR03	A4	68Ω	%E21(3)
R41(1)	TR03	A4	68Ω	%E21(6)
R84(1)	TR03	B2	68Ω	%E34(1)
R88(1)	TR03	D2	68Ω	%E34(12)
R81(1)	TR03	D2	68Ω	%E34(13)
R82(1)	TR03	C2	68Ω	%E34(14)

RESISTOR LOC(PIN)	SHOWN ON DRW#	REF	VALUE	TERMINATES SIGNAL
R87(1)	TR03	D2	68Ω	%E34(15)
R86(1)	TR03	C2	68Ω	%E34(2)
R83(1)	TR03	C2	68Ω	%E34(3)
R85(1)	TR03	C2	68Ω	%E34(4)
R96(1)	TR04	A4	68Ω	%E35(1)
R91(1)	TR04	A4	68Ω	%E35(12)
R93(1)	TR04	A4	68Ω	%E35(13)
R94(1)	TR04	A4	68Ω	%E35(14)
R92(1)	TR04	A4	68Ω	%E35(15)
R89(1)	TR04	B5	68Ω	%E35(2)
R95(1)	TR04	A4	68Ω	%E35(3)
R90(1)	TR04	B5	68Ω	%E35(4)
R109(1)	TR04	D4	68Ω	%E37(1)
R108(1)	TR04	C4	68Ω	%E37(12)
R107(1)	TR04	C4	68Ω	%E37(15)
R105(1)	TR04	C4	68Ω	%E37(2)
R111(1)	TR04	D4	68Ω	%E37(3)
R106(1)	TR04	D4	68Ω	%E37(4)
R58(1)	TR01	B3	68Ω	%E40(11)
R57(1)	TR01	A3	68Ω	%E40(14)
R66(1)	TR01	A3	68Ω	%E40(15)
R61(1)	TR01	A3	68Ω	%E40(2)
R59(1)	TR01	B3	68Ω	%E40(3)
R62(1)	TR01	A3	68Ω	%E40(5)
R60(1)	TR01	B3	68Ω	%E40(6)
R65(1)	TR01	A3	68Ω	%E40(9)
R79(1)	TR03	D4	68Ω	%E41(11)
R80(1)	TR03	D4	68Ω	%E41(14)
R75(1)	TR03	D4	68Ω	%E41(15)
R74(1)	TR03	C4	68Ω	%E41(2)
R77(1)	TR03	C4	68Ω	%E41(3)
R73(1)	TR03	C4	68Ω	%E41(5)
R78(1)	TR03	C4	68Ω	%E41(6)
R76(1)	TR03	C4	68Ω	%E41(9)
R102(1)	TR04	C7	68Ω	%E44(15)
R100(1)	TR04	D7	68Ω	%E44(2)
R97(1)	TR04	D7	68Ω	%E44(3)
R99(1)	TR04	D7	68Ω	%E44(5)
R98(1)	TR04	D7	68Ω	%E44(6)
R101(1)	TR04	C7	68Ω	%E44(9)

RESISTOR LOC(PIN)	SHOWN ON DRW#	REF	VALUE	TERMINATES SIGNAL
R114(1)	TR05	A6	68Ω	%E46(11)
R115(1)	TR05	A6	68Ω	%E46(14)
R56(1)	TR05	C3	68Ω	%E46(15)
R112(1)	TR05	C3	68Ω	%E46(2)
R116(1)	TR01	A7	68Ω	%E46(3)
R113(1)	TR05	C3	68Ω	%E46(5)
R117(1)	TR01	A7	68Ω	%E46(6)
R55(1)	TR05	C3	68Ω	%E46(9)
R122(1)	TR05	C7	68Ω	%E49(11)
R123(1)	TR05	C7	68Ω	%E49(14)
R128(1)	TR05	B7	68Ω	%E49(15)
R130(1)	TR05	D7	68Ω	%E49(2)
R120(1)	TR05	D7	68Ω	%E49(3)
R131(1)	TR05	D7	68Ω	%E49(5)
R121(1)	TR05	C7	68Ω	%E49(6)
R129(1)	TR05	B7	68Ω	%E49(9)
R144(1)	TR01	C7	68Ω	%E50(11)
R145(1)	TR01	C7	68Ω	%E50(14)
R146(1)	TR01	C7	68Ω	%E50(15)
R142(1)	TR01	D7	68Ω	%E50(2)
R141(1)	TR01	D7	68Ω	%E50(3)
R143(1)	TR01	D7	68Ω	%E50(5)
R140(1)	TR01	D7	68Ω	%E50(6)
R147(1)	TR01	C7	68Ω	%E50(9)
R150(1)	TR01	C4	68Ω	%E51(11)
R151(1)	TR01	C4	68Ω	%E51(14)
R152(1)	TR01	C4	68Ω	%E51(15)
R148(1)	TR01	B7	68Ω	%E51(2)
R155(1)	TR01	D4	68Ω	%E51(3)
R149(1)	TR01	B7	68Ω	%E51(5)
R154(1)	TR01	D4	68Ω	%E51(6)
R153(1)	TR01	C4	68Ω	%E51(9)
R177(1)	TR02	B7	68Ω	%E54(11)
R176(1)	TR02	B7	68Ω	%E54(14)
R175(1)	TR02	D4	68Ω	%E54(15)
R179(1)	TR01	B4	68Ω	%E54(2)
R172(1)	TR02	C7	68Ω	%E54(3)
R178(1)	TR01	B4	68Ω	%E54(5)
R173(1)	TR02	C7	68Ω	%E54(6)
R174(1)	TR02	D4	68Ω	%E54(9)

RESISTOR LOC(PIN)	SHOWN ON DRW#	REF	VALUE	TERMINATES SIGNAL
R187(1)	TR01	A7	68Ω	%E55(11)
R186(1)	TR01	A7	68Ω	%E55(14)
R189(1)	TR02	C4	68Ω	%E55(3)
R188(1)	TR02	B4	68Ω	%E55(6)
R160(1)	TR01	D5	68Ω	%E60(1)
R159(1)	TR01	C5	68Ω	%E60(12)
R162(1)	TR01	C5	68Ω	%E60(13)
R163(1)	TR01	C5	68Ω	%E60(14)
R158(1)	TR01	C5	68Ω	%E60(15)
R157(1)	TR01	D5	68Ω	%E60(2)
R161(1)	TR01	D5	68Ω	%E60(3)
R156(1)	TR01	D5	68Ω	%E60(4)
R170(1)	TR01	D2	68Ω	%E61(1)
R168(1)	TR01	C2	68Ω	%E61(12)
R167(1)	TR01	C2	68Ω	%E61(13)
R166(1)	TR01	C2	68Ω	%E61(14)
R169(1)	TR01	C2	68Ω	%E61(15)
R165(1)	TR01	B5	68Ω	%E61(2)
R171(1)	TR01	D2	68Ω	%E61(3)
R164(1)	TR01	B5	68Ω	%E61(4)
R191(1)	TR02	C5	68Ω	%E64(1)
R195(1)	TR02	B5	68Ω	%E64(12)
R196(1)	TR02	D3	68Ω	%E64(13)
R197(1)	TR02	D3	68Ω	%E64(14)
R194(1)	TR02	B5	68Ω	%E64(15)
R192(1)	TR01	B2	68Ω	%E64(2)
R190(1)	TR02	C5	68Ω	%E64(3)
R193(1)	TR01	B2	68Ω	%E64(4)
R199(1)	TR02	B3	68Ω	%E65(1)
R202(1)	TR05	D3	68Ω	%E65(12)
R201(1)	TR05	C3	68Ω	%E65(13)
R200(1)	TR05	D3	68Ω	%E65(14)
R203(1)	TR05	D3	68Ω	%E65(15)
R204(1)	TR01	A5	68Ω	%E65(2)
R198(1)	TR02	C3	68Ω	%E65(3)
R205(1)	TR01	A5	68Ω	%E65(4)
R6(1)	TR03	A5	68Ω	%E9(1)
R11(1)	TR03	B5	68Ω	%E9(12)
R8(1)	TR03	B5	68Ω	%E9(13)
R9(1)	TR03	B5	68Ω	%E9(14)

NOTE:

1. ALL TERMINATORS HAVE PIN TWO CONNECTED TO -2.0V AND ARE 5% 1/4WATT UNLESS OTHERWISE SPECIFIED
2. ENTRIES ARE SORTED BY SIGNAL NAME
3. % INDICATES OUTPUT OF DIP LOC AND () INDICATES PIN NUMBER

"THIS DRAWING AND SPECIFICATIONS, HEREIN, ARE THE PROPERTY OF DIGITAL EQUIPMENT CORPORATION AND SHALL NOT BE REPRODUCED OR COPIED OR USED IN WHOLE OR IN PART AS THE BASIS FOR THE MANUFACTURE OR SALE OF ITEMS WITHOUT WRITTEN PERMISSION.
COPYRIGHT © 1976, DIGITAL EQUIPMENT CORPORATION"

REVISIONS

CHK	CHANGE NO.	REV
	00004	D
	REVISED & REDRAWN	

digital

DRN. C Smith DATE 18-JUL-76
CHK'D DATE 20-Jul-76
ENG'R DATE 20-Jul-76
BOARD LOCATION:
SHEET 1 OF 2
M8516I.RVD[4,427] 18-JUL-76 17:50
NEXT HIGHER ASSEMBLY: B-DD-M8516-0
FIRST USED ON OPTION/MODEL: KL10

TITLE: E & C BUS TRANS TERMINATORS

SIZE	CODE	NUMBER	REV.
D	CS	M8516-0-RES	D

RESISTOR LOC(PIN)	SHOWN ON DRW#	REF	VALUE	TERMINATES SIGNAL
R10(1)	TR03	B5	68Ω	%E9(15)
R5(1)	TR03	A5	68Ω	%E9(2)
R7(1)	TR03	A5	68Ω	%E9(3)
R4(1)	TR03	B5	68Ω	%E9(4)
R138(1)	TR01	D7	68Ω	CBUS D[N+00] TE H
R137(1)	TR01	D7	68Ω	CBUS D[N+01] TE H
R135(1)	TR01	C7	68Ω	CBUS D[N+02] TE H
R134(1)	TR01	C7	68Ω	CBUS D[N+03] TE H
R136(1)	TR01	B7	68Ω	CBUS D[N+04] TE H
R133(1)	TR01	D4	68Ω	CBUS D[N+05] TE H
R132(1)	TR01	C4	68Ω	CBUS D[N+06] TE H
R139(1)	TR01	C4	68Ω	CBUS D[N+07] TE H
R101(1)	TR01	B4	68Ω	CBUS D[N+08] TE H
R100(1)	TR02	C7	68Ω	CBUS D[N+09] TE H
R103(1)	TR02	B7	68Ω	CBUS D[N+10] TE H
R102(1)	TR02	D5	68Ω	CBUS D[N+11] TE H
R125(1)	TR05	D7	68Ω	CBUS [N/12+1,SEL 1,SEL 5,READY] E H
R127(1)	TR05	C7	68Ω	CBUS [N/12+1,SEL 2,SEL 6,LAST WORD] E H
R126(1)	TR05	B7	68Ω	CBUS [N/12+1,SEL 3,SEL 7,SPARE36] E H
R104(1)	TR02	C5	68Ω	CBUS [N/12+1,SPARE10,SPARE11,SPARE12] TE H
R105(1)	TR01	A7	68Ω	CBUS[N/12+1, PAR LEFT, PAR RIGHT, SPARE1] TE H
R124(1)	TR05	D7	68Ω	CBUS[N/12+1, SEL 0, SEL 4, ERROR] E H
R207(1)	TR05	A2	68Ω	CTL EBUS [N/12+1,SPARE44,E TO T EN,T TO E EN] H
R208(1)	TR05	A2	68Ω	CTL EBUS [N/12+1,SPARE46,SPARE47,SPARE48] H
R42(1)	TR03	D8	68Ω	EBUS D[N+00] E H
R46(1)	TR03	D8	68Ω	EBUS D[N+01] E H
R43(1)	TR03	C8	68Ω	EBUS D[N+02] E H
R44(1)	TR03	C8	68Ω	EBUS D[N+03] E H
R15(1)	TR03	B8	68Ω	EBUS D[N+04] E H
R14(1)	TR03	B8	68Ω	EBUS D[N+05] E H
R13(1)	TR03	B8	68Ω	EBUS D[N+06] E H
R12(1)	TR03	A8	68Ω	EBUS D[N+07] E H
R71(1)	TR03	D4	68Ω	EBUS D[N+08] E H
R72(1)	TR03	D4	68Ω	EBUS D[N+09] E H
R68(1)	TR03	C4	68Ω	EBUS D[N+10] E H
R67(1)	TR03	C4	68Ω	EBUS D[N+11] E H
R63(1)	TR01	B4	68Ω	EBUS[N/12+1, F00, CS00, CS04] E H
R69(1)	TR01	A4	68Ω	EBUS[N/12+1, F02, CS02, CS06] E H
R70(1)	TR01	B4	68Ω	[N/12+1,APR EBUS F01,EBUS CS01,EBUS CS05] E H
R110(1)	TR01	A7	68Ω	[N/12+1,CLK EBUS CLK, SPARE3,SPARE4] H

RESISTOR LOC(PIN)	SHOWN ON DRW#	REF	VALUE	TERMINATES SIGNAL
R64(1)	TR01	A4	68Ω	[N/12+1,CTL CONSOLE CONTROL,EBUS CS03 E,CLK EBUS RESET E] H
R45(1)	TR03	A4	68Ω	[N/12+1,CTL EBUS PARITY OUT,EBUS SPARE19, EBUS SPARE20] E H
R103(1)	TR04	D7	68Ω	[N/12+1,CTL EBUS STATUS 00 E,CTL EBUS STATUS 03 E,CON EBOX HALTED] H
R104(1)	TR04	D7	68Ω	[N/12+1,CTL EBUS STATUS 01 E,CLK ERROR STOP,CTL EBUS STATUS 07 E] H
R118(1)	TR04	C7	68Ω	[N/12+1,CTL EBUS STATUS 02 E,CON RUN,CTL EBUS STATUS 00 E] H
R119(1)	TR05	A7	68Ω	[N/12+1,EBUS DEMAND E,CLK 10/11 CLK,SPARE39] H
R206(1)	TR05	A2	68Ω	[N/12+1,SPARE40,SPARE49,-CH CBUS RECEIVE ENA] H

NOTE:

1. ALL TERMINATORS HAVE PIN TWO CONNECTED TO -2.0V AND ARE 5% 1/4WATT UNLESS OTHERWISE SPECIFIED
2. ENTRIES ARE SORTED BY SIGNAL NAME
3. % INDICATES OUTPUT OF DIP LOC AND ( ) INDICATES PIN NUMBER

"THIS DRAWING AND SPECIFICATIONS, HEREIN, A E THE PROPERTY OF DIGITAL EQUIPMENT CORPORATION AND SHALL NOT BE REPRODUCED OR COPIED OR USED IN WHOLE OR IN PART AS THE BASIS FOR THE MANUFACTURE OR SALE OF ITEMS WITHOUT WRITTEN PERMISSION. COPYRIGHT © 1976, DIGITAL EQUIPMENT CORPORATION"

REVISIONS		
CHK	CHANGE NO.	REV

DRN. C Smith DATE 18-JUL-76 ENGT DATE 20JAN76
CHK'D DATE 20JAN76 BOARD LOCATION: SHEET 2 OF 2
M8516Z.RVD[4,427] 18-JUL-76 17:50 NEXT HIGHER ASSEMBLY:
FIRST USED ON OPTION/MODEL: KL10 B-DD-M8516-0

TITLE: E & C BUS TRANS TERMINATORS

SIZE	CODE	NUMBER	REV.
D	CS	M8516-0-RES	D

REVISION CONTROL SHEET

CUSTOMER PRINT SET	MFG SET	DRAWING NO	NO OF SHT	DESCRIPTION	OPTION NO/FILE DATE	REVISIONS	
				MODULE REVISION		A	B
		D-UA-M8517-Ø-Ø	5	MEMORY BUFFER		-	A
		D-CS-M8517-Ø-MBØ1	1	MB BOARD MEM TO C&PT IN MIX		-	A
		D-CS-M8517-Ø-MBØ2	1	MB BOARD MB'S & MB OUT MIXERS		-	A
		D-CS-M8517-Ø-MBØ3	1	MB BOARD CH BUF MIXERS AND RAMS		-	A
		D-CS-M8517-Ø-MBØ4	1	MB BOARD CCW MIX & MB IN MIX		-	A
		D-CS-M8517-Ø-MBØ5	1	MB BOARD CH BUF ADR & DATA INPUT		-	A
		D-CS-M8517-Ø-MBØ6	1	MB BOARD POWER, GND, CAP		-	A
		D-CS-M8517-Ø-RES	1	MB BOARD TERMINATORS		-	A
		K-CO-M8517-Ø-4	1	MEMORY BUFFER (CALDEC DATA BASE)		C	C
		D-AH-M8517-Ø-5	4	MEMORY BUFFER		B	B
		B-MH-M8517-Ø-6	1	MODULE ECO HISTORY		-	A
		5010634	-	ETCH CIRCUIT BOARD		C	C
		PQQ-M8517-ØØ		PROCESS SHEET (REF ONLY)		-	-

CUSTOMER PRINT SET CODES
X = PRINT OF DOCUMENT INCLUDED IN PRINT SET
C = INCLUDES ALL PRINTS INDICATED ON DOCUMENT
S = CONFIDENTIAL AUTHORIZED SIGNATURE REQUIRED

ECO NO	
ORIG	00001

TITLE		SIZE	CODE	NUMBER	REV
MEMORY BUFFER	SHEET 2 OF 2	B	DD	M8517-Ø	A

MR

"THIS DRAWING AND SPECIFICATIONS, HEREIN, ARE THE PROPERTY OF DIGITAL EQUIPMENT CORPORATION AND SHALL NOT BE REPRODUCED OR COPIED OR USED IN WHOLE OR IN PART AS THE BASIS FOR THE MANUFACTURE OR SALE OF ITEMS WITHOUT WRITTEN PERMISSION. COPYRIGHT © 1974 DIGITAL EQUIPMENT CORPORATION"

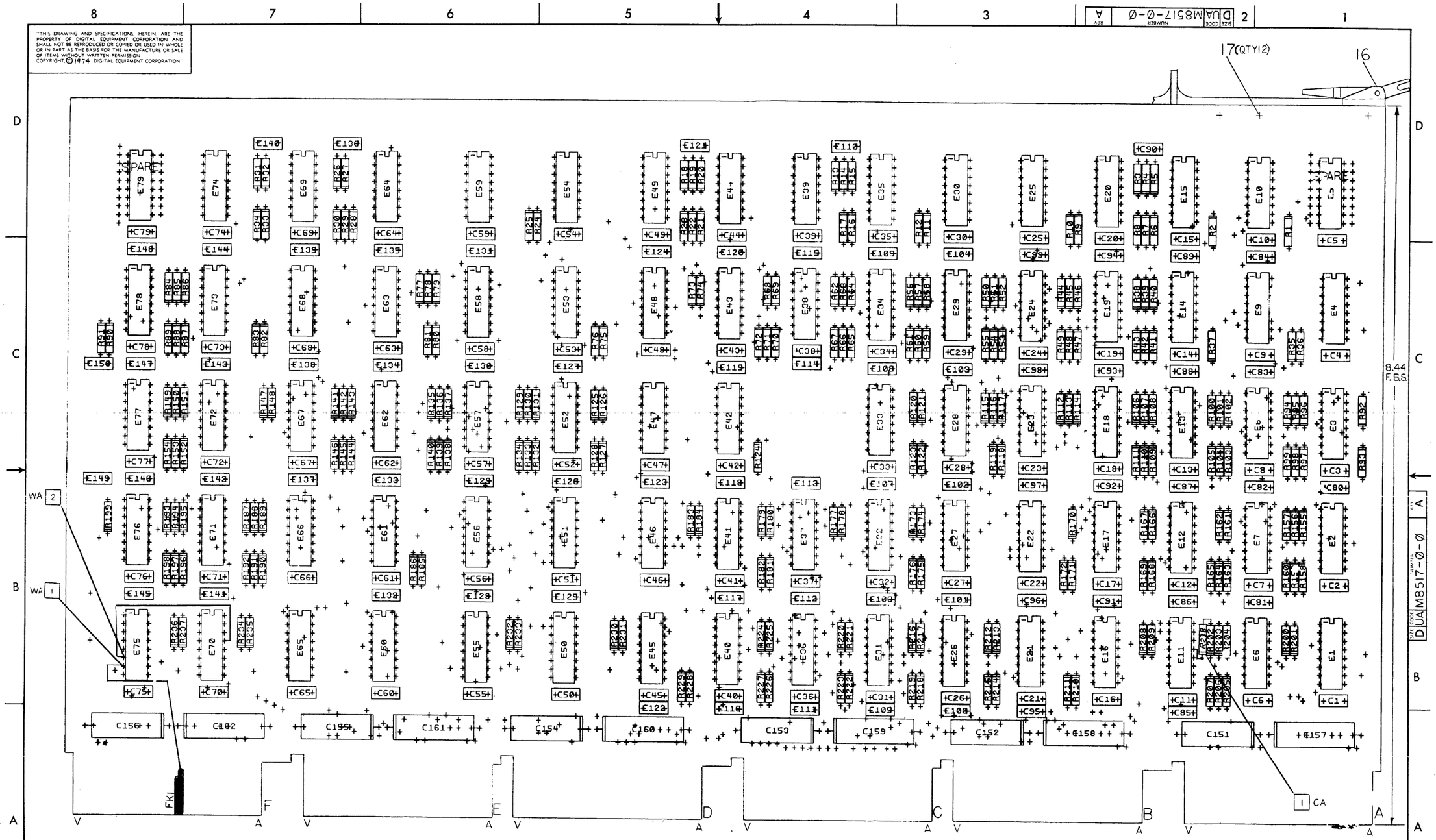

REVISIONS		
CHK	CHANGE NO	REV

TITLE	SIZE	CODE	NUMBER	REV.
MEMORY BUFFER	D	UA	M8517-0-0	A
SCALE —	SHEET 2 OF 5	DIST.		

73 MR

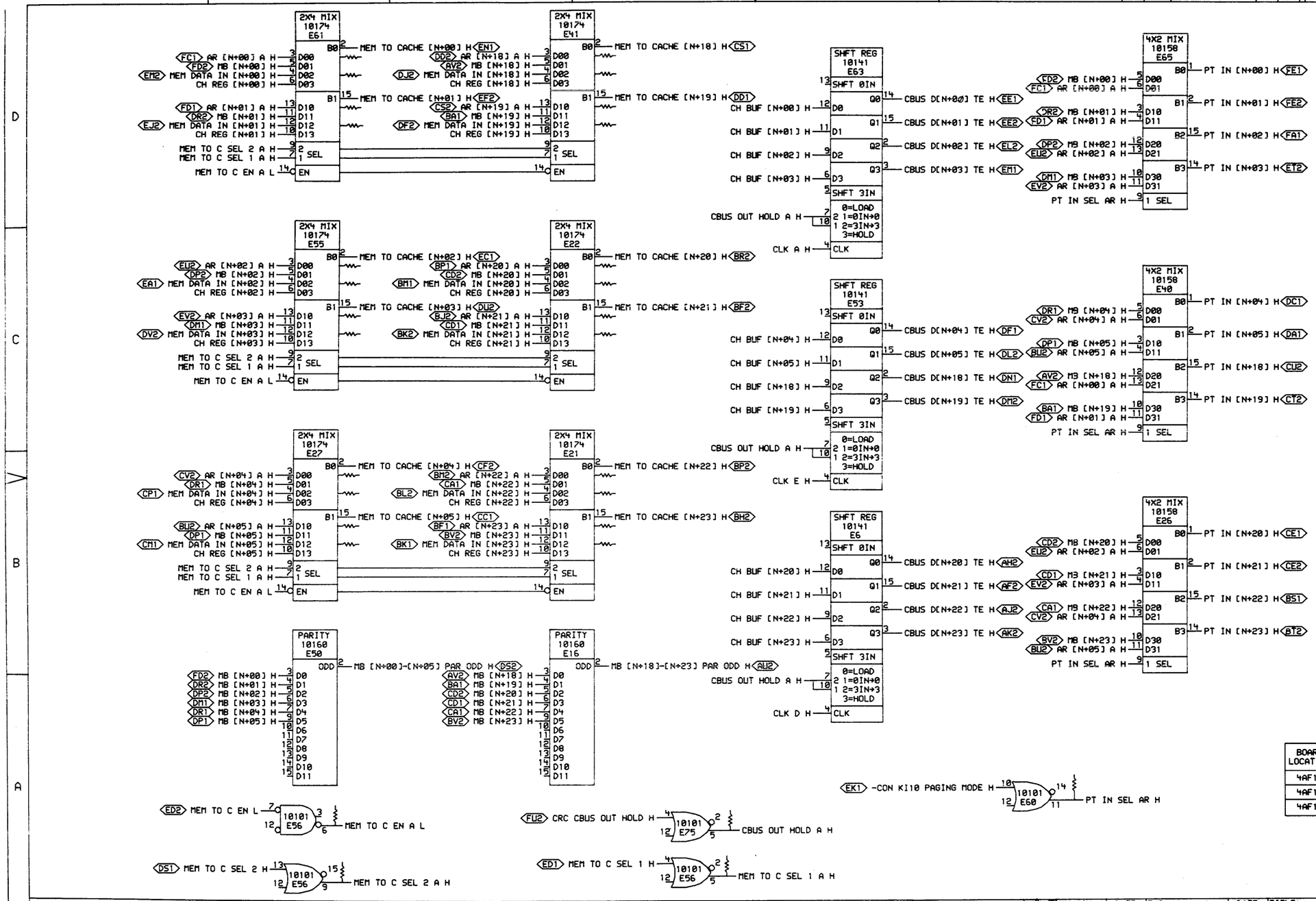

BOARD LOCATION	N
4AF16	0
4AF15	6
4AF14	12

1 OF 6

"THIS DRAWING AND SPECIFICATIONS, HEREIN, ARE THE PROPERTY OF DIGITAL EQUIPMENT CORPORATION AND SHALL NOT BE REPRODUCED OR COPIED OR USED IN WHOLE OR IN PART AS THE BASIS FOR THE MANUFACTURE OR SALE OF ITEMS WITHOUT WRITTEN PERMISSION. COPYRIGHT © 1976, DIGITAL EQUIPMENT CORPORATION"

REVISIONS

CHK	CHANGE NO.	REV

digital

DRW. L. Loomis DATE 03-JUN-76 ENG. J.D. Allen DATE 7 June 76
CHK. W. Hyslop DATE 6/8/76 BOARD LOCATION: SHEET 1 OF 1
MB1EX.DRW[4,121] 03-JUN-76 11:03 NEXT HIGHER ASSEMBLY: B-DD-M8517-0
FIRST USED ON OPTION/MODEL: KL10

TITLE: MB BOARD MEM TO C & PT IN MIX

SIZE	CODE	NUMBER	REV.
D	CS	M8517-0-MB01	A

74

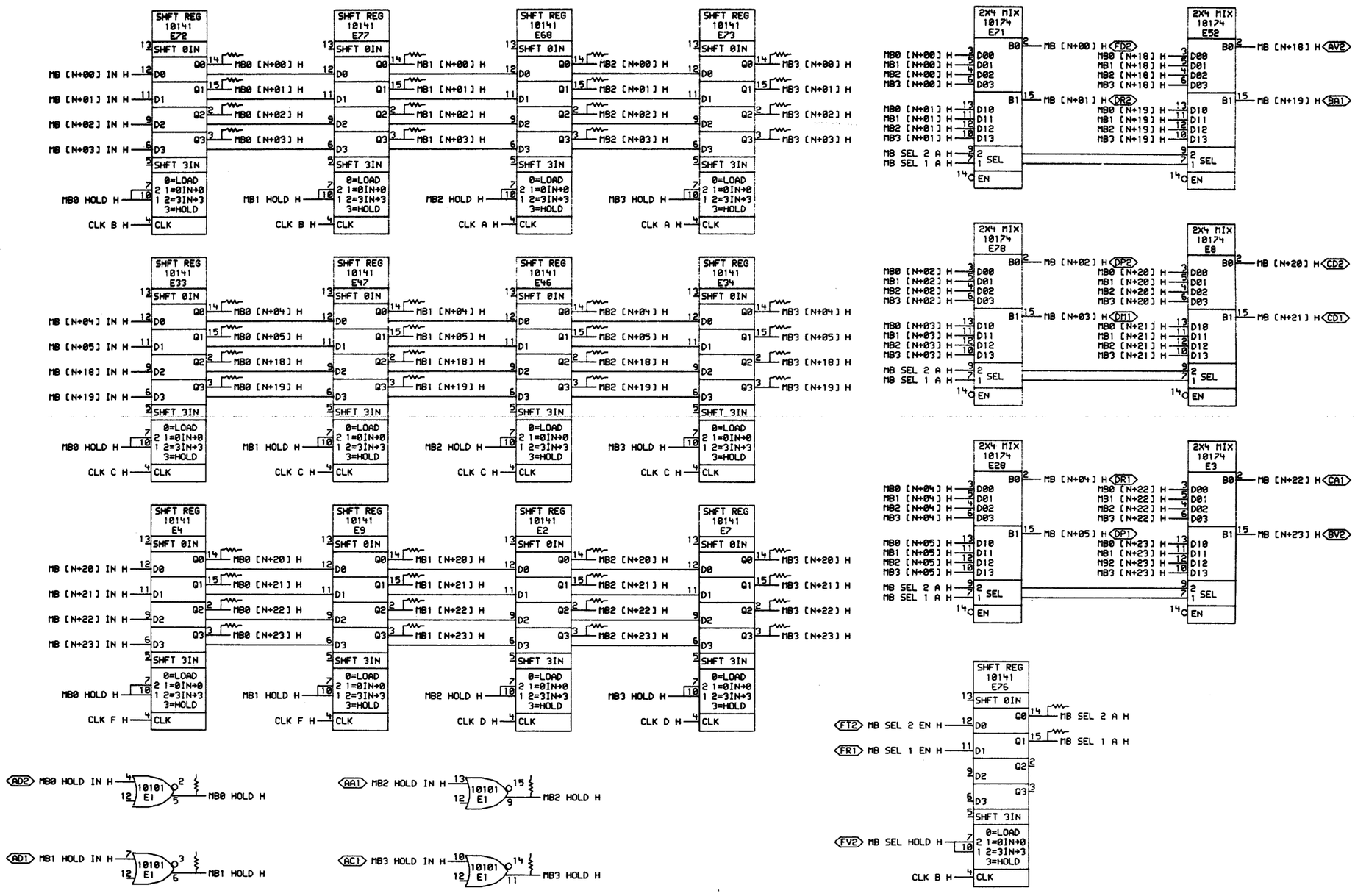

2 OF 6

"THIS DRAWING AND SPECIFICATIONS, HEREIN, ARE THE PROPERTY OF DIGITAL EQUIPMENT CORPORATION AND SHALL NOT BE REPRODUCED OR COPIED OR USED IN WHOLE OR IN PART AS THE BASIS FOR THE MANUFACTURE OR SALE OF ITEMS WITHOUT WRITTEN PERMISSION. COPYRIGHT © 1976, DIGITAL EQUIPMENT CORPORATION"

REVISIONS		
CHK	CHANGE NO.	REV
—	M8517-0-0001	A

digital

DRN. L. Cooney — DATE 03-JUN-76
CHK'D. [illegible] — DATE 6/3/76
ENG. J.D. Allen — DATE 7 Jun 76
BOARD LOCATION:
SHEET 1 OF 1
MB2EX.DRW[4,121] 20-MAY-76 17:28
NEXT HIGHER ASSEMBLY: B-DD-M8517-0
FIRST USED ON OPTION/MODEL: KL10

TITLE: MB BOARD MB'S & MB OUT MIXERS

SIZE	CODE	NUMBER	REV.
D	CS	M8517-0-MB02	A

75

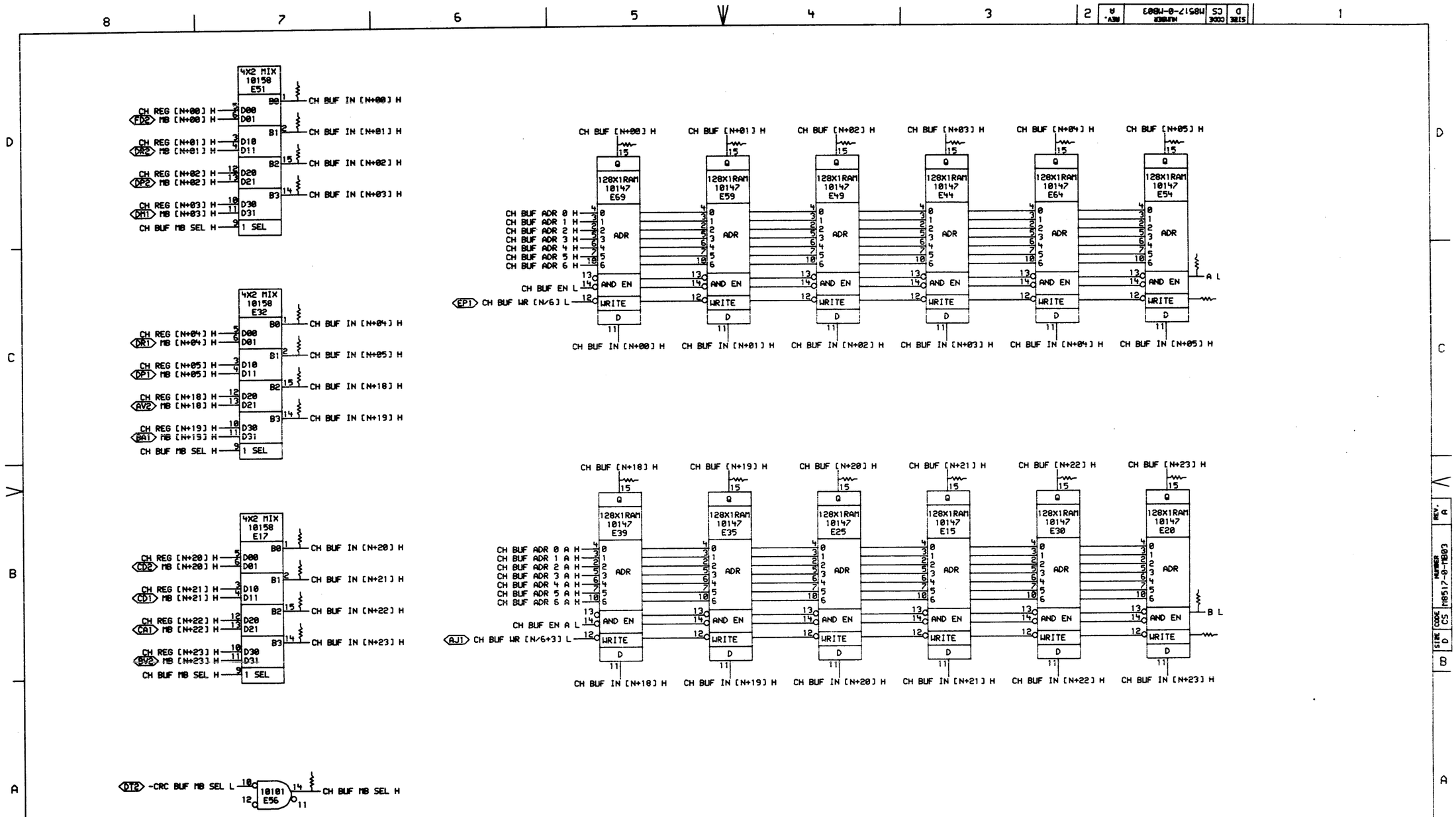

3 OF 6

"THIS DRAWING AND SPECIFICATIONS, HEREIN, ARE THE PROPERTY OF DIGITAL EQUIPMENT CORPORATION AND SHALL NOT BE REPRODUCED OR COPIED OR USED IN WHOLE OR IN PART AS THE BASIS FOR THE MANUFACTURE OR SALE OF ITEMS WITHOUT WRITTEN PERMISSION. COPYRIGHT © 1976, DIGITAL EQUIPMENT CORPORATION"

REVISIONS		
CHK	CHANGE NO.	REV
–	M8517-00001	A
	74-8070000010	17-2-76
	74-8070135	
		19-JUL-76

digital

DRN. L. Loonby DATE 03-JUN-76
CHK. DATE 6/9/76
MB3EX.DRW[4,121] 20-MAY-76 17:38
FIRST USED ON OPTION/MODEL: KL10

ENG. DATE 7 Jun 76
BOARD LOCATION:
SHEET 1 OF 1
NEXT HIGHER ASSEMBLY: B-DD-M8517-0

TITLE: MB BOARD CH BUF MIXERS & RAMS

SIZE	CODE	NUMBER	REV.
D	CS	M8517-0-MB03	A

76

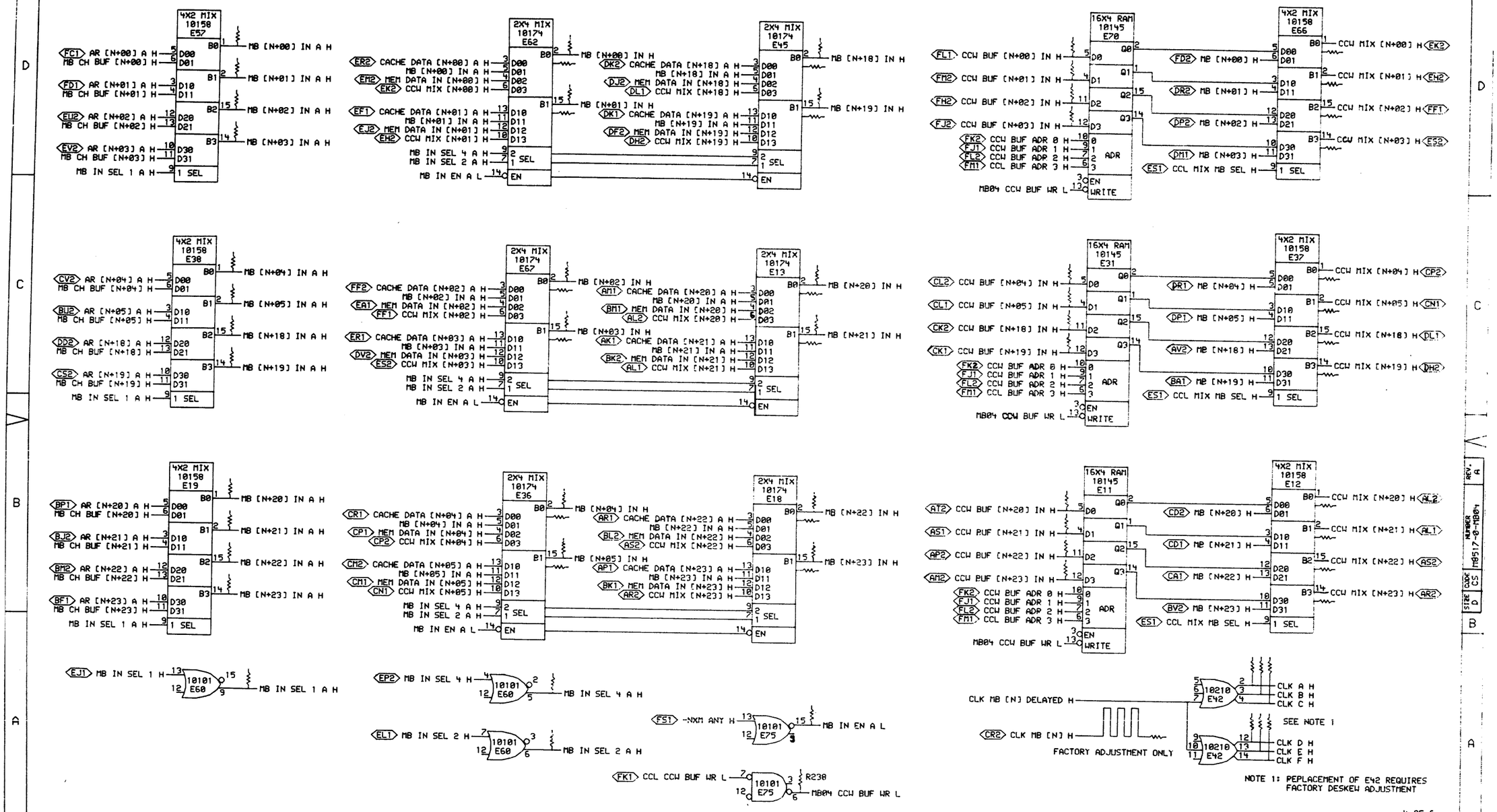

"THIS DRAWING AND SPECIFICATIONS, HEREIN, ARE THE PROPERTY OF DIGITAL EQUIPMENT CORPORATION AND SHALL NOT BE REPRODUCED OR COPIED OR USED IN WHOLE OR IN PART AS THE BASIS FOR THE MANUFACTURE OR SALE OF ITEMS WITHOUT WRITTEN PERMISSION. COPYRIGHT © 1976, DIGITAL EQUIPMENT CORPORATION"

REVISIONS		
CHK	CHANGE NO.	REV
—	M8517-0-0004	A

digital

DRN. D. Loosly DATE 08-JUN-76 ENG. J. Allen DATE 8 Jun 76
CHK. W. Stephens DATE 6/8/76 BOARD LOCATION: SHEET 1 OF 1

M84EX.DRW[4,121] 08-JUN-76 11:07 NEXT HIGHER ASSEMBLY: B-DD-M8517-0

FIRST USED ON OPTION/MODEL: KL10

TITLE: MB BOARD CCW MIX & MB IN MIX

SIZE	CODE	NUMBER	REV.
D	CS	M8517-0-MB04	A

77

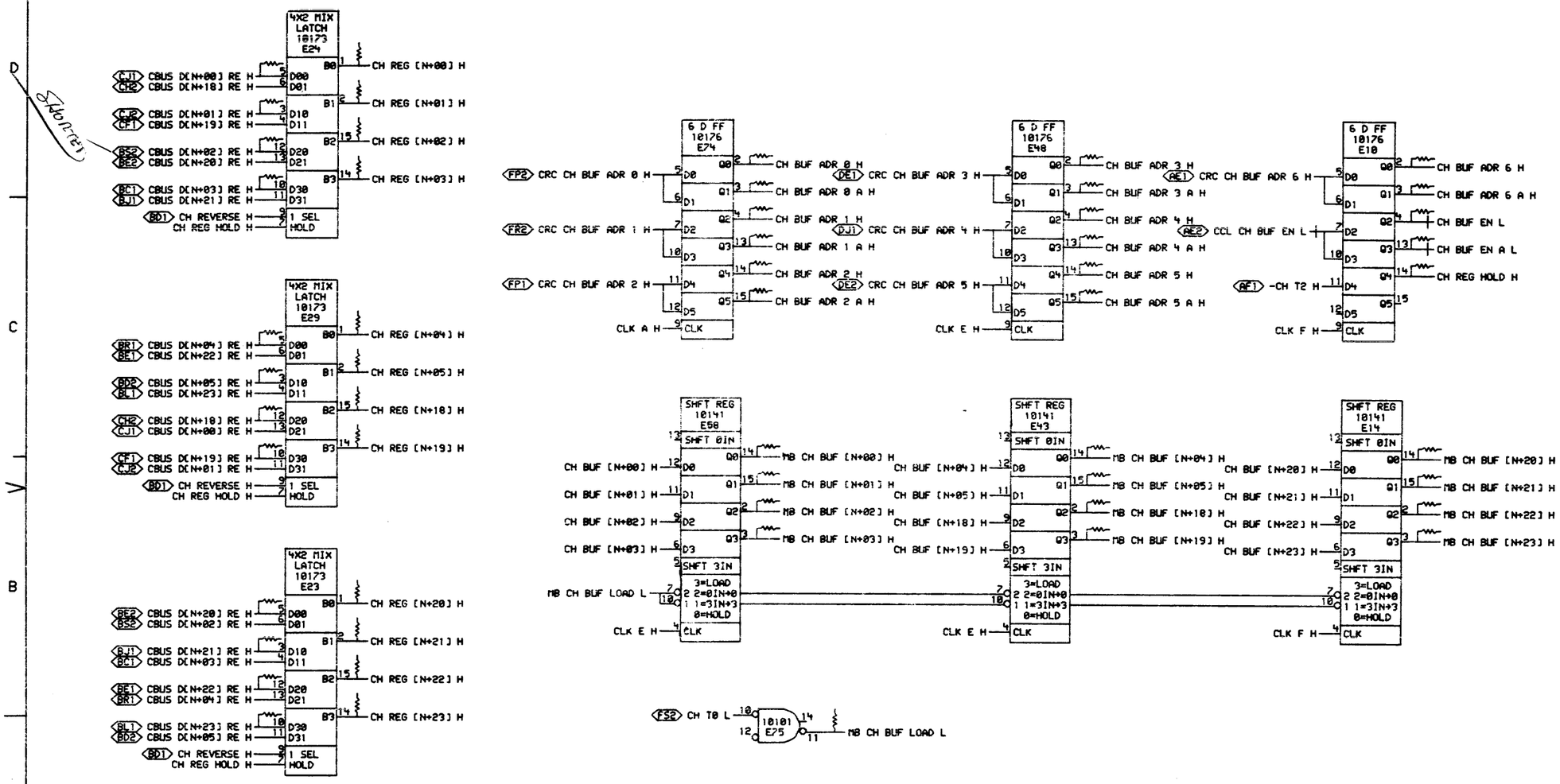

5 OF 6

"THIS DRAWING AND SPECIFICATIONS, HEREIN, ARE THE PROPERTY OF DIGITAL EQUIPMENT CORPORATION AND SHALL NOT BE REPRODUCED OR COPIED OR USED IN WHOLE OR IN PART AS THE BASIS FOR THE MANUFACTURE OR SALE OF ITEMS WITHOUT WRITTEN PERMISSION. COPYRIGHT © 1976, DIGITAL EQUIPMENT CORPORATION"

REVISIONS		
CHK	CHANGE NO.	REV
—	M8517-00001	A

T. ROGERS

digital

DRN. K. Loomis DATE 07-JUN-76
CHK. DATE 6/8/76
M85EX.DRW[4,121] 24-MAY-76 18:04
FIRST USED ON OPTION/MODEL: KL10

ENG. J.D. Allen DATE 7 JUN 76
BOARD LOCATION:
SHEET 1 OF 1
NEXT HIGHER ASSEMBLY: B-DD-M8517-0

TITLE: MB BOARD CH BUF ADR & DATA INPUT

SIZE	CODE	NUMBER	REV.
D	CS	M8517-0-MB05	A

MR

78

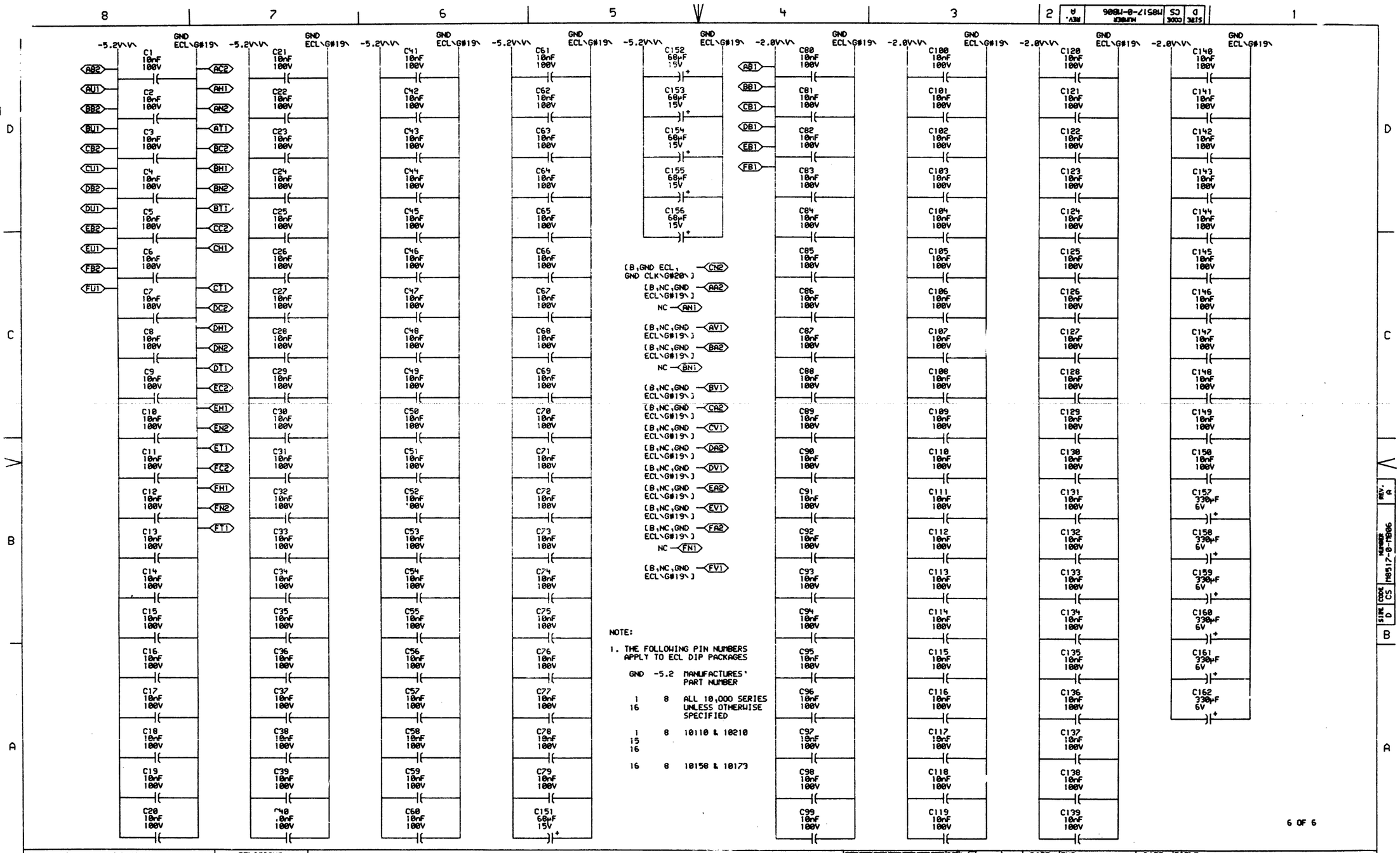

"THIS DRAWING AND SPECIFICATIONS, HEREIN, ARE THE PROPERTY OF DIGITAL EQUIPMENT CORPORATION AND SHALL NOT BE REPRODUCED OR COPIED OR USED IN WHOLE OR IN PART AS THE BASIS FOR THE MANUFACTURE OR SALE OF ITEMS WITHOUT WRITTEN PERMISSION.
COPYRIGHT © 1976, DIGITAL EQUIPMENT CORPORATION"

REVISIONS		
CHK	CHANGE NO.	REV
—	M8517-00001	A
H. Zimmerman 7-2-76		
T. EGGERS		

digital	DWN. T. Gormley	DATE 07-JUN-76	ENG. J.D. Allen DATE 7 Jul 76
M86EX.DRW[4,121]	24-MAY-76 10:08	DATE 6/24/76	BOARD LOCATION: SHEET 1 OF 1
FIRST USED ON OPTION/MODEL: KL10			NEXT HIGHER ASSEMBLY: B-DD-M8517-0

TITLE: MB BOARD POWER, GND, CAP

SIZE	CODE	NUMBER	REV.
D	CS	M8517-0-MB06	A

79 MR

RESISTOR LOC(PIN)	SHOWN ON DRW#	REF	VALUE	TERMINATES SIGNAL
R168(1)	MB04	B1	68Ω	%E11(1)
R165(1)	MB04	B1	68Ω	%E11(14)
R164(1)	MB04	B1	68Ω	%E11(15)
R169(1)	MB04	B1	68Ω	%E11(2)
R181(1)	MB04	C1	68Ω	%E31(1)
R178(1)	MB04	C1	68Ω	%E31(14)
R177(1)	MB04	C1	68Ω	%E31(15)
R180(1)	MB04	C1	68Ω	%E31(2)
R188(1)	MB04	D1	68Ω	%E70(1)
R190(1)	MB04	D1	68Ω	%E70(14)
R191(1)	MB04	D1	68Ω	%E70(15)
R189(1)	MB04	D1	68Ω	%E70(2)
R26(1)	MB03	C2	68Ω	-A H
R224(1)	MB01	D7	68Ω	AR [N+00] A H
R227(1)	MB01	D7	68Ω	AR [N+01] A H
R218(1)	MB01	C7	68Ω	AR [N+02] A H
R217(1)	MB01	C7	68Ω	AR [N+03] A H
R69(1)	MB01	B7	68Ω	AR [N+04] A H
R68(1)	MB01	B7	68Ω	AR [N+05] A H
R62(1)	MB01	D5	68Ω	AR [N+18] A H
R67(1)	MB01	D5	68Ω	AR [N+19] A H
R46(1)	MB01	C5	68Ω	AR [N+20] A H
R47(1)	MB01	C5	68Ω	AR [N+21] A H
R38(1)	MB01	B5	68Ω	AR [N+22] A H
R43(1)	MB01	B5	68Ω	AR [N+23] A H
R14(1)	MB03	B2	68Ω	-B H
R145(1)	MB04	D6	68Ω	CACHE DATA [N+00] A H
R136(1)	MB04	D6	68Ω	CACHE DATA [N+01] A H
R147(1)	MB04	C6	68Ω	CACHE DATA [N+02] A H
R144(1)	MB04	C6	68Ω	CACHE DATA [N+03] A H
R226(1)	MB04	B6	68Ω	CACHE DATA [N+04] A H
R222(1)	MB04	B6	68Ω	CACHE DATA [N+05] A H
R230(1)	MB04	D4	68Ω	CACHE DATA [N+18] A H
R229(1)	MB04	D4	68Ω	CACHE DATA [N+19] A H
R166(1)	MB04	C4	68Ω	CACHE DATA [N+20] A H
R104(1)	MB04	C4	68Ω	CACHE DATA [N+21] A H
R112(1)	MB04	B4	68Ω	CACHE DATA [N+22] A H
R167(1)	MB04	B4	68Ω	CACHE DATA [N+23] A H
R52(1)	MB05	D7	68Ω	CBUS D[N+00] RE H
R51(1)	MB05	D7	68Ω	CBUS D[N+01] RE H

RESISTOR LOC(PIN)	SHOWN ON DRW#	REF	VALUE	TERMINATES SIGNAL
R54(1)	MB05	D7	68Ω	CBUS D[N+02] RE H
R49(1)	MB05	D7	68Ω	CBUS D[N+03] RE H
R58(1)	MB05	C7	68Ω	CBUS D[N+04] RE H
R56(1)	MB05	C7	68Ω	CBUS D[N+05] RE H
R55(1)	MB05	C7	68Ω	CBUS D[N+18] RE H
R50(1)	MB05	C7	68Ω	CBUS D[N+19] RE H
R53(1)	MB05	B7	68Ω	CBUS D[N+20] RE H
R48(1)	MB05	B7	68Ω	CBUS D[N+21] RE H
R59(1)	MB05	B7	68Ω	CBUS D[N+22] RE H
R57(1)	MB05	B7	68Ω	CBUS D[N+23] RE H
R200(1)	MB01	A4	68Ω	CBUS OUT HOLD A H
R237(1)	MB04	D3	68Ω	CCW BUF [N+00] IN H
R236(1)	MB04	D3	68Ω	CCW BUF [N+01] IN H
R235(1)	MB04	D3	68Ω	CCW BUF [N+02] IN H
R234(1)	MB04	D3	68Ω	CCW BUF [N+03] IN H
R221(1)	MB04	C3	68Ω	CCW BUF [N+04] IN H
R220(1)	MB04	C3	68Ω	CCW BUF [N+05] IN H
R219(1)	MB04	C3	68Ω	CCW BUF [N+18] IN H
R216(1)	MB04	C3	68Ω	CCW BUF [N+19] IN H
R209(1)	MB04	B3	68Ω	CCW BUF [N+20] IN H
R208(1)	MB04	B3	68Ω	CCW BUF [N+21] IN H
R207(1)	MB04	B3	68Ω	CCW BUF [N+22] IN H
R206(1)	MB04	B3	68Ω	CCW BUF [N+23] IN H
R20(1)	MB05	D5	68Ω	CH BUF ADR 0 H
R8(1)	MB05	D5	68Ω	CH BUF ADR 0 A H
R21(1)	MB05	C5	68Ω	CH BUF ADR 1 H
R4(1)	MB05	C5	68Ω	CH BUF ADR 1 A H
R22(1)	MB05	C5	68Ω	CH BUF ADR 2 H
R3(1)	MB05	C5	68Ω	CH BUF ADR 2 A H
R32(1)	MB05	D4	68Ω	CH BUF ADR 3 H
R5(1)	MB05	D4	68Ω	CH BUF ADR 3 A H
R31(1)	MB05	C4	68Ω	CH BUF ADR 4 H
R7(1)	MB05	C4	68Ω	CH BUF ADR 4 A H
R33(1)	MB05	C4	68Ω	CH BUF ADR 5 H
R6(1)	MB05	C4	68Ω	CH BUF ADR 5 A H
R30(1)	MB05	D2	68Ω	CH BUF ADR 6 H
R17(1)	MB05	D2	68Ω	CH BUF ADR 6 A H
R27(1)	MB05	C2	68Ω	-CH BUF EN H
R15(1)	MB05	C2	68Ω	-CH BUF EN A H
R29(1)	MB03	D7	68Ω	CH BUF IN [N+00] H

RESISTOR LOC(PIN)	SHOWN ON DRW#	REF	VALUE	TERMINATES SIGNAL
R25(1)	MB03	D7	68Ω	CH BUF IN [N+01] H
R18(1)	MB03	D7	68Ω	CH BUF IN [N+02] H
R23(1)	MB03	D7	68Ω	CH BUF IN [N+03] H
R28(1)	MB03	C7	68Ω	CH BUF IN [N+04] H
R24(1)	MB03	C7	68Ω	CH BUF IN [N+05] H
R16(1)	MB03	C7	68Ω	CH BUF IN [N+18] H
R12(1)	MB03	C7	68Ω	CH BUF IN [N+19] H
R10(1)	MB03	B7	68Ω	CH BUF IN [N+20] H
R2(1)	MB03	B7	68Ω	CH BUF IN [N+21] H
R11(1)	MB03	B7	68Ω	CH BUF IN [N+22] H
R9(1)	MB03	B7	68Ω	CH BUF IN [N+23] H
R171(1)	MB03	A7	68Ω	CH BUF MB SEL H
R13(1)	MB03	B2	68Ω	-CH BUF WR [N/6+3] H
R19(1)	MB03	C2	68Ω	-CH BUF WR [N/6] H
R78(1)	MB03	D5	68Ω	CH BUF [N+00] H
R80(1)	MB03	D4	68Ω	CH BUF [N+01] H
R81(1)	MB03	D4	68Ω	CH BUF [N+02] H
R77(1)	MB03	D3	68Ω	CH BUF [N+03] H
R73(1)	MB03	D3	68Ω	CH BUF [N+04] H
R74(1)	MB03	D2	68Ω	CH BUF [N+05] H
R76(1)	MB03	B5	68Ω	CH BUF [N+18] H
R75(1)	MB03	B4	68Ω	CH BUF [N+19] H
R204(1)	MB03	B4	68Ω	CH BUF [N+20] H
R203(1)	MB03	B3	68Ω	CH BUF [N+21] H
R205(1)	MB03	B3	68Ω	CH BUF [N+22] H
R202(1)	MB03	B2	68Ω	CH BUF [N+23] H
R118(1)	MB05	C2	68Ω	CH REG HOLD H
R105(1)	MB05	D7	68Ω	CH REG [N+00] H
R106(1)	MB05	D7	68Ω	CH REG [N+01] H
R232(1)	MB05	D7	68Ω	CH REG [N+02] H
R233(1)	MB05	D7	68Ω	CH REG [N+03] H
R176(1)	MB05	C7	68Ω	CH REG [N+04] H
R175(1)	MB05	C7	68Ω	CH REG [N+05] H
R184(1)	MB05	C7	68Ω	CH REG [N+18] H
R182(1)	MB05	C7	68Ω	CH REG [N+19] H
R170(1)	MB05	B7	68Ω	CH REG [N+20] H
R172(1)	MB05	B7	68Ω	CH REG [N+21] H
R212(1)	MB05	B7	68Ω	CH REG [N+22] H
R211(1)	MB05	B7	68Ω	CH REG [N+23] H
R34(1)	MB04	A2	68Ω	CLK A H

RESISTOR LOC(PIN)	SHOWN ON DRW#	REF	VALUE	TERMINATES SIGNAL
R199(1)	MB04	A2	68Ω	CLK B H
R64(1)	MB04	A2	68Ω	CLK C H
R201(1)	MB04	A2	68Ω	CLK D H
R79(1)	MB04	A2	68Ω	CLK E H
R1(1)	MB04	A2	68Ω	CLK F H
R124(1)	MB04	A2	68Ω	CLK MB [N] H
R41(1)	MB05	A5	68Ω	-MB CH BUF LOAD H
R138(1)	MB05	C5	68Ω	MB CH BUF [N+00] H
R137(1)	MB05	B5	68Ω	MB CH BUF [N+01] H
R133(1)	MB05	B5	68Ω	MB CH BUF [N+02] H
R134(1)	MB05	B5	68Ω	MB CH BUF [N+03] H
R72(1)	MB05	C3	68Ω	MB CH BUF [N+04] H
R71(1)	MB05	B3	68Ω	MB CH BUF [N+05] H
R63(1)	MB05	B3	68Ω	MB CH BUF [N+18] H
R70(1)	MB05	B3	68Ω	MB CH BUF [N+19] H
R44(1)	MB05	C2	68Ω	MB CH BUF [N+20] H
R45(1)	MB05	B2	68Ω	MB CH BUF [N+21] H
R39(1)	MB05	B2	68Ω	MB CH BUF [N+22] H
R40(1)	MB05	B2	68Ω	MB CH BUF [N+23] H
R37(1)	MB04	A4	68Ω	-MB IN EN A H
R42(1)	MB04	A7	68Ω	MB IN SEL 1 A H
R109(1)	MB04	A6	68Ω	MB IN SEL 2 A H
R110(1)	MB04	A6	68Ω	MB IN SEL 4 A H
R99(1)	MB02	A3	68Ω	MB SEL 1 A H
R103(1)	MB02	A3	68Ω	MB SEL 2 A H
R149(1)	MB04	D6	68Ω	MB [N+00] IN H
R139(1)	MB04	D7	68Ω	MB [N+00] IN A H
R151(1)	MB04	D6	68Ω	MB [N+01] IN H
R140(1)	MB04	D7	68Ω	MB [N+01] IN A H
R153(1)	MB04	C6	68Ω	MB [N+02] IN H
R148(1)	MB04	D7	68Ω	MB [N+02] IN A H
R150(1)	MB04	C6	68Ω	MB [N+03] IN H
R146(1)	MB04	D7	68Ω	MB [N+03] IN A H
R60(1)	MB04	B6	68Ω	MB [N+04] IN H
R225(1)	MB04	C7	68Ω	MB [N+04] IN A H
R61(1)	MB04	B6	68Ω	MB [N+05] IN H
R223(1)	MB04	C7	68Ω	MB [N+05] IN A H
R65(1)	MB04	D4	68Ω	MB [N+18] IN H
R231(1)	MB04	C7	68Ω	MB [N+18] IN A H
R66(1)	MB04	D4	68Ω	MB [N+19] IN H

NOTE:

1. ALL TERMINATORS HAVE PIN TWO CONNECTED TO -2.0V AND ARE 5% 1/4WATT UNLESS OTHERWISE SPECIFIED
2. ENTRIES ARE SORTED BY SIGNAL NAME
3. % INDICATES OUTPUT OF DIP LOC AND
   () INDICATES PIN NUMBER

"THIS DRAWING AND SPECIFICATIONS, HEREIN, ARE THE PROPERTY OF DIGITAL EQUIPMENT CORPORATION AND SHALL NOT BE REPRODUCED OR COPIED OR USED IN WHOLE OR IN PART AS THE BASIS FOR THE MANUFACTURE OR SALE OF ITEMS WITHOUT WRITTEN PERMISSION.
COPYRIGHT © 1976, DIGITAL EQUIPMENT CORPORATION"

REVISIONS

CHK	CHANGE NO.	REV
—	M8517-00001	A
	T.SHERMAN 7-2-76	
	T.ROGERS	
	14 JUL 76	14 JUL 76

digital

DRN. C. Smith DATE 24-MAY-76
CHK. DATE 8/3/76
ENG. J.O. Allen DATE 7 JUN 76
BOARD LOCATION:
SHEET 1 OF 2
M8517.DRW[4,427] 24-MAY-76 18:19
NEXT HIGHER ASSEMBLY: B-DD-M8517-0
FIRST USED ON OPTION/MODEL: KL10

TITLE: MB BOARD TERMINATORS

SIZE	CODE	NUMBER	REV.
D	CS	M8517-0-RES	A

MR

80

RESISTOR LOC(PIN)	SHOWN ON DRW#	REF	VALUE	TERMINATES SIGNAL
R228(1)	MB04	C7	68Ω	MB [N+19] IN A H
R160(1)	MB04	C4	68Ω	MB [N+20] IN H
R108(1)	MB04	B7	68Ω	MB [N+20] IN A H
R159(1)	MB04	C4	68Ω	MB [N+21] IN H
R105(1)	MB04	B7	68Ω	MB [N+21] IN A H
P150(1)	MB04	B4	68Ω	MB [N+22] IN H
R114(1)	MB04	B7	68Ω	MB [N+22] IN A H
R163(1)	MB04	B4	68Ω	MB [N+23] IN H
R111(1)	MB04	B7	68Ω	MB [N+23] IN A H
R152(1)	MB02	A7	68Ω	MB0 HOLD H
R194(1)	MB02	D7	68Ω	MB0 [N+00] H
R196(1)	MB02	D7	68Ω	MB0 [N+01] H
R91(1)	MB02	D7	68Ω	MB0 [N+02] H
R88(1)	MB02	D7	68Ω	MB0 [N+03] H
R120(1)	MB02	C7	68Ω	MB0 [N+04] H
R117(1)	MB02	C7	68Ω	MB0 [N+05] H
R129(1)	MB02	C7	68Ω	MB0 [N+10] H
R126(1)	MB02	C7	68Ω	MB0 [N+19] H
R101(1)	MB02	B7	68Ω	MB0 [N+20] H
R35(1)	MB02	B7	68Ω	MB0 [N+21] H
R95(1)	MB02	B7	68Ω	MB0 [N+22] H
R92(1)	MB02	B7	68Ω	MB0 [N+23] H
R238(1)	MB04	A4	68Ω	-MB04 CCW BUF WR H
R154(1)	MB02	A7	68Ω	MB1 HOLD H
R195(1)	MB02	D6	68Ω	MB1 [N+00] H
R193(1)	MB02	D6	68Ω	MB1 [N+01] H
R90(1)	MB02	D6	68Ω	MB1 [N+02] H
R89(1)	MB02	D6	68Ω	MB1 [N+03] H
R122(1)	MB02	C6	68Ω	MB1 [N+04] H
R116(1)	MB02	C6	68Ω	MB1 [N+05] H
R131(1)	MB02	C6	68Ω	MB1 [N+10] H
R127(1)	MB02	C6	68Ω	MB1 [N+19] H
R102(1)	MB02	B6	68Ω	MB1 [N+20] H
R36(1)	MB02	B6	68Ω	MB1 [N+21] H
R96(1)	MB02	B6	68Ω	MB1 [N+22] H
R93(1)	MB02	B6	68Ω	MB1 [N+23] H
R82(1)	MB02	A5	68Ω	MB2 HOLD H
R197(1)	MB02	D5	68Ω	MB2 [N+00] H
R187(1)	MB02	D5	68Ω	MB2 [N+01] H
R86(1)	MB02	D5	68Ω	MB2 [N+02] H

RESISTOR LOC(PIN)	SHOWN ON DRW#	REF	VALUE	TERMINATES SIGNAL
R84(1)	MB02	D5	68Ω	MB2 [N+03] H
R121(1)	MB02	C5	68Ω	MB2 [N+04] H
R119(1)	MB02	C5	68Ω	MB2 [N+05] H
R130(1)	MB02	C5	68Ω	MB2 [N+10] H
R125(1)	MB02	C5	68Ω	MB2 [N+19] H
R162(1)	MB02	B5	68Ω	MB2 [N+20] H
R94(1)	MB02	B5	68Ω	MB2 [N+21] H
R156(1)	MB02	B5	68Ω	MB2 [N+22] H
R155(1)	MB02	B5	68Ω	MB2 [N+23] H
R83(1)	MB02	A5	68Ω	MB3 HOLD H
R190(1)	MB02	D4	68Ω	MB3 [N+00] H
R192(1)	MB02	D4	68Ω	MB3 [N+01] H
R85(1)	MB02	D4	68Ω	MB3 [N+02] H
R87(1)	MB02	D4	68Ω	MB3 [N+03] H
R123(1)	MB02	C4	68Ω	MB3 [N+04] H
R115(1)	MB02	C4	68Ω	MB3 [N+05] H
R132(1)	MB02	C4	68Ω	MB3 [N+10] H
R128(1)	MB02	C4	68Ω	MB3 [N+19] H
R161(1)	MB02	B4	68Ω	MB3 [N+20] H
R157(1)	MB02	B4	68Ω	MB3 [N+21] H
R98(1)	MB02	B4	68Ω	MB3 [N+22] H
R97(1)	MB02	B4	68Ω	MB3 [N+23] H
R143(1)	MB01	D7	68Ω	MEM DATA IN [N+00] H
R135(1)	MB01	D7	68Ω	MEM DATA IN [N+01] H
R142(1)	MB01	C7	68Ω	MEM DATA IN [N+02] H
R141(1)	MB01	C7	68Ω	MEM DATA IN [N+03] H
R173(1)	MB01	B7	68Ω	MEM DATA IN [N+04] H
R174(1)	MB01	B7	68Ω	MEM DATA IN [N+05] H
R183(1)	MB01	D5	68Ω	MEM DATA IN [N+10] H
R179(1)	MB01	D5	68Ω	MEM DATA IN [N+19] H
R187(1)	MB01	C5	68Ω	MEM DATA IN [N+20] H
R100(1)	MB01	C5	68Ω	MEM DATA IN [N+21] H
R113(1)	MB01	B5	68Ω	MEM DATA IN [N+22] H
R106(1)	MB01	B5	68Ω	MEM DATA IN [N+23] H
R213(1)	MB01	A7	68Ω	-MEM TO C EN A H
R214(1)	MB01	A5	68Ω	MEM TO C SEL 1 A H
R210(1)	MB01	A7	68Ω	MEM TO C SEL 2 A H
R215(1)	MB01	A2	68Ω	PT IN SEL AR H

NOTE:

1. ALL TERMINATORS HAVE PIN TWO CONNECTED TO -2.0V AND ARE 5% 1/4WATT UNLESS OTHERWISE SPECIFIED
2. ENTRIES ARE SORTED BY SIGNAL NAME
3. % INDICATES OUTPUT OF DIP LOC AND
   ( ) INDICATES PIN NUMBER

"THIS DRAWING AND SPECIFICATIONS, HEREIN, ARE THE PROPERTY OF DIGITAL EQUIPMENT CORPORATION AND SHALL NOT BE REPRODUCED OR COPIED OR USED IN WHOLE OR IN PART AS THE BASIS FOR THE MANUFACTURE OR SALE OF ITEMS WITHOUT WRITTEN PERMISSION.
COPYRIGHT © 1976, DIGITAL EQUIPMENT CORPORATION"

REVISIONS

CHK	CHANGE NO.	REV

digital

M8517Z.DPWC4,427] 24-MAY-76 18:19

DRN. C Smith DATE 24-MAY-76
CHK'D E Stephenson DATE 6/8/76
ENG. J.D. Allen DATE 8 Jun 76
BOARD LOCATION:
SHEET 2 OF 2
NEXT HIGHER ASSEMBLY:
FIRST USED ON OPTION/MODEL: KL10 B-DD-M8517-0

TITLE: MB BOARD TERMINATORS

SIZE	CODE	NUMBER	REV.
D	CS	M8517-0-RES	A

MR

81

SIZE	CODE	NUMBER	REV.
B	DD	M8518-YA	

DRAWING NO.	NO. OF SHTS	PART NO.	DESCRIPTION	REVISIONS
			MODULE REVISION	A
D-UA-M8518-YA-Ø	5		PHYSICAL MEMORY ADDRESS	-
D-CS-M8518-YA-PMA1	1		EBR & UBR REG UEBR MIX & VA BUF	-
D-CS-M8518-YA-PMA2	1		CACHE CLEARER ADR CTR	-
D-CS-M8518-YA-PMA3	1		PHY ADR MIX PA 14-31	-
D-CS-M8518-YA-PMA4	1		ERA REG,ADR PAR,PA 32-35 MIX	-
D-CS-M8518-YA-PMA5	1		PHY MEM ADR CONTROL LOGIC	-
D-CS-M8518-YA-PMA6	1		PHYSICAL MEM ADR POWER,GND,CAP	-
D-CS-M8518-YA-RES	1		PHYSICAL MEM ADR TERMINATORS	-
D-AH-M8518-Ø-Ø	4		PHYSICAL MEMORY ADDRESS	B
		5010635	ETCHED CIRCUIT BOARD	C
M8518-Ø-L			P.C. DESIGN DATA BASE	REF
M8518- Ø-PL			INSERTION P/L DATA BASE	REF
POO-M8518-YA			PROCESS SHEET	REF

NOTES:

REVISIONS	REV.	CHG NO.	DATE

"THIS DRAWING AND SPECIFICATIONS, HEREIN, ARE THE PROPERTY OF DIGITAL EQUIPMENT CORPORATION AND SHALL NOT BE REPRODUCED OR COPIED OR USED IN WHOLE OR IN PART AS THE BASIS FOR THE MANUFACTURE OR SALE OF ITEMS WITHOUT WRITTEN PERMISSION.
COPYRIGHT © 1976, DIGITAL EQUIPMENT CORPORATION"

digital

USED ON OPTION/MODEL
KL1Ø-DA
KL1Ø-DB
KL1Ø-EA
KL1Ø-EB
KL1Ø-PV

DRN.	M. Pasarelli	20OCT76
CHK'D	R.W. Lawrence	20OCT76
ENG.	J. P. Allen	25 JAN77
PROD.	W. Finley	25JAN77

TITLE
PHYSICAL MEMORY ADDRESS

SIZE	CODE	NUMBER	REV.
B	DD	M8518-YA	

SHEET 1 OF 1

DRB T26 EN-01149-16-N176(325)

MR

82

DRAWING AND SPECIFICATIONS HEREIN ARE THE PROPERTY OF DIGITAL EQUIPMENT CORPORATION AND SHALL NOT BE REPRODUCED OR COPIED OR USED IN WHOLE OR IN PART AS THE BASIS FOR THE MANUFACTURE OR SALE OF EQUIPMENT WITHOUT WRITTEN PERMISSION. COPYRIGHT © 1976 DIGITAL EQUIPMENT CORPORATION

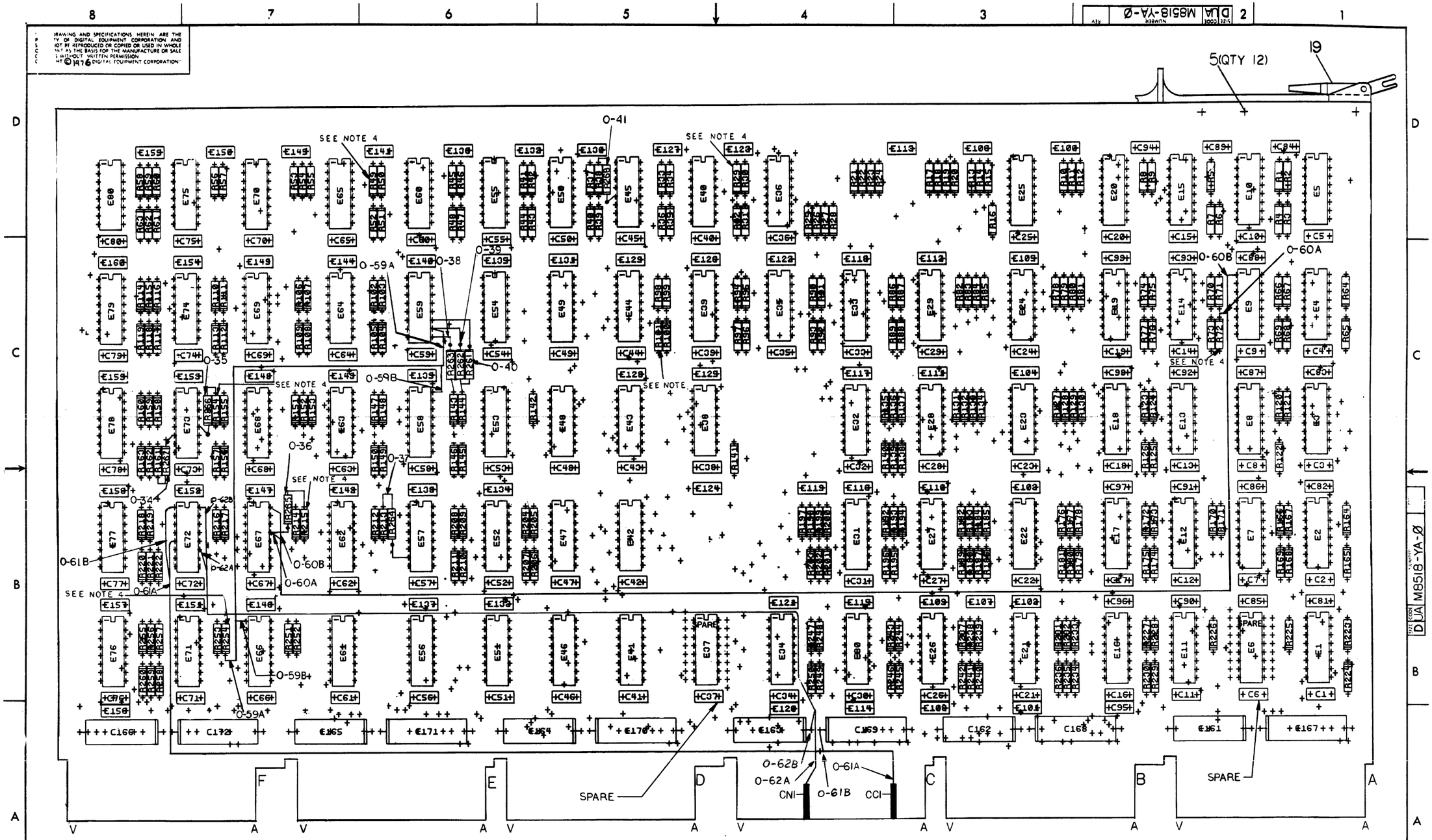

REVISIONS		
CHK	CHANGE NO	REV

TITLE	SIZE	CODE	NUMBER	REV
PHYSICAL MEMORY ADDRESS	D	UA	M8518-YA-Ø	
SCALE NONE	SHEET 2 OF 6	DIST.		

MR

83

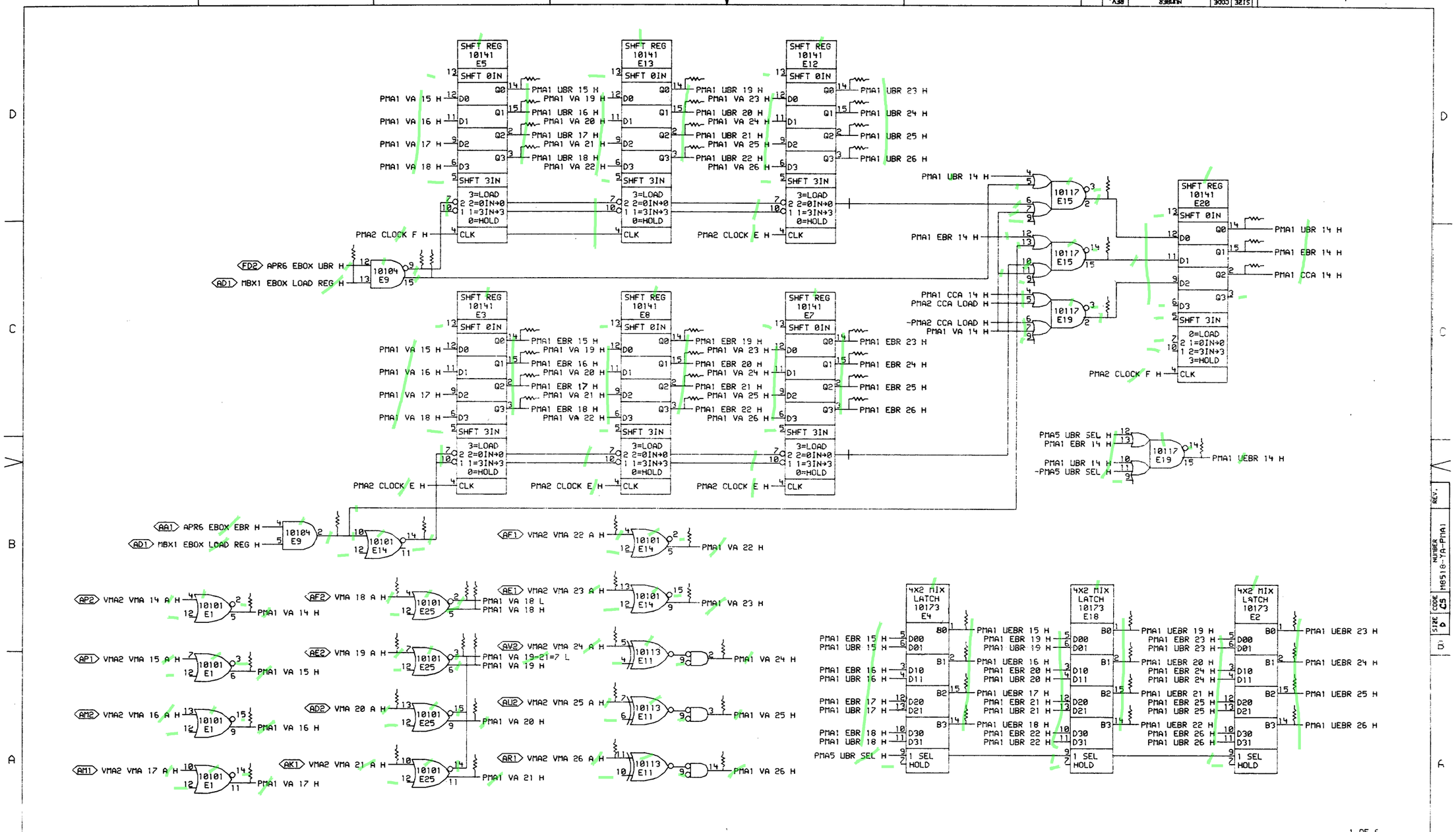

"THIS DRAWING AND SPECIFICATIONS, HEREIN, ARE THE PROPERTY OF DIGITAL EQUIPMENT CORPORATION AND SHALL NOT BE REPRODUCED OR COPIED OR USED IN WHOLE OR IN PART AS THE BASIS FOR THE MANUFACTURE OR SALE OF ITEMS WITHOUT WRITTEN PERMISSION.
COPYRIGHT © 1977, DIGITAL EQUIPMENT CORPORATION"

REVISIONS		
CHK	CHANGE NO.	REV

digital

DRN. B. Toosky DATE 12-JAN-77 ENG. J. L. Allen DATE 19 JAN 77
CHK'D. J. L. Allen DATE 19 JAN 77 BOARD LOCATION: 4AF29 SHEET 1 OF 1
PMA1EF.DRW[4,546] 17-JAN-77 09:58 NEXT HIGHER ASSEMBLY: B-DD-M8518-YA
FIRST USED ON OPTION/MODEL: KL10PV

TITLE: EBR & UBR REG
UEBR MIX & VA BUF

SIZE	CODE	NUMBER	REV.
D	CS	M8518-YA-PMA1	

MR

84

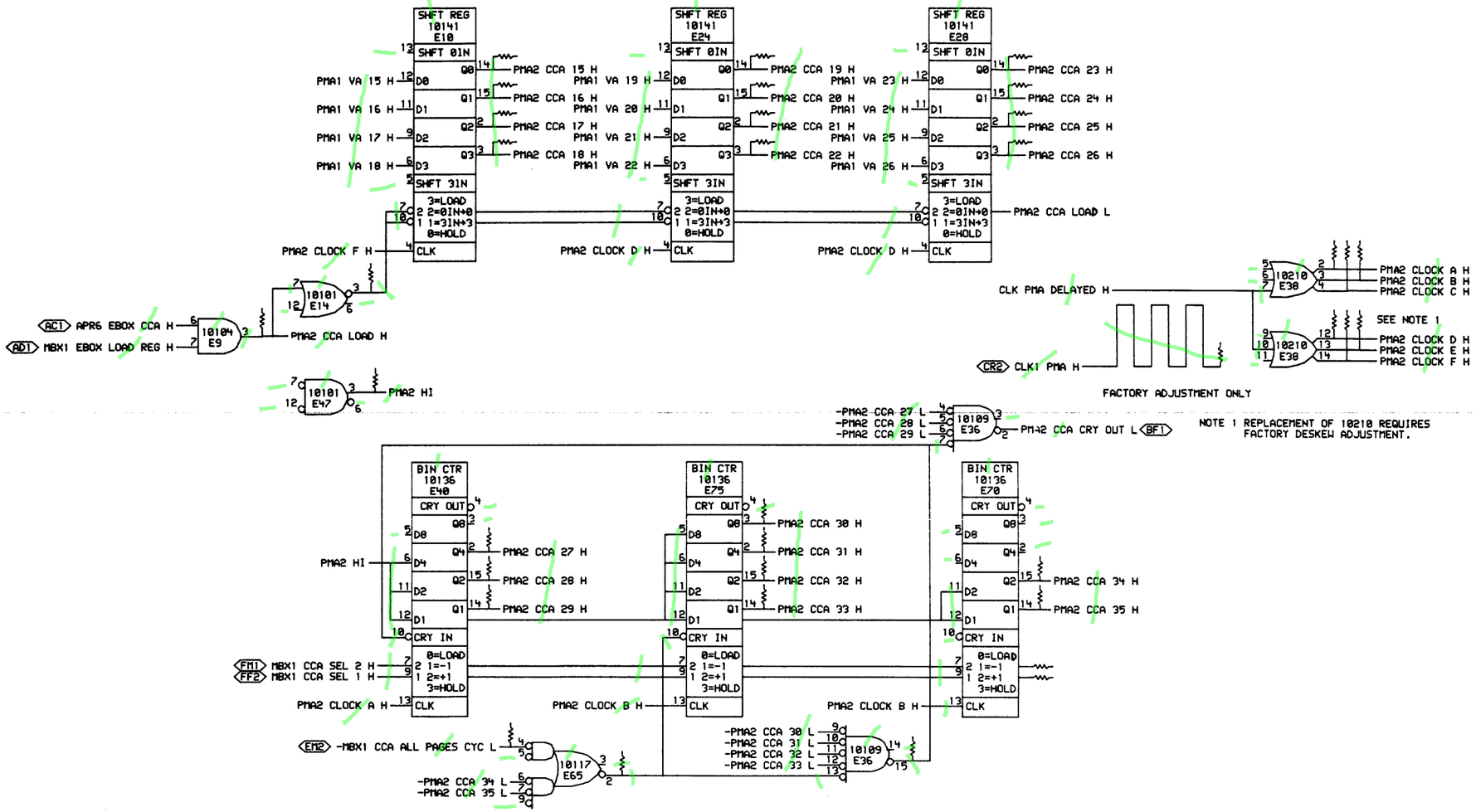

2 OF 6

"THIS DRAWING AND SPECIFICATIONS, HEREIN, ARE THE PROPERTY OF DIGITAL EQUIPMENT CORPORATION AND SHALL NOT BE REPRODUCED OR COPIED OR USED IN WHOLE OR IN PART AS THE BASIS FOR THE MANUFACTURE OR SALE OF ITEMS WITHOUT WRITTEN PERMISSION. COPYRIGHT © 1976, DIGITAL EQUIPMENT CORPORATION"

REVISIONS		
CHK	CHANGE NO.	REV

digital	DRN. J. Lacosky	DATE 09-SEP-76	ENG. J.O. Allen	DATE 19 Jan 77
	CHK'D M. Stephenson	DATE 9/22/76	BOARD LOCATION: 4AF29	
PMA2EF.DRW[4,175]	07-SEP-76 13:15		NEXT HIGHER ASSEMBLY:	SHEET 1 OF 1
FIR T USED ON OPTION/MODEL: KL10PV			B-DD-M8518-YA	

TITLE: CACHE CLEARER ADR CTR

SIZE	CODE	NUMBER	REV.
D	CS	M8518-YA-PMA2	

85

1 MR

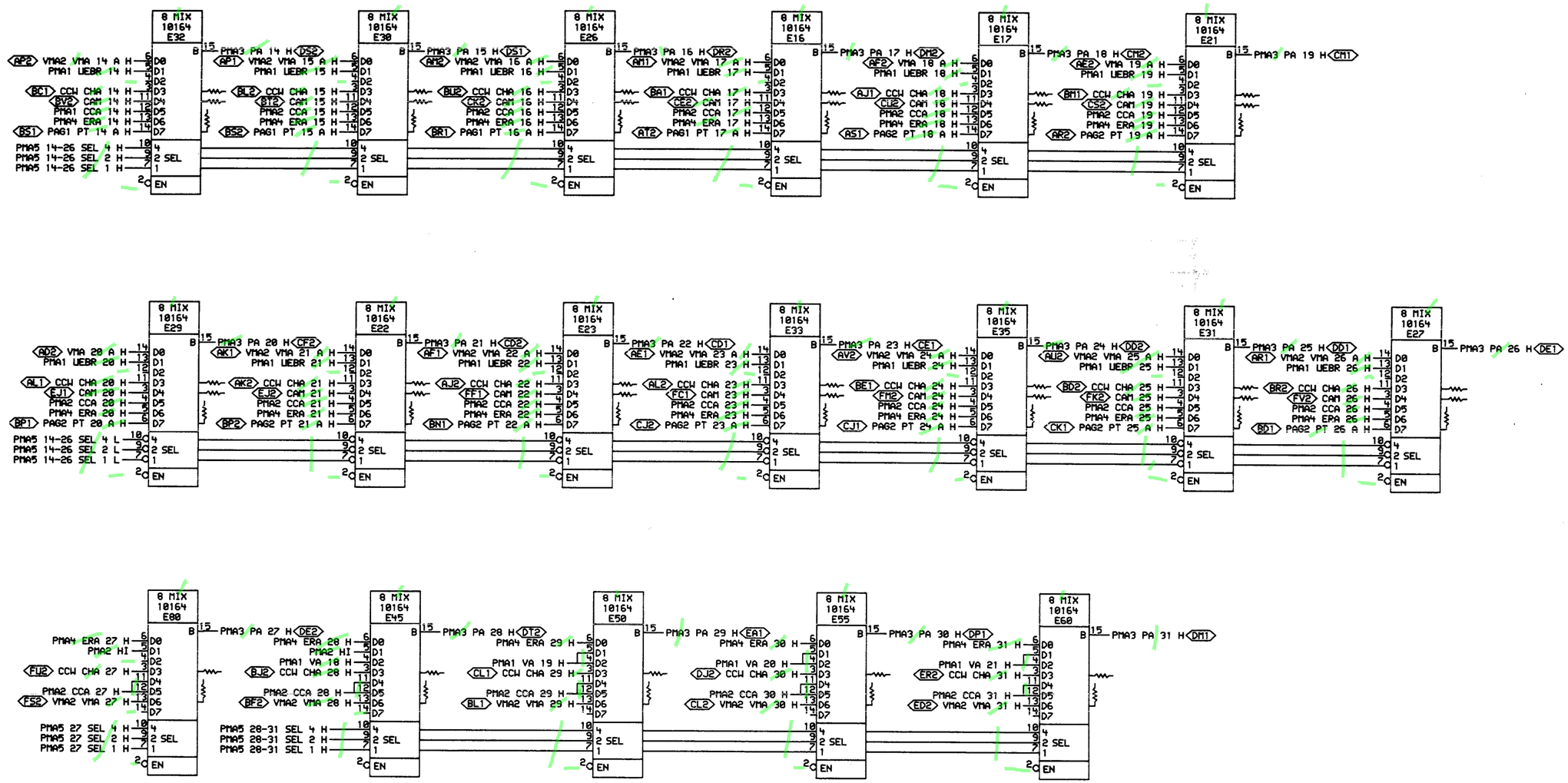

3 OF 6

"THIS DRAWING AND SPECIFICATIONS, HEREIN, ARE THE PROPERTY OF DIGITAL EQUIPMENT CORPORATION AND SHALL NOT BE REPRODUCED OR COPIED OR USED IN WHOLE OR IN PART AS THE BASIS FOR THE MANUFACTURE OR SALE OF ITEMS WITHOUT WRITTEN PERMISSION. COPYRIGHT © 1976, DIGITAL EQUIPMENT CORPORATION"

REVISIONS		
CHK	CHANGE NO.	REV

digital

DSN: DATE 13-SEP-76 ENG. DATE 18 Jan 77
CHK: DATE 7/27/77
PMA3EF.DRW(4,175) 10-SEP-76 18:13
BOARD LOCATION: 4AF23
SHEET 1 OF 1
NEXT HIGHER ASSEMBLY: B-DD-M8518-YA
FIRST USED ON OPTION/MODEL: KL10PV

TITLE: PHY ADR MIX PA 14-31

SIZE	CODE	NUMBER	REV.
D	CS	M8518-YA-PMA3	

1 MR

86

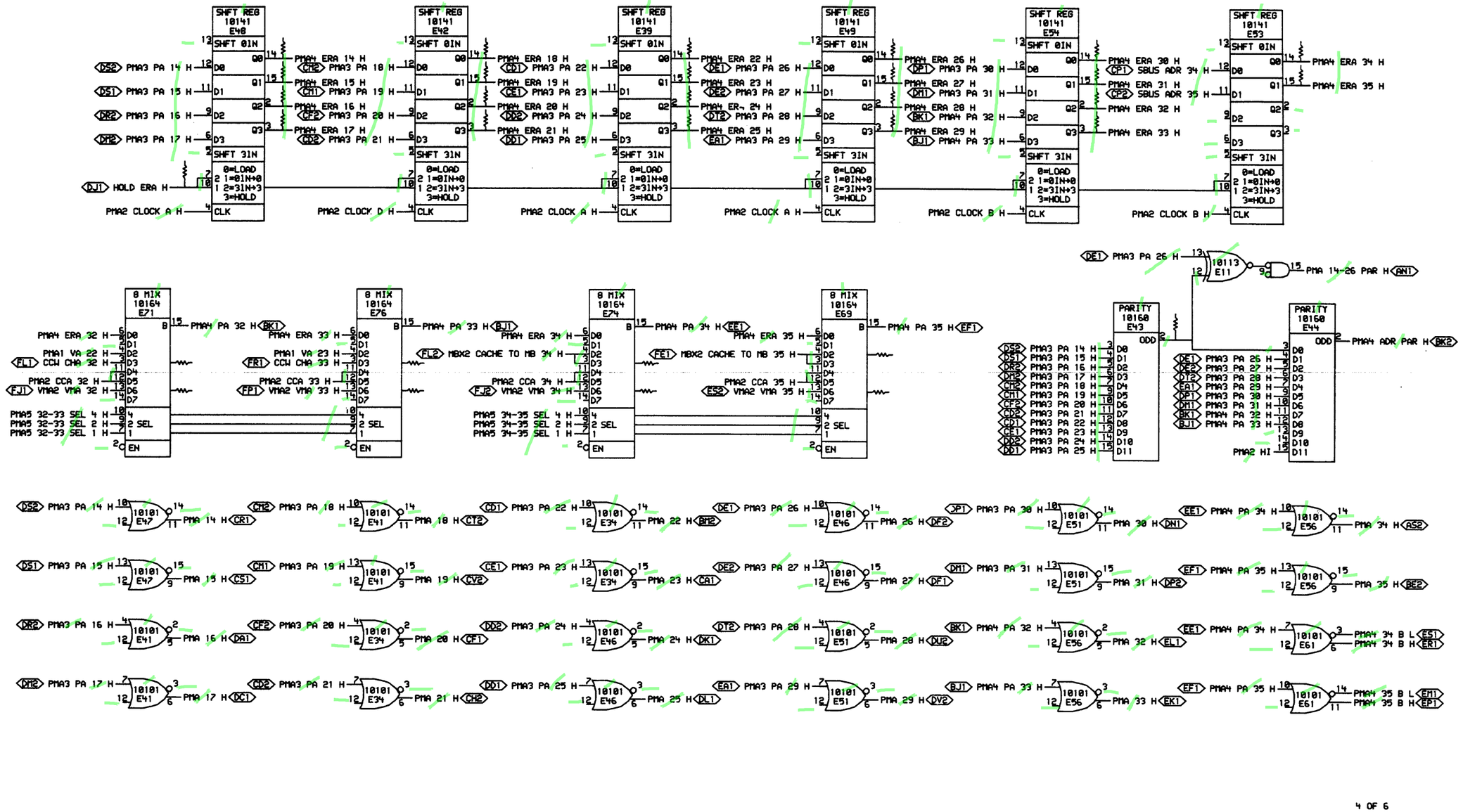

"THIS DRAWING AND SPECIFICATIONS, HEREIN, ARE THE PROPERTY OF DIGITAL EQUIPMENT CORPORATION AND SHALL NOT BE REPRODUCED OR COPIED OR USED IN WHOLE OR IN PART AS THE BASIS FOR THE MANUFACTURE OR SALE OF ITEMS WITHOUT WRITTEN PERMISSION.
"COPYRIGHT © 1976, DIGITAL EQUIPMENT CORPORATION"

REVISIONS		
CHK	CHANGE NO.	REV

digital

DRW. DATE 09-SEP-76 ENG. DATE 18 Oct 79
CHK'D 9/12/76 BOARD LOCATION: 4AF23
PMA4EF.DRW[4,1753] 07-SEP-76 13:20 SHEET 1 OF 1
NEXT HIGHER ASSEMBLY: B-DD-M8518-YA
FIRST USED ON OPTION/MODEL: KL10PV

TITLE: ERA REG, ADR PAR, PA 32-35 MIX

SIZE	CODE	NUMBER	REV.
D	CS	M8518-YA-PMA4	

87

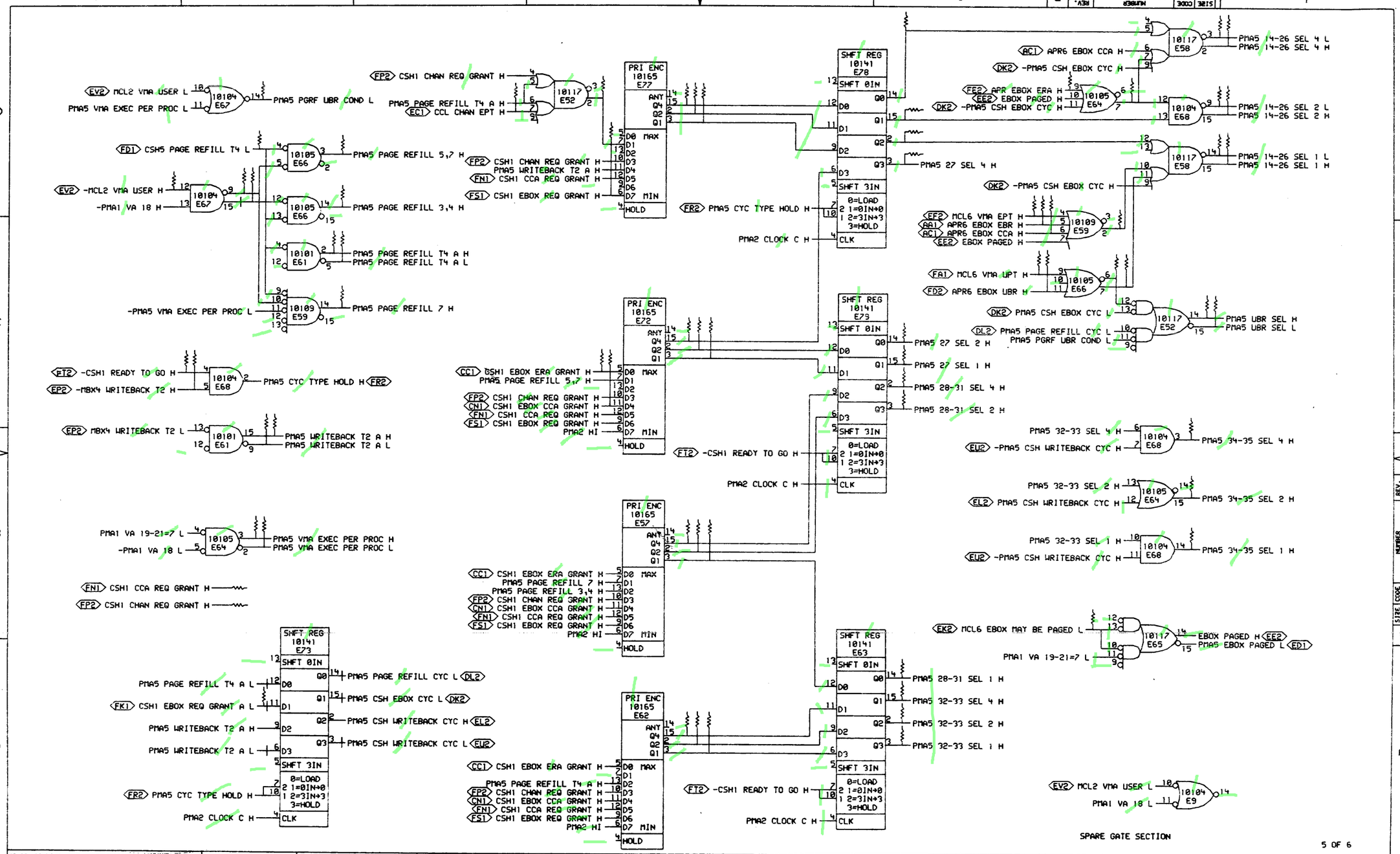
EV2 MCL2 VMA USER L
PMA5 VMA EXEC PER PROC L
10104 E67
PMA5 PGRF UBR COND L
FD1 CSH5 PAGE REFILL T4 L
10105 E66
PMA5 PAGE REFILL 5,7 H
EV2 -MCL2 VMA USER H
-PMA1 VA 18 H
10104 E67
10105 E66
PMA5 PAGE REFILL 3,4 H
10101 E61
PMA5 PAGE REFILL T4 A H
PMA5 PAGE REFILL T4 A L
-PMA5 VMA EXEC PER PROC L
10109 E59
PMA5 PAGE REFILL 7 H
FT2 -CSH1 READY TO GO H
EP2 -MBX4 WRITEBACK T2 H
10104 E68
PMA5 CYC TYPE HOLD H FR2
EP2 MBX4 WRITEBACK T2 L
10101 E61
PMA5 WRITEBACK T2 A H
PMA5 WRITEBACK T2 A L
PMA1 VA 19-21=7 L
-PMA1 VA 18 L
10105 E64
PMA5 VMA EXEC PER PROC H
PMA5 VMA EXEC PER PROC L
FN1 CSH1 CCA REQ GRANT H
FP2 CSH1 CHAN REQ GRANT H
FP2 CSH1 CHAN REQ GRANT H
EC1 CCL CHAN EPT H
10117 E52
PRI ENC 10165 E77
ANY
Q4
Q2
Q1
D0 MAX
D1
D2
D3
D4
D5
D6
D7 MIN
HOLD
FP2 CSH1 CHAN REQ GRANT H
PMA5 WRITEBACK T2 A H
FN1 CSH1 CCA REQ GRANT H
FS1 CSH1 EBOX REQ GRANT H
PRI ENC 10165 E72
CC1 CSH1 EBOX ERA GRANT H
PMA5 PAGE REFILL 5,7 H
FP2 CSH1 CHAN REQ GRANT H
CN1 CSH1 EBOX CCA GRANT H
FN1 CSH1 CCA REQ GRANT H
FS1 CSH1 EBOX REQ GRANT H
PMA2 HI
PRI ENC 10165 E57
CC1 CSH1 EBOX ERA GRANT H
PMA5 PAGE REFILL 7 H
PMA5 PAGE REFILL 3,4 H
FP2 CSH1 CHAN REQ GRANT H
CN1 CSH1 EBOX CCA GRANT H
FN1 CSH1 CCA REQ GRANT H
FS1 CSH1 EBOX REQ GRANT H
PMA2 HI
PRI ENC 10165 E62
CC1 CSH1 EBOX ERA GRANT H
PMA5 PAGE REFILL T4 A H
FP2 CSH1 CHAN REQ GRANT H
CN1 CSH1 EBOX CCA GRANT H
FN1 CSH1 CCA REQ GRANT H
FS1 CSH1 EBOX REQ GRANT H
PMA2 HI
SHFT REG 10141 E78
SHFT 0IN
Q0
D0
Q1
D1
Q2
D2
Q3
D3
SHFT 3IN
0=LOAD
2 1=0IN+0
1 2=3IN+3
3=HOLD
CLK
PMA5 27 SEL 4 H
FR2 PMA5 CYC TYPE HOLD H
PMA2 CLOCK C H
SHFT REG 10141 E79
PMA5 27 SEL 2 H
PMA5 27 SEL 1 H
PMA5 28-31 SEL 4 H
PMA5 28-31 SEL 2 H
FT2 -CSH1 READY TO GO H
PMA2 CLOCK C H
SHFT REG 10141 E73
PMA5 PAGE REFILL T4 A L
FK1 CSH1 EBOX REQ GRANT A L
PMA5 WRITEBACK T2 A H
PMA5 WRITEBACK T2 A L
FR2 PMA5 CYC TYPE HOLD H
PMA2 CLOCK C H
PMA5 PAGE REFILL CYC L DL2
PMA5 CSH EBOX CYC L DK2
PMA5 CSH WRITEBACK CYC H EL2
PMA5 CSH WRITEBACK CYC L EU2
SHFT REG 10141 E63
PMA5 28-31 SEL 1 H
PMA5 32-33 SEL 4 H
PMA5 32-33 SEL 2 H
PMA5 32-33 SEL 1 H
FT2 -CSH1 READY TO GO H
PMA2 CLOCK C H
AC1 APR6 EBOX CCA H
DK2 -PMA5 CSH EBOX CYC H
10117 E58
PMA5 14-26 SEL 4 L
PMA5 14-26 SEL 4 H
FE2 APR EBOX ERA H
EE2 EBOX PAGED H
DK2 -PMA5 CSH EBOX CYC H
10105 E64
10104 E68
PMA5 14-26 SEL 2 L
PMA5 14-26 SEL 2 H
10117 E58
PMA5 14-26 SEL 1 L
PMA5 14-26 SEL 1 H
DK2 -PMA5 CSH EBOX CYC H
EF2 MCL6 VMA EPT H
AA1 APR6 EBOX EBR H
AC1 APR6 EBOX CCA H
EE2 EBOX PAGED H
10109 E59
FA1 MCL6 VMA UPT H
FD2 APR6 EBOX UBR H
10105 E66
DK2 PMA5 CSH EBOX CYC L
DL2 PMA5 PAGE REFILL CYC L
PMA5 PGRF UBR COND L
10117 E52
PMA5 UBR SEL H
PMA5 UBR SEL L
PMA5 32-33 SEL 4 H
EU2 -PMA5 CSH WRITEBACK CYC H
10104 E68
PMA5 34-35 SEL 4 H
PMA5 32-33 SEL 2 H
EL2 PMA5 CSH WRITEBACK CYC H
10105 E64
PMA5 34-35 SEL 2 H
PMA5 32-33 SEL 1 H
EU2 -PMA5 CSH WRITEBACK CYC H
10104 E68
PMA5 34-35 SEL 1 H
EK2 MCL6 EBOX MAY BE PAGED L
PMA1 VA 19-21=7 L
10117 E65
EBOX PAGED H EE2
PMA5 EBOX PAGED L ED1
EV2 MCL2 VMA USER L
PMA1 VA 18 L
10104 E9
SPARE GATE SECTION
5 OF 6
"THIS DRAWING AND SPECIFICATIONS, HEREIN, ARE THE PROPERTY OF DIGITAL EQUIPMENT CORPORATION AND SHALL NOT BE REPRODUCED OR COPIED OR USED IN WHOLE OR IN PART AS THE BASIS FOR THE MANUFACTURE OR SALE OF ITEMS WITHOUT WRITTEN PERMISSION. COPYRIGHT © 1977, DIGITAL EQUIPMENT CORPORATION"
REVISIONS
CHK CHANGE NO. REV
digital
DRN 17-JAN-77
CHK 19 JAN 77
ENG 19 JAN 77
DATE
BOARD LOCATION: 4AF29
SHEET 1 OF 1
PMASEF.DRU[4,546] 17-JAN-77 10:04
NEXT HIGHER ASSEMBLY: B-DD-M8518-YA
FIRST USED ON OPTION/MODEL: KL10PV
TITLE: PHY MEM ADR CONTROL LOGIC
SIZE D
CODE CS
NUMBER M8518-YA-PMA5
REV.
1 MR
88

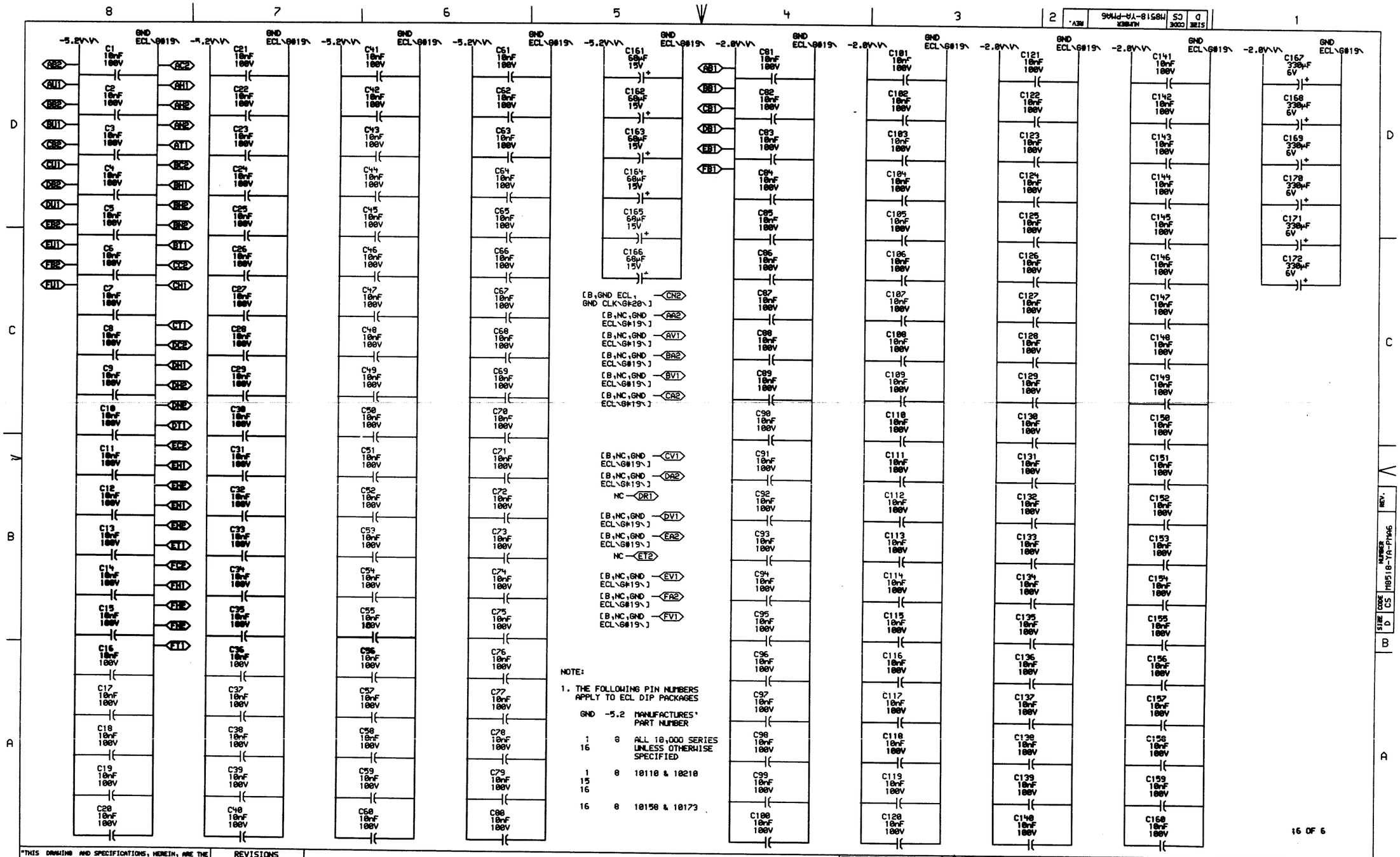
-5.2V\\
GND ECL\G#19\
-2.0V\\
C1 10nF 100V
C2 10nF 100V
C3 10nF 100V
C4 10nF 100V
C5 10nF 100V
C6 10nF 100V
C7 10nF 100V
C8 10nF 100V
C9 10nF 100V
C10 10nF 100V
C11 10nF 100V
C12 10nF 100V
C13 10nF 100V
C14 10nF 100V
C15 10nF 100V
C16 10nF 100V
C17 10nF 100V
C18 10nF 100V
C19 10nF 100V
C20 10nF 100V
C21 10nF 100V
C22 10nF 100V
C23 10nF 100V
C24 10nF 100V
C25 10nF 100V
C26 10nF 100V
C27 10nF 100V
C28 10nF 100V
C29 10nF 100V
C30 10nF 100V
C31 10nF 100V
C32 10nF 100V
C33 10nF 100V
C34 10nF 100V
C35 10nF 100V
C36 10nF 100V
C37 10nF 100V
C38 10nF 100V
C39 10nF 100V
C40 10nF 100V
C41 10nF 100V
C42 10nF 100V
C43 10nF 100V
C44 10nF 100V
C45 10nF 100V
C46 10nF 100V
C47 10nF 100V
C48 10nF 100V
C49 10nF 100V
C50 10nF 100V
C51 10nF 100V
C52 10nF 100V
C53 10nF 100V
C54 10nF 100V
C55 10nF 100V
C56 10nF 100V
C57 10nF 100V
C58 10nF 100V
C59 10nF 100V
C60 10nF 100V
C61 10nF 100V
C62 10nF 100V
C63 10nF 100V
C64 10nF 100V
C65 10nF 100V
C66 10nF 100V
C67 10nF 100V
C68 10nF 100V
C69 10nF 100V
C70 10nF 100V
C71 10nF 100V
C72 10nF 100V
C73 10nF 100V
C74 10nF 100V
C75 10nF 100V
C76 10nF 100V
C77 10nF 100V
C78 10nF 100V
C79 10nF 100V
C80 10nF 100V
C161 68µF 15V
C162 68µF 15V
C163 68µF 15V
C164 68µF 15V
C165 68µF 15V
C166 68µF 15V
C81 10nF 100V
C82 10nF 100V
C83 10nF 100V
C84 10nF 100V
C85 10nF 100V
C86 10nF 100V
C87 10nF 100V
C88 10nF 100V
C89 10nF 100V
C90 10nF 100V
C91 10nF 100V
C92 10nF 100V
C93 10nF 100V
C94 10nF 100V
C95 10nF 100V
C96 10nF 100V
C97 10nF 100V
C98 10nF 100V
C99 10nF 100V
C100 10nF 100V
C101 10nF 100V
C102 10nF 100V
C103 10nF 100V
C104 10nF 100V
C105 10nF 100V
C106 10nF 100V
C107 10nF 100V
C108 10nF 100V
C109 10nF 100V
C110 10nF 100V
C111 10nF 100V
C112 10nF 100V
C113 10nF 100V
C114 10nF 100V
C115 10nF 100V
C116 10nF 100V
C117 10nF 100V
C118 10nF 100V
C119 10nF 100V
C120 10nF 100V
C121 10nF 100V
C122 10nF 100V
C123 10nF 100V
C124 10nF 100V
C125 10nF 100V
C126 10nF 100V
C127 10nF 100V
C128 10nF 100V
C129 10nF 100V
C130 10nF 100V
C131 10nF 100V
C132 10nF 100V
C133 10nF 100V
C134 10nF 100V
C135 10nF 100V
C136 10nF 100V
C137 10nF 100V
C138 10nF 100V
C139 10nF 100V
C140 10nF 100V
C141 10nF 100V
C142 10nF 100V
C143 10nF 100V
C144 10nF 100V
C145 10nF 100V
C146 10nF 100V
C147 10nF 100V
C148 10nF 100V
C149 10nF 100V
C150 10nF 100V
C151 10nF 100V
C152 10nF 100V
C153 10nF 100V
C154 10nF 100V
C155 10nF 100V
C156 10nF 100V
C157 10nF 100V
C158 10nF 100V
C159 10nF 100V
C160 10nF 100V
C167 330µF 6V
C168 330µF 6V
C169 330µF 6V
C170 330µF 6V
C171 330µF 6V
C172 330µF 6V
AB2
AU1
BB2
BU1
CB2
CU1
DB2
DU1
EB2
EU1
FB2
FU1
AC2
AH1
AH2
AN2
AT1
BC2
BH1
BH2
BN2
BT1
CC2
CH1
CT1
DC2
DH1
DH2
DN2
DT1
EC2
EH1
EH2
ET1
FC2
FH1
FH2
FN2
FT1
AB1
BB1
CB1
DB1
EB1
FB1
[B,GND ECL, GND CLK\G#20\] CN2
[B,NC,GND ECL\G#19\] AA2
[B,NC,GND ECL\G#19\] AV1
[B,NC,GND ECL\G#19\] BA2
[B,NC,GND ECL\G#19\] BV1
[B,NC,GND ECL\G#19\] CA2
[B,NC,GND ECL\G#19\] CV1
[B,NC,GND ECL\G#19\] DA2
NC DR1
[B,NC,GND ECL\G#19\] DV1
[B,NC,GND ECL\G#19\] EA2
NC ET2
[B,NC,GND ECL\G#19\] EV1
[B,NC,GND ECL\G#19\] FA2
[B,NC,GND ECL\G#19\] FV1
NOTE:
1. THE FOLLOWING PIN NUMBERS APPLY TO ECL DIP PACKAGES
GND -5.2 MANUFACTURES' PART NUMBER
1 16 8 ALL 10,000 SERIES UNLESS OTHERWISE SPECIFIED
1 15 16 8 10110 & 10210
16 8 10158 & 10173
16 OF 6
REV.
NUMBER M8518-YA-PMA6
CODE CS
SIZE D
B
A
"THIS DRAWING AND SPECIFICATIONS, HEREIN, ARE THE PROPERTY OF DIGITAL EQUIPMENT CORPORATION AND SHALL NOT BE REPRODUCED OR COPIED OR USED IN WHOLE OR IN PART AS THE BASIS FOR THE MANUFACTURE OR SALE OF ITEMS WITHOUT WRITTEN PERMISSION.
COPYRIGHT © 1976, DIGITAL EQUIPMENT CORPORATION"
REVISIONS
CHK CHANGE NO. REV
digital
DRN. S. Toomey DATE 03-SEP-76
CHK'D W. Stephenson DATE 9/12/76
ENG. J. C. Allen DATE 19 Apr 77
BOARD LOCATION: 4AF29
SHEET 1 OF 1
PMAGEF.DRW(4,175) 03-SEP-76 12:15
NEXT HIGHER ASSEMBLY:
FIRST USED ON OPTION/MODEL: KL10PV
B-DD-M8518-YA
TITLE: PHYSICAL MEM ADR PWR, GND, CAP
SIZE D
CODE CS
NUMBER M8518-YA-PMA6
REV.
89
MR

RESISTOR LOC(PIN)	SHOWN ON DRW#	REF	VALUE	TERMINATES SIGNAL
R171(1)	PMA1	B6	68Ω	%E14(14)
R11(1)	PMA1	C2	68Ω	%E15(15)
R12(1)	PMA1	D2	68Ω	%E15(2)
R8(1)	PMA1	C2	68Ω	%E19(2)
R30(1)	PMA2	A4	68Ω	%E36(15)
R226(1)	PMA4	C2	68Ω	%E43(2)
R219(1)	PMA5	D5	68Ω	%E52(2)
R163(1)	PMA5	B5	68Ω	%E57(15)
R160(1)	PMA5	B4	68Ω	%E57(2)
R147(1)	PMA5	B4	68Ω	%E57(3)
R144(1)	PMA5	C2	68Ω	%E59(2)
R150(1)	PMA5	A5	68Ω	%E62(15)
R153(1)	PMA5	A4	68Ω	%E62(2)
R152(1)	PMA5	A4	68Ω	%E62(3)
R145(1)	PMA5	D2	68Ω	%E64(7)
R28(1)	PMA2	A5	68Ω	%E65(2)
R204(1)	PMA5	C2	68Ω	%E66(6)
R146(1)	PMA5	C2	68Ω	%E66(7)
R251(1)	PMA5	D7	68Ω	%E67(15)
R262(1)	PMA5	D7	68Ω	%E67(9)
R159(1)	PMA5	C5	68Ω	%E72(15)
R114(1)	PMA5	C4	68Ω	%E72(2)
R119(1)	PMA5	C4	68Ω	%E72(3)
R158(1)	PMA5	D5	68Ω	%E77(15)
R162(1)	PMA5	D4	68Ω	%E77(2)
R161(1)	PMA5	D4	68Ω	%E77(3)
R148(1)	PMA5	D3	68Ω	%E78(14)
R151(1)	PMA5	D3	68Ω	%E78(15)
R143(1)	PMA5	D3	68Ω	%E78(2)
R9(1)	PMA1	C6	68Ω	%E9(15)
R5(1)	PMA1	B7	68Ω	%E9(2)
R170(1)	PMA1	C6	68Ω	%E9(9)
R104(1)	PMA5	D2	68Ω	APR EBOX ERA H
R217(1)	PMA5	C2	68Ω	APR6 EBOX CCA H
R103(1)	PMA5	C3	68Ω	APR6 EBOX EBR H
R71(1)	PMA5	C2	68Ω	APR6 EBOX UBR H
R89(1)	PMA3	D7	68Ω	CAM 14 H
R245(1)	PMA3	D6	68Ω	CAM 15 H
R241(1)	PMA3	D5	68Ω	CAM 16 H
R230(1)	PMA3	D4	68Ω	CAM 17 H

RESISTOR LOC(PIN)	SHOWN ON DRW#	REF	VALUE	TERMINATES SIGNAL
R175(1)	PMA3	D3	68Ω	CAM 18 H
R234(1)	PMA3	D2	68Ω	CAM 19 H
R19(1)	PMA3	C7	68Ω	CAM 20 H
R183(1)	PMA3	C6	68Ω	CAM 21 H
R81(1)	PMA3	C5	68Ω	CAM 22 H
R23(1)	PMA3	C4	68Ω	CAM 23 H
R97(1)	PMA3	C3	68Ω	CAM 24 H
R92(1)	PMA3	C2	68Ω	CAM 25 H
R198(1)	PMA3	C1	68Ω	CAM 26 H
R205(1)	PMA5	D6	68Ω	CCL CHAN EPT H
R135(1)	PMA3	D7	68Ω	CCW CHA 14 H
R247(1)	PMA3	D6	68Ω	CCW CHA 15 H
R243(1)	PMA3	D5	68Ω	CCW CHA 16 H
R232(1)	PMA3	D4	68Ω	CCW CHA 17 H
R177(1)	PMA3	D3	68Ω	CCW CHA 18 H
R238(1)	PMA3	D2	68Ω	CCW CHA 19 H
R84(1)	PMA3	C7	68Ω	CCW CHA 20 H
R187(1)	PMA3	C6	68Ω	CCW CHA 21 H
R80(1)	PMA3	C5	68Ω	CCW CHA 22 H
R202(1)	PMA3	C4	68Ω	CCW CHA 23 H
R93(1)	PMA3	C3	68Ω	CCW CHA 24 H
R196(1)	PMA3	C2	68Ω	CCW CHA 25 H
R189(1)	PMA3	C1	68Ω	CCW CHA 26 H
R60(1)	PMA3	B7	68Ω	CCW CHA 27 H
R34(1)	PMA3	B6	68Ω	CCW CHA 28 H
R44(1)	PMA3	B5	68Ω	CCW CHA 29 H
R48(1)	PMA3	B4	68Ω	CCW CHA 30 H
R52(1)	PMA3	B3	68Ω	CCW CHA 31 H
R255(1)	PMA4	C7	68Ω	CCW CHA 32 H
R218(1)	PMA4	C6	68Ω	CCW CHA 33 H
R141(1)	PMA2	C2	68Ω	CLK1 PMA H
R210(1)	PMA5	B7	68Ω	CSH1 CCA REQ GRANT H
R209(1)	PMA5	B7	68Ω	CSH1 CHAN REQ GRANT H
R211(1)	PMA5	C5	68Ω	CSH1 EBOX CCA GRANT H
R213(1)	PMA5	C5	68Ω	CSH1 EBOX ERA GRANT H
R212(1)	PMA5	D5	68Ω	CSH1 EBOX REQ GRANT H
R157(1)	PMA5	A7	68Ω	-CSH1 EBOX REQ GRANT A H
R149(1)	PMA5	C7	68Ω	-CSH1 READY TO GO H
R263(1)	PMA5	D7	68Ω	-CSH5 PAGE REFILL T4 H
R100(1)	PMA4	C7	68Ω	HOLD ERA H

RESISTOR LOC(PIN)	SHOWN ON DRW#	REF	VALUE	TERMINATES SIGNAL
R54(1)	PMA2	A6	68Ω	MBX1 CCA ALL PAGES CYC H
R32(1)	PMA2	B3	68Ω	MBX1 CCA SEL 1 H
R99(1)	PMA2	B3	68Ω	MBX1 CCA SEL 2 H
R70(1)	PMA1	C7	68Ω	MBX1 EBOX LOAD REG H
R115(1)	PMA4	C5	68Ω	MBX2 CACHE TO MB 34 H
R111(1)	PMA4	C4	68Ω	MBX2 CACHE TO MB 35 H
R155(1)	PMA5	C7	68Ω	-MBX4 WRITEBACK T2 H
R73(1)	PMA5	D7	68Ω	-MCL2 VMA USER H
R55(1)	PMA5	B2	68Ω	-MCL6 EBOX MAY BE PAGED H
R102(1)	PMA5	C3	68Ω	MCL6 VMA EPT H
R252(1)	PMA5	C3	68Ω	MCL6 VMA UPT H
R137(1)	PMA3	D7	68Ω	PAG1 PT 14 A H
R249(1)	PMA3	D6	68Ω	PAG1 PT 15 A H
R237(1)	PMA3	D5	68Ω	PAG1 PT 16 A H
R228(1)	PMA3	D4	68Ω	PAG1 PT 17 A H
R173(1)	PMA3	D3	68Ω	PAG2 PT 18 A H
R231(1)	PMA3	D2	68Ω	PAG2 PT 19 A H
R83(1)	PMA3	C7	68Ω	PAG2 PT 20 A H
R186(1)	PMA3	C6	68Ω	PAG2 PT 21 A H
R133(1	PMA3	C5	68Ω	PAG2 PT 22 A H
R21(1)	PMA3	C4	68Ω	PAG2 PT 23 A H
R96(1)	PMA3	C3	68Ω	PAG2 PT 24 A H
R201(1)	PMA3	C2	68Ω	PAG2 PT 25 A H
R140(1)	PMA3	C1	68Ω	PAG2 PT 26 A H
R86(1)	PMA1	C2	68Ω	PMA1 CCA 14 H
R75(1)	PMA1	C2	68Ω	PMA1 EBR 14 H
R69(1)	PMA1	C6	68Ω	PMA1 EBR 15 H
R66(1)	PMA1	C6	68Ω	PMA1 EBR 16 H
R65(1)	PMA1	C6	68Ω	PMA1 EBR 17 H
R120(1)	PMA1	C6	68Ω	PMA1 EBR 18 H
R130(1)	PMA1	C5	68Ω	PMA1 EBR 19 H
R127(1)	PMA1	C5	68Ω	PMA1 EBR 20 H
R123(1)	PMA1	C5	68Ω	PMA1 EBR 21 H
R125(1)	PMA1	C5	68Ω	PMA1 EBR 22 H
R169(1)	PMA1	C4	68Ω	PMA1 EBR 23 H
R166(1)	PMA1	C4	68Ω	PMA1 EBR 24 H
R165(1)	PMA1	C4	68Ω	PMA1 EBR 25 H
R225(1)	PMA1	C4	68Ω	PMA1 EBR 26 H
R76(1)	PMA1	C2	68Ω	PMA1 UBR 14 H
R68(1)	PMA1	D6	68Ω	PMA1 UBR 15 H

RESISTOR LOC(PIN)	SHOWN ON DRW#	REF	VALUE	TERMINATES SIGNAL
R67(1)	PMA1	D6	68Ω	PMA1 UBR 16 H
R64(1)	PMA1	D6	68Ω	PMA1 UBR 17 H
R122(1)	PMA1	D6	68Ω	PMA1 UBR 18 H
R129(1)	PMA1	D5	68Ω	PMA1 UBR 19 H
R128(1)	PMA1	D5	68Ω	PMA1 UBR 20 H
R124(1)	PMA1	D5	68Ω	PMA1 UBR 21 H
R126(1)	PMA1	D5	68Ω	PMA1 UBR 22 H
R168(1)	PMA1	D4	68Ω	PMA1 UBR 23 H
R167(1)	PMA1	D4	68Ω	PMA1 UBR 24 H
R164(1)	PMA1	D4	68Ω	PMA1 UBR 25 H
R224(1)	PMA1	D4	68Ω	PMA1 UBR 26 H
R138(1)	PMA1	B2	68Ω	PMA1 UEBR 14 H
R248(1)	PMA1	B3	68Ω	PMA1 UEBR 15 H
R244(1)	PMA1	A3	68Ω	PMA1 UEBR 16 H
R233(1)	PMA1	A3	68Ω	PMA1 UEBR 17 H
R178(1)	PMA1	A3	68Ω	PMA1 UEBR 18 H
R239(1)	PMA1	B2	68Ω	PMA1 UEBR 19 H
R85(1)	PMA1	A2	68Ω	PMA1 UEBR 20 H
R176(1)	PMA1	A2	68Ω	PMA1 UEBR 21 H
R79(1)	PMA1	A2	68Ω	PMA1 UEBR 22 H
R18(1)	PMA1	B1	68Ω	PMA1 UEBR 23 H
R90(1)	PMA1	A1	68Ω	PMA1 UEBR 24 H
R193(1)	PMA1	A1	68Ω	PMA1 UEBR 25 H
R188(1)	PMA1	A1	68Ω	PMA1 UEBR 26 H
R7(1)	PMA1	B7	68Ω	PMA1 VA 14 H
R6(1)	PMA1	A7	68Ω	PMA1 VA 15 H
R1(1)	PMA1	A7	68Ω	PMA1 VA 16 H
R3(1)	PMA1	A7	68Ω	PMA1 VA 17 H
R105(1)	PMA1	B6	68Ω	PMA1 VA 18 H
R265(1)	PMA1	B6	68Ω	-PMA1 VA 18 H
R42(1)	PMA1	B6	68Ω	PMA1 VA 19 H
R107(1)	PMA1	B6	68Ω	-PMA1 VA 19-21=7
R46(1)	PMA1	A6	68Ω	PMA1 VA 20 H
R50(1)	PMA1	A6	68Ω	PMA1 VA 21 H
R256(1)	PMA1	B5	68Ω	PMA1 VA 22 H
R222(1)	PMA1	B5	68Ω	PMA1 VA 23 H
R87(1)	PMA1	A4	68Ω	PMA1 VA 24 H
R131(1)	PMA1	A4	68Ω	PMA1 VA 25 H
R88(1)	PMA1	A4	68Ω	PMA1 VA 26 H
R246(1)	PMA2	D6	68Ω	PMA2 CCA 15 H

NOTE:

1. ALL TERMINATORS HAVE PIN TWO CONNECTED TO -2.0V AND ARE 5% 1/4WATT UNLESS OTHERWISE SPECIFIED
2. ENTRIES ARE SORTED BY SIGNAL NAME
3. % INDICATES OUTPUT OF DIP LOC AND
   ( ) INDICATES PIN NUMBER

"THIS DRAWING AND SPECIFICATIONS, HEREIN, ARE THE PROPERTY OF DIGITAL EQUIPMENT CORPORATION AND SHALL NOT BE REPRODUCED OR COPIED OR USED IN WHOLE OR IN PART AS THE BASIS FOR THE MANUFACTURE OR SALE OF ITEMS WITHOUT WRITTEN PERMISSION.
COPYRIGHT © 1977, DIGITAL EQUIPMENT CORPORATION"

REVISIONS		
CHK	CHANGE NO.	REV

digital

DRN. C Smith DATE 17-JAN-77 ENG. J.P. Allen DATE 18-Jan-77
CHK'D. J.P. Allen DATE 18-Jan-77 BOARD LOCATION: 4A-F29
F85181.DRW[4,546] 07-JAN-77 10:18 SHEET 1 OF 2
FIRST USED ON OPTION/MODEL: KL10PV NEXT HIGHER ASSEMBLY: B-DD-M8518-YA

TITLE: PHYSICAL MEM ADDR TERMINATORS

SIZE	CODE	NUMBER	REV.
D	CS	M8518-YA-RES	

MR

RESISTOR LOC(PIN)	SHOWN ON DRW#	REF	VALUE	TERMINATES SIGNAL
R240(1)	PMA2	D6	68Ω	PMA2 CCA 16 H
R229(1)	PMA2	D6	68Ω	PMA2 CCA 17 H
R174(1)	PMA2	D6	68Ω	PMA2 CCA 18 H
R236(1)	PMA2	D5	68Ω	PMA2 CCA 19 H
R20(1)	PMA2	D5	68Ω	PMA2 CCA 20 H
R184(1)	PMA2	D5	68Ω	PMA2 CCA 21 H
R132(1)	PMA2	D5	68Ω	PMA2 CCA 22 H
R24(1)	PMA2	D3	68Ω	PMA2 CCA 23 H
R94(1)	PMA2	D3	68Ω	PMA2 CCA 24 H
R199(1)	PMA2	D3	68Ω	PMA2 CCA 25 H
R194(1)	PMA2	D3	68Ω	PMA2 CCA 26 H
R58(1)	PMA2	B6	68Ω	PMA2 CCA 27 H
R36(1)	PMA2	B6	68Ω	PMA2 CCA 28 H
R37(1)	PMA2	B6	68Ω	PMA2 CCA 29 H
R31(1)	PMA2	B5	68Ω	PMA2 CCA 30 H
R25(1)	PMA2	B5	68Ω	PMA2 CCA 31 H
R26(1)	PMA2	B5	68Ω	PMA2 CCA 32 H
R27(1)	PMA2	B5	68Ω	PMA2 CCA 33 H
R113(1)	PMA2	B3	68Ω	PMA2 CCA 34 H
R109(1)	PMA2	B3	68Ω	PMA2 CCA 35 H
R74(1)	PMA2	C7	68Ω	PMA2 CCA LOAD H
R4(1)	PMA2	C6	68Ω	-PMA2 CCA LOAD H
R142(1)	PMA2	C2	68Ω	PMA2 CLOCK A H
R56(1)	PMA2	C2	68Ω	PMA2 CLOCK B H
R63(1)	PMA2	C2	68Ω	PMA2 CLOCK C H
R16(1)	PMA2	C2	68Ω	PMA2 CLOCK D H
R121(1)	PMA2	C2	68Ω	PMA2 CLOCK E H
R2(1)	PMA2	C2	68Ω	PMA2 CLOCK F H
R268(1)	PMA2	C6	68Ω	PMA2 HI
R136(1)	PMA4	D7	68Ω	PMA4 ERA 14 H
R250(1)	PMA4	D7	68Ω	PMA4 ERA 15 H
R242(1)	PMA4	D7	68Ω	PMA4 ERA 16 H
R227(1)	PMA4	D7	68Ω	PMA4 ERA 17 H
R172(1)	PMA4	D6	68Ω	PMA4 ERA 18 H
R235(1)	PMA4	D6	68Ω	PMA4 ERA 19 H
R82(1)	PMA4	D6	68Ω	PMA4 ERA 20 H
R185(1)	PMA4	D6	68Ω	PMA4 ERA 21 H
R134(1)	PMA4	D5	68Ω	PMA4 ERA 22 H
R22(1)	PMA4	D5	68Ω	PMA4 ERA 23 H
R95(1)	PMA4	D5	68Ω	PMA4 ERA 24 H

RESISTOR LOC(PIN)	SHOWN ON DRW#	REF	VALUE	TERMINATES SIGNAL
R200(1)	PMA4	D5	68Ω	PMA4 ERA 25 H
R139(1)	PMA4	D4	68Ω	PMA4 ERA 26 H
R61(1)	PMA4	D4	68Ω	PMA4 ERA 27 H
R39(1)	PMA4	D4	68Ω	PMA4 ERA 28 H
R43(1)	PMA4	D4	68Ω	PMA4 ERA 29 H
R47(1)	PMA4	D3	68Ω	PMA4 ERA 30 H
R51(1)	PMA4	D3	68Ω	PMA4 ERA 31 H
R257(1)	PMA4	D3	68Ω	PMA4 ERA 32 H
R221(1)	PMA4	D3	68Ω	PMA4 ERA 33 H
R116(1)	PMA4	D1	68Ω	PMA4 ERA 34 H
R108(1)	PMA4	D1	68Ω	PMA4 ERA 35 H
R181(1)	PMA5	D1	68Ω	PMA5 14-26 SEL 1 H
R203(1)	PMA5	D1	68Ω	-PMA5 14-26 SEL 1 H
R180(1)	PMA5	D1	68Ω	PMA5 14-26 SEL 2 H
R197(1)	PMA5	D1	68Ω	-PMA5 14-26 SEL 2 H
R179(1)	PMA5	D1	68Ω	PMA5 14-26 SEL 4 H
R195(1)	PMA5	D1	68Ω	-PMA5 14-26 SEL 4 H
R62(1)	PMA5	C3	68Ω	PMA5 27 SEL 1 H
R53(1)	PMA5	C3	68Ω	PMA5 27 SEL 2 H
R52(1)	PMA5	D3	68Ω	PMA5 27 SEL 4 H
R40(1)	PMA5	A3	68Ω	PMA5 28-31 SEL 1 H
R98(1)	PMA5	C3	68Ω	PMA5 28-31 SEL 2 H
R35(1)	PMA5	C3	68Ω	PMA5 28-31 SEL 4 H
R220(1)	PMA5	A3	68Ω	PMA5 32-33 SEL 1 H
R258(1)	PMA5	A3	68Ω	PMA5 32-33 SEL 2 H
R259(1)	PMA5	A3	68Ω	PMA5 32-33 SEL 4 H
R117(1)	PMA5	B2	68Ω	PMA5 34-35 SEL 1 H
R118(1)	PMA5	B2	68Ω	PMA5 34-35 SEL 2 H
R112(1)	PMA5	B2	68Ω	PMA5 34-35 SEL 4 H
R208(1)	PMA5	D7	68Ω	PMA5 PAGE REFILL 3,4 H
R216(1)	PMA5	D7	68Ω	PMA5 PAGE REFILL 5,7 H
R264(1)	PMA5	C7	68Ω	PMA5 PAGE REFILL 7 H
R206(1)	PMA5	C7	68Ω	PMA5 PAGE REFILL T4 A H
R266(1)	PMA5	C7	68Ω	-PMA5 PAGE REFILL T4 A H
R207(1)	PMA5	D7	68Ω	-PMA5 PGRF UBR COND H
R223(1)	PMA5	C2	68Ω	PMA5 UBR SEL H
R77(1)	PMA5	C2	68Ω	-PMA5 UBR SEL H
R261(1)	PMA5	B7	68Ω	PMA5 VMA EXEC PER PROC H
R214(1)	PMA5	B7	68Ω	-PMA5 VMA EXEC PER PROC H
R156(1)	PMA5	B7	68Ω	PMA5 WRITEBACK T2 A H

RESISTOR LOC(PIN)	SHOWN ON DRW#	REF	VALUE	TERMINATES SIGNAL
R267(1)	PMA5	B7	68Ω	-PMA5 WRITEBACK T2 A H
R13(1)	PMA1	B6	68Ω	VMA 18 A H
R14(1)	PMA1	B6	68Ω	VMA 19 A H
R10(1)	PMA1	A6	68Ω	VMA 20 A H
R15(1)	PMA1	A6	68Ω	VMA2 VMA 21 A H
R78(1)	PMA1	B5	68Ω	VMA2 VMA 22 A H
R17(1)	PMA1	B5	68Ω	VMA2 VMA 23 A H
R91(1)	PMA1	B5	68Ω	VMA2 VMA 24 A H
R192(1)	PMA1	A5	68Ω	VMA2 VMA 25 A H
R182(1)	PMA1	A5	68Ω	VMA2 VMA 26 A H
R59(1)	PMA3	A7	68Ω	VMA2 VMA 27 H
R33(1)	PMA3	A6	68Ω	VMA2 VMA 28 H
R38(1)	PMA3	A5	68Ω	VMA2 VMA 29 H
R41(1)	PMA3	A4	68Ω	VMA2 VMA 30 H
R45(1)	PMA3	A3	68Ω	VMA2 VMA 31 H
R253(1)	PMA4	C7	68Ω	VMA2 VMA 32 H
R260(1)	PMA4	C6	68Ω	VMA2 VMA 33 H
R110(1)	PMA4	C5	68Ω	VMA2 VMA 34 H
R106(1)	PMA4	C4	68Ω	VMA2 VMA 35 H

NOTE:

1. ALL TERMINATORS HAVE PIN TWO CONNECTED TO -2.0V AND ARE 5% 1/4WATT UNLESS OTHERWISE SPECIFIED
2. ENTRIES ARE SORTED BY SIGNAL NAME
3. % INDICATES OUTPUT OF DIP LOC AND
   ( ) INDICATES PIN NUMBER

"THIS DRAWING AND SPECIFICATIONS, HEREIN, ARE THE PROPERTY OF DIGITAL EQUIPMENT CORPORATION AND SHALL NOT BE REPRODUCED OR COPIED OR USED IN WHOLE OR IN PART AS THE BASIS FOR THE MANUFACTURE OR SALE OF ITEMS WITHOUT WRITTEN PERMISSION.
COPYRIGHT © 1977, DIGITAL EQUIPMENT CORPORATION"

REVISIONS		
CHK	CHANGE NO.	REV

digital

DRN. E. Smith DATE 17-JAN-77 ENG. J. D. Allen DATE 18 Jan 77
CHK'D J. D. Allen DATE 18 JAN 77 BOARD LOCATION:
F85182.DRW[4,546] 17-JAN-77 10:18 SHEET 2 OF 2
FIRST USED ON OPTION/MODEL: KL10PV NEXT HIGHER ASSEMBLY: B-DD-M8518-YA

TITLE: PHYSICAL MEM ADDR TERMINATORS

SIZE	CODE	NUMBER	REV.
D	CS	M8518-YA-RES	

91 MR

REVISION CONTROL SHEET

CUSTOMER PRINT SET	MFG SET	DRAWING NO	NO OF SHT	DESCRIPTION	OPTION NO/FILE DATE	REVISIONS (REWORK VERSION)		
			-	MODULE REVISION		A	B	B
		D-UA-M8519-Ø-Ø	5	INT MEM BUS TRANSLATOR		-	A	A1
		D-CS-M8519-Ø-MEM1	1	INT MEM BUS TRANSLATOR		-	-	-1
		D-CS-M8519-Ø-MEM2	1	INT MEM BUS TRANSLATOR		-	-	-1
		D-CS-M8519-Ø-MEM3	1	INT MEM BUS TRANSLATOR		-	-	-1
		D-CS-M8519-Ø-MEM4	1	INT MEM BUS TRANSLATOR		-	-	-1
		D-CS-M8519-Ø-MEM5	1	INT MEM BUS TRANSLATOR		-	-	-1
		D-CS-M8519-Ø-MEM6	1	INT MEM BUS TRANSLATOR		-	A	A1
		D-CS-M8519-Ø-RES	1	INTERNAL MEMORY TERMINATORS		-	-	-1
		K-CO-M8519-Ø-4	1	INT MEM BUS TRANSLATOR		B	B	B
		D-AH-M8519-Ø-5	4	INT MEM BUS TRANSLATOR		A	A	A
		B-MH-M8519-Ø-6	1	MODULE ECO HISTORY		-	REF	REF
		5010639	-	ETCH CIRCUIT BOARD		B	B	B
		P00-M8519-00	-	PROCESS SHEET (REF ONLY)		-	-	–

CUSTOMER PRINT SET CODES	
	X = PRINT OF DOCUMENT INCLUDED IN PRINT SET C = INCLUDES ALL PRINTS INDICATED ON DOCUMENT S = CONFIDENTIAL AUTHORIZED SIGNATURE REQUIRED

ECO NO	
ORIG	
00001	
00002	

TITLE		SIZE	CODE	NUMBER	REV
INT MEM BUS TRANSLATOR	SHEET 2 OF 3	B	DD	M8519-Ø	B

MR 92

"THIS DRAWING AND SPECIFICATIONS, HEREIN, ARE THE PROPERTY OF DIGITAL EQUIPMENT CORPORATION AND SHALL NOT BE REPRODUCED OR COPIED OR USED IN WHOLE OR IN PART AS THE BASIS FOR THE MANUFACTURE OR SALE OF ITEMS WITHOUT WRITTEN PERMISSION. COPYRIGHT ©1974 DIGITAL EQUIPMENT CORPORATION"

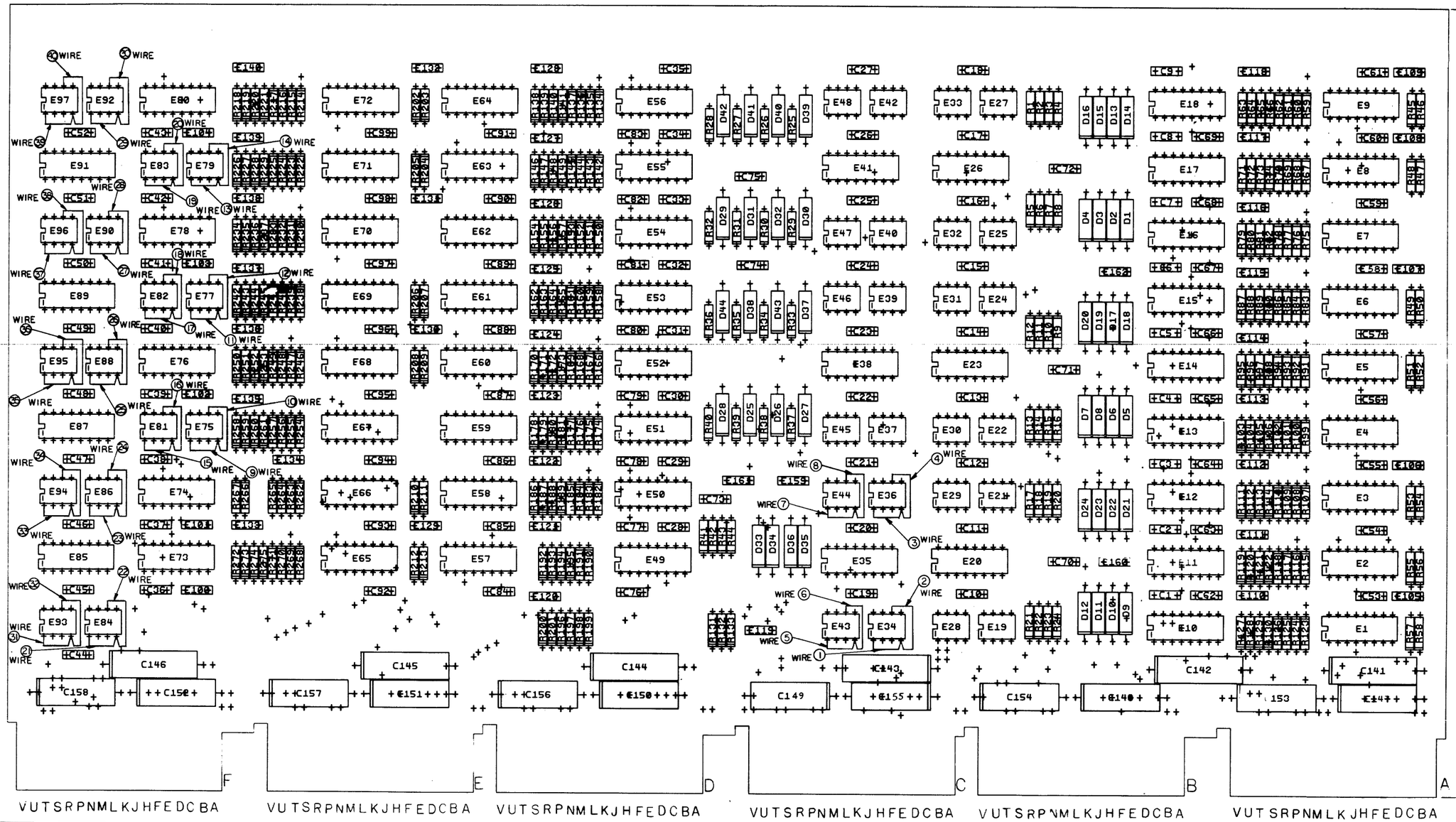

REVISIONS		
CHK	CHANGE NO.	REV.

TITLE	SIZE	CODE	NUMBER	REV.
INT MEM BUS TRANSLATOR	D	UA	M8519-0-0	A1
SCALE 2/1	SHEET 2 OF 5	DIST.		

93 MR

REVISION CONTROL SHEET

CUSTOMER PRINT SET	MFG SET	DRAWING NO	NO OF SHT	DESCRIPTION	OPTION NO/FILE DATE	REVISIONS (NEW LAYOUT VERSION)		
			-	MODULE REVISION		A	B	C
		D-UA-M8519-Ø-Ø	5	INT MEM BUS TRANSLATOR		-	A	B
		D-CS-M8519-Ø-MTØ1	1	INT MEM BUS TRANSLATOR		-	-	A
		D-CS-M8519-Ø-MTØ2	1	INT MEM BUS TRANSLATOR		-	-	A
		D-CS-M8519-Ø-MTØ3	1	INT MEM BUS TRANSLATOR		-	-	A
		D-CS-M8519-Ø-MTØ4	1	INT MEM BUS TRANSLATOR		-	-	A
		D-CS-M8519-Ø-MTØ5	1	INT MEM BUS TRANSLATOR		-	-	A
		D-CS-M8519-Ø-MTØ6	1	INT MEM BUS TRANSLATOR		-	A	B
		D-CS-M8519-Ø-RES	1	INTERNAL MEMORY TERMINATORS		-	-	A
		K-CO-M8519-Ø-4	1	INT MEM BUS TRANSLATOR		B	B	C
		D-AH-M8519-Ø-5	4	INT MEM BUS TRANSLATOR		A	A	B
		B-MH-M8519-Ø-6	1	MODULE ECO HISTORY		-	REF	REF
		5010639	-	ETCH CIRCUIT BOARD		B	B	C
		P00-M8519-00	-	PROCESS SHEET (REF ONLY)		-	-	-
					ECO NO	ORIG	00001	00002

CUSTOMER PRINT SET CODES
X = PRINT OF DOCUMENT INCLUDED IN PRINT SET
C = INCLUDES ALL PRINTS INDICATED ON DOCUMENT
S = CONFIDENTIAL AUTHORIZED SIGNATURE REQUIRED

TITLE		SIZE	CODE	NUMBER	REV
INT MEM BUS TRANSLATOR	SHEET 3 OF 3	B	DD	M8519-Ø	B

MR

THIS DRAWING AND SPECIFICATIONS, HEREIN, ARE THE PROPERTY OF DIGITAL EQUIPMENT CORPORATION AND SHALL NOT BE REPRODUCED OR COPIED OR USED IN WHOLE OR IN PART AS THE BASIS FOR THE MANUFACTURE OR SALE OF ITEMS WITHOUT WRITTEN PERMISSION.
COPYRIGHT © 1976 DIGITAL EQUIPMENT CORPORATION

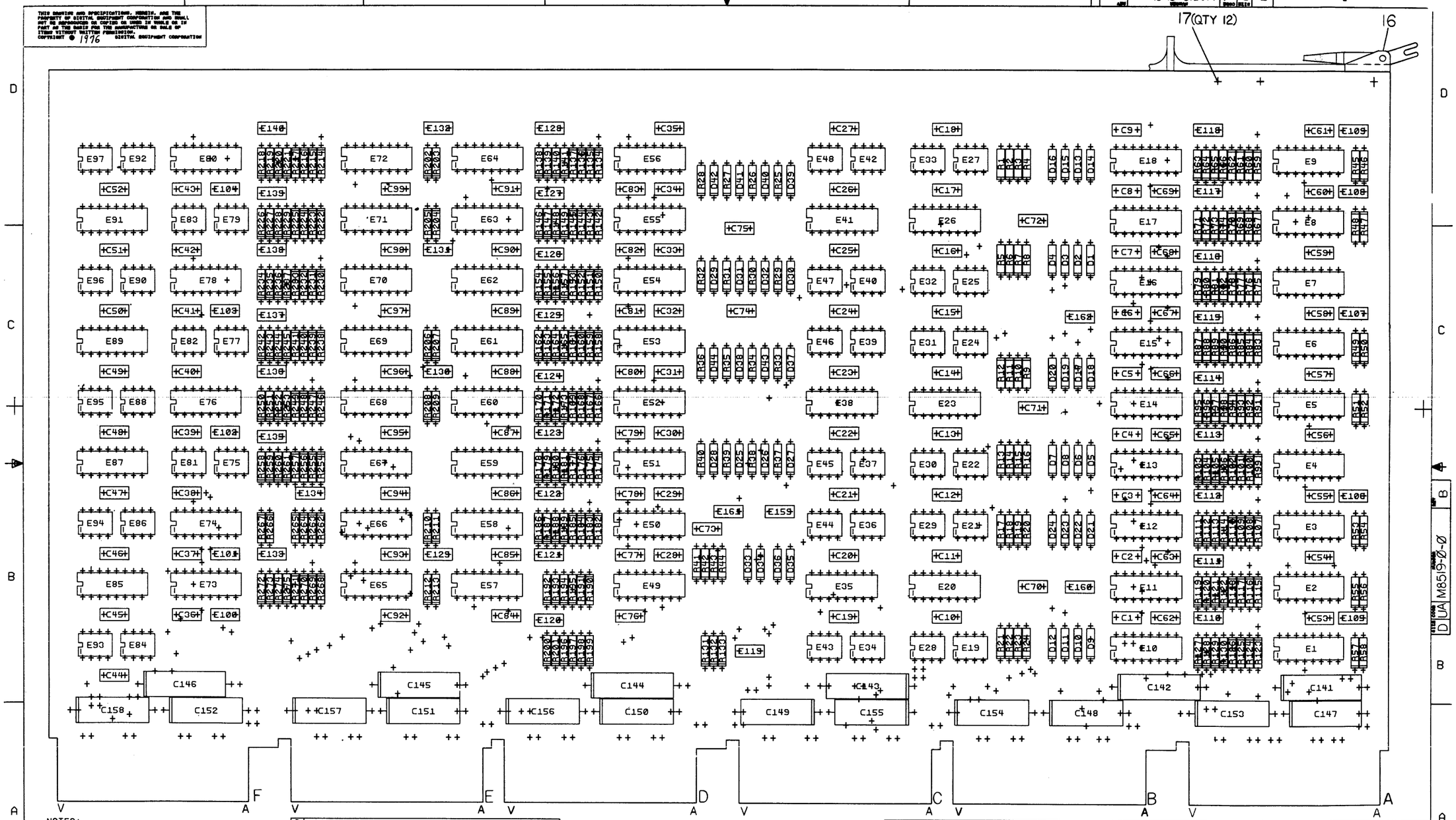

NOTES:

CHK	CHANGE NO	REV

ETCH REV. C-P4
P.C. DESIGN DATA BASE REV. C-P4

SIGNATURES	DATE
DRN.	7-DEC-76
CHK'D.	
ENG. P Sullivan	25 JAN 77
PROJ.ENG. P Sullivan	25 JAN 77
PROD. W. Bailey	25 JAN 77

digital

TITLE INTERNAL MEMORY BUS

SCALE 2/1
SHT. 2 OF 5
NEXT HIGHER ASSY. B-DD-M8519-0

SIZE	CODE	NUMBER	REV
D	UA	M8519-0-0	B

95 MR 1 MS# 30375C

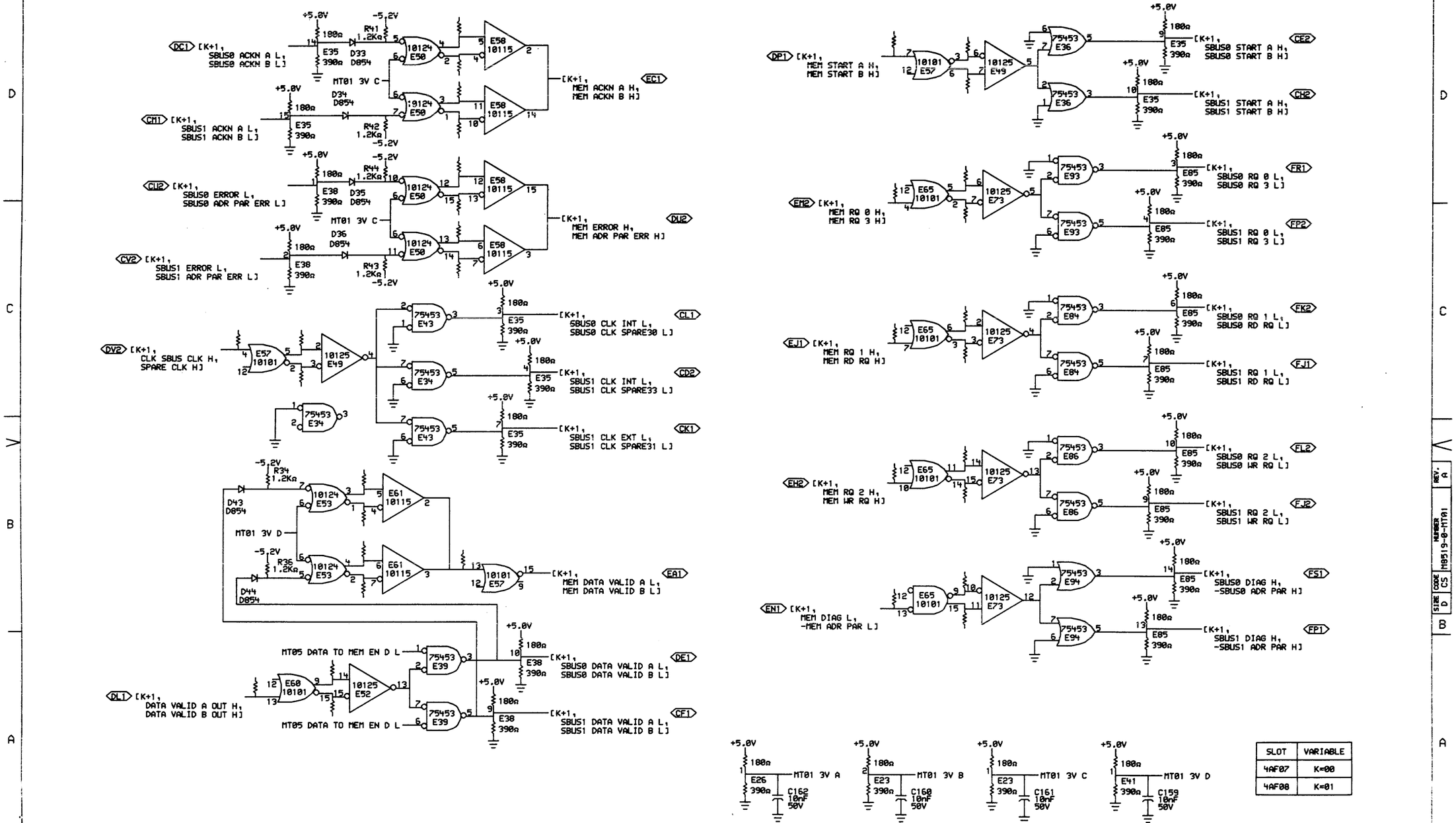

SLOT	VARIABLE
4AF07	K=00
4AF08	K=01

1 OF 6

"THIS DRAWING AND SPECIFICATIONS, HEREIN, ARE THE PROPERTY OF DIGITAL EQUIPMENT CORPORATION AND SHALL NOT BE REPRODUCED OR COPIED OR USED IN WHOLE OR IN PART AS THE BASIS FOR THE MANUFACTURE OR SALE OF ITEMS WITHOUT WRITTEN PERMISSION.
COPYRIGHT © 1977, DIGITAL EQUIPMENT CORPORATION"

REVISIONS		
CHK	CHANGE NO.	REV

digital

DRN. J. Doorley DATE 19-JAN-77 ENG. P.S. Allen DATE 26-Jan-77
CHK DA DATE 14-JAN-77 BOARD LOCATION: SHEET 1 OF 1
M701ER.DRWE4.5473 19-JAN-77 13:10 NEXT HIGHER ASSEMBLY:
FIRST USED ON OPTION/MODEL: KL10 B-DD-M8519-0

TITLE: INTERNAL MEMORY BUS TRANSLATOR

SIZE	CODE	NUMBER	REV.
D	CS	M8519-0-MT01	A

MR

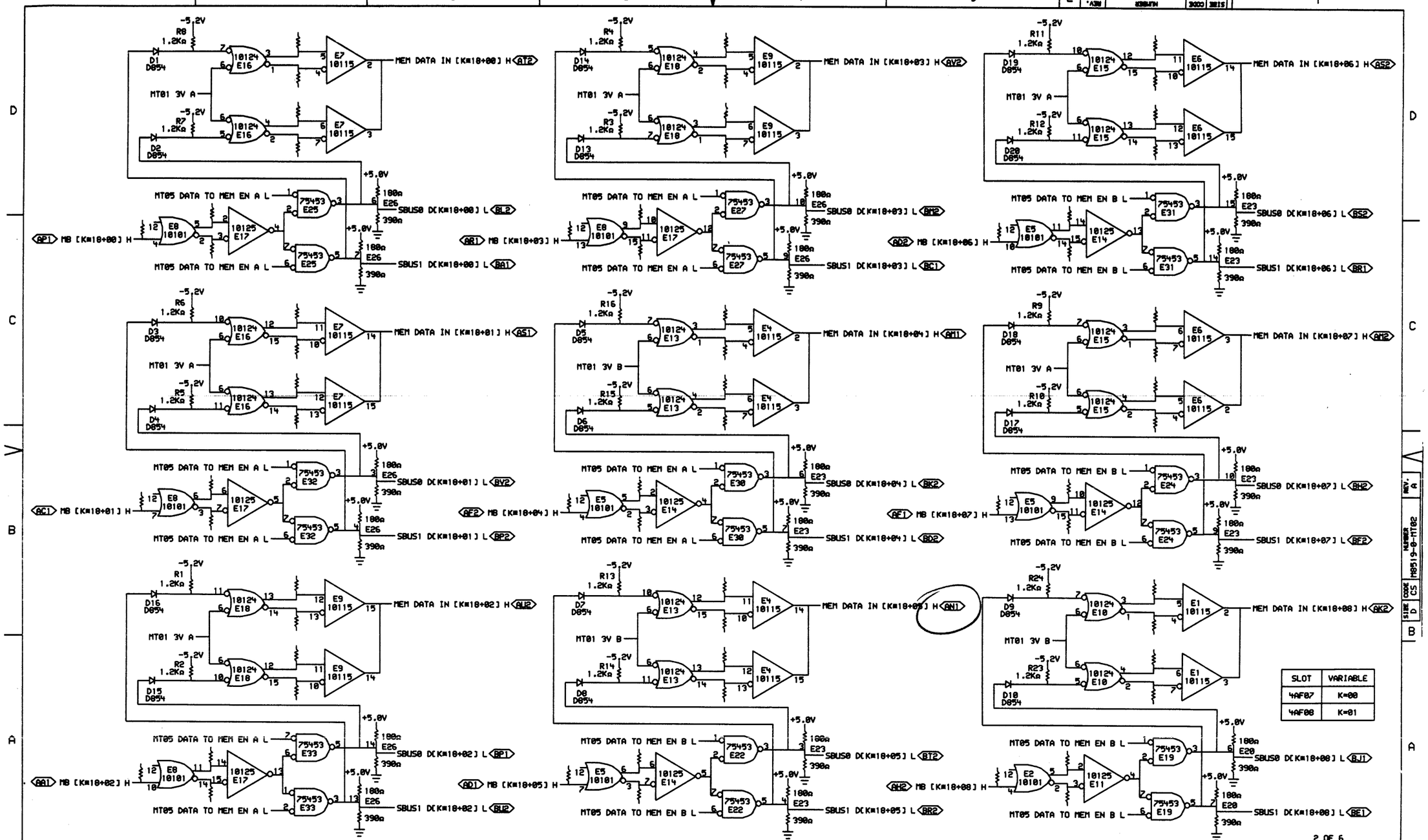

SLOT	VARIABLE
4AF07	K=00
4AF08	K=01

"THIS DRAWING AND SPECIFICATIONS, HEREIN, ARE THE PROPERTY OF DIGITAL EQUIPMENT CORPORATION AND SHALL NOT BE REPRODUCED OR COPIED OR USED IN WHOLE OR IN PART AS THE BASIS FOR THE MANUFACTURE OR SALE OF ITEMS WITHOUT WRITTEN PERMISSION. COPYRIGHT © 1977, DIGITAL EQUIPMENT CORPORATION"

REVISIONS		
CHK	CHANGE NO.	REV

digital

DRN. J. Zappulla DATE 18-JAN-77 ENG. D. Sullivan DATE 2-5-77
CHK'D E. Edwards DATE 1/19/77 BOARD LOCATION:
MT02ER.DRW[4,547] 18-JAN-77 14:22 SHEET 1 OF 1 NEXT HIGHER ASSEMBLY: B-DD-M8519-0
FIRST USED ON OPTION/MODEL: KL10

TITLE: INTERNAL MEMORY BUS TRANSLATOR

SIZE	CODE	NUMBER	REV.
D	CS	M8519-0-MT02	A

MR

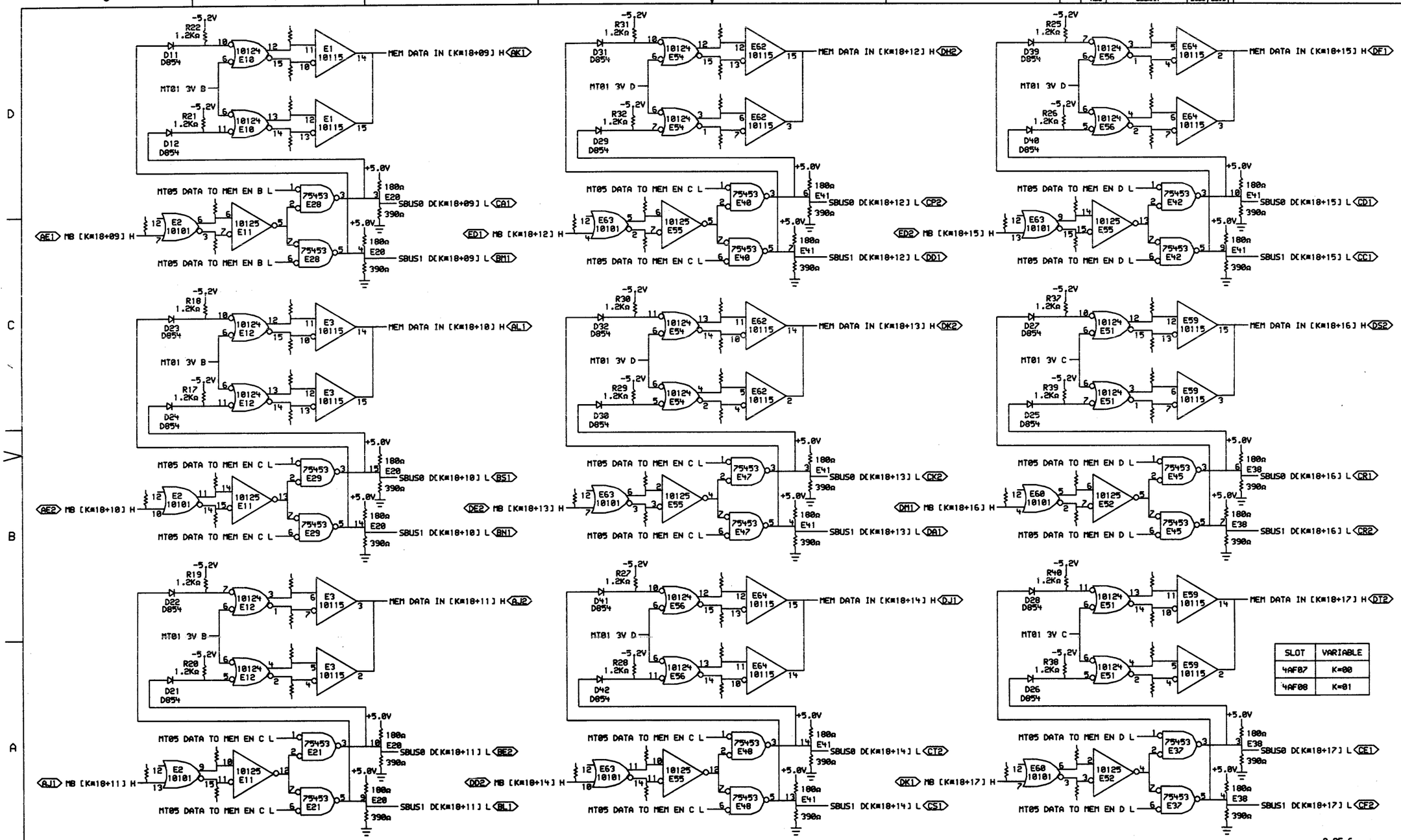

SLOT	VARIABLE
4AF07	K=00
4AF08	K=01

"THIS DRAWING AND SPECIFICATIONS, HEREIN, ARE THE PROPERTY OF DIGITAL EQUIPMENT CORPORATION AND SHALL NOT BE REPRODUCED OR COPIED OR USED IN WHOLE OR IN PART AS THE BASIS FOR THE MANUFACTURE OR SALE OF ITEMS WITHOUT WRITTEN PERMISSION.
COPYRIGHT © 1977, DIGITAL EQUIPMENT CORPORATION"

REVISIONS		
CHK	CHANGE NO.	REV

digital

DRN. L. Lamsby DATE 18-JAN-77
CHK'D E. Cole DATE
ENG. R. Sellers DATE 25-JAN-77
BOARD LOCATION:
SHEET 1 OF 1
MT03ER.DRW(4,547) 18-JAN-77 14:24
NEXT HIGHER ASSEMBLY: B-DD-M8519-0
FIRST USED ON OPTION/MODEL: KL10

TITLE: INTERNAL MEMORY BUS TRANSLATOR

SIZE	CODE	NUMBER	REV.
D	CS	M8519-0-MT03	A

MR

90

SLOT	VARIABLE
4AF07	K=00
4AF08	K=01

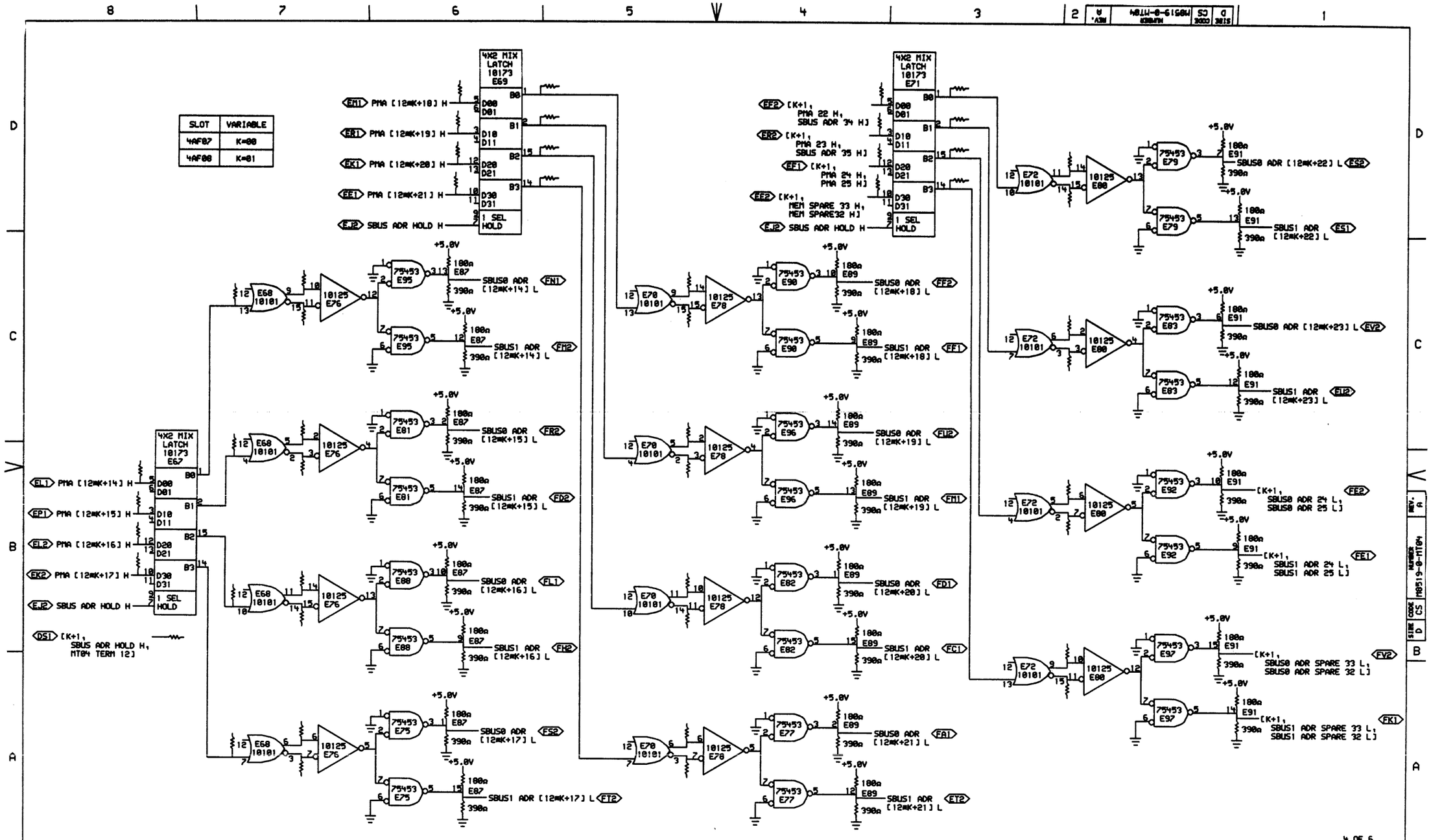

"THIS DRAWING AND SPECIFICATIONS, HEREIN, ARE THE PROPERTY OF DIGITAL EQUIPMENT CORPORATION AND SHALL NOT BE REPRODUCED OR COPIED OR USED IN WHOLE OR IN PART AS THE BASIS FOR THE MANUFACTURE OR SALE OF ITEMS WITHOUT WRITTEN PERMISSION. COPYRIGHT © 1977, DIGITAL EQUIPMENT CORPORATION"

REVISIONS		
CHK	CHANGE NO.	REV

digital

DRN. [illegible] DATE 18-JAN-77 ENG. [illegible] DATE [illegible] TITLE: INTERNAL MEMORY BUS TRANSLATOR

CHK [illegible] DATE [illegible] BOARD LOCATION: SHEET 1 OF 1

MT04ER.DRW[4,542] 18-JAN-77 12:41 NEXT HIGHER ASSEMBLY: B-DD-M8519-0

FIRST USED ON OPTION/MODEL: KL10

SIZE	CODE	NUMBER	REV.
D	CS	M8519-0-MT04	A

99 MR

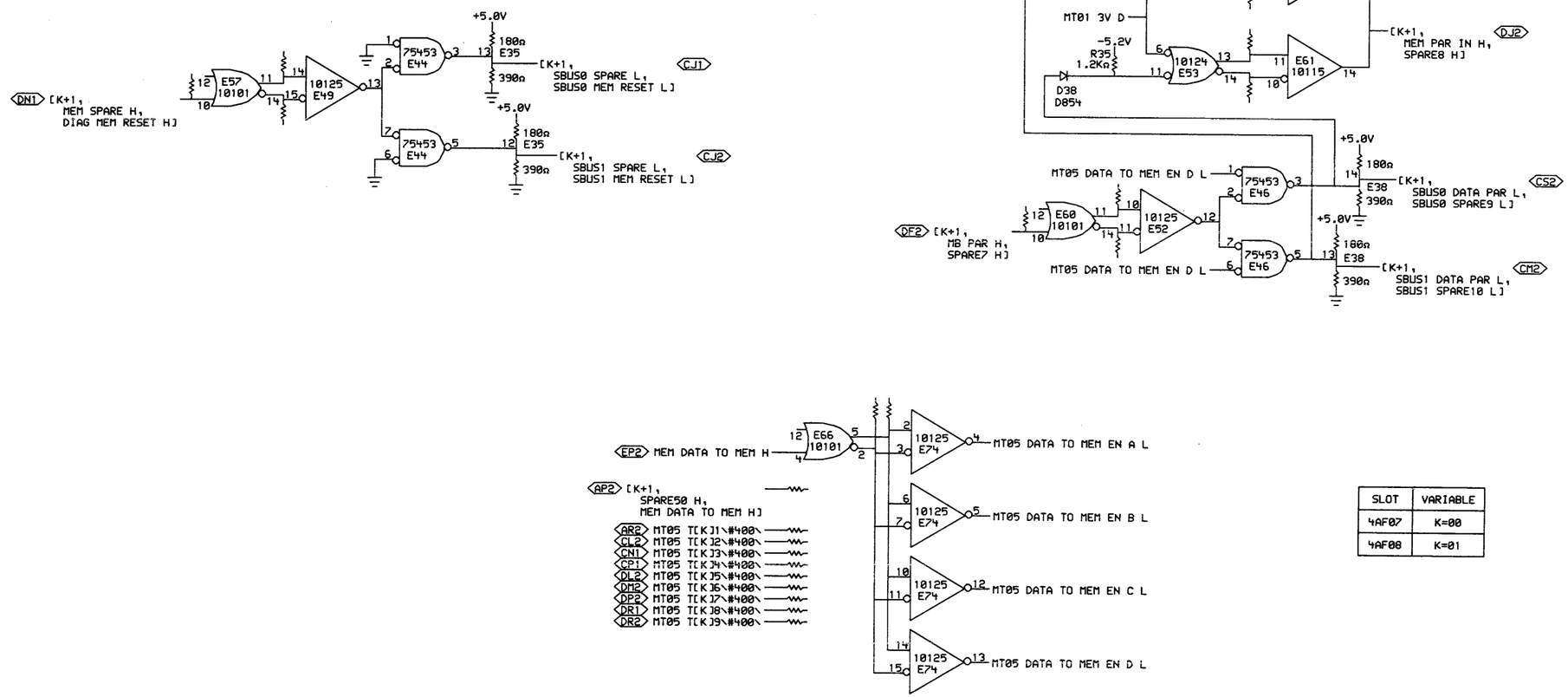

SLOT	VARIABLE
4AF07	K=00
4AF08	K=01

5 OF 6

"THIS DRAWING AND SPECIFICATIONS, HEREIN, ARE THE PROPERTY OF DIGITAL EQUIPMENT CORPORATION AND SHALL NOT BE REPRODUCED OR COPIED OR USED IN WHOLE OR IN PART AS THE BASIS FOR THE MANUFACTURE OR SALE OF ITEMS WITHOUT WRITTEN PERMISSION. COPYRIGHT © 1977, DIGITAL EQUIPMENT CORPORATION"

REVISIONS		
CHK	CHANGE NO.	REV

digital

DRN. DATE 18-JAN-77 ENG. DATE
CHK DATE BOARD LOCATION: SHEET 1 OF 1
MT05ER.DRW[4,547] 18-JAN-77 14:26 NEXT HIGHER ASSEMBLY:
FIRST USED ON OPTION/MODEL: KL10 B-DD-M8519-0

TITLE: INTERNAL MEMORY BUS TRANSLATOR

SIZE	CODE	NUMBER	REV.
D	CS	M8519-0-MT05	A

MR

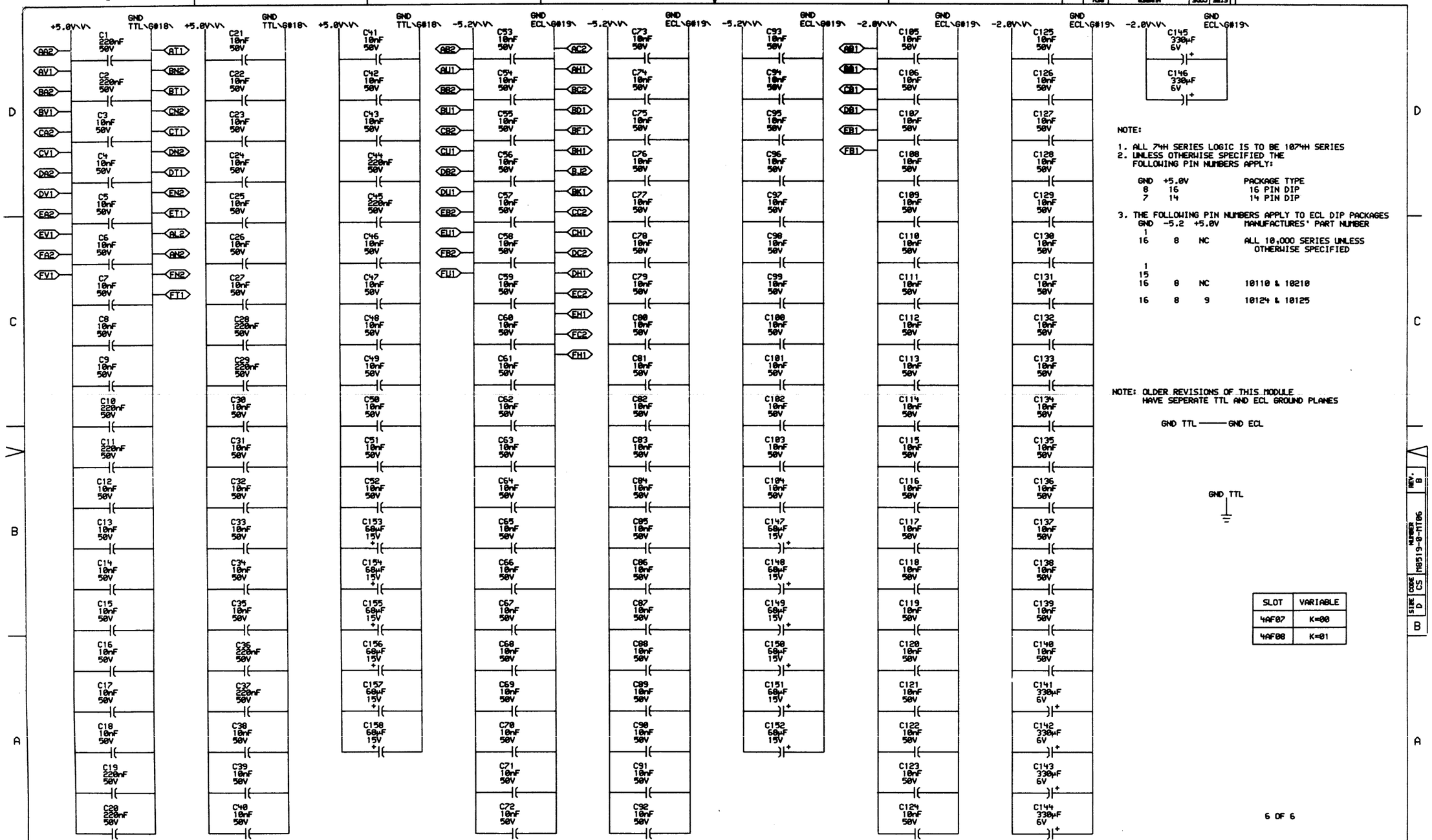

NOTE:

1. ALL 74H SERIES LOGIC IS TO BE 1074H SERIES
2. UNLESS OTHERWISE SPECIFIED THE FOLLOWING PIN NUMBERS APPLY:

GND	+5.0V	PACKAGE TYPE
8	16	16 PIN DIP
7	14	14 PIN DIP

3. THE FOLLOWING PIN NUMBERS APPLY TO ECL DIP PACKAGES

GND	-5.2	+5.0V	MANUFACTURES' PART NUMBER
1 16	8	NC	ALL 10,000 SERIES UNLESS OTHERWISE SPECIFIED
1 15 16	8	NC	10110 & 10210
16	8	9	10124 & 10125

NOTE: OLDER REVISIONS OF THIS MODULE HAVE SEPERATE TTL AND ECL GROUND PLANES

GND TTL ——— GND ECL

SLOT	VARIABLE
4AF07	K=00
4AF08	K=01

6 OF 6

"THIS DRAWING AND SPECIFICATIONS, HEREIN, ARE THE PROPERTY OF DIGITAL EQUIPMENT CORPORATION AND SHALL NOT BE REPRODUCED OR COPIED OR USED IN WHOLE OR IN PART AS THE BASIS FOR THE MANUFACTURE OR SALE OF ITEMS WITHOUT WRITTEN PERMISSION. COPYRIGHT © 1977, DIGITAL EQUIPMENT CORPORATION"

REVISIONS		
CHK	CHANGE NO.	REV

digital

DRN. L. Landry DATE 28-JAN-77
CHK. DATE
ENG. DATE
BOARD LOCATION:
SHEET 1 OF 1
M106ER.DRW[4,547] 06-JAN-77 11:50
NEXT HIGHER ASSEMBLY: B-DD-M8519-0
FIRST USED ON OPTION/MODEL: KL10

TITLE: INT MEM BUS TRANSLATOR

SIZE	CODE	NUMBER	REV.
D	CS	M8519-0-MT06	B

101

RESISTOR LOC(PIN)	SHOWN ON DRW#	REF	VALUE	TERMINATES SIGNAL
R129(1)	MT02	B2	68Ω	%E10(1)
R124(1)	MT03	D7	68Ω	%E10(12)
R126(1)	MT03	D7	68Ω	%E10(13)
R125(1)	MT03	D7	68Ω	%E10(14)
R123(1)	MT03	D7	68Ω	%E10(15)
R128(1)	MT02	A2	68Ω	%E10(2)
R130(1)	MT02	B2	68Ω	%E10(3)
R127(1)	MT02	A2	68Ω	%E10(4)
R114(1)	MT03	B7	68Ω	%E12(1)
R108(1)	MT03	C7	68Ω	%E12(12)
R110(1)	MT03	C7	68Ω	%E12(13)
R109(1)	MT03	C7	68Ω	%E12(14)
R107(1)	MT03	C7	68Ω	%E12(15)
R112(1)	MT03	A7	68Ω	%E12(2)
R113(1)	MT03	B7	68Ω	%E12(3)
R111(1)	MT03	A7	68Ω	%E12(4)
R104(1)	MT02	C4	68Ω	%E13(1)
R100(1)	MT02	B4	68Ω	%E13(12)
R102(1)	MT02	A4	68Ω	%E13(13)
R101(1)	MT02	A4	68Ω	%E13(14)
R99(1)	MT02	B4	68Ω	%E13(15)
R106(1)	MT02	C4	68Ω	%E13(2)
R103(1)	MT02	C4	68Ω	%E13(3)
R105(1)	MT02	C4	68Ω	%E13(4)
R90(1)	MT02	C2	68Ω	%E15(1)
R84(1)	MT02	D2	68Ω	%E15(12)
R86(1)	MT02	D2	68Ω	%E15(13)
R85(1)	MT02	D2	68Ω	%E15(14)
R83(1)	MT02	D2	68Ω	%E15(15)
R88(1)	MT02	C2	68Ω	%E15(2)
R89(1)	MT02	C2	68Ω	%E15(3)
R87(1)	MT02	C2	68Ω	%E15(4)
R80(1)	MT02	D7	68Ω	%E16(1)
R76(1)	MT02	C7	68Ω	%E16(12)
R78(1)	MT02	C7	68Ω	%E16(13)
R77(1)	MT02	C7	68Ω	%E16(14)
R75(1)	MT02	C7	68Ω	%E16(15)
R82(1)	MT02	D7	68Ω	%E16(2)
R79(1)	MT02	D7	68Ω	%E16(3)
R81(1)	MT02	D7	68Ω	%E16(4)

RESISTOR LOC(PIN)	SHOWN ON DRW#	REF	VALUE	TERMINATES SIGNAL
R66(1)	MT02	D4	68Ω	%E18(1)
R60(1)	MT02	A7	68Ω	%E18(12)
R62(1)	MT02	B7	68Ω	%E18(13)
R61(1)	MT02	B7	68Ω	%E18(14)
R59(1)	MT02	A7	68Ω	%E18(15)
R64(1)	MT02	D4	68Ω	%E18(2)
R65(1)	MT02	D4	68Ω	%E18(3)
R63(1)	MT02	D4	68Ω	%E18(4)
R118(1)	MT03	B7	68Ω	%E2(11)
R117(1)	MT03	B7	68Ω	%E2(14)
R116(1)	MT03	A7	68Ω	%E2(15)
R120(1)	MT02	A2	68Ω	%E2(2)
R121(1)	MT03	C7	68Ω	%E2(3)
R119(1)	MT02	A2	68Ω	%E2(5)
R122(1)	MT03	C7	68Ω	%E2(6)
R115(1)	MT03	A7	68Ω	%E2(9)
R94(1)	MT02	C2	68Ω	%E5(11)
R93(1)	MT02	C2	68Ω	%E5(14)
R92(1)	MT02	B2	68Ω	%E5(15)
R96(1)	MT02	B5	68Ω	%E5(2)
R97(1)	MT02	A5	68Ω	%E5(3)
R95(1)	MT02	B5	68Ω	%E5(5)
R98(1)	MT02	A5	68Ω	%E5(6)
R91(1)	MT02	B2	68Ω	%E5(9)
R185(1)	MT01	D6	68Ω	%E50(1)
R182(1)	MT01	D6	68Ω	%E50(12)
R188(1)	MT01	C6	68Ω	%E50(13)
R189(1)	MT01	C6	68Ω	%E50(14)
R183(1)	MT01	D6	68Ω	%E50(15)
R186(1)	MT01	D6	68Ω	%E50(2)
R184(1)	MT01	D6	68Ω	%E50(3)
R187(1)	MT01	D6	68Ω	%E50(4)
R179(1)	MT03	C2	68Ω	%E51(1)
R175(1)	MT03	C2	68Ω	%E51(12)
R177(1)	MT03	B2	68Ω	%E51(13)
R176(1)	MT03	B2	68Ω	%E51(14)
R174(1)	MT03	C2	68Ω	%E51(15)
R180(1)	MT03	A2	68Ω	%E51(2)
R178(1)	MT03	C2	68Ω	%E51(3)
R181(1)	MT03	A2	68Ω	%E51(4)

RESISTOR LOC(PIN)	SHOWN ON DRW#	REF	VALUE	TERMINATES SIGNAL
R165(1)	MT01	B7	68Ω	%E53(1)
R159(1)	MT05	D3	68Ω	%E53(12)
R161(1)	MT05	D3	68Ω	%E53(13)
R160(1)	MT05	D3	68Ω	%E53(14)
R158(1)	MT05	D3	68Ω	%E53(15)
R163(1)	MT01	B7	68Ω	%E53(2)
R164(1)	MT01	B7	68Ω	%E53(3)
R162(1)	MT01	B7	68Ω	%E53(4)
R156(1)	MT03	D4	68Ω	%E54(1)
R151(1)	MT03	D4	68Ω	%E54(12)
R153(1)	MT03	C4	68Ω	%E54(13)
R152(1)	MT03	C4	68Ω	%E54(14)
R150(1)	MT03	D4	68Ω	%E54(15)
R154(1)	MT03	C4	68Ω	%E54(2)
R157(1)	MT03	D4	68Ω	%E54(3)
R155(1)	MT03	C4	68Ω	%E54(4)
R138(1)	MT03	D2	68Ω	%E56(1)
R137(1)	MT03	B4	68Ω	%E56(12)
R136(1)	MT03	A4	68Ω	%E56(13)
R135(1)	MT03	A4	68Ω	%E56(14)
R134(1)	MT03	B4	68Ω	%E56(15)
R140(1)	MT03	D2	68Ω	%E56(2)
R139(1)	MT03	D2	68Ω	%E56(3)
R141(1)	MT03	D2	68Ω	%E56(4)
R190(1)	MT05	C7	68Ω	%E57(11)
R191(1)	MT05	C7	68Ω	%E57(14)
R195(1)	MT01	C7	68Ω	%E57(2)
R192(1)	MT01	D3	68Ω	%E57(3)
R194(1)	MT01	C7	68Ω	%E57(5)
R193(1)	MT01	D3	68Ω	%E57(6)
R168(1)	MT05	C3	68Ω	%E60(11)
R169(1)	MT05	C3	68Ω	%E60(14)
R166(1)	MT01	A7	68Ω	%E60(15)
R173(1)	MT03	B2	68Ω	%E60(2)
R170(1)	MT03	A2	68Ω	%E60(3)
R172(1)	MT03	B2	68Ω	%E60(5)
R171(1)	MT03	A2	68Ω	%E60(6)
R167(1)	MT01	A7	68Ω	%E60(9)
R211(1)	MT01	B6	68Ω	%E61(2)
R144(1)	MT03	A5	68Ω	%E63(11)

RESISTOR LOC(PIN)	SHOWN ON DRW#	REF	VALUE	TERMINATES SIGNAL
R145(1)	MT03	A5	68Ω	%E63(14)
R142(1)	MT03	C2	68Ω	%E63(15)
R148(1)	MT03	C5	68Ω	%E63(2)
R146(1)	MT03	B5	68Ω	%E63(3)
R149(1)	MT03	C5	68Ω	%E63(5)
R147(1)	MT03	B5	68Ω	%E63(6)
R143(1)	MT03	C2	68Ω	%E63(9)
R271(1)	MT01	B3	68Ω	%E65(11)
R270(1)	MT01	B3	68Ω	%E65(14)
R269(1)	MT01	B3	68Ω	%E65(15)
R273(1)	MT01	C3	68Ω	%E65(2)
R274(1)	MT01	C3	68Ω	%E65(3)
R272(1)	MT01	D3	68Ω	%E65(5)
R275(1)	MT01	C3	68Ω	%E65(6)
R268(1)	MT01	B3	68Ω	%E65(9)
R266(1)	MT05	B4	68Ω	%E66(2)
R267(1)	MT05	B4	68Ω	%E66(5)
R257(1)	MT04	C7	68Ω	%E67(1)
R254(1)	MT04	A7	68Ω	%E67(14)
R256(1)	MT04	B7	68Ω	%E67(15)
R255(1)	MT04	B7	68Ω	%E67(2)
R249(1)	MT04	B7	68Ω	%E68(11)
R248(1)	MT04	B7	68Ω	%E68(14)
R247(1)	MT04	C7	68Ω	%E68(15)
R251(1)	MT04	B7	68Ω	%E68(2)
R252(1)	MT04	A7	68Ω	%E68(3)
R250(1)	MT04	C7	68Ω	%E68(5)
R253(1)	MT04	A7	68Ω	%E68(6)
R246(1)	MT04	C7	68Ω	%E68(9)
R238(1)	MT04	D5	68Ω	%E69(1)
R240(1)	MT04	D5	68Ω	%E69(14)
R241(1)	MT04	D5	68Ω	%E69(15)
R239(1)	MT04	D5	68Ω	%E69(2)
R233(1)	MT04	B5	68Ω	%E70(11)
R232(1)	MT04	B5	68Ω	%E70(14)
R231(1)	MT04	C5	68Ω	%E70(15)
R235(1)	MT04	B5	68Ω	%E70(2)
R236(1)	MT04	A5	68Ω	%E70(3)
R234(1)	MT04	C5	68Ω	%E70(5)
R237(1)	MT04	A5	68Ω	%E70(6)

NOTE:

1. ALL TERMINATORS HAVE PIN TWO CONNECTED TO -2.0V AND ARE 5% 1/4WATT UNLESS OTHERWISE SPECIFIED
2. ENTRIES ARE SORTED BY SIGNAL NAME
3. % INDICATES OUTPUT OF DIP LOC AND () INDICATES PIN NUMBER

"THIS DRAWING AND SPECIFICATIONS, HEREIN, ARE THE PROPERTY OF DIGITAL EQUIPMENT CORPORATION AND SHALL NOT BE REPRODUCED OR COPIED OR USED IN WHOLE OR IN PART AS THE BASIS FOR THE MANUFACTURE OR SALE OF ITEMS WITHOUT WRITTEN PERMISSION.
COPYRIGHT © 1976, DIGITAL EQUIPMENT CORPORATION"

REVISIONS		
CHK	CHANGE NO.	REV

digital

DRN. C Smith DATE 22-DEC-76
CHK'D DATE
ENG. DATE 05-JAN-77
BOARD LOCATION:
SHEET 1 OF 2
R85191.DRW[4,121] 22-DEC-76 04:29
NEXT HIGHER ASSEMBLY:
FIRST USED ON OPTION/MODEL: KL10
B-DD-M8519-0

TITLE: INT MEM BUS TRANS TERMINATORS

SIZE	CODE	NUMBER	REV.
D	CS	M8519-0-RES	A

MR

102

RESISTOR LOC(PIN)	SHOWN ON DRW#	REF	VALUE	TERMINATES SIGNAL
R230(1)	MT04	C5	68Ω	%E70(9)
R224(1)	MT04	D3	68Ω	%E71(1)
R223(1)	MT04	D3	68Ω	%E71(14)
R222(1)	MT04	D3	68Ω	%E71(15)
R225(1)	MT04	D3	68Ω	%E71(2)
R214(1)	MT04	D2	68Ω	%E72(11)
R215(1)	MT04	D2	68Ω	%E72(14)
R216(1)	MT04	A2	68Ω	%E72(15)
R219(1)	MT04	B2	68Ω	%E72(2)
R221(1)	MT04	C2	68Ω	%E72(3)
R218(1)	MT04	B2	68Ω	%E72(5)
R220(1)	MT04	C2	68Ω	%E72(6)
R217(1)	MT04	A2	68Ω	%E72(9)
R69(1)	MT02	A7	68Ω	%E8(11)
R70(1)	MT02	A7	68Ω	%E8(14)
R67(1)	MT02	C5	68Ω	%E8(15)
R73(1)	MT02	C7	68Ω	%E8(2)
R72(1)	MT02	B7	68Ω	%E8(3)
R74(1)	MT02	C7	68Ω	%E8(5)
R71(1)	MT02	B7	68Ω	%E8(6)
R68(1)	MT02	C5	68Ω	%E8(9)
R48(1)	MT02	C8	68Ω	MB [K*18+00] H
R47(1)	MT02	B8	68Ω	MB [K*18+01] H
R46(1)	MT02	A8	68Ω	MB [K*18+02] H
R45(1)	MT02	C5	68Ω	MB [K*18+03] H
R51(1)	MT02	B5	68Ω	MB [K*18+04] H
R52(1)	MT02	A5	68Ω	MB [K*18+05] H
R50(1)	MT02	C3	68Ω	MB [K*18+06] H
R49(1)	MT02	B3	68Ω	MB [K*18+07] H
R56(1)	MT02	A3	68Ω	MB [K*18+08] H
R55(1)	MT03	C8	68Ω	MB [K*18+09] H
R54(1)	MT03	B8	68Ω	MB [K*18+10] H
R53(1)	MT03	A8	68Ω	MB [K*18+11] H
R205(1)	MT03	C5	68Ω	MB [K*18+12] H
R204(1)	MT03	B5	68Ω	MB [K*18+13] H
R203(1)	MT03	A5	68Ω	MB [K*18+14] H
R202(1)	MT03	C3	68Ω	MB [K*18+15] H
R209(1)	MT03	B3	68Ω	MB [K*18+16] H
R208(1)	MT03	A3	68Ω	MB [K*18+17] H
R57(1)	MT05	B4	68Ω	MT05 T[K]1\#400\

RESISTOR LOC(PIN)	SHOWN ON DRW#	REF	VALUE	TERMINATES SIGNAL
R133(1)	MT05	B4	68Ω	MT05 T[K]2\#400\
R132(1)	MT05	B4	68Ω	MT05 T[K]3\#400\
R131(1)	MT05	B4	68Ω	MT05 T[K]4\#400\
R199(1)	MT05	B4	68Ω	MT05 T[K]5\#400\
R198(1)	MT05	B4	68Ω	MT05 T[K]6\#400\
R197(1)	MT05	B4	68Ω	MT05 T[K]7\#400\
R201(1)	MT05	B4	68Ω	MT05 T[K]8\#400\
R196(1)	MT05	B4	68Ω	MT05 T[K]9\#400\
R260(1)	MT04	B8	68Ω	PMA [12*K+14] H
R261(1)	MT04	B8	68Ω	PMA [12*K+15] H
R258(1)	MT04	B8	68Ω	PMA [12*K+16] H
R259(1)	MT04	B8	68Ω	PMA [12*K+17] H
R244(1)	MT04	D6	68Ω	PMA [12*K+18] H
R245(1)	MT04	D6	68Ω	PMA [12*K+19] H
R242(1)	MT04	D6	68Ω	PMA [12*K+20] H
R243(1)	MT04	D6	68Ω	PMA [12*K+21] H
R213(1)	MT01	C7	68Ω	[K+1, CLK SBUS CL< H, SPARE CLK H]
R206(1)	MT01	A7	68Ω	[K+1, DATA VALID A OUT H, DATA VALID B OUT H]
R207(1)	MT05	C3	68Ω	[K+1, MB PAR H, SPARE7 H]
R265(1)	MT01	B4	68Ω	[K+1, MEM DIAG L, ~MEM ADR PAR L]
R264(1)	MT01	C4	68Ω	[K+1, MEM RQ 0 H, MEM RQ 3 H]
R262(1)	MT01	C4	68Ω	[K+1, MEM RQ 1 H, MEM RD RQ H]
R263(1)	MT01	B4	68Ω	[K+1, MEM RQ 2 H, MEM WR RQ H]
R226(1)	MT04	D4	68Ω	[K+1, MEM SPARE 33 H, MEM SPARE32 H]
R210(1)	MT05	C7	68Ω	[K+1, MEM SPARE H, DIAG MEM RESET H]
R212(1)	MT01	D4	68Ω	[K+1, MEM START A H, MEM START B H]
R228(1)	MT04	D4	68Ω	[K+1, PMA 22 H, SBUS ADR 34 H]
R229(1)	MT04	D4	68Ω	[K+1, PMA 23 H, SBUS ADR 35 H]
R22 (1)	MT04	D4	68Ω	[K+1, PMA 24 H, PMA 25 H]
R200(1)	MT04	B8	68Ω	[K+1, SBUS ADR HOLD H, MT04 TERM 12]
R58(1)	MT05	B4	68Ω	[K+1, SPARE50 H, MEM DATA TO MEM H]

NOTE:

1. ALL TERMINATOR HAVE PIN TWO CONNECTED TO -2.0V AND ARE 5% 1/4WATT UNLESS OTHERWISE SPECIFIED
2. ENTRIES ARE SORTED BY SIGNAL NAME
3. % INDICATES OUTPUT OF DIP LOC AND
   () INDICATES PIN NUMBER

"THIS DRAWING AND SPECIFICATIONS, HEREIN, ARE THE PROPERTY OF DIGITAL EQUIPMENT COR-ORATION AND SHALL NOT BE REPRODUCED OR COPIED OR USED IN WHOLE OR IN PART AS THE BASIS FOR THE MANUFACTURE OR SALE OF ITEMS WITHOUT WRITTEN PER ISSION.
COPY.IGHT © 1976, DIGITAL EQUIPMENT CORPOR-TION"

REVISIONS		
CHK	CHA GE NO.	REV

digital

DRN. E Smith DATE 22-DEC-76
CHK'D DATE 1/3/77
R85192.DRW[4,121] 27-DEC-76 04:29
FIRST USED ON OPTION/MODEL: KL10

ENG. J S Allen DATE 25 Jan 77
BOARD LOCATION:
SHEET 2 OF 2
NEXT HIGHER ASSEM LY: B-DD-M8519-0

TITLE: INT MEM BUS TRANS TERMINATORS

SIZE	CODE	NUMBER	REV.
D	CS	M8519-0-RES	A

NR

103

SIZE	CODE	NUMBER	REV.
B	DD	M852Ø-YA	

DRAWING NO.	NO. OF SHTS	PART NO.	DESCRIPTION	REVISIONS
			MODULE REVISION	A
D-UA-M852Ø-YA-Ø	5		PAGING BOARD	-
D-CS-M852Ø-YA-PAG1	1		PAGE TABLE DATA PT ACCESS-PT 17	-
D-CS-M852Ø-YA-PAG2	1		PAGE TABLE DATA PT 16-PT 26	-
D-CS-M852Ø-YA-PAG3	1		PAGE TABLE DIRECTORY	-
D-CS-M852Ø-YA-PAG4	1		PAGE TABLE CONTROL LOGIC	-
D-CS-M852Ø-YA-PAG5	1		PAGE TABLE PARITY LOGIC	-
D-CS-M852Ø-YA-PAG6	1		PAGING BOARD POWER, GND, CAP	-
D-CS-M852Ø-YA-RES	2		PAGING BOARD TERMINATORS	-
D-AH-M852Ø-Ø-5	4		PAGING BOARD	A
		5010641	ETCHED CIRCUIT BOARD	B
M852Ø-Ø-L	-		P.C. DESIGN DATA BASE	REF
M852Ø-YA-PL	-		INSERTION P/L DATA BASE	REF
POO-M852Ø-YA	-		PROCESS SHEETS	REF

NOTES:

REVISIONS	REV.	CHG NO.	DATE

"THIS DRAWING AND SPECIFICATIONS, HEREIN, ARE THE PROPERTY OF DIGITAL EQUIPMENT CORPORATION AND SHALL NOT BE REPRODUCED OR COPIED OR USED IN WHOLE OR IN PART AS THE BASIS FOR THE MANUFACTURE OR SALE OF ITEMS WITHOUT WRITTEN PERMISSION.
COPYRIGHT © 1976, DIGITAL EQUIPMENT CORPORATION"

digital

USED ON OPTION/MODEL	
KL1Ø	

DRN.	K W Counter	25OCT76
CHK'D	[illegible]	29OCT76
ENG.	J. P. Ellis	11 JAN 77
PROD.	W. Epley	11/1/77

TITLE: PAGING BOARD

SIZE	CODE	NUMBER	REV.
B	DD	M852Ø-YA	

SHEET 1 OF 1

DRB 126 EN-01149-16-N176(325)

MR

104

"THIS DRAWING AND SPECIFICATIONS, HEREIN, ARE THE PROPERTY OF DIGITAL EQUIPMENT CORPORATION AND SHALL NOT BE REPRODUCED OR COPIED OR USED IN WHOLE OR IN PART AS THE BASIS FOR THE MANUFACTURE OR SALE OF ITEMS WITHOUT WRITTEN PERMISSION. COPYRIGHT © 1976 DIGITAL EQUIPMENT CORPORATION"

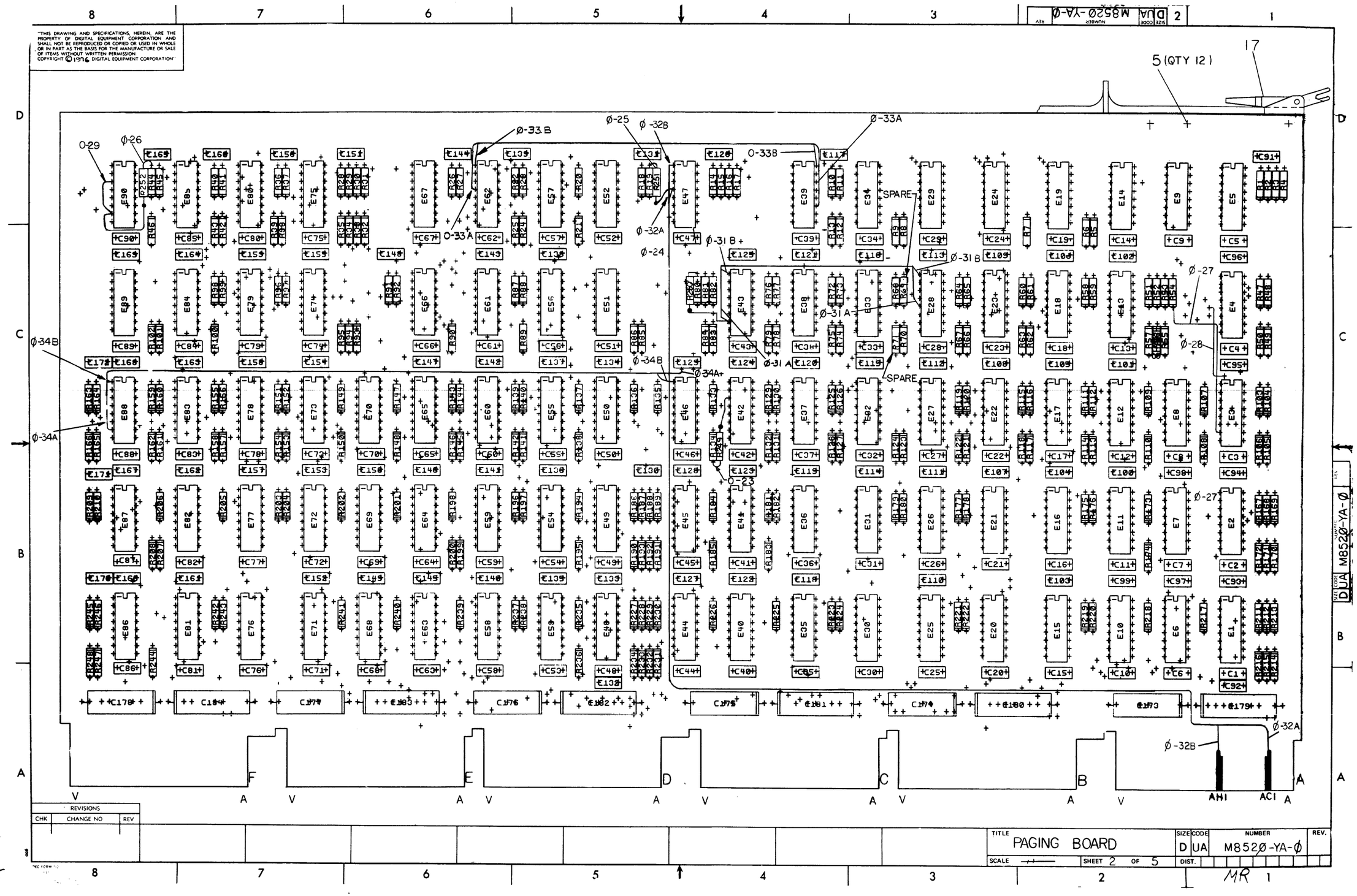

REVISIONS		
CHK	CHANGE NO	REV

TITLE	SIZE	CODE	NUMBER	REV.
PAGING BOARD	D	UA	M8520-YA-Ø	
SCALE —	SHEET 2 OF 5	DIST.		

105 MR

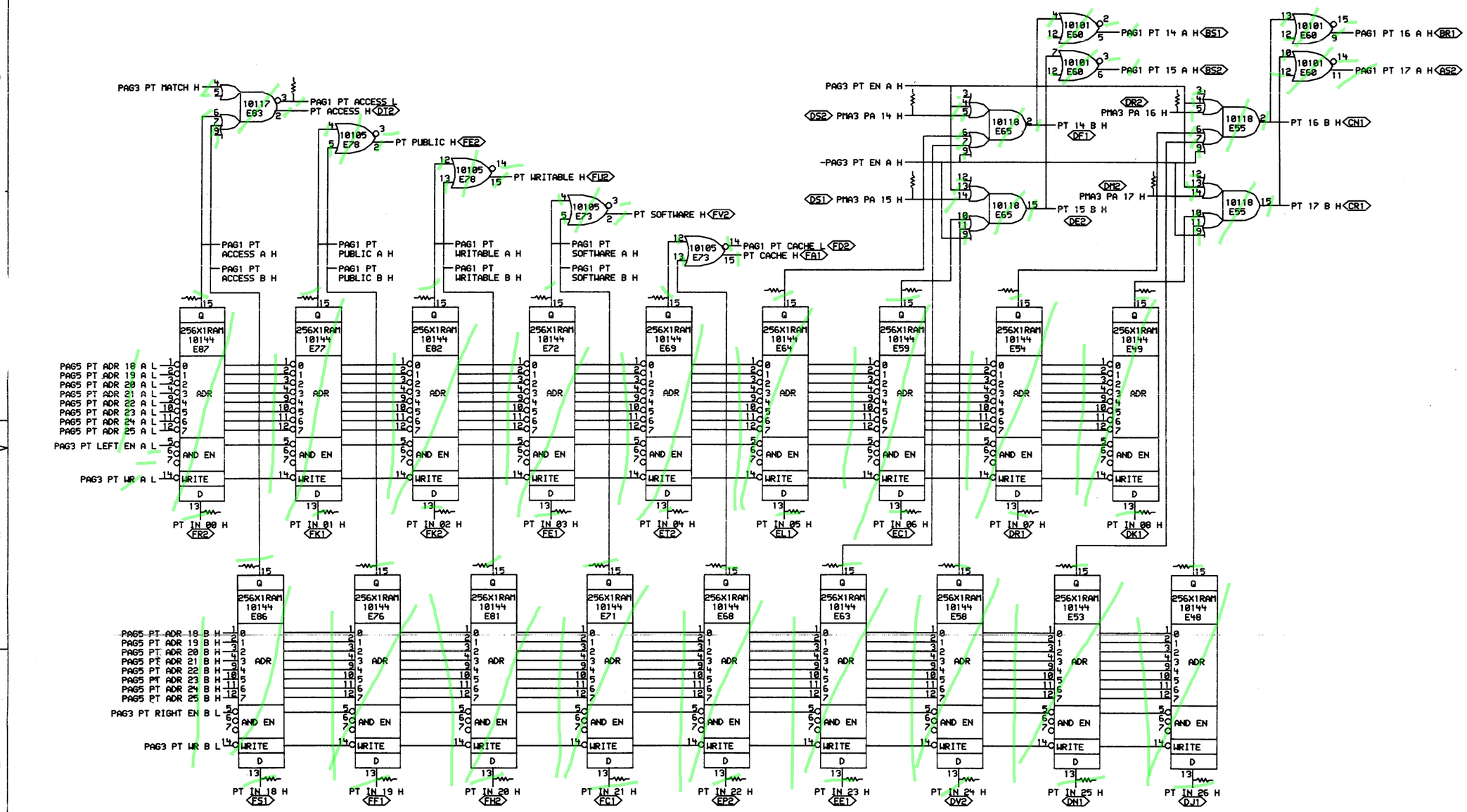

1 OF 6

"THIS DRAWING AND SPECIFICATIONS, HEREIN, ARE THE PROPERTY OF DIGITAL EQUIPMENT CORPORATION AND SHALL NOT BE REPRODUCED OR COPIED OR USED IN WHOLE OR IN PART AS THE BASIS FOR THE MANUFACTURE OR SALE OF ITEMS WITHOUT WRITTEN PERMISSION. COPYRIGHT © 1977, DIGITAL EQUIPMENT CORPORATION"

REVISIONS		
CHK	CHANGE NO.	REV

digital

DRN: 04-JAN-77 | ENG: 11/04/77 | DATE | TITLE: PAGE TABLE DATA PT ACCESS-PT 17

CHK: 11/5/77 | BOARD LOCATION: 4AE30 | SHEET 1 OF 1

PAGTEF.DRW[4,551] 04-JAN-77 07:49 | NEXT HIGHER ASSEMBLY: B-DD-M8520-YA

FIRST USED ON OPTION/MODEL: KL10PV

SIZE	CODE	NUMBER	REV.
D	CS	M8520-YA-PAG1	

106

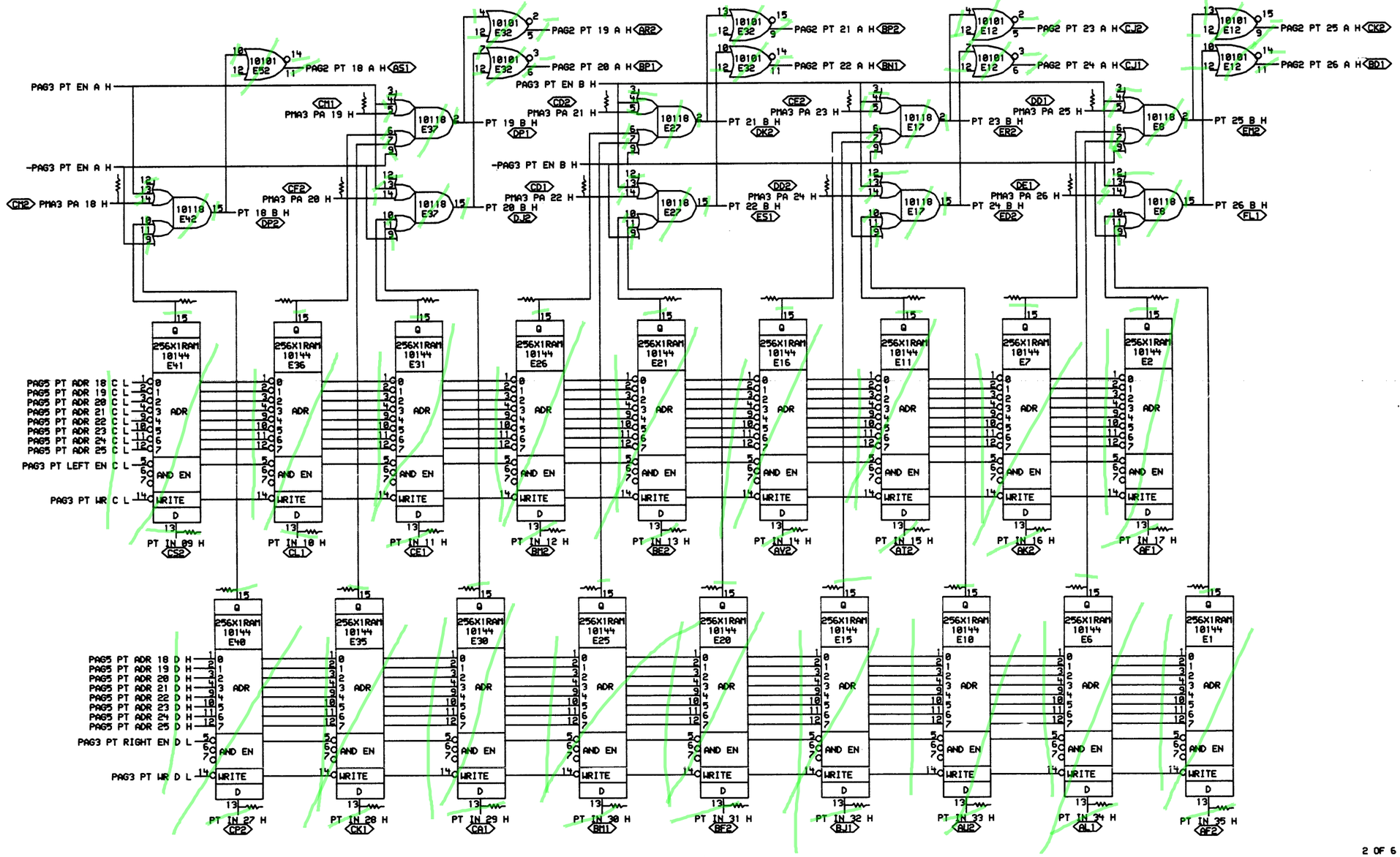

2 OF 6

"THIS DRAWING AND SPECIFICATIONS, HEREIN, ARE THE PROPERTY OF DIGITAL EQUIPMENT CORPORATION AND SHALL NOT BE REPRODUCED OR COPIED OR USED IN WHOLE OR IN PART AS THE BASIS FOR THE MANUFACTURE OR SALE OF ITEMS WITHOUT WRITTEN PERMISSION.
COPYRIGHT © 1977, DIGITAL EQUIPMENT CORPORATION"

REVISIONS		
CHK	CHANGE NO.	REV

digital

DRN: J. Fossler DATE 04-JAN-77
DSN: D. Stephenson DATE 11-JAN-77
ENG: J. L. Allen DATE 11-JAN-77
BOARD LOCATION: 4AE30
SHEET 1 OF 1
NEXT HIGHER ASSEMBLY: B-DD-M8520-YA
FIRST USED ON OPTION/MODEL: KL10PV
PAGEF.DRW[4,551] 12-DEC-76 06:22

TITLE: PAGE TABLE DATA PT 16 - PT 26

SIZE	CODE	NUMBER	REV.
D	CS	M8520-YA-PAG2	

MR1

107

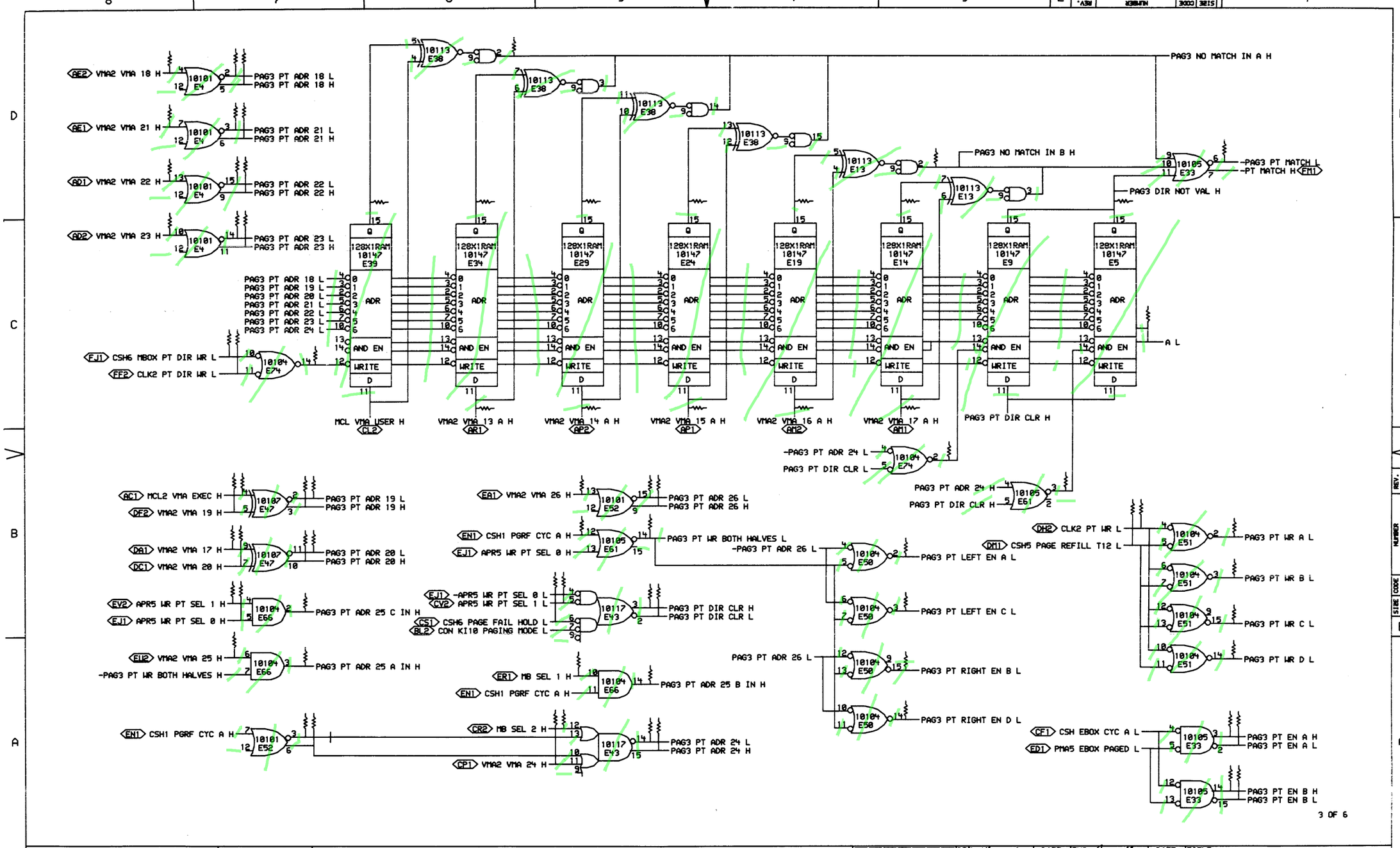

"THIS DRAWING AND SPECIFICATIONS, HEREIN, ARE THE PROPERTY OF DIGITAL EQUIPMENT CORPORATION AND SHALL NOT BE REPRODUCED OR COPIED OR USED IN WHOLE OR IN PART AS THE BASIS FOR THE MANUFACTURE OR SALE OF ITEMS WITHOUT WRITTEN PERMISSION. COPYRIGHT © 1977, DIGITAL EQUIPMENT CORPORATION"

REVISIONS		
CHK	CHANGE NO.	REV

digital

DRN. Hoody DATE 04-JAN-77 ENG. J.P. Allen DATE 11-JAN-77
CHK'D Stephens DATE 1/5/77 BOARD LOCATION: YAF30
SHEET 1 OF 1
PAG3EF.DRW[4,551] 21-DEC-76 06:49 NEXT HIGHER ASSEMBLY: B-DD-M8520-YA
FIRST USED ON OPTION/MODEL: KL10PV

TITLE: PAGE TABLE DIRECTORY

SIZE	CODE	NUMBER	REV.
D	CS	M8520-YA-PAG3	

MR 1

108

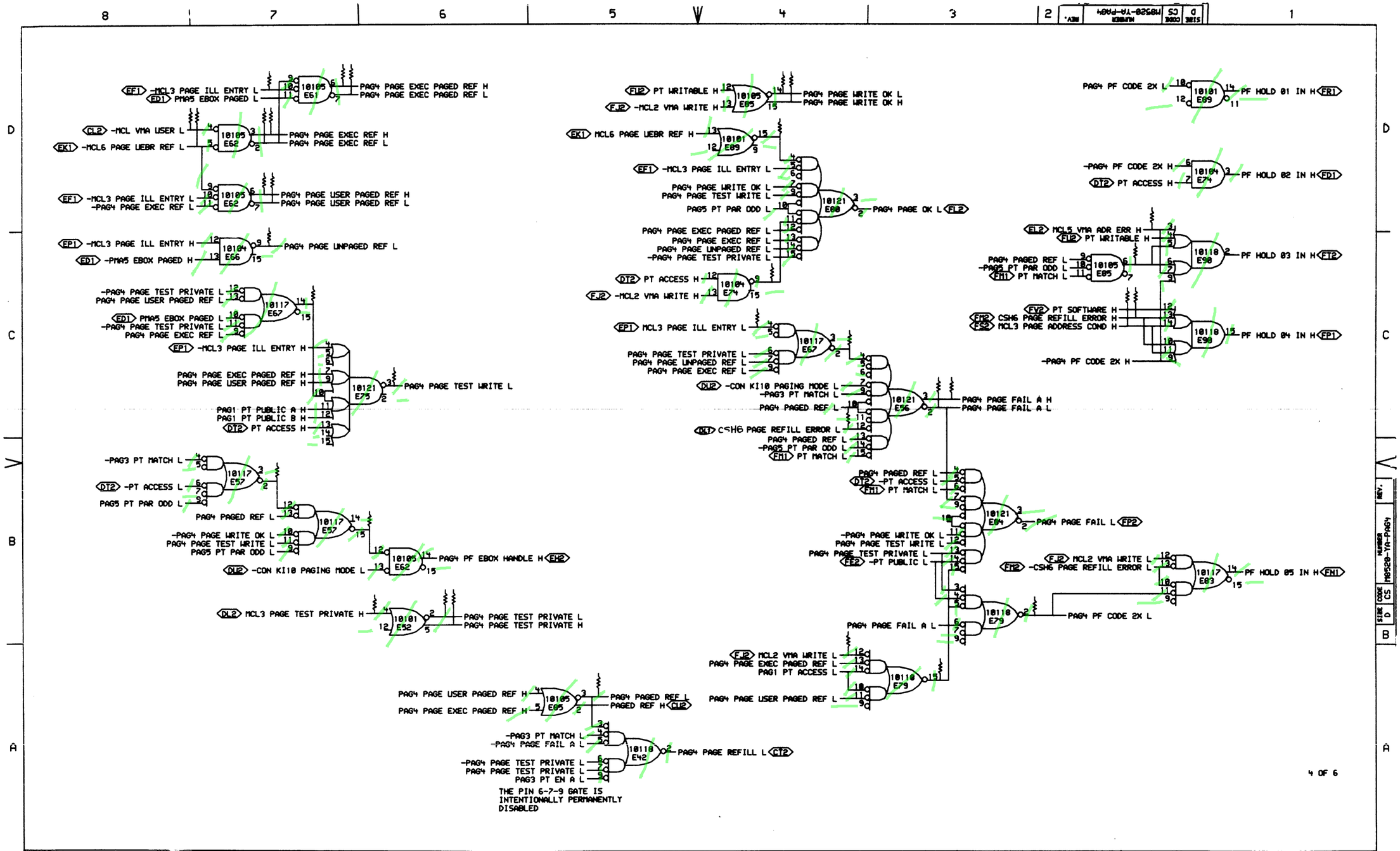

"THIS DRAWING AND SPECIFICATIONS, HEREIN, ARE THE PROPERTY OF DIGITAL EQUIPMENT CORPORATION AND SHALL NOT BE REPRODUCED OR COPIED OR USED IN WHOLE OR IN PART AS THE BASIS FOR THE MANUFACTURE OR SALE OF ITEMS WITHOUT WRITTEN PERMISSION.
COPYRIGHT © 1977, DIGITAL EQUIPMENT CORPORATION"

REVISIONS		
CHK	CHANGE NO.	REV

digital

DRW. DATE 04-JAN-77 ENG. DATE 11-Jan-77
DATE BOARD LOCATION: 4AF30
SHEET 1 OF 1
PAGEF.DRW[4,551] 04-JAN-77 00:34 NEXT HIGHER ASSEMBLY:
FIRST USED ON OPTION/MODEL: KL10PV B-DD-M8520-YA

TITLE: PAGE TABLE CONTROL LOGIC

SIZE	CODE	NUMBER	REV.
D	CS	M8520-YA-PAG4	

109

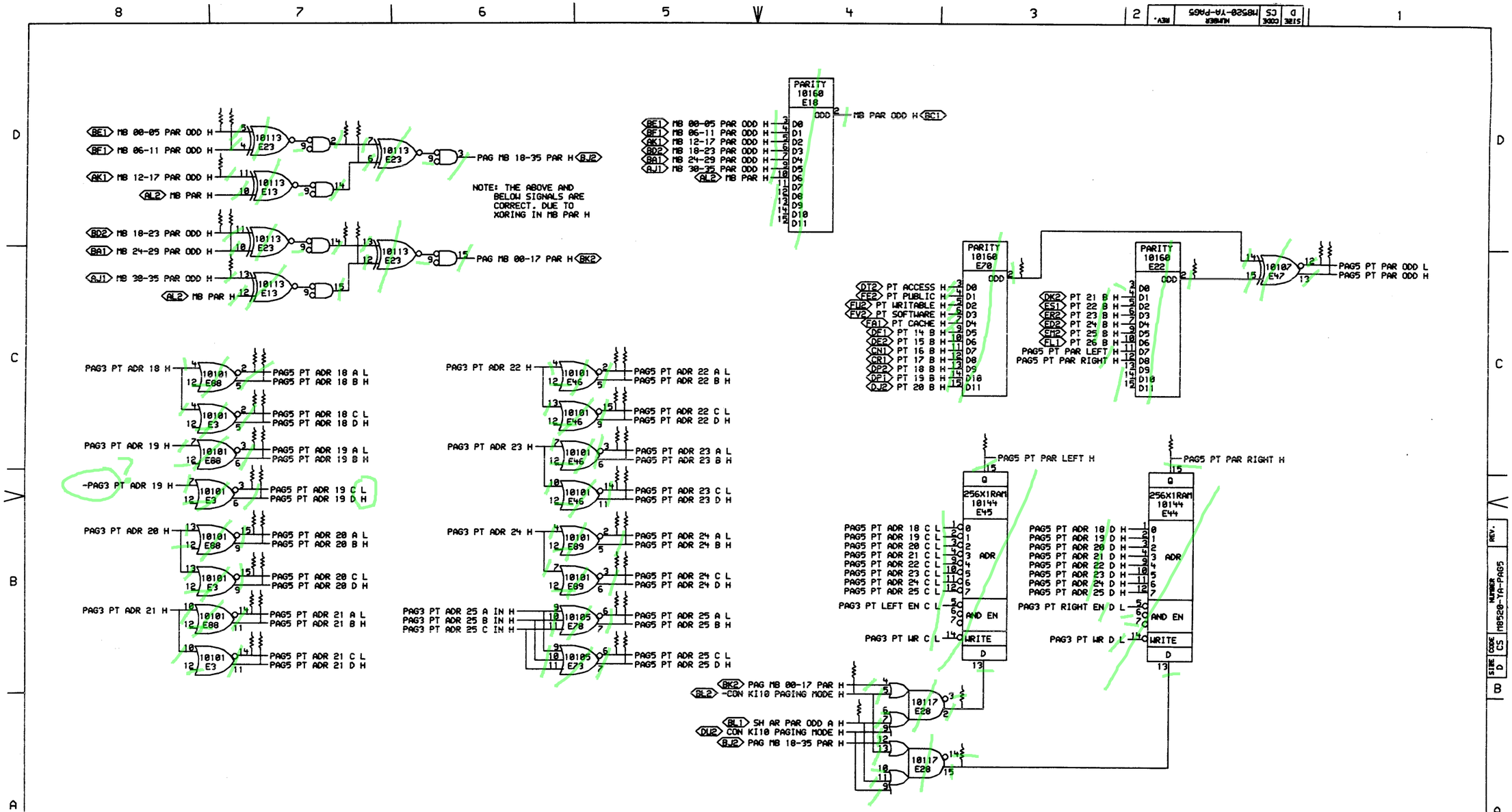

"THIS DRAWING AND SPECIFICATIONS, HEREIN, ARE THE PROPERTY OF DIGITAL EQUIPMENT CORPORATION AND SHALL NOT BE REPRODUCED OR COPIED OR USED IN WHOLE OR IN PART AS THE BASIS FOR THE MANUFACTURE OR SALE OF ITEMS WITHOUT WRITTEN PERMISSION. COPYRIGHT © 1977, DIGITAL EQUIPMENT CORPORATION"

REVISIONS		
CHK	CHANGE NO.	REV

digital

DRN DATE 04-JAN-77 ENG. DATE 11 Jan 77 TITLE: PAGE TABLE PARITY LOGIC

DATE 1/3/77 BOARD LOCATION: 4DF30 SHEET 1 OF 1

PAGSEF.DRW[4,551] 04-JAN-77 13:05 NEXT HIGHER ASSEMBLY:

FIRST USED ON OPTION/MODEL: KL10PV B-DD-M8520-YA

SIZE	CODE	NUMBER	REV.
D	CS	M8520-YA-PAG5	

110

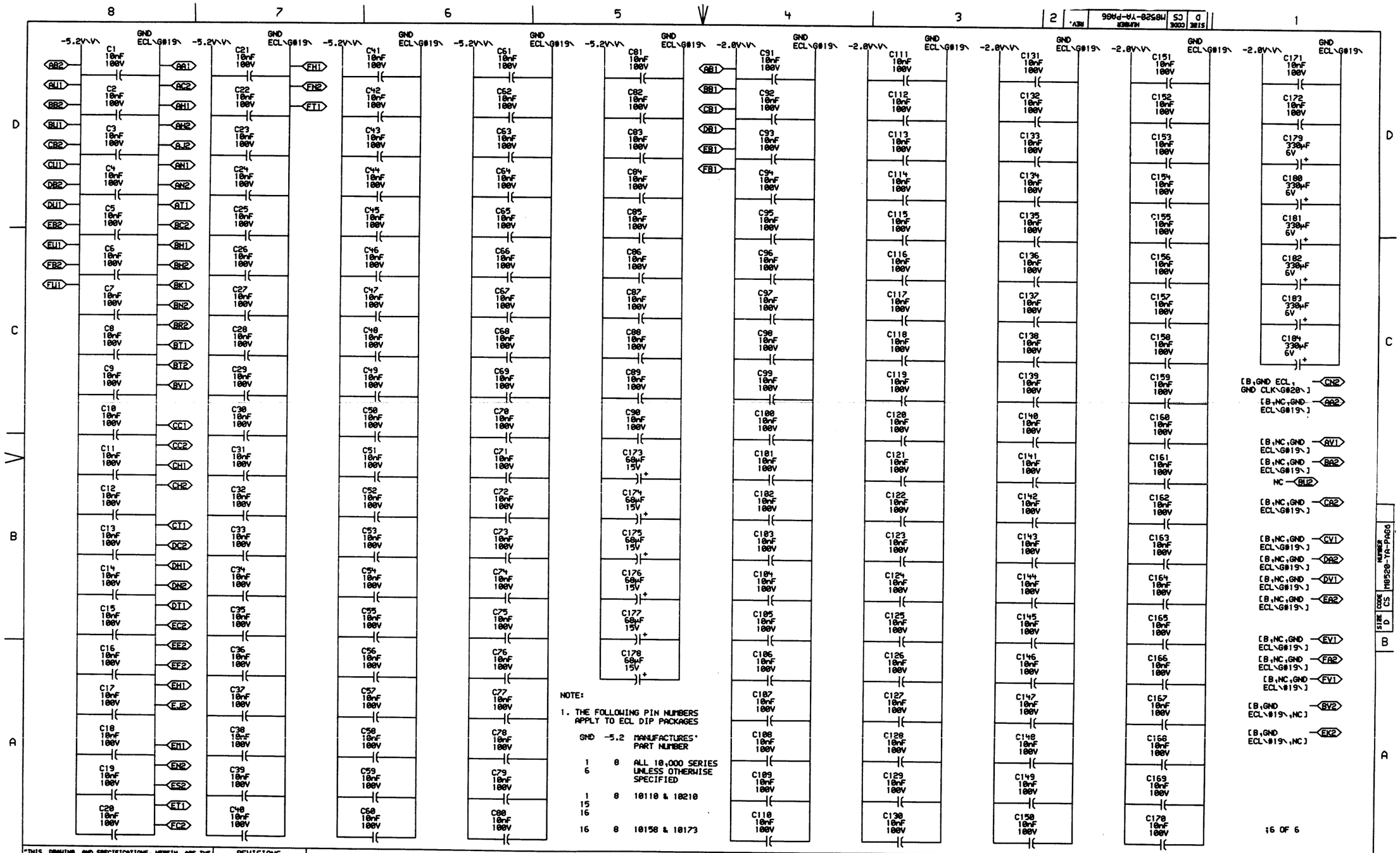

NOTE:

1. THE FOLLOWING PIN NUMBERS APPLY TO ECL DIP PACKAGES

GND	-5.2	MANUFACTURES' PART NUMBER
1 6	8	ALL 10,000 SERIES UNLESS OTHERWISE SPECIFIED
1 15 16	8	10110 & 10210
16	8	10158 & 10173

"THIS DRAWING AND SPECIFICATIONS, HEREIN, ARE THE PROPERTY OF DIGITAL EQUIPMENT CORPORATION AND SHALL NOT BE REPRODUCED OR COPIED OR USED IN WHOLE OR IN PART AS THE BASIS FOR THE MANUFACTURE OR SALE OF ITEMS WITHOUT WRITTEN PERMISSION.
COPYRIGHT © 1977, DIGITAL EQUIPMENT CORPORATION"

REVISIONS		
CHK	CHANGE NO.	REV

digital

DRN: [illegible] DATE 04-JAN-77
CHK'D: [illegible] DATE 1/3/77
ENG. A.D. Allen DATE 1/4/77
PAGGEF.DRW[4,551] 02-SEP-76 10:49
BOARD LOCATION: 4RF38
SHEET 1 OF 1
NEXT HIGHER ASSEMBLY: B-DD-M8520-YA
FIRST USED ON OPTION/MODEL: KL10PV

TITLE: PAGING BOARD POWER, GND, CAP

SIZE	CODE	NUMBER	REV.
D	CS	M8520-YA-PAG6	

MR 1

STEPHENSON, PAGGEF.DPI[4,551], SCALE 2, "D" RELEASE

RESISTOR LOC(PIN)	SHOWN ON DRW#	REF	VALUE	TERMINATES SIGNAL
R104(1)	PAG2	B2	68Ω	%E1(15)
R113(1)	PAG2	B3	68Ω	%E10(15)
R114(1)	PAG2	C3	68Ω	%E11(15)
R67(1)	PAG5	D7	68Ω	%E13(14)
R60(1)	PAG5	C7	68Ω	%E13(15)
R57(1)	PAG3	D3	68Ω	%E14(15)
R117(1)	PAG2	B4	68Ω	%E15(15)
R111(1)	PAG2	C4	68Ω	%E16(15)
R59(1)	PAG3	D4	68Ω	%E19(15)
R106(1)	PAG2	C2	68Ω	%E2(15)
R121(1)	PAG2	B4	68Ω	%E20(15)
R122(1)	PAG2	C5	68Ω	%E21(15)
R17(1)	PAG5	C2	68Ω	%E22(2)
R61(1)	PAG5	C7	68Ω	%E23(14)
R66(1)	PAG5	D7	68Ω	%E23(2)
R73(1)	PAG3	D5	68Ω	%E24(15)
R124(1)	PAG2	B5	68Ω	%E25(15)
R123(1)	PAG2	C5	68Ω	%E26(15)
R226(1)	PAG5	A3	68Ω	%E28(15)
R183(1)	PAG5	A3	68Ω	%E28(2)
R72(1)	PAG3	D5	68Ω	%E29(15)
R126(1)	PAG2	B6	68Ω	%E30(15)
R128(1)	PAG2	C6	68Ω	%E31(15)
R78(1)	PAG3	D6	68Ω	%E34(15)
R127(1)	PAG2	B6	68Ω	%E35(15)
R131(1)	PAG2	C7	68Ω	%E36(15)
R77(1)	PAG3	D6	68Ω	%E39(15)
R129(1)	PAG2	B7	68Ω	%E40(15)
R132(1)	PAG2	C7	68Ω	%E41(15)
R196(1)	PAG1	B2	68Ω	%E48(15)
R142(1)	PAG1	C2	68Ω	%E49(15)
R84(1)	PAG3	A7	68Ω	%E52(3)
R79(1)	PAG3	A7	68Ω	%E52(6)
R141(1)	PAG1	B3	68Ω	%E53(15)
R89(1)	PAG1	C3	68Ω	%E54(15)
R22(1)	PAG4	B6	68Ω	%E57(15)
R23(1)	PAG4	B7	68Ω	%E57(2)
R144(1)	PAG1	B3	68Ω	%E58(15)
R146(1)	PAG1	C4	68Ω	%E59(15)
R110(1)	PAG2	B3	68Ω	%E6(15)

RESISTOR LOC(PIN)	SHOWN ON DRW#	REF	VALUE	TERMINATES SIGNAL
R2(1)	PAG3	B2	68Ω	%E61(3)
R148(1)	PAG1	B4	68Ω	%E63(15)
R150(1)	PAG1	C4	68Ω	%E64(15)
R35(1)	PAG4	C7	68Ω	%E67(14)
R87(1)	PAG4	C4	68Ω	%E67(2)
R154(1)	PAG1	B5	68Ω	%E68(15)
R153(1)	PAG1	C5	68Ω	%E69(15)
R108(1)	PAG2	C3	68Ω	%E7(15)
R16(1)	PAG5	C3	68Ω	%E70(2)
R1(1)	PAG3	C7	68Ω	%E74(14)
R52(1)	PAG3	B3	68Ω	%E74(2)
R33(1)	PAG4	C4	68Ω	%E74(9)
R99(1)	PAG4	A3	68Ω	%E79(15)
R46(1)	PAG4	C2	68Ω	%E85(6)
R36(1)	PAG4	D4	68Ω	%E89(15)
R3(1)	PAG3	C2	68Ω	-A H
R80(1)	PAG3	B7	68Ω	APR5 WR PT SEL 0 H
R92(1)	PAG3	B7	68Ω	APR5 WR PT SEL 1 H
R81(1)	PAG3	B5	68Ω	-APR5 WR PT SEL 1 H
R94(1)	PAG3	C7	68Ω	-CLK2 PT DIR WR H
R85(1)	PAG3	B2	68Ω	-CLK2 PT WR H
R250(1)	PAG5	B4	68Ω	-CON KI10 PAGING MODE H
R21(1)	PAG3	B5	68Ω	CSH1 PGRF CYC A H
R86(1)	PAG3	B2	68Ω	-CSH5 PAGE REFILL T12 H
R95(1)	PAG3	C7	68Ω	-CSH6 MBOX PT DIR WR H
R82(1)	PAG3	B5	68Ω	-CSH6 PAGE FAIL HOLD H
R44(1)	PAG4	C2	68Ω	CSH6 PAGE REFILL ERROR H
R88(1)	PAG4	C4	68Ω	-CSH6 PAGE REFILL ERROR H
R65(1)	PAG5	D7	68Ω	MB 00-05 PAR ODD H
R64(1)	PAG5	D7	68Ω	MB 06-11 PAR ODD H
R58(1)	PAG5	D7	68Ω	MB 12-17 PAR ODD H
R62(1)	PAG5	D7	68Ω	MB 18-23 PAR ODD H
R63(1)	PAG5	D7	68Ω	MB 24-29 PAR ODD H
R55(1)	PAG5	C7	68Ω	MB 30-35 PAR ODD H
R90(1)	PAG3	A5	68Ω	MB SEL 1 H
R83(1)	PAG3	A5	68Ω	MB SEL 2 H
R26(1)	PAG4	D7	68Ω	MCL VMA USER H
R251(1)	PAG3	B7	68Ω	MCL2 VMA EXEC H
R41(1)	PAG4	A4	68Ω	-MCL2 VMA WRITE H
R45(1)	PAG4	C2	68Ω	MCL3 PAGE ADDRESS COND H

RESISTOR LOC(PIN)	SHOWN ON DRW#	REF	VALUE	TERMINATES SIGNAL
R100(1)	PAG4	D7	68Ω	MCL3 PAGE ILL ENTRY H
R31(1)	PAG4	C4	68Ω	-MCL3 PAGE ILL ENTRY H
R20(1)	PAG4	B6	68Ω	MCL3 PAGE TEST PRIVATE H
R252(1)	PAG4	D2	68Ω	MCL5 VMA ADR ERR H
R102(1)	PAG4	D7	68Ω	MCL6 PAGE UEBR REF H
R96(1)	PAG1	D7	68Ω	-PAG1 PT ACCESS H
R159(1)	PAG1	C7	68Ω	PAG1 PT ACCESS A H
R161(1)	PAG1	B7	68Ω	PAG1 PT ACCESS B H
R29(1)	PAG1	C7	68Ω	PAG1 PT PUBLIC A H
R28(1)	PAG1	B6	68Ω	PAG1 PT PUBLIC B H
R151(1)	PAG1	C6	68Ω	PAG1 PT SOFTWARE A H
R152(1)	PAG1	B5	68Ω	PAG1 PT SOFTWARE B H
R156(1)	PAG1	C6	68Ω	PAG1 PT WRITABLE A H
R155(1)	PAG1	B6	68Ω	PAG1 PT WRITABLE B H
R68(1)	PAG3	D2	68Ω	PAG3 DIR NOT VAL H
R75(1)	PAG3	D6	68Ω	PAG3 NO MATCH IN A H
R74(1)	PAG3	D3	68Ω	PAG3 NO MATCH IN B H
R164(1)	PAG3	D7	68Ω	PAG3 PT ADR 18 H
R11(1)	PAG3	D7	68Ω	-PAG3 PT ADR 18 H
R166(1)	PAG3	B7	68Ω	PAG3 PT ADR 19 H
R54(1)	PAG3	B7	68Ω	-PAG3 PT ADR 19 H
R163(1)	PAG3	B7	68Ω	PAG3 PT ADR 20 H
R4(1)	PAG3	B7	68Ω	-PAG3 PT ADR 20 H
R165(1)	PAG3	D7	68Ω	PAG3 PT ADR 21 H
R10(1)	PAG3	D7	68Ω	-PAG3 PT ADR 21 H
R136(1)	PAG3	D7	68Ω	PAG3 PT ADR 22 H
R12(1)	PAG3	D7	68Ω	-PAG3 PT ADR 22 H
R135(1)	PAG3	C7	68Ω	PAG3 PT ADR 23 H
R13(1)	PAG3	C7	68Ω	-PAG3 PT ADR 23 H
R101(1)	PAG3	A5	68Ω	PAG3 PT ADR 24 H
R5(1)	PAG3	A5	68Ω	-PAG3 PT ADR 24 H
R204(1)	PAG3	A7	68Ω	PAG3 PT ADR 25 A IN H
R158(1)	PAG3	A5	68Ω	PAG3 PT ADR 25 B IN H
R157(1)	PAG3	B7	68Ω	PAG3 PT ADR 25 C IN H
R197(1)	PAG3	B5	68Ω	PAG3 PT ADR 26 H
R138(1)	PAG3	B5	68Ω	-PAG3 PT ADR 26 H
R53(1)	PAG3	B5	68Ω	PAG3 PT DIR CLR H
R93(1)	PAG3	B5	68Ω	-PAG3 PT DIR CLR H
R149(1)	PAG3	A1	68Ω	PAG3 PT EN A H
R145(1)	PAG3	A1	68Ω	-PAG3 PT EN A H

RESISTOR LOC(PIN)	SHOWN ON DRW#	REF	VALUE	TERMINATES SIGNAL
R107(1)	PAG3	A1	68Ω	PAG3 PT EN B H
R105(1)	PAG3	A1	68Ω	-PAG3 PT EN B H
R210(1)	PAG3	B3	68Ω	-PAG3 PT LEFT EN A H
R174(1)	PAG3	B3	68Ω	-PAG3 PT LEFT EN C H
R160(1)	PAG3	D1	68Ω	PAG3 PT MATCH H
R246(1)	PAG3	A3	68Ω	-PAG3 PT RIGHT EN B H
R217(1)	PAG3	A3	68Ω	-PAG3 PT RIGHT EN D H
R207(1)	PAG3	B1	68Ω	-PAG3 PT WR A H
R244(1)	PAG3	B1	68Ω	-PAG3 PT WR B H
R137(1)	PAG3	B5	68Ω	-PAG3 PT WR BOTH HALVES H
R169(1)	PAG3	B1	68Ω	-PAG3 PT WR C H
R213(1)	PAG3	A1	68Ω	-PAG3 PT WR D H
R42(1)	PAG4	D7	68Ω	PAG4 PAGE EXEC PAGED REF H
R30(1)	PAG4	D7	68Ω	-PAG4 PAGE EXEC PAGED REF H
R27(1)	PAG4	D7	68Ω	PAG4 PAGE EXEC REF H
R34(1)	PAG4	D7	68Ω	-PAG4 PAGE EXEC REF H
R133(1)	PAG4	C3	68Ω	PAG4 PAGE FAIL A H
R98(1)	PAG4	C3	68Ω	-PAG4 PAGE FAIL A H
R32(1)	PAG4	B6	68Ω	PAG4 PAGE TEST PRIVATE H
R134(1)	PAG4	B6	68Ω	-PAG4 PAGE TEST PRIVATE H
R25(1)	PAG4	C6	68Ω	-PAG4 PAGE TEST WRITE H
R30(1)	PAG4	C7	68Ω	-PAG4 PAGE UNPAGED REF H
R40(1)	PAG4	D7	68Ω	PAG4 PAGE USER PAGED REF H
R97(1)	PAG4	D7	68Ω	-PAG4 PAGE USER PAGED REF H
R24(1)	PAG4	D4	68Ω	PAG4 PAGE WRITE OK H
R37(1)	PAG4	D4	68Ω	-PAG4 PAGE WRITE OK H
R249(1)	PAG4	A5	68Ω	-PAG4 PAGED REF H
R162(1)	PAG4	B3	68Ω	-PAG4 PF CODE 2X H
R192(1)	PAG5	C7	68Ω	-PAG5 PT ADR 18 A H
R190(1)	PAG5	C7	68Ω	PAG5 PT ADR 18 B H
R189(1)	PAG5	C7	68Ω	-PAG5 PT ADR 18 C H
R227(1)	PAG5	C7	68Ω	PAG5 PT ADR 18 D H
R188(1)	PAG5	C7	68Ω	-PAG5 PT ADR 19 A H
R232(1)	PAG5	C7	68Ω	PAG5 PT ADR 19 B H
R184(1)	PAG5	B7	68Ω	-PAG5 PT ADR 19 C H
R228(1)	PAG5	B7	68Ω	PAG5 PT ADR 19 D H
R193(1)	PAG5	B7	68Ω	-PAG5 PT ADR 20 A H
R233(1)	PAG5	B7	68Ω	PAG5 PT ADR 20 B H
R191(1)	PAG5	B7	68Ω	-PAG5 PT ADR 20 C H
R229(1)	PAG5	B7	68Ω	PAG5 PT ADR 20 D H

NOTE:

1. ALL TERMINATORS HAVE PIN TWO CONNECTED TO -2.0V AND ARE 5% 1/4WATT UNLESS OTHERWISE SPECIFIED
2. ENTRIES ARE SORTED BY SIGNAL NAME
3. % INDICATES OUTPUT OF DIP LOC AND () INDICATES PIN NUMBER

"THIS DRAWING AND SPECIFICATIONS, HEREIN, ARE THE PROPERTY OF DIGITAL EQUIPMENT CORPORATION AND SHALL NOT BE REPRODUCED OR COPIED OR USED IN WHOLE OR IN PART AS THE BASIS FOR THE MANUFACTURE OR SALE OF ITEMS WITHOUT WRITTEN PERMISSION.
COPYRIGHT © 1977, DIGITAL EQUIPMENT CORPORATION"

REVISIONS		
CHK	CHANGE NO.	REV

digital

DRW. DATE 04-JAN-77 ENG. DATE 11-JAN-77
CHK. DATE 11/6/77 BOARD LOCATION: SHEET 1 OF 2
F85201.DRWC4.5513 04-JAN-77 15:45 NEXT HIGHER ASSEMBLY:
FIRST USED ON OPTION/MODEL: KL10-PV B-DD-M8520-YA

TITLE: PAGING TERMINATORS

SIZE	CODE	NUMBER	REV.
D	CS	M8520-YA-RES	

MR 1

112

RESISTOR LOC(PIN)	SHOWN ON DRW#	REF	VALUE	TERMINATES SIGNAL
R187(1)	PAG5	B7	68Ω	-PAG5 PT ADR 21 A H
R235(1)	PAG5	B7	68Ω	PAG5 PT ADR 21 B H
R185(1)	PAG5	B7	68Ω	-PAG5 PT ADR 21 C H
R230(1)	PAG5	B7	68Ω	PAG5 PT ADR 21 D H
R209(1)	PAG5	C5	68Ω	-PAG5 PT ADR 22 A H
R248(1)	PAG5	C5	68Ω	PAG5 PT ADR 22 B H
R170(1)	PAG5	C5	68Ω	-PAG5 PT ADR 22 C H
R215(1)	PAG5	C5	68Ω	PAG5 PT ADR 22 D H
R208(1)	PAG5	C5	68Ω	-PAG5 PT ADR 23 A H
R247(1)	PAG5	C5	68Ω	PAG5 PT ADR 23 B H
R172(1)	PAG5	B5	68Ω	-PAG5 PT ADR 23 C H
R216(1)	PAG5	B5	68Ω	PAG5 PT ADR 23 D H
R195(1)	PAG5	B5	68Ω	-PAG5 PT ADR 24 A H
R234(1)	PAG5	B5	68Ω	PAG5 PT ADR 24 B H
R171(1)	PAG5	B5	68Ω	-PAG5 PT ADR 24 C H
R214(1)	PAG5	B5	68Ω	PAG5 PT ADR 24 D H
R186(1)	PAG5	B5	68Ω	-PAG5 PT ADR 25 A H
R236(1)	PAG5	B5	68Ω	PAG5 PT ADR 25 B H
R167(1)	PAG5	B5	68Ω	-PAG5 PT ADR 25 C H
R211(1)	PAG5	B5	68Ω	PAG5 PT ADR 25 D H
R118(1)	PAG5	C3	68Ω	PAG5 PT PAR LEFT H
R43(1)	PAG5	C1	68Ω	PAG5 PT PAR ODD H
R39(1)	PAG5	C1	68Ω	-PAG5 PT PAR ODD H
R115(1)	PAG5	C2	68Ω	PAG5 PT PAR RIGHT H
R147(1)	PAG1	D4	68Ω	PMA3 PA 14 H
R143(1)	PAG1	C4	68Ω	PMA3 PA 15 H
R139(1)	PAG1	D2	68Ω	PMA3 PA 16 H
R140(1)	PAG1	C2	68Ω	PMA3 PA 17 H
R102(1)	PAG2	C7	68Ω	PMA3 PA 18 H
R130(1)	PAG2	D6	68Ω	PMA3 PA 19 H
R125(1)	PAG2	C6	68Ω	PMA3 PA 20 H
R119(1)	PAG2	D5	68Ω	PMA3 PA 21 H
R120(1)	PAG2	C5	68Ω	PMA3 PA 22 H
R116(1)	PAG2	D4	68Ω	PMA3 PA 23 H
R112(1)	PAG2	C4	68Ω	PMA3 PA 24 H
R109(1)	PAG2	D2	68Ω	PMA3 PA 25 H
R103(1)	PAG2	C3	68Ω	PMA3 PA 26 H
R206(1)	PAG1	B7	68Ω	PT IN 00 H
R203(1)	PAG1	B7	68Ω	PT IN 01 H
R205(1)	PAG1	B6	68Ω	PT IN 02 H

RESISTOR LOC(PIN)	SHOWN ON DRW#	REF	VALUE	TERMINATES SIGNAL
R202(1)	PAG1	B6	68Ω	PT IN 03 H
R201(1)	PAG1	B5	68Ω	PT IN 04 H
R200(1)	PAG1	B4	68Ω	PT IN 05 H
R199(1)	PAG1	B4	68Ω	PT IN 06 H
R198(1)	PAG1	B3	68Ω	PT IN 07 H
R194(1)	PAG1	B2	68Ω	PT IN 08 H
R181(1)	PAG2	B7	68Ω	PT IN 09 H
R180(1)	PAG2	B7	68Ω	PT IN 10 H
R179(1)	PAG2	B6	68Ω	PT IN 11 H
R178(1)	PAG2	B5	68Ω	PT IN 12 H
R177(1)	PAG2	B5	68Ω	PT IN 13 H
R175(1)	PAG2	B4	68Ω	PT IN 14 H
R176(1)	PAG2	B3	68Ω	PT IN 15 H
R173(1)	PAG2	B3	68Ω	PT IN 16 H
R168(1)	PAG2	B2	68Ω	PT IN 17 H
R245(1)	PAG1	A7	68Ω	PT IN 18 H
R243(1)	PAG1	A6	68Ω	PT IN 19 H
R242(1)	PAG1	A6	68Ω	PT IN 20 H
R241(1)	PAG1	A5	68Ω	PT IN 21 H
R240(1)	PAG1	A5	68Ω	PT IN 22 H
R239(1)	PAG1	A4	68Ω	PT IN 23 H
R237(1)	PAG1	A3	68Ω	PT IN 24 H
R238(1)	PAG1	A3	68Ω	PT IN 25 H
R231(1)	PAG1	A2	68Ω	PT IN 26 H
R225(1)	PAG2	A7	68Ω	PT IN 27 H
R223(1)	PAG2	A6	68Ω	PT IN 28 H
R224(1)	PAG2	A6	68Ω	PT IN 29 H
R221(1)	PAG2	A5	68Ω	PT IN 30 H
R222(1)	PAG2	A4	68Ω	PT IN 31 H
R219(1)	PAG2	A4	68Ω	PT IN 32 H
R220(1)	PAG2	A3	68Ω	PT IN 33 H
R218(1)	PAG2	A3	68Ω	PT IN 34 H
R212(1)	PAG2	A2	68Ω	PT IN 35 H
R70(1)	PAG5	A4	68Ω	SH AR PAR ODD A H
R9(1)	PAG3	C6	68Ω	VMA2 VMA 13 A H
R8(1)	PAG3	C5	68Ω	VMA2 VMA 14 A H
R7(1)	PAG3	C5	68Ω	VMA2 VMA 15 A H
R6(1)	PAG3	C4	68Ω	VMA2 VMA 16 A H
R15(1)	PAG3	B7	68Ω	VMA2 VMA 17 H
R51(1)	PAG3	C3	68Ω	VMA2 VMA 17 A H

RESISTOR LOC(PIN)	SHOWN ON DRW#	REF	VALUE	TERMINATES SIGNAL
R47(1)	PAG3	D8	68Ω	VMA2 VMA 18 H
R19(1)	PAG3	B7	68Ω	VMA2 VMA 19 H
R14(1)	PAG3	B7	68Ω	VMA2 VMA 20 H
R49(1)	PAG3	D8	68Ω	VMA2 VMA 21 H
R48(1)	PAG3	D8	68Ω	VMA2 VMA 22 H
R50(1)	PAG3	C8	68Ω	VMA2 VMA 23 H
R76(1)	PAG3	A5	68Ω	VMA2 VMA 24 H
R91(1)	PAG3	A7	68Ω	VMA2 VMA 25 H
R18(1)	PAG3	B5	68Ω	VMA2 VMA 26 H

NOTE:

1. ALL TERMINATORS HAVE PIN TWO CONNECTED TO -2.0V AND ARE 5% 1/4WATT UNLESS OTHERWISE SPECIFIED
2. ENTRIES ARE SORTED BY SIGNAL NAME
3. % INDICATES OUTPUT OF DIP LOC AND
   () INDICATES PIN NUMBER

"THIS DRAWING AND SPECIFICATIONS, HEREIN, ARE THE PROPERTY OF DIGITAL EQUIPMENT CORPORATION AND SHALL NOT BE REPRODUCED OR COPIED OR USED IN WHOLE OR IN PART AS THE BASIS FOR THE MANUFACTURE OR SALE OF ITEMS WITHOUT WRITTEN PERMISSION.
COPYRIGHT © 1977, DIGITAL EQUIPMENT CORPORATION"

REVISIONS		
CHK	CHANGE NO.	REV

digital

F8282.DRW(4.551) 04-JAN-77 13:46

DRN DATE 04-JAN-77
CHK DATE
ENG. DATE 11-JAN-79
BOARD LOCATION:
SHEET 2 OF 2
NEXT HIGHER ASSEMBLY: B-DD-M8520-YA
FIRST USED ON OPTION/MODEL: KL10-PV

TITLE: PAGING TERMINATORS

SIZE	CODE	NUMBER	REV.
D	CS	M8520-YA-RES	

MR

113

REVISION CONTROL SHEET

CUSTOMER PRINT SET	MFG SET	DRAWING NO	NO OF SHT	DESCRIPTION	OPTION NO/FILE DATE	REVISIONS
			-	MODULE REVISION		A
		D-UA-M8521-Ø-Ø	4	CACHE DATA		-
		D-CS-M8521-Ø-CHD1	1	CACHE DATA		-
		D-CS-M8521-Ø-CHD2	1	CACHE DATA		-
		D-CS-M8521-Ø-CHD3	1	CACHE DATA		-
		D-CS-M8521-Ø-CHD4	1	CACHE DATA		-
		D-CS-M8521-Ø-CHD5	1	CACHE DATA		-
		D-CS-M8521-Ø-CHD6	1	CACHE DATA		-
		D-CS-M8521-Ø-RES	1	CACHE DATA		-
		K-CO-M8521-Ø-4	1	CACHE DATA (CALDEC DATA BASE)		B
		D-AH-M8521-Ø-5	4	CACHE DATA		A
		B-MH M8521-Ø-6	1	MODULE ECO-HISTORY		-
		5010642	-	ETCH CIRCUIT BOARD		B
		P00-M8521-00	-	PROCESS SHEET (REF ONLY)		

CUSTOMER PRINT SET CODES	
	X = PRINT OF DOCUMENT INCLUDED IN PRINT SET C = INCLUDES ALL PRINTS INDICATED ON DOCUMENT S = CONFIDENTIAL AUTHORIZED SIGNATURE REQUIRED

ECO NO	
ORIG	

TITLE		SIZE	CODE	NUMBER	REV
CACHE DATA	SHEET 2 OF 2	B	DD	M8521-Ø	

MR

"THIS DRAWING AND SPECIFICATIONS, HEREIN, ARE THE PROPERTY OF DIGITAL EQUIPMENT CORPORATION AND SHALL NOT BE REPRODUCED OR COPIED OR USED IN WHOLE OR IN PART AS THE BASIS FOR THE MANUFACTURE OR SALE OF ITEMS WITHOUT WRITTEN PERMISSION. COPYRIGHT ©1974 DIGITAL EQUIPMENT CORPORATION"

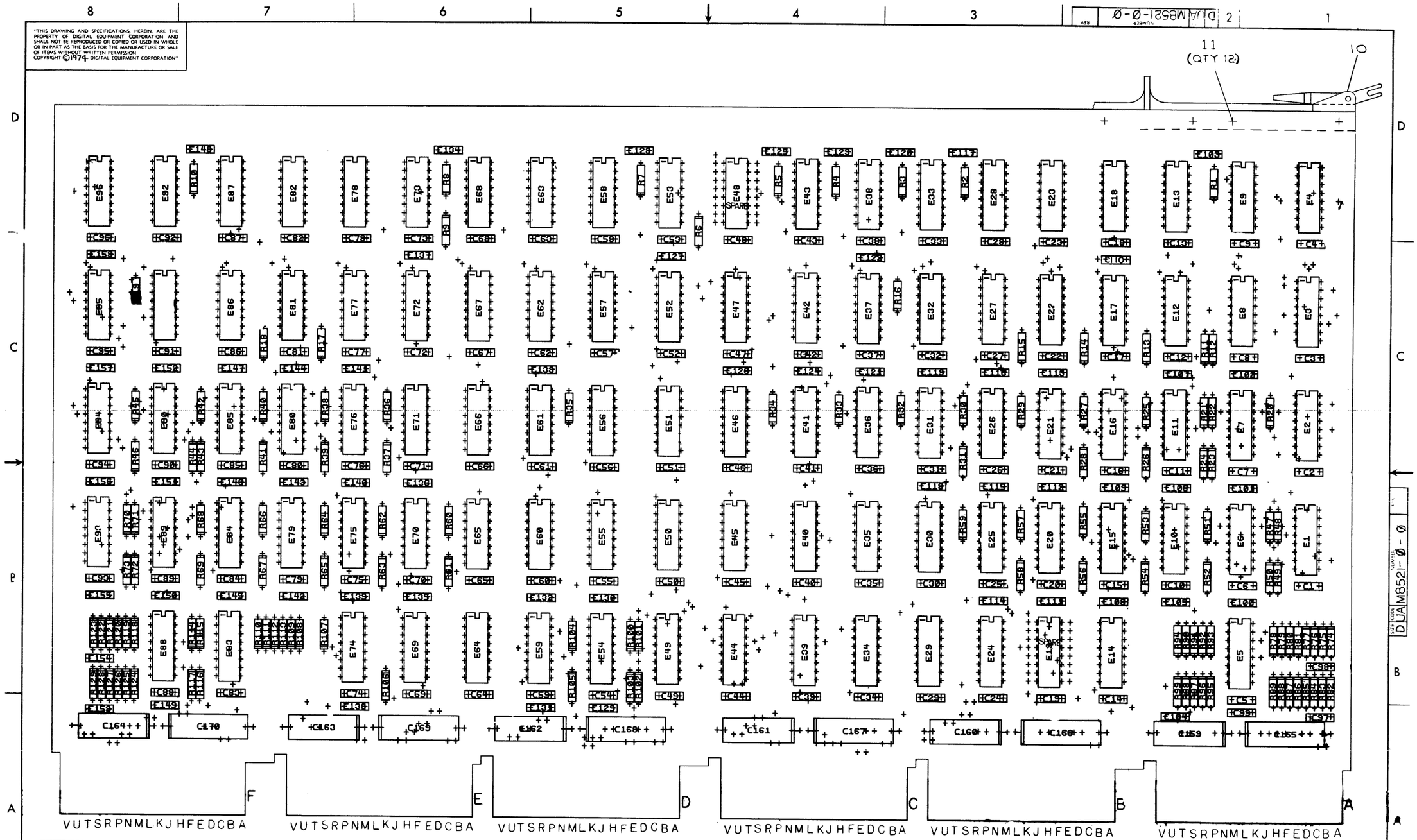

REVISIONS		
CHK	CHANGE NO.	REV.

TITLE	SIZE	CODE	NUMBER	REV.
CACHE DATA	D	UA	M8521-Ø-Ø	
SCALE 2/1	SHEET 2 OF 4	DIST.		

MR

115

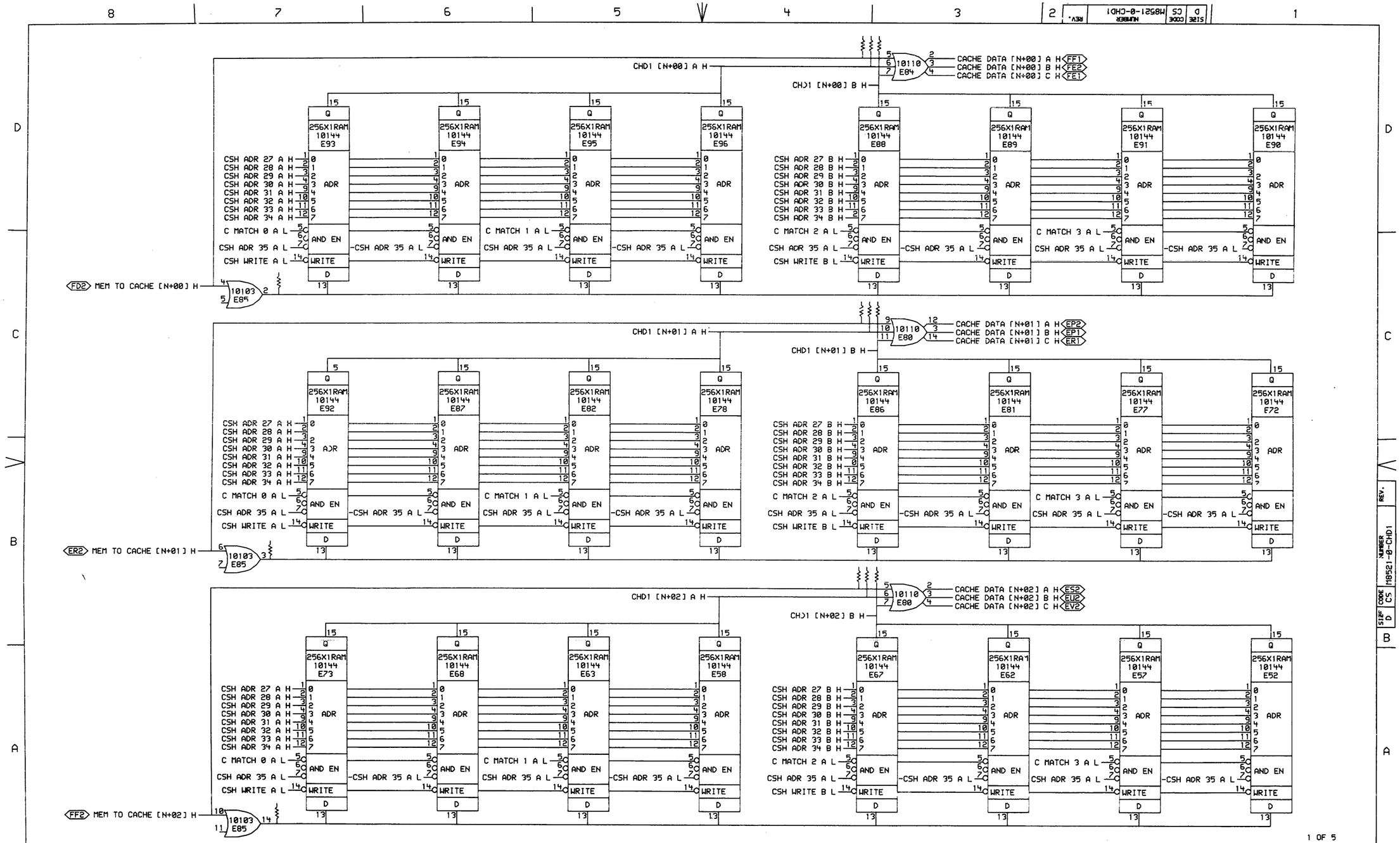

"THIS DRAWING AND SPECIFICATIONS, HEREIN, ARE THE PROPERTY OF DIGITAL EQUIPMENT CORPORATION AND SHALL NOT BE REPRODUCED OR COPIED OR USED IN WHOLE OR IN PART AS THE BASIS FOR THE MANUFACTURE OR SALE OF ITEMS WITHOUT WRITTEN PERMISSION. COPYRIGHT © 1974, DIGITAL EQUIPMENT CORPORATION"

REVISIONS		
CHK	CHANGE NO.	REV

digital

DRN. DATE 11/12/74 ENG. DATE 11/12/74
CHK'D DATE 11/12/74 BOARD LOCATION:
SHEET 1 OF 1

CHD1EXC4,121] 29-OCT-74 23:49 NEXT HIGHER ASSEMBLY:
FIRST USED ON OPTION/MODEL: KL10 B-DD-M8521-0

TITLE: CACHE DATA BITS [N]-[N+02]

SIZE	CODE	NUMBER	REV.
D	CS	M8521-0-CHD1	

MR 1

110

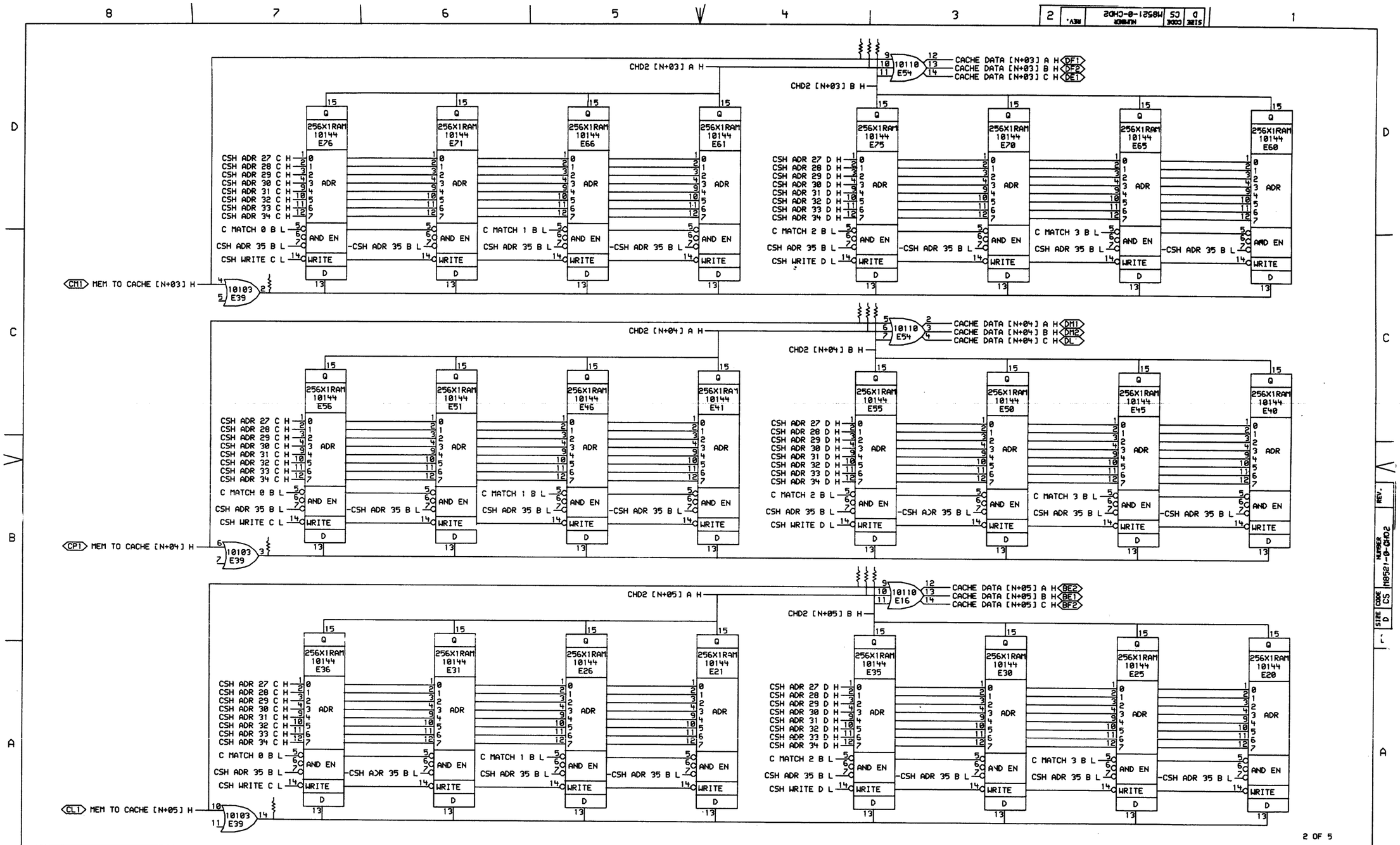

"THIS DRAWING AND SPECIFICATIONS, HEREIN, ARE THE PROPERTY OF DIGITAL EQUIPMENT CORPORATION AND SHALL NOT BE REPRODUCED OR COPIED OR USED IN WHOLE OR IN PART AS THE BASIS FOR THE MANUFACTURE OR SALE OF ITEMS WITHOUT WRITTEN PERMISSION.
COPYRIGHT © 1974, DIGITAL EQUIPMENT CORPORATION"

REVISIONS		
CHK	CHANGE NO.	REV

digital

DRN. W.H. Stephenson | DATE 11/12/74 | ENG. V.M. Sue | DATE 11/12/74
CHK'D. W.H. Stephenson | DATE 11/12/74 | BOARD LOCATION: | SHEET 1 OF 1
CH2EX[4,121] 29-OCT-74 23:49 | NEXT HIGHER ASSEMBLY:
FIRST USED ON OPTION/MODEL: KL10 | B-DD-M8521-0

TITLE: CACHE DATA BITS [N+03]-[N+05]

SIZE	CODE	NUMBER	REV.
D	CS	M8521-0-CHD2	

MR

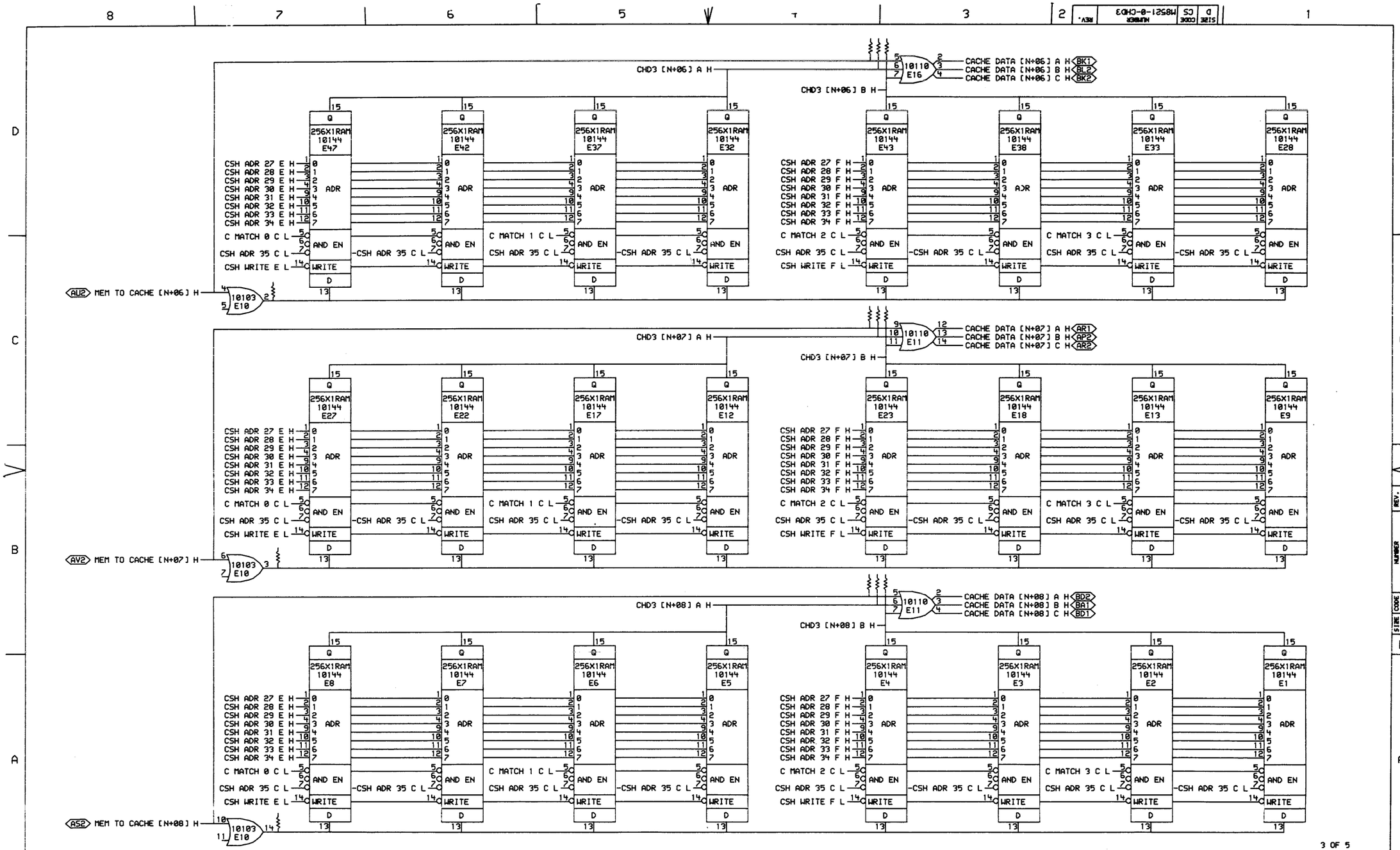

"THIS DRAWING AND SPECIFICATIONS, HEREIN, ARE THE PROPERTY OF DIGITAL EQUIPMENT CORPORATION AND SHALL NOT BE REPRODUCED OR COPIED OR USED IN WHOLE OR IN PART AS THE BASIS FOR THE MANUFACTURE OR SALE OF ITEMS WITHOUT WRITTEN PERMISSION.
COPYRIGHT © 1974, DIGITAL EQUIPMENT CORPORATION"

REVISIONS		
CHK	CHANGE NO.	REV

digital

DRN W.A. Steinman DATE 11/12/74 ENG. DATE 11/12/74
CHK'D W.A. Steinman DATE 11/12/74 BOARD LOCATION: SHEET 1 OF 1
CHD3EXC(4,121) 29-OCT-74 23:49 NEXT HIGHER ASSEMBLY: B-DD-M8521-0
FIRST USED ON OPTION/MODEL: KL10

TITLE: CACHE DATA BITS [N+06]-[N+08]

SIZE	CODE	NUMBER	REV.
D	CS	M8521-0-CHD3	

MR

118

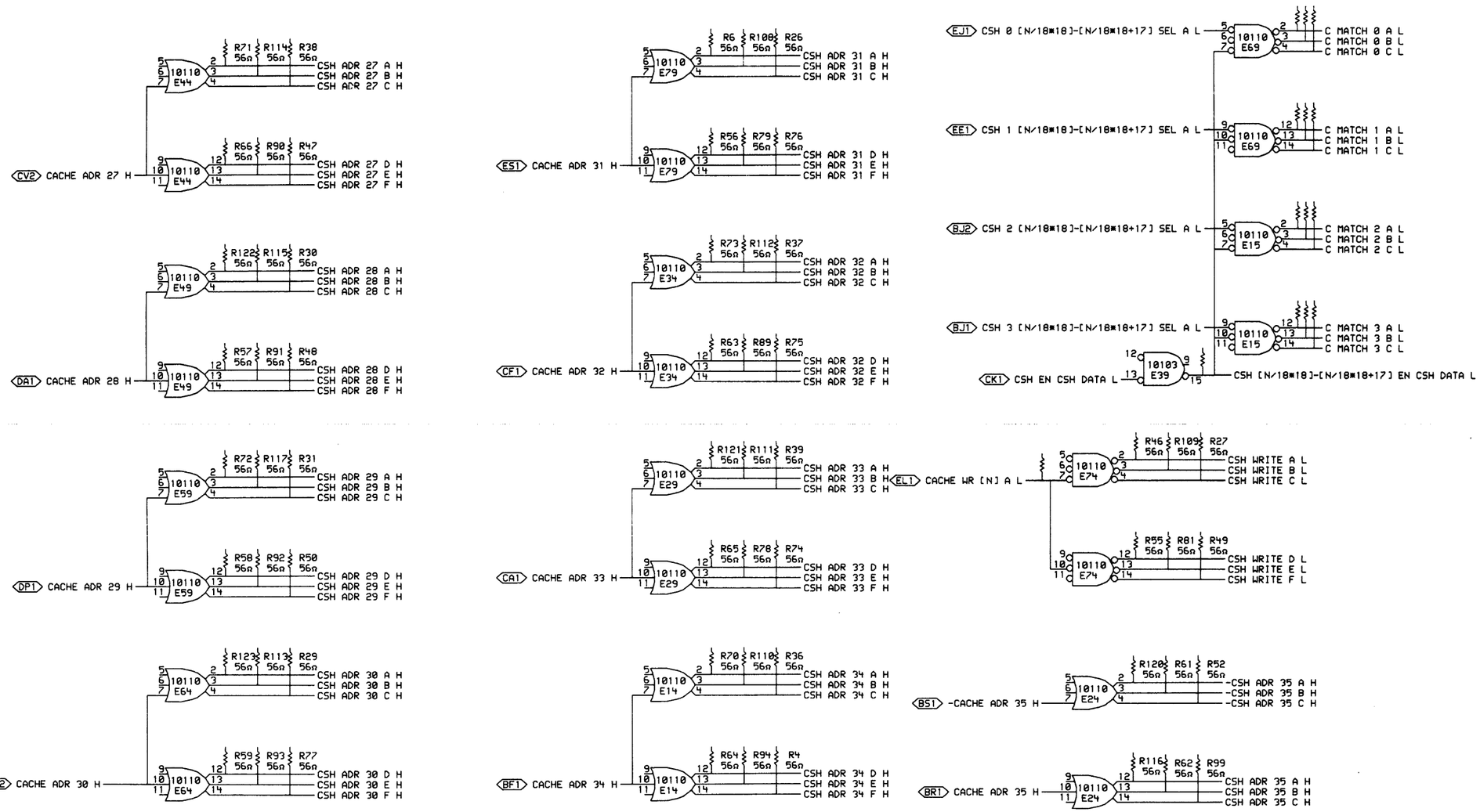

4 OF 5

"THIS DRAWING AND SPECIFICATIONS, HEREIN, ARE THE PROPERTY OF DIGITAL EQUIPMENT CORPORATION AND SHALL NOT BE REPRODUCED OR COPIED OR USED IN WHOLE OR IN PART AS THE BASIS FOR THE MANUFACTURE OR SALE OF ITEMS WITHOUT WRITTEN PERMISSION.
COPYRIGHT © 1974, DIGITAL EQUIPMENT CORPORATION"

REVISIONS		
CHK	CHANGE NO.	REV

digital

DRN. | DATE | ENG. | DATE
CHK | DATE | BOARD LOCATION:
CHD4EX[4,121] 04-NOV-74 13:45 | SHEET 1 OF 1 | NEXT HIGHER ASSEMBLY:
FIRST USED ON OPTION/MODEL: KL10 | B-DD-M8521-0

TITLE: CACHE DATA ADDRESSING LOGIC

SIZE	CODE	NUMBER	REV.
D	CS	M8521-0-CHD4	

119

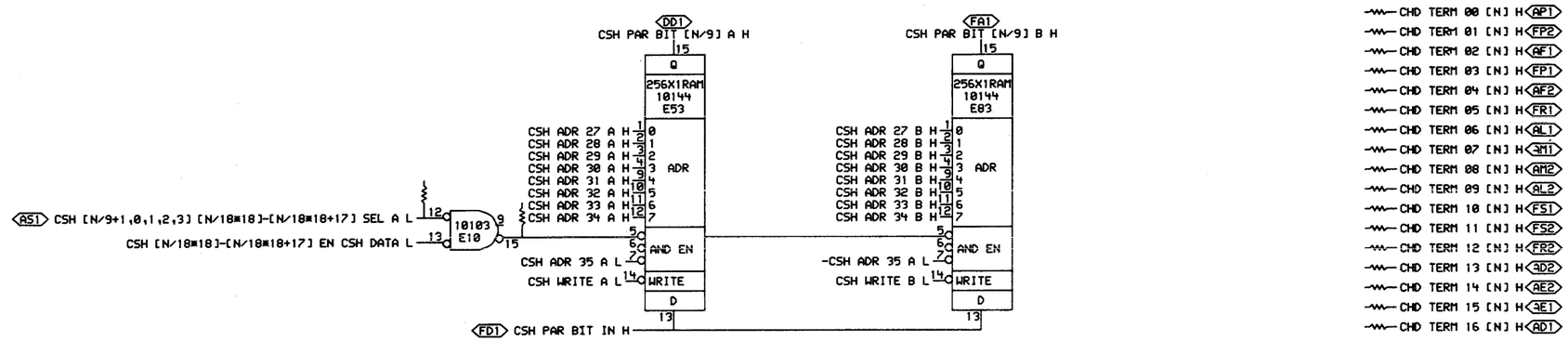

CHD TERM 00 [N] H AP1
CHD TERM 01 [N] H FP2
CHD TERM 02 [N] H AF1
CHD TERM 03 [N] H FP1
CHD TERM 04 [N] H AF2
CHD TERM 05 [N] H FR1
CHD TERM 06 [N] H AL1
CHD TERM 07 [N] H AM1
CHD TERM 08 [N] H AM2
CHD TERM 09 [N] H AL2
CHD TERM 10 [N] H FS1
CHD TERM 11 [N] H FS2
CHD TERM 12 [N] H FR2
CHD TERM 13 [N] H AD2
CHD TERM 14 [N] H AE2
CHD TERM 15 [N] H AE1
CHD TERM 16 [N] H AD1

NOTE:
1. CHD TERM 00 [N] H THRU CHD TERM 16 [N] H ARE TERMINATORS WHICH ARE USED TO TERMINATE BACKPANEL SIGNALS

5 OF 5

"THIS DRAWING AND SPECIFICATIONS, HEREIN, ARE THE PROPERTY OF DIGITAL EQUIPMENT CORPORATION AND SHALL NOT BE REPRODUCED OR COPIED OR USED IN WHOLE OR IN PART AS THE BASIS FOR THE MANUFACTURE OR SALE OF ITEMS WITHOUT WRITTEN PERMISSION.
COPYRIGHT © 1974, DIGITAL EQUIPMENT CORPORATION"

REVISIONS		
CHK	CHANGE NO.	REV

digital

DRN: DATE 11/12/74 ENG. DATE 11/12/74
CHK'D: DATE 11/12/74 BOARD LOCATION:
SHEET 1 OF 1
CHD5EXE[4,121] 30-OCT-74 11:14 NEXT HIGHER ASSEMBLY:
FIRST USED ON OPTION/MODEL: KL10 B-DD-M8521-0

TITLE: CACHE DATA PARITY BITS

SIZE	CODE	NUMBER	REV.
D	CS	M8521-0-CHD5	

SIZE D CODE CS NUMBER M8521-0-CHD5 REV.

MF 1

120

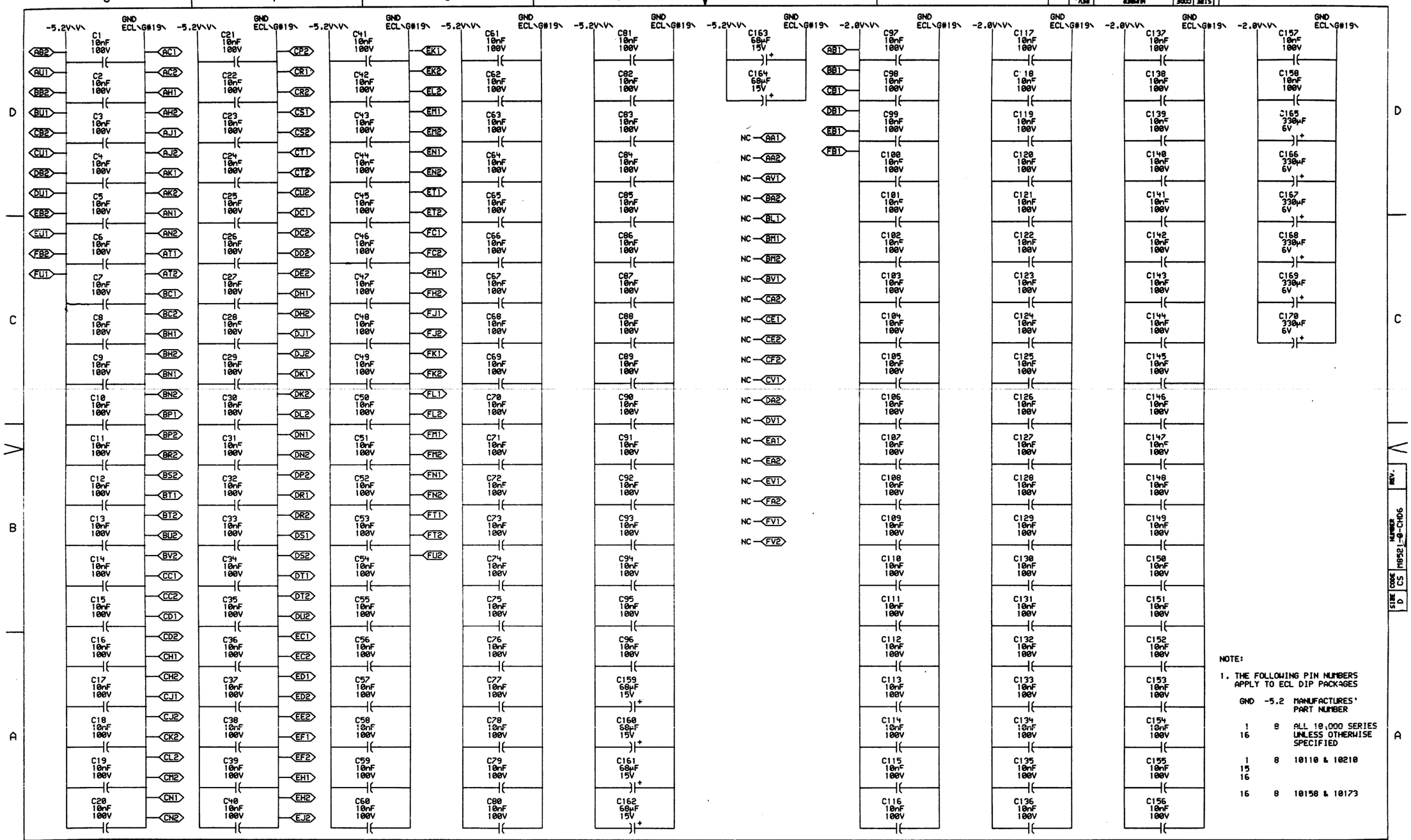

NOTE:

1. THE FOLLOWING PIN NUMBERS APPLY TO ECL DIP PACKAGES

GND	-5.2	MANUFACTURES' PART NUMBER
1 16	8	ALL 10,000 SERIES UNLESS OTHERWISE SPECIFIED
1 15 16	8	10110 & 10210
16	8	10158 & 10173

"THIS DRAWING AND SPECIFICATIONS, HEREIN, ARE THE PROPERTY OF DIGITAL EQUIPMENT CORPORATION AND SHALL NOT BE REPRODUCED OR COPIED OR USED IN WHOLE OR IN PART AS THE BASIS FOR THE MANUFACTURE OR SALE OF ITEMS WITHOUT WRITTEN PERMISSION.
COPYRIGHT © 1974, DIGITAL EQUIPMENT CORPORATION"

REVISIONS		
CHK	CHANGE NO.	REV

digital

DRN. DATE ENG. DATE
CHK'D. DATE BOARD LOCATION:
SHEET 1 OF 1

CHD6EXC(4,121) 31-OCT-74 08:40

FIRST USED ON OPTION/MODEL: KL10

NEXT HIGHER ASSEMBLY: B-DD-M8521-0

TITLE: CACHE DATA POWER, GND, CAP

SIZE	CODE	NUMBER	REV.
D	CS	M8521-0-CHD6	

121

RESISTOR LOC	PIN	SHOWN ON DRW NO	TERMINATES SIGINAL
R 80	1	CHD3	%E10(14)
R 7	1	CHD5	%E10(15)
R 2	1	CHD3	%E10(2)
R 1	1	CHD3	%E10(3)
R 33	1	CHD2	%E39(14)
R 35	1	CHD2	%E39(2)
R 34	1	CHD2	%E39(3)
R 9	1	CHD1	%E85(14)
R 118	1	CHD1	%E85(2)
R 10	1	CHD1	%E85(3)
R 8	1	CHD4	-C MATCH 0 A H
R 32	1	CHD4	-C MATCH 0 B H
R 20	1	CHD4	-C MATCH 0 C H
R 19	1	CHD4	-C MATCH 1 A H
R 28	1	CHD4	-C MATCH 1 B H
R 16	1	CHD4	-C MATCH 1 C H
R 119	1	CHD4	-C MATCH 2 A H
R 67	1	CHD4	-C MATCH 2 B H
R 5	1	CHD4	-C MATCH 2 C H
R 45	1	CHD4	-C MATCH 3 A H
R 60	1	CHD4	-C MATCH 3 B H
R 3	1	CHD4	-C MATCH 3 C H

RESISTOR LOC	PIN	SHOWN ON DRW NO	TERMINATES SIGINAL
R 107	1	CHD4	-CACHE WR [N] A H
R 98	1	CHD5	CHD TERM 00 [N] H
R 127	1	CHD5	CHD TERM 01 [N] H
R 86	1	CHD5	CHD TERM 02 [N] H
R 124	1	CHD5	CHD TERM 03 [N] H
R 87	1	CHD5	CHD TERM 04 [N] H
R 125	1	CHD5	CHD TERM 05 [N] H
R 88	1	CHD5	CHD TERM 06 [N] H
R 97	1	CHD5	CHD TERM 07 [N] H
R 96	1	CHD5	CHD TERM 08 [N] H
R 95	1	CHD5	CHD TERM 09 [N] H
R 126	1	CHD5	CHD TERM 10 [N] H
R 129	1	CHD5	CHD TERM 11 [N] H
R 128	1	CHD5	CHD TERM 12 [N] H
R 83	1	CHD5	CHD TERM 13 [N] H
R 85	1	CHD5	CHD TERM 14 [N] H
R 84	1	CHD5	CHD TERM 15 [N] H
R 82	1	CHD5	CHD TERM 16 [N] H
R 68	1	CHD1	CHD1 [N+00] A H
R 69	1	CHD1	CHD1 [N+00] B H
R 17	1	CHD1	CHD1 [N+01] A H
R 40	1	CHD1	CHD1 [N+01] B H

RESISTOR LOC	PIN	SHOWN ON DRW NO	TERMINATES SIGINAL
R 18	1	CHD1	CHD1 [N+02] A H
R 41	1	CHD1	CHD1 [N+02] B H
R 103	1	CHD2	CHD2 [N+03] A H
R 102	1	CHD2	CHD2 [N+03] B H
R 104	1	CHD2	CHD2 [N+04] A H
R 105	1	CHD2	CHD2 [N+04] B H
R 54	1	CHD2	CHD2 [N+05] A H
R 53	1	CHD2	CHD2 [N+05] B H
R 15	1	CHD3	CHD3 [N+06] A H
R 14	1	CHD3	CHD3 [N+06] B H
R 12	1	CHD3	CHD3 [N+07] A H
R 11	1	CHD3	CHD3 [N+07] B H
R 22	1	CHD3	CHD3 [N+08] A H
R 106	1	CHD4	-CSH [N/18*18]-[N/18*18+17] EN CSH DATA H
R 51	1	CHD5	-CSH [N/9+1,0,1,2,3] [N/18*18]-[N/18*18+17] SEL A
R 42	1	CHD1	MEM TO CACHE [N+00] H
R 43	1	CHD1	MEM TO CACHE [N+01] H
R 44	1	CHD1	MEM TO CACHE [N+02] H
R 100	1	CHD2	MEM TO CACHE [N+03] H
R 101	1	CHD2	MEM TO CACHE [N+04] H
R 23	1	CHD2	MEM TO CACHE [N+05] H
R 25	1	CHD3	MEM TO CACHE [N+06] H
R 24	1	CHD3	MEM TO CACHE [N+07] H
R 21	1	CHD3	MEM TO CACHE [N+08] H

NOTE:

1. ENTRIES ARE SORTED BY SIGNAL NAME
2. ALL TERMINATION RESISTORS ARE 68Ω 1/4W 5% AND
   ARE CONNECTED TO -2.0V UNLESS OTHERWISE SPECIFIED
3. % INDICATES OUTPUT OF DIP LOC AND
   ( ) INDICATES PIN NUMBER

"THIS DRAWING AND SPECIFICATIONS, HEREIN, ARE THE PROPERTY OF DIGITAL EQUIPMENT CORPORATION AND SHALL NOT BE REPRODUCED OR COPIED OR USED IN WHOLE OR IN PART AS THE BASIS FOR THE MANUFACTURE OR SALE OF ITEMS WITHOUT WRITTEN PERMISSION.
COPYRIGHT © 1974, DIGITAL EQUIPMENT CORPORATION"

REVISIONS		
CHK	CHANGE NO.	REV

DRN. C Smith DATE 31-OCT-74 ENG. DATE 11/12/74
CHK'D DATE BOARD LOCATION:
M8521[4,427] 06-NOV-74 07:19 SHEET 1 OF 1
FIRST USED ON OPTION/MODEL: KL10 NEXT HIGHER ASSEMBLY: B-DD-M8521-0

TITLE: CHACHE DATA TERMINATORS

SIZE	CODE	NUMBER	REV.
D	CS	M8521-0-RES	

MR 1

122

DRAWING NUMBER	PAGE	PART NO.	DESCRIPTION		REVISIONS	
			FILE: ORIGINAL LAYOUT			
			ECO NUMBER		1	2
			MODULE REVISION	A	B	B
D-UA-M8549-YH-0	5		CACHE DATA SUBSTITUTE BOARD	-	A	B
K-PL-M8549-YH-DBP	1		PARTS LIST	-	A	B
D-CS-M8549-YH-CS0	1		CACHE DATA SUBSTITUTE BOARD	-	A	A
D-MD-5011495-0-0	5		DRILL & ETCH DRAWING	-	-	A
		5011495	ETCH CIRCUIT BOARD	A	A	A
K-PC-M8549-YH-DBC	-		P.C. DESIGN DATA BASE	A	A	B
P00-M8549-YH	-		PROCESS SHEET (REFERENCE ONLY)			

NOTES:ECO 2 DOCUMENTATION CHANGE ONLY

"THIS DRAWING AND SPECIFICATIONS, HEREIN, ARE THE PROPERTY OF DIGITAL EQUIPMENT CORPORATION AND SHALL NOT BE REPRODUCED OR COPIED OR USED IN WHOLE OR IN PART AS THE BASIS FOR THE MANUFACTURE OR SALE OF ITEMS WITHOUT WRITTEN PERMISSION. COPYRIGHT © 1978, DIGITAL EQUIPMENT CORPORATION"

REVISIONS		
CHK	CHANGE NO.	REV
	M8549-YH-2	B

T. BOWEN

DSK:8549HD.T2P[4,550] 21-NOV-78 08:40
FIRST USED ON OPTION/MODEL: KL10/20

DRN: D. Toomey DATE 21-NOV-78
CHK'D: M. Howard DATE 21 Nov 78
ENG. Tom Bowen DATE 22 Nov 78
BOARD LOCATION:
SHEET 1 OF 1
NEXT HIGHER ASSEMBLY: NONE

TITLE: CACHE DATA SUBSTITUTE BOARD

SIZE	CODE	NUMBER	REV.
D	DD	M8549-YH	B

mr

123

"THIS DRAWING AND SPECIFICATIONS, HEREIN, ARE THE PROPERTY OF DIGITAL EQUIPMENT CORPORATION AND SHALL NOT BE REPRODUCED OR COPIED OR USED IN WHOLE OR IN PART AS THE BASIS FOR THE MANUFACTURE OR SALE OF ITEMS WITHOUT WRITTEN PERMISSION.
COPYRIGHT © 1975 DIGITAL EQUIPMENT CORPORATION"

LAYER I

MS30061 M8549 5011495A

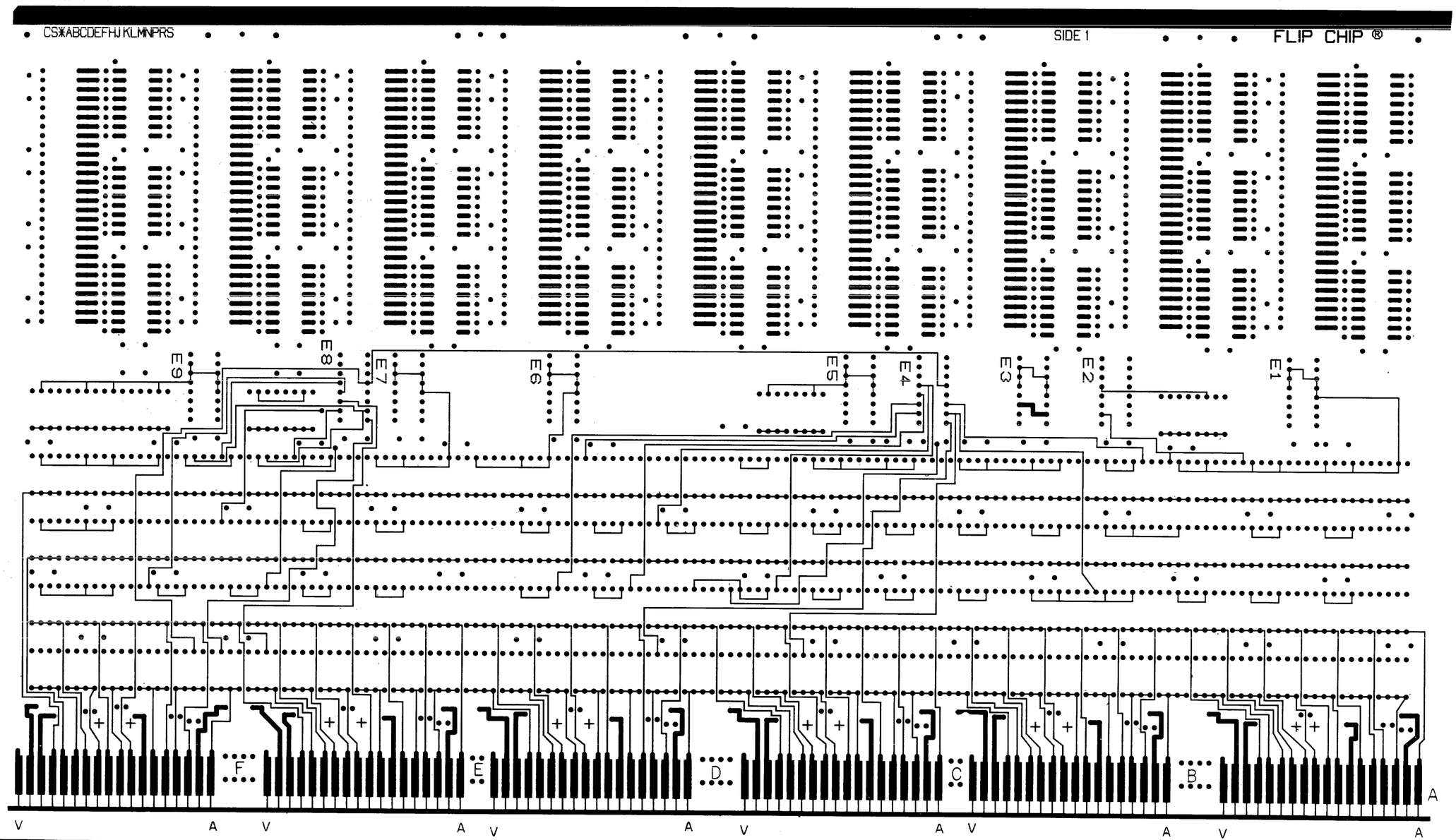

REVISIONS		
CHK	CHANGE NO.	REV.

(LAYER I)

TITLE	SIZE	CODE	NUMBER	REV.
CACHE DATA SUBSTITUTE BOARD	D	UA	M8549 -YH - Ø	B

SCALE — SHEET 2 OF 5 DIST.

MR

12

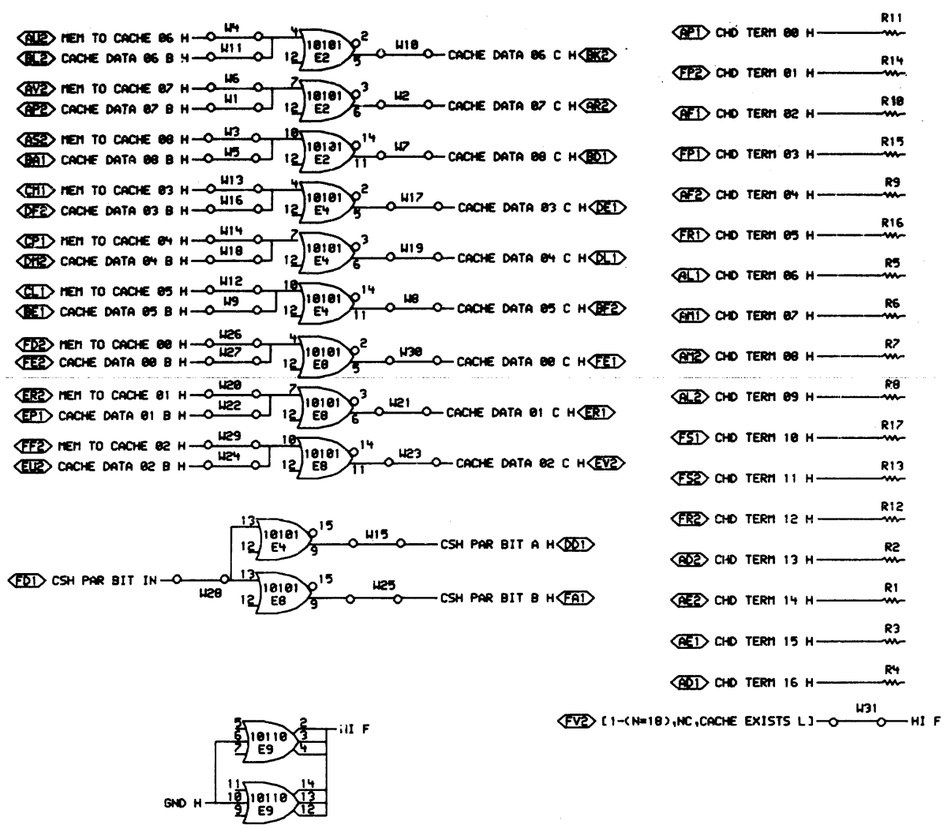

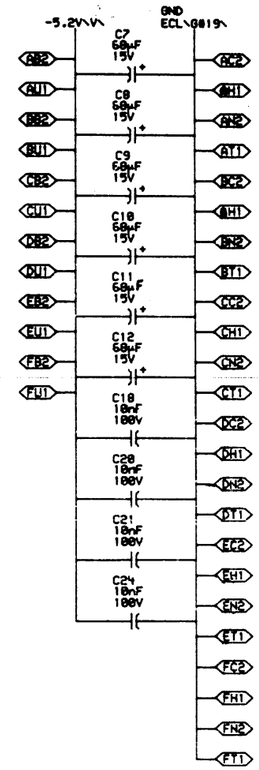

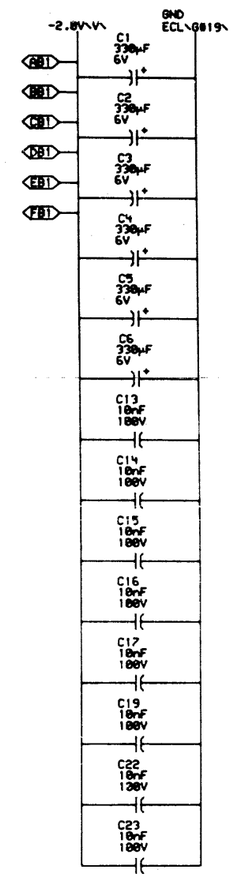

AA2 — NC
AV1 — NC
BA2 — NC
BV1 — NC
CA2 — NC
CV1 — NC
DA2 — NC
DV1 — NC
EA2 — NC
EV1 — NC
FA2 — NC
FV1 — NC

NOTE:

1. THE FOLLOWING PIN NUMBERS APPLY TO ECL DIP PACKAGES

GND	-5.2	MANUFACTURES' PART NUMBER
1 16	8	ALL 10,000 SERIES UNLESS OTHERWISE SPECIFIED
1 15 16	8	10110 & 10210
16	8	10150 & 10173

"THIS DRAWING AND SPECIFICATIONS, HEREIN, A E THE PROPERTY OF DIGITAL EQUIPMENT CORPORATION AND SHALL NOT BE REPRODUCED OR COPIED OR USED IN WHOLE OR IN PART A THE BA IS FOR THE MA UFACTURE OR SALE OF ITEMS WITHOUT WRITTEN PERMISSION. COPYRIGHT © 1979, DIGITAL EQUIPMENT CORPORATION"

REVISIONS		
CHK	CHANGE NO.	REV

J.ALLEN
John Carter 12-16-75
M8549-YA-00001 A

digital

DRN. J. Lockey DATE 08-DEC-79
CHK'D D. Stephenson DATE 12/07/79
ENG. J. Allen DATE 3 Dec '75
BOARD LOCATION: SHEET 1 OF 1
CS01EX.DRW[4,121] 08-DEC-79 12:09 NEXT HIGHER ASSEMBLY:
FIRST USED ON OPTION/MODEL: KL10 B-DD-M8549-0

TITLE: CACHE DATA SUBSTITUTE

SIZE	CODE	NUMBER	REV.
D	CS	M8549-YH-CS01	A

125.

REVISION CONTROL SHEET

CUSTOMER PRINT SET	MFG SET	DRAWING NO	NO OF SHT	DESCRIPTION	OPTION NO/FILE DATE	REVISIONS	
				MODULE REVISION		A	A
		D-UA-M8522-Ø-Ø	5	IR, DRAM & CARRY		-	A
		D-CS-M8522-Ø-IR1	1	IR DRAM & CARRY IR REG & DRAM		-	–
		D-CS-M8522-Ø-IR2	1	IR DRAM & CARRY DRAM		-	–
		D-CS-M8522-Ø-IR3	1	IR DRAM & CARRY DIAG & MISC		-	–
		D-CS-M8522-Ø-IR4	1	IR DRAM & CARRY NETWORK		-	–
		D-CS-M8522-Ø-IR5	1	IR DRAM & CARRY PWR,GND,CAPS		-	–
		D-CS-M8522-Ø-RES	1	IR DRAM & CARRY TERMINATORS		-	–
		K-CO-M8522-Ø-4	1	IR, DRAM & CARRY BOARD		C	C
		D-AH-M8522-Ø-5	4	IR, DRAM & CARRY BOARD		B	B
		B-MH-M8522-Ø-6	1	MODULE ECO HISTORY		-	A
		5010643		ETCH CIRCUIT BOARD		C	C
		P00-M8522-ØØ		PROCESS SHEET (REF ONLY)		-	–

CUSTOMER PRINT SET CODES
X = PRINT OF DOCUMENT INCLUDED IN PRINT SET
C = INCLUDES ALL PRINTS INDICATED ON DOCUMENT
S = CONFIDENTIAL AUTHORIZED SIGNATURE REQUIRED

ECO NO	
ORIG	00001

TITLE		SIZE	CODE	NUMBER	REV
IR, DRAM & CARRY BOARD	SHEET 2 OF 2	B	DD	M8522-Ø	A

MR

126

"THIS DRAWING AND SPECIFICATIONS, HEREIN, ARE THE PROPERTY OF DIGITAL EQUIPMENT CORPORATION AND SHALL NOT BE REPRODUCED OR COPIED OR USED IN WHOLE OR IN PART AS THE BASIS FOR THE MANUFACTURE OR SALE OF ITEMS WITHOUT WRITTEN PERMISSION. COPYRIGHT ©1974 DIGITAL EQUIPMENT CORPORATION"

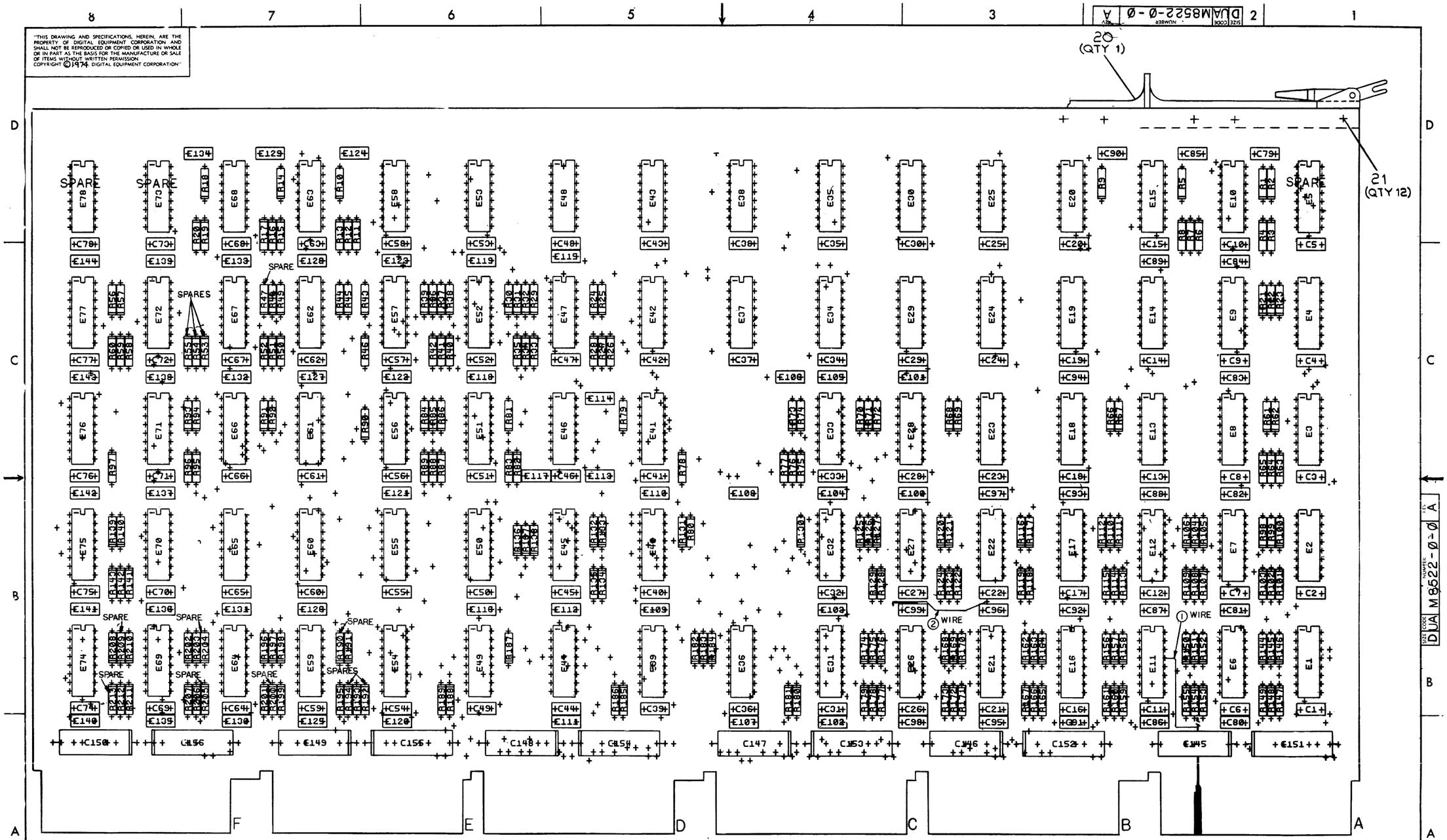

REVISIONS		
CHK	CHANGE NO.	REV.

TITLE	SIZE	CODE	NUMBER	REV.
IR, DRAM & CARRY BOARD	D	UA	M8522-0-0	A
SCALE 2/1	SHEET 2 OF 5	DIST.		

MR

127

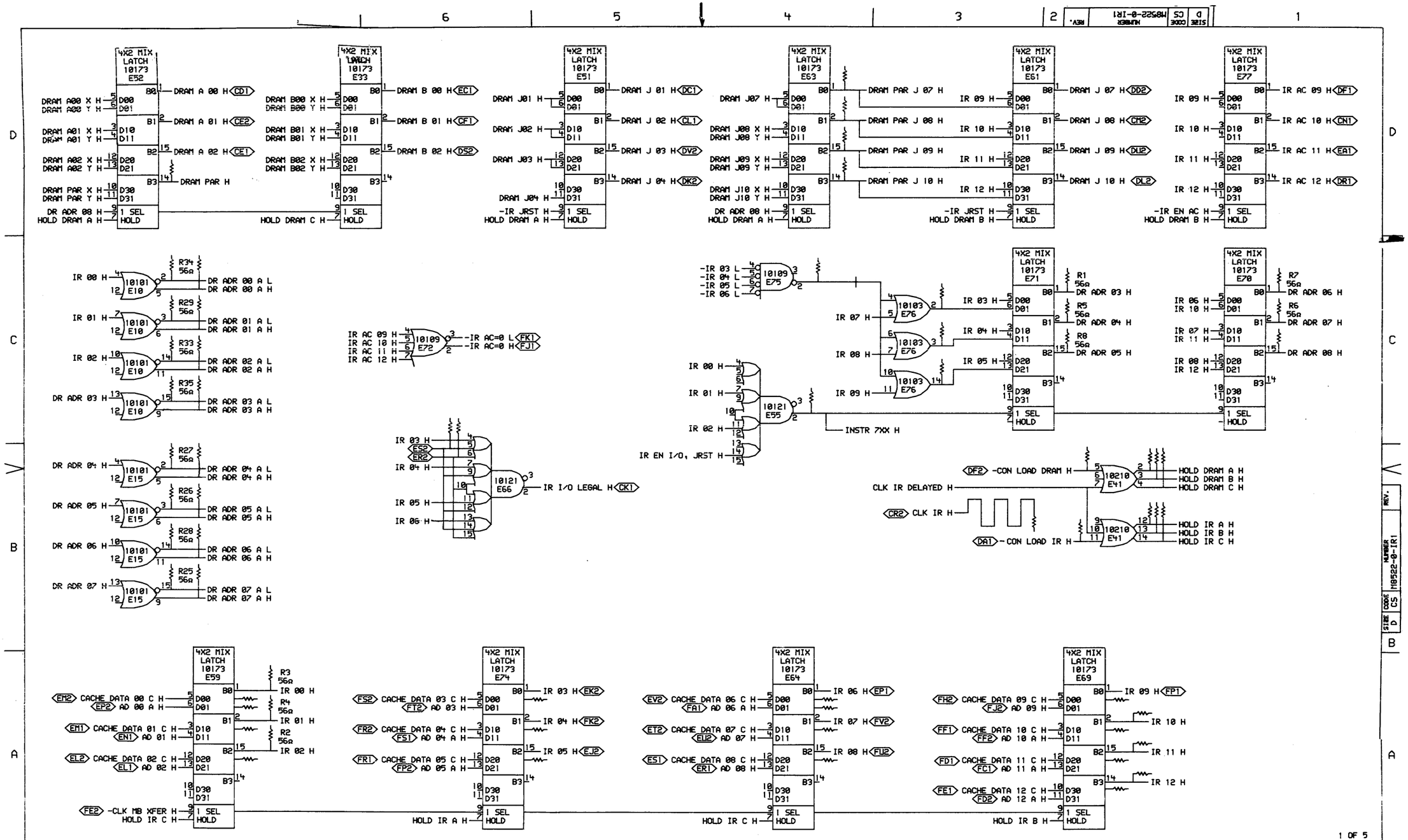

1 OF 5

"THIS DRAWING AND SPECIFICATIONS, HEREIN, ARE THE PROPERTY OF DIGITAL EQUIPMENT CORPORATION AND SHALL NOT BE REPRODUCED OR COPIED OR USED IN WHOLE OR IN PART AS THE BASIS FOR THE MANUFACTURE OR SALE OF ITEMS WITHOUT WRITTEN PERMISSION. COPYRIGHT © 1974, DIGITAL EQUIPMENT CORPORATION"

REVISIONS		
CHK	CHANGE NO.	REV

digital

DRN. R Reid DATE 12-5-74 ENG R Reid DATE 12-5-74
CHK'D R Reid DATE 12-5-74 BOARD LOCATION: SHEET 1 OF 1
IR1EX[4,120] 03-DEC-74 23:48 NEXT HIGHER ASSEMBLY:
FIRST USED ON OPTION/MODEL: KL10 B-DD-M8522-0

TITLE: IR, DRAM & CARRY
IR REG & DRAM

SIZE	CODE	NUMBER	REV.
D	CS	M8522-0-IR1	

1 MR

128

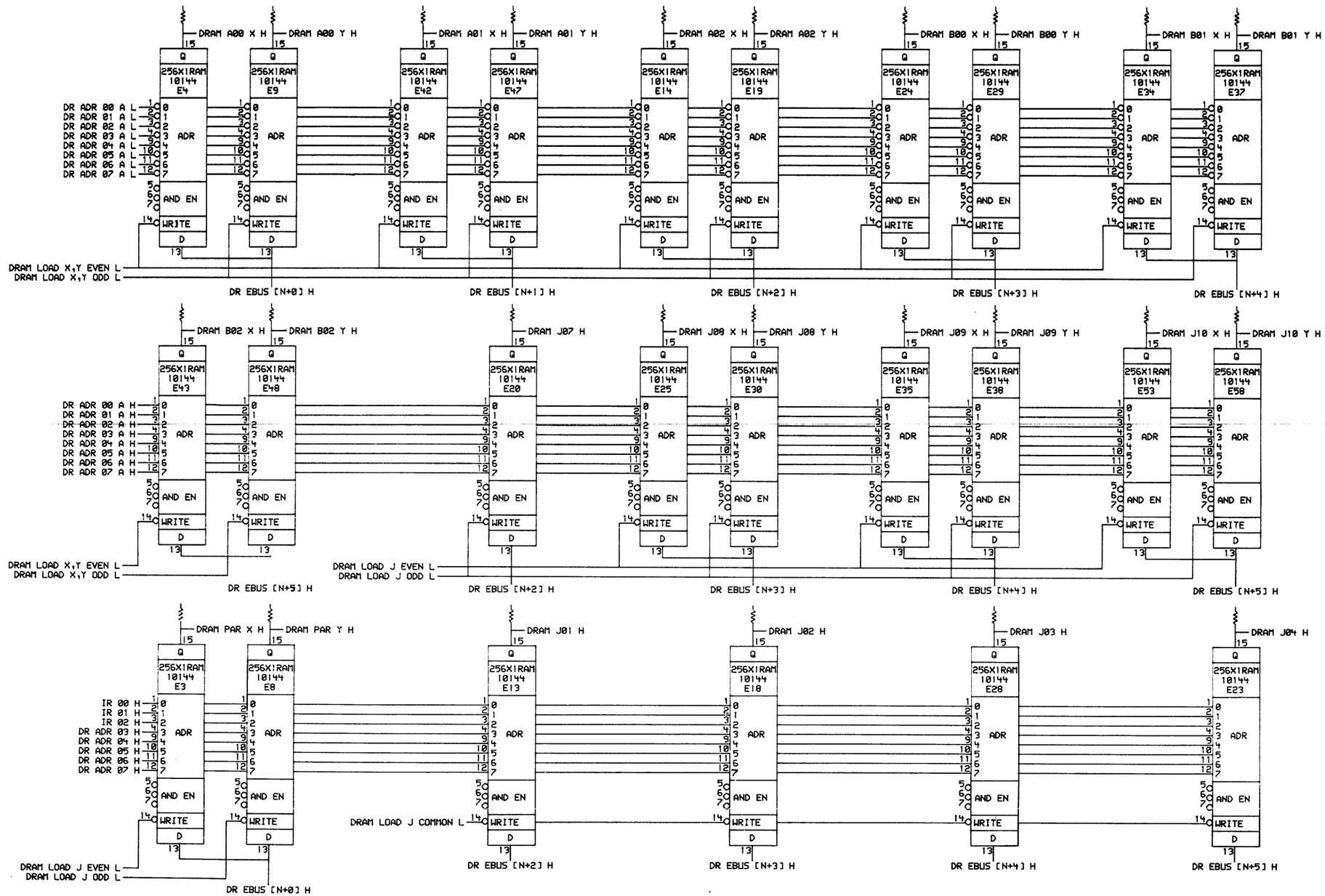

2 OF 5

"THIS DRAWING AND SPECIFICATIONS, HEREIN, ARE THE PROPERTY OF DIGITAL EQUIPMENT CORPORATION AND SHALL NOT BE REPRODUCED OR COPIED OR USED IN WHOLE OR IN PART AS THE BASIS FOR THE MANUFACTURE OR SALE OF ITEMS WITHOUT WRITTEN PERMISSION.
COPYRIGHT © 1974, DIGITAL EQUIPMENT CORPORATION"

REVISIONS		
CHK	CHANGE NO.	REV

digital

DRN. R Reid DATE 12-5-74
CHK'D R Reid DATE 12-5-74
ENG R Reid DATE 12-5-74
BOARD LOCATION: SHEET 1 OF 1
IR2EX[4,120] 02-DEC-74 20:34
NEXT HIGHER ASSEMBLY: B-DD-M8522-0
FIRST USED ON OPTION/MODEL: KL10

TITLE: IR, DRAM & CARRY DRAM

SIZE	CODE	NUMBER	REV.
D	CS	M8522-0-IR2	

CRAM #07	CRAM #08	GATE(S) SELECTED	INSTRUCTIONS USED FOR	CRAM #04	CRAM #05
0	0	X	UNUSED		
0	1	G OR E OR BOTH	CAMX, CAIX (TESTS AD -01, AD FUNC IS A-B)	1	0
1	0	L OR E OR BOTH	SKIPS, JUMPS (TESTS AD 00, AD FUNC IS A, A+1, A-1)	SKIPS=1 JUMPS=0	SKIPS=0 JUMPS=1
1	1	X	TXXX, BLKX (AD FUNC IS AB-1)	1	0

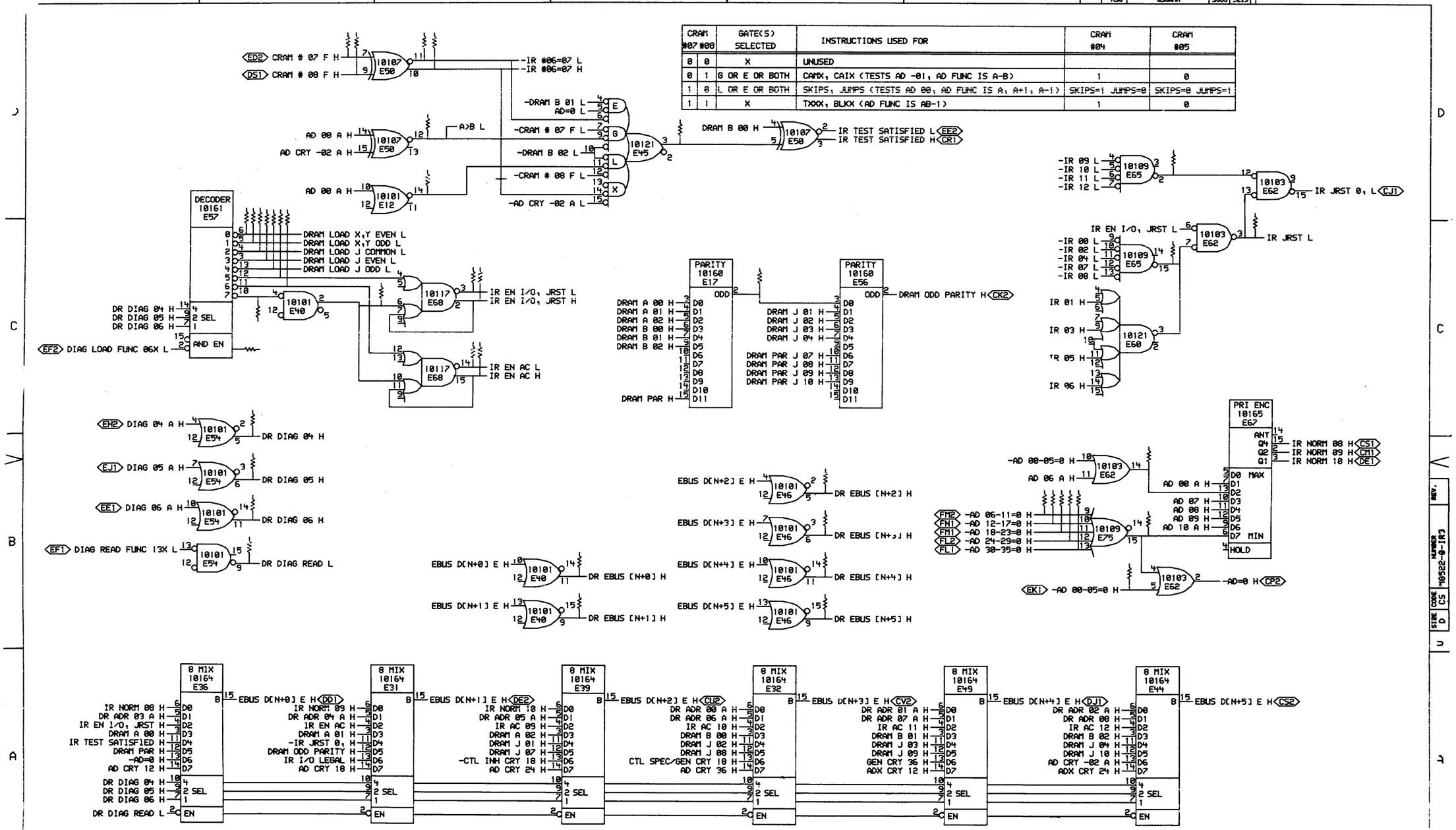

"THIS DRAWING AND SPECIFICATIONS, HEREIN, ARE THE PROPERTY OF DIGITAL EQUIPMENT CORPORATION AND SHALL NOT BE REPRODUCED OR COPIED OR USED IN WHOLE OR IN PART AS THE BASIS FOR THE MANUFACTURE OR SALE OF ITEMS WITHOUT WRITTEN PERMISSION. COPYRIGHT © 1974, DIGITAL EQUIPMENT CORPORATION"

REVISIONS		
CHK	CHANGE NO.	REV

digital

DRN. R Reid DATE 12-5-74 ENG R Reid DATE 12-5-74
CHK'D R Reid DATE 12-5-74 BOARD LOCATION: SHEET 1 OF 1
IR3EXC4,120] 03-DEC-74 23:53 NEXT HIGHER ASSEMBLY:
FIRST USED ON OPTION/MODEL: KL10 B-DD-M8522-0

TITLE: IR, DRAM & CARRY DIAG & MISC.

SIZE	CODE	NUMBER	REV.
D	CS	M8522-0-IR3	

MR

13c

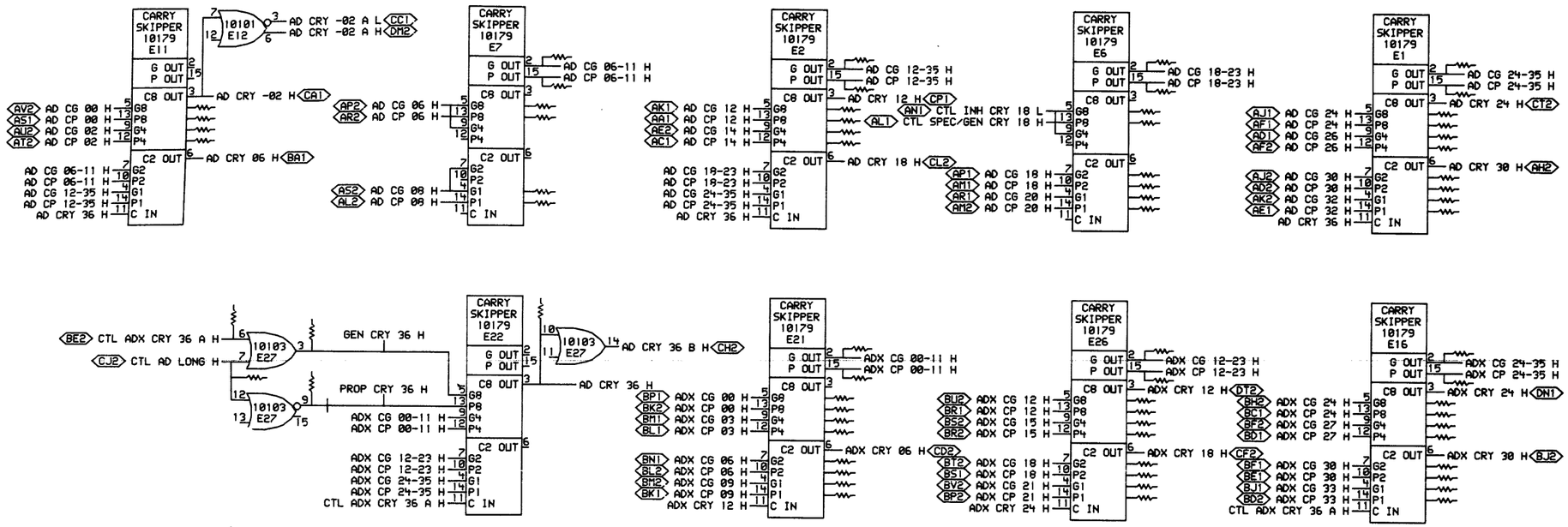

4 OF 5

"THIS DRAWING AND SPECIFICATIONS, HEREIN, ARE THE PROPERTY OF DIGITAL EQUIPMENT CORPORATION AND SHALL NOT BE REPRODUCED OR COPIED OR USED IN WHOLE OR IN PART AS THE BASIS FOR THE MANUFACTURE OR SALE OF ITEMS WITHOUT WRITTEN PERMISSION.
COPYRIGHT © 1974, DIGITAL EQUIPMENT CORPORATION"

REVISIONS		
CHK	CHANGE NO.	REV

digital

DRN. R Reid DATE 12-5-74 ENG R Reid DATE 12-5-74
CHK'D R Reid DATE 12-5-74 BOARD LOCATION: SHEET 1 OF 1
IR4EXC4,120] 02-DEC-74 20:37 NEXT HIGHER ASSEMBLY:
FIRST USED ON OPTION/MODEL: KL10 B-DD-M8522-0

TITLE: IR, DRAM & CARRY
CARRY NETWORK

SIZE	CODE	NUMBER	REV.
D	CS	M8522-0-IR4	

131 MR

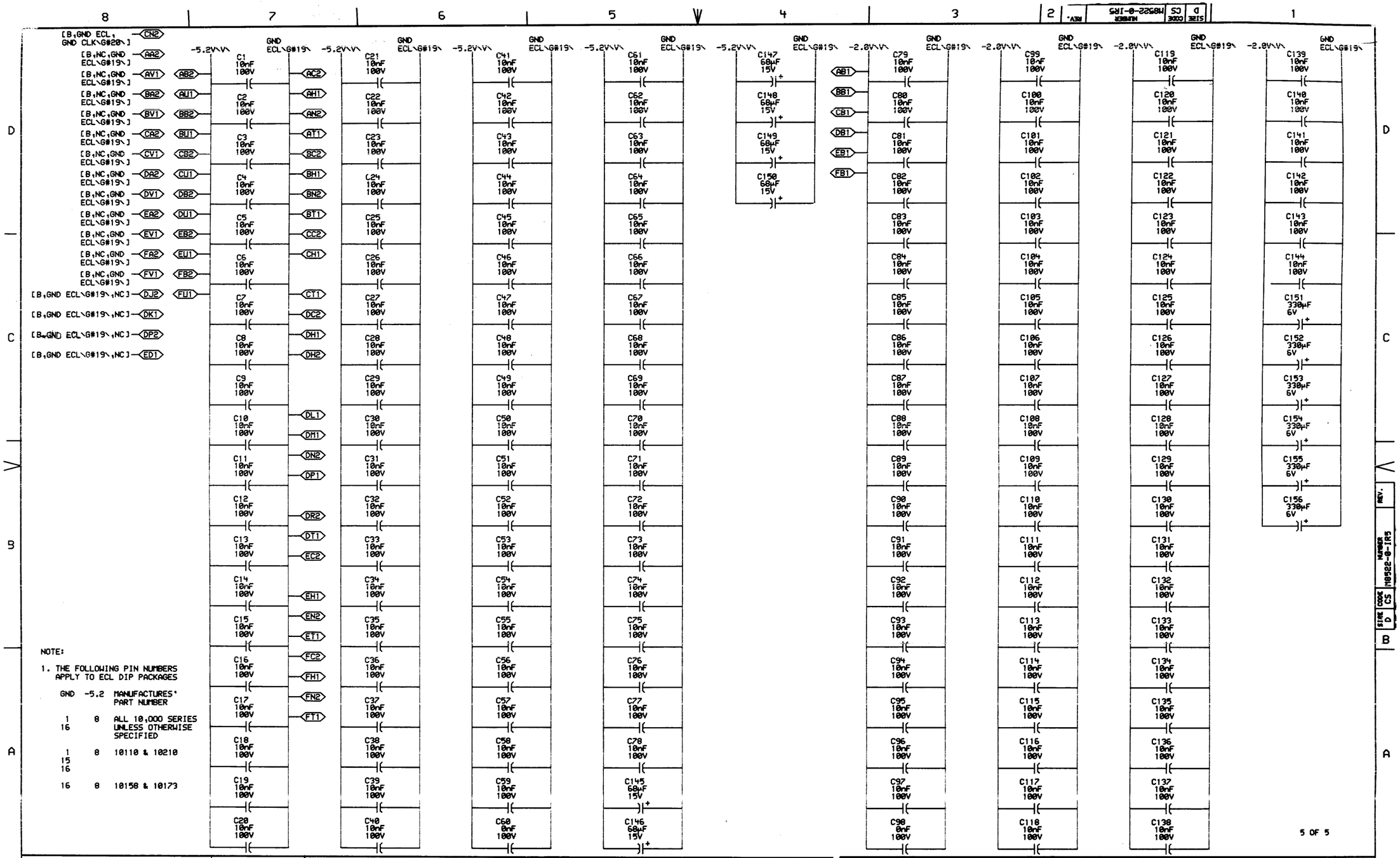

NOTE:

1. THE FOLLOWING PIN NUMBERS APPLY TO ECL DIP PACKAGES

GND	-5.2	
		MANUFACTURES' PART NUMBER
1 16	8	ALL 10,000 SERIES UNLESS OTHERWISE SPECIFIED
1 15 16	8	10110 & 10210
16	8	10158 & 10173

5 OF 5

"THIS DRAWING AND SPECIFICATIONS, HEREIN, ARE THE PROPERTY OF DIGITAL EQUIPMENT CORPORATION AND SHALL NOT BE REPRODUCED OR COPIED OR USED IN WHOLE OR IN PART AS THE BASIS FOR THE MANUFACTURE OR SALE OF ITEMS WITHOUT WRITTEN PERMISSION.
COPYRIGHT © 1974, DIGITAL EQUIPMENT CORPORATION"

REVISIONS		
CHK	CHANGE NO.	REV

digital

DRN. R Reid DATE 12-5-74 ENG. R Reid DATE 12-5-74
CHK'D R Reid DATE 12-5-74 BOARD LOCATION: SHEET 1 OF 1

IR5EX[4,120] 02-DEC-74 20:39 NEXT HIGHER ASSEMBLY:
FIRST USED ON OPTION/MODEL: KL10 B-DD-M8522-0

TITLE: IR, DRAM & CARRY PWR, GND, CAPS

SIZE	CODE	NUMBER	REV.
D	CS	M8522-0-IR5	

1 MR

132

RESISTOR LOC	PIN	SHOWN ON DRW NO	TERMINATES SIGINAL
R 134	1	IR3E	%E12(14)
R 90	1	IR3E	%E17(2)
R 19	1	IR3E	%E40(2)
R 138	1	IR3E	%E45(3)
R 131	1	IR3E	%E57(10)
R 20	1	IR3E	%E57(11)
R 18	1	IR3E	%E57(12)
R 52	1	IR3E	%E60(3)
R 48	1	IR3E	%E62(14)
R 45	1	IR3E	%E65(2)
R 49	1	IR3E	%E75(15)
R 97	1	IR1E	%E75(2)
R 93	1	IR1E	%E76(14)
R 96	1	IR1E	%E76(2)
R 94	1	IR1E	%E76(3)
R 92	1	IR1E	#ER2
R 91	1	IR1E	#ES2
R 135	1	IR3E	-A>B H
R 108	1	IR1E	AD 00 A H
R 51	1	IR3E	-AD 00-05=0 H
R 44	1	IR1E	AD 06 A H
R 142	1	IR3E	-AD 06-11=0 H
R 143	1	IR3E	-AD 12-17=0 H
R 141	1	IR3E	-AD 18-23=0 H
R 139	1	IR3E	-AD 24-29=0 H
R 140	1	IR3E	-AD 30-35=0 H
R 158	1	IR4E	AD CG 00 H
R 114	1	IR4E	AD CG 02 H
R 109	1	IR4E	AD CG 06 H
R 159	1	IR4E	AD CG 06-11 H
R 105	1	IR4E	AD CG 08 H
R 65	1	IR4E	AD CG 12 H
R 115	1	IR4E	AD CG 12-35 H
R 101	1	IR4E	AD CG 14 H
R 150	1	IR4E	AD CG 18 H
R 64	1	IR4E	AD CG 18-23 H
R 152	1	IR4E	AD CG 20 H
R 153	1	IR4E	AD CG 24 H
R 63	1	IR4E	AD CG 24-35 H
R 149	1	IR4E	AD CG 26 H
R 147	1	IR4E	AD CG 30 H
R 154	1	IR4E	AD CG 32 H
R 110	1	IR4E	AD CP 00 H
R 111	1	IR4E	AD CP 02 H
R 107	1	IR4E	AD CP 06 H
R 113	1	IR4E	AD CP 06-11 H
R 104	1	IR4E	AD CP 08 H
R 99	1	IR4E	AD CP 12 H
R 106	1	IR4E	AD CP 12-35 H
R 100	1	IR4E	AD CP 14 H

RESISTOR LOC	PIN	SHOWN ON DRW NO	TERMINATES SIGINAL
R 155	1	IR4E	AD CP 18 H
R 102	1	IR4E	AD CP 18-23 H
R 151	1	IR4E	AD CP 20 H
R 145	1	IR4E	AD CP 24 H
R 98	1	IR4E	AD CP 24-35 H
R 146	1	IR4E	AD CP 26 H
R 148	1	IR4E	AD CP 30 H
R 144	1	IR4E	AD CP 32 H
R 103	1	IR4E	AD CRY 36 H
R 170	1	IR4E	ADX CG 00 H
R 118	1	IR4E	ADX CG 00-11 H
R 173	1	IR4E	ADX CG 03 H
R 168	1	IR4E	ADX CG 06 H
R 169	1	IR4E	ADX CG 09 H
R 176	1	IR4E	ADX CG 12 H
R 123	1	IR4E	ADX CG 12-23 H
R 179	1	IR4E	ADX CG 15 H
R 177	1	IR4E	ADX CG 18 H
R 174	1	IR4E	ADX CG 21 H
R 166	1	IR4E	ADX CG 24 H
R 121	1	IR4E	ADX CG 24-35 H
R 160	1	IR4E	ADX CG 27 H
R 165	1	IR4E	ADX CG 30 H
R 163	1	IR4E	ADX CG 33 H
R 167	1	IR4E	ADX CP 00 H
R 119	1	IR4E	ADX CP 00-11 H
R 171	1	IR4E	ADX CP 03 H
R 172	1	IR4E	ADX CP 06 H
R 162	1	IR4E	ADX CP 09 H
R 129	1	IR4E	ADX CP 12 H
R 122	1	IR4E	ADX CP 12-23 H
R 175	1	IR4E	ADX CP 15 H
R 178	1	IR4E	ADX CP 18 H
R 128	1	IR4E	ADX CP 21 H
R 157	1	IR4E	ADX CP 24 H
R 117	1	IR4E	ADX CP 24-35 H
R 156	1	IR4E	ADX CP 27 H
R 161	1	IR4E	ADX CP 30 H
R 164	1	IR4E	ADX CP 33 H
R 195	1	IR1E	CACHE DATA 00 C H
R 191	1	IR1E	CACHE DATA 01 C H
R 193	1	IR1E	CACHE DATA 02 C H
R 212	1	IR1E	CACHE DATA 03 C H
R 210	1	IR1E	CACHE DATA 04 C H
R 208	1	IR1E	CACHE DATA 05 C H
R 197	1	IR1E	CACHE DATA 06 C H
R 198	1	IR1E	CACHE DATA 07 C H
R 196	1	IR1E	CACHE DATA 08 C H
R 202	1	IR1E	CACHE DATA 09 C H
R 203	1	IR1E	CACHE DATA 10 C H.

RESISTOR LOC	PIN	SHOWN ON DRW NO	TERMINATES SIGINAL
R 206	1	IR1E	CACHE DATA 11 C H
R 201	1	IR1E	CACHE DATA 12 C H
R 78	1	IR1E	CLK IR H
R 79	1	IR1E	-CON LOAD DRAM H
R 80	1	IR1E	-CON LOAD IR H
R 137	1	IR3E	CRAM # 07 F H
R 132	1	IR3E	CRAM # 08 F H
R 120	1	IR4E	CTL AD LONG H
R 124	1	IR4E	CTL ADX CRY 36 A H
R 182	1	IR4E	-CTL INH CRY 18 H
R 126	1	IR4E	CTL SPEC/GEN CRY 18 H
R 43	1	IR3E	-DIAG LOAD FUNC 06X H
R 125	1	IR1E	DR ADR 00 A H
R 34	1	IR1E	-DR ADR 00 A H
R 188	1	IR1E	DR ADR 01 A H
R 29	1	IR1E	-DR ADR 01 A H
R 186	1	IR1E	DR ADR 02 A H
R 33	1	IR1E	-DR ADR 02 A H
R 1	1	IR1E	DR ADR 03 H
R 183	1	IR1E	DR ADR 03 A H
R 35	1	IR1E	-DR ADR 03 A H
R 5	1	IR1E	DR ADR 04 H
R 180	1	IR1E	DR ADR 04 A H
R 27	1	IR1E	-DR ADR 04 A H
R 8	1	IR1E	DR ADR 05 H
R 185	1	IR1E	DR ADR 05 A H
R 26	1	IR1E	-DR ADR 05 A H
R 7	1	IR1E	DR ADR 06 H
R 130	1	IR1E	DR ADR 06 A H
R 28	1	IR1E	-DR ADR 06 A H
R 6	1	IR1E	DR ADR 07 H
R 189	1	IR1E	DR ADR 07 A H
R 25	1	IR1E	-DR ADR 07 A H
R 72	1	IR1E	DR ADR 08 H
R 39	1	IR3E	DR DIAG 04 H
R 42	1	IR3E	DR DIAG 05 H
R 46	1	IR3E	DR DIAG 06 H
R 127	1	IR3E	-DR DIAG READ H
R 21	1	IR3E	DR EBUS [N+0] H
R 24	1	IR3E	DR EBUS [N+1] H
R 9	1	IR3E	DR EBUS [N+2] H
R 66	1	IR3E	DR EBUS [N+3] H
R 68	1	IR3E	DR EBUS [N+4] H
R 69	1	IR3E	DR EBUS [N+5] H
R 38	1	IR2E	DRAM A00 X H
R 40	1	IR2E	DRAM A00 Y H
R 36	1	IR2E	DRAM A01 X H
R 41	1	IR2E	DRAM A01 Y H
R 32	1	IR2E	DRAM A02 X H
R 37	1	IR2E	DRAM A02 Y H

RESISTOR LOC	PIN	SHOWN ON DRW NO	TERMINATES SIGINAL
R 74	1	IR2E	DRAM B00 X H
R 76	1	IR2E	DRAM B00 Y H
R 77	1	IR2E	DRAM B01 X H
R 73	1	IR2E	DRAM B01 Y H
R 70	1	IR2E	DRAM B02 X H
R 71	1	IR2E	DRAM B02 Y H
R 87	1	IR2E	DRAM J01 H
R 86	1	IR2E	DRAM J02 H
R 81	1	IR2E	DRAM J03 H
R 83	1	IR2E	DRAM J04 H
R 16	1	IR2E	DRAM J07 H
R 17	1	IR2E	DRAM J08 X H
R 14	1	IR2E	DRAM J08 Y H
R 11	1	IR2E	DRAM J09 X H
R 10	1	IR2E	DRAM J09 Y H
R 13	1	IR2E	DRAM J10 X H
R 12	1	IR2E	DRAM J10 Y H
R 67	1	IR3E	-DRAM LOAD J COMMON H
R 62	1	IR3E	-DRAM LOAD J EVEN H
R 61	1	IR3E	-DRAM LOAD J ODD H
R 23	1	IR3E	-DRAM LOAD X,Y EVEN H
R 22	1	IR3E	-DRAM LOAD X,Y ODD H
R 112	1	IR1E	DRAM PAR H
R 89	1	IR1E	DRAM PAR J 07 H
R 88	1	IR1E	DRAM PAR J 08 H
R 84	1	IR1E	DRAM PAR J 09 H
R 85	1	IR1E	DRAM PAR J 10 H
R 30	1	IR2E	DRAM PAR X H
R 31	1	IR2E	DRAM PAR Y H
R 187	1	IR4E	GEN CRY 36 H
R 15	1	IR1E	HOLD DRAM A H
R 56	1	IR1E	HOLD DRAM B H
R 75	1	IR1E	HOLD DRAM C H
R 211	1	IR1E	HOLD IR A H
R 207	1	IR1E	HOLD IR B H
R 199	1	IR1E	HOLD IR C H
R 95	1	IR1E	INSTR 7XX H
R 136	1	IR3E	IR #06=07 H
R 133	1	IR3E	-IR #06=07 H
R 3	1	IR1E	IR 00 H
R 4	1	IR1E	IR 01 H
R 2	1	IR1E	IR 02 H
R 57	1	IR1E	IR 10 H
R 60	1	IR1E	IR 11 H
R 59	1	IR1E	IR 12 H
R 181	1	IR3E	IR EN AC H
R 58	1	IR3E	-IR EN AC H
R 184	1	IR3E	IR EN I/O, JRST H
R 50	1	IR3E	-IR EN I/O, JRST H
R 82	1	IR3E	-IR JRST H

RESISTOR LOC	PIN	SHOWN ON DRW NO	TERMINATES SIGINAL
R 116	1	IR4E	PROP CRY 36 H

NOTE:

1. ENTRIES ARE SORTED BY SIGNAL NAME
2. ALL TERMINATION RESISTORS ARE 68Ω 1/4W 5% AND ARE CONNECTED TO -2.0V UNLESS OTHERWISE SPECIFIED
3. % INDICATES OUTPUT OF DIP LOC AND () INDICATES PIN NUMBER
4. ALL 56Ω RESISTORS ARE 1/4W 5% TERMINATORS AND ARE CONNECTED TO -2.0V UNLESS OTHERWISE SPECIFIED

"THIS DRAWING AND SPECIFICATIONS, HEREIN, ARE THE PROPERTY OF DIGITAL EQUIPMENT CORPORATION AND SHALL NOT BE REPRODUCED OR COPIED OR USED IN WHOLE OR IN PART AS THE BASIS FOR THE MANUFACTURE OR SALE OF ITEMS WITHOUT WRITTEN PERMISSION.
COPYRIGHT © 1974, DIGITAL EQUIPMENT CORPORATION"

REVISIONS		
CHK	CHANGE NO.	REV

digital

DRN. C Smith DATE 27-NOV-74 ENG. R Reid DATE 12-5-74
CHK'D. R Reid DATE 12-5-74 BOARD LOCATION: SHEET 1 OF 1
M8522[4,427] 03-DEC-74 22:06 NEXT HIGHER ASSEMBLY: B-DD-M8522-0
FIRST USED ON OPTION/MODEL: KL10

TITLE: IR, DRAM & CARRY TERMINATORS

SIZE	CODE	NUMBER	REV.
D	CS	M8522-0-RES	

133

REVISION CONTROL SHEET

CUSTOMER PRINT SET	MFG SET	DRAWING NO	NO OF SHT	DESCRIPTION	OPTION NO/FILE DATE	REVISIONS						
				MODULE REVISION		A	B	C	C	D	D	
		D-UA-M8524-Ø-Ø	5	SCAD. PC FLAGS		-	A	B	C	D	DI	
		D-CS-M8524-Ø-SCD1	1	SCAD. PC FLAGS SCAD.SCADA. SCADB		-	A	A	A	B	B	
		D-CS-M8524-Ø-SCD2	1	SCAD. PC FLAGS SC.SCM.FE		-	A	A	A	B	B	
		D-CS-M8524-Ø-SCD3	1	SCAD. PC FLAGS ARMM.DIAG MIXER		-	A	B	B	C	C	
		D-CS-M8524-Ø-SCD4	1	SCAD. PC FLAGS PC FLAGS		-	A	A	A	B	C	
		D-CS-M8524-Ø-SCD5	1	SCAD. PC FLAGS PC FLAGS		-	A	B	B	C	C	
		D-CS-M8524-Ø-SCD6	1	SCD. PC FLAGS POWER.GND.CAPS		-	A	A	A	B	C	
		D-CS-M8524-Ø-RES	1	SCAD. PC FLAGS TERMINATORS		-	A	B	B	C	C	
		K-CO-M8524-Ø-4	1	SCAD. PC FLAGS (CALDEC DATA BASE)		B	B	B	B	B	B	SEE SHEET 3
		D-AH-M8524-Ø-5	4	SCAD. PC FLAGS		A	A	A	A	A	A	
		B-MH-M8524-Ø-6	1	MODULE ECO HISTORY		REF	-	-	-	-	-	
		5010653	-	ETCH CIRCUIT BOARD		B	B	B	B	B	B	
		P00-M8524-ØØ		PROCESS SHEET (REF ONLY)		-	-	-	-	-	-	
			-									
					ECO NO	ORIG	M8524-1	M8524-2	00003	00004	00005	
										REWORK VERSION	RELAYOUT VERSION	

CUSTOMER PRINT SET CODES
X = PRINT OF DOCUMENT INCLUDED IN PRINT SET
C = INCLUDES ALL PRINTS INDICATED ON DOCUMENT
S = CONFIDENTIAL AUTHORIZED SIGNATURE REQUIRED

TITLE	SHEET	SIZE	CODE	NUMBER	REV
SCAD PC FLAGS	SHEET 2 OF 3	B	DD	M8524-Ø	E

MR

"THIS DRAWING AND SPECIFICATIONS, HEREIN, ARE THE PROPERTY OF DIGITAL EQUIPMENT CORPORATION AND SHALL NOT BE REPRODUCED OR COPIED OR USED IN WHOLE OR IN PART AS THE BASIS FOR THE MANUFACTURE OR SALE OF ITEMS WITHOUT WRITTEN PERMISSION. COPYRIGHT © 1974 DIGITAL EQUIPMENT CORPORATION"

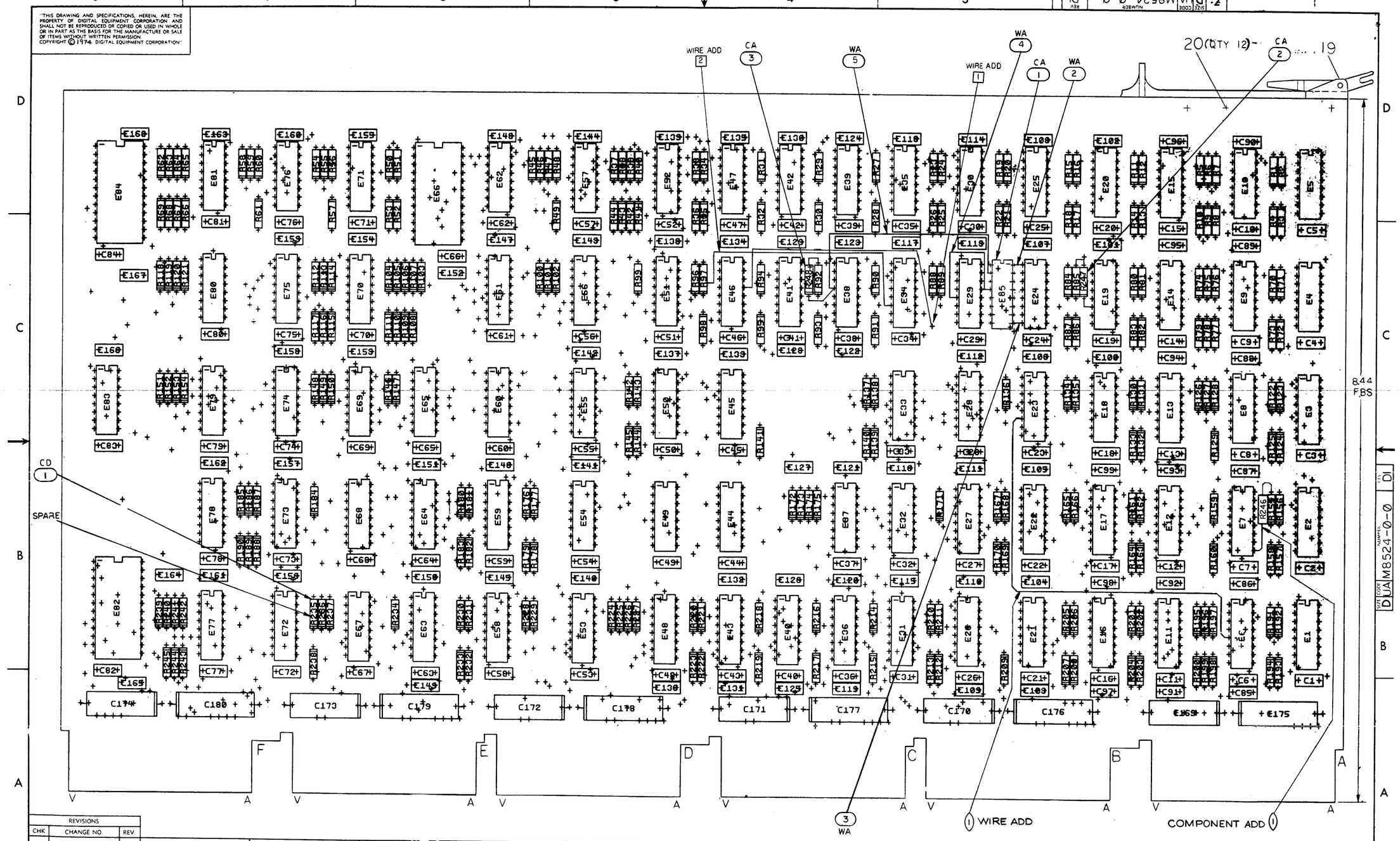

REVISIONS		
CHK	CHANGE NO.	REV.

TITLE	SIZE	CODE	NUMBER	REV.
SCAD PC FLAGS	D	UA	M8524-0-0	D1
SCALE NONE	SHEET 2 OF 7		DIST.	

135

REVISION CONTROL SHEET

CUSTOMER PRINT SET	MFG SET	DRAWING NO	NO OF SHT	DESCRIPTION	OPTION NO/FILE DATE	REVISIONS (NEW LAYOUT VERSION)
				MODULE REVISION		E
		D-UA-M8524-Ø-Ø	5	SCAD, PC FLAGS		E
		D-CS-M8524-Ø-SCD1	1	SCAD, PC FLAGS SCAD, SCADA, SCADB		B
		D-CS-M8524-Ø-SCD2	1	SCAD, PC FLAGS SC, SCM, FE		B
		D-CS-M8524-Ø-SCD3	1	SCAD, PC FLAGS ARMM,DIAG MIXER		C
		D-CS-M8524-Ø-SCD4	1	SCAD, PC FLAGS PC FLAGS		C
		D-CS-M8524-Ø-SCD5	1	SCAD, PC FLAGS PC FLAGS		C
		D-CS-M8524-Ø-SCD6	1	SCD, PC FLAGS POWER,GND,CAPS		C
		D-CS-M8524-Ø-RES	1	SCAD, PC FLAGS TERMINATORS		C
		K-CO-M8524-Ø-4	1	SCAD, PC FLAGS (CALDEC DATA BASE)		C
		D-AH-M8524-Ø-5	4	SCAD, PC FLAGS		B
		B-MH-M8524-Ø-6	1	MODULE ECO HISTORY		-
		5010653	-	ETCH CIRCUIT BOARD		C
		POO-M8524-ØØ		PROCESS SHEET (REF ONLY)		-

CUSTOMER PRINT SET CODES

X = PRINT OF DOCUMENT INCLUDED IN PRINT SET
C = INCLUDES ALL PRINTS INDICATED ON DOCUMENT
S = CONFIDENTIAL AUTHORIZED SIGNATURE REQUIRED

ECO NO: 00005

TITLE	SHEET	SIZE	CODE	NUMBER	REV
SCAD PC FLAGS	3 OF 3	B	DD	M8524-Ø	E

MR

136

THE INFORMATION AND SPECIFICATIONS, HEREIN, ARE THE PROPERTY OF DIGITAL EQUIPMENT CORPORATION AND SHALL NOT BE REPRODUCED OR COPIED OR USED IN WHOLE OR IN PART FOR THE BENEFIT OF ANY PERSON OR FOR THE BENEFIT OF ANY OTHER PERSON WITHOUT WRITTEN PERMISSION.
COPYRIGHT © 1977 DIGITAL EQUIPMENT CORPORATION

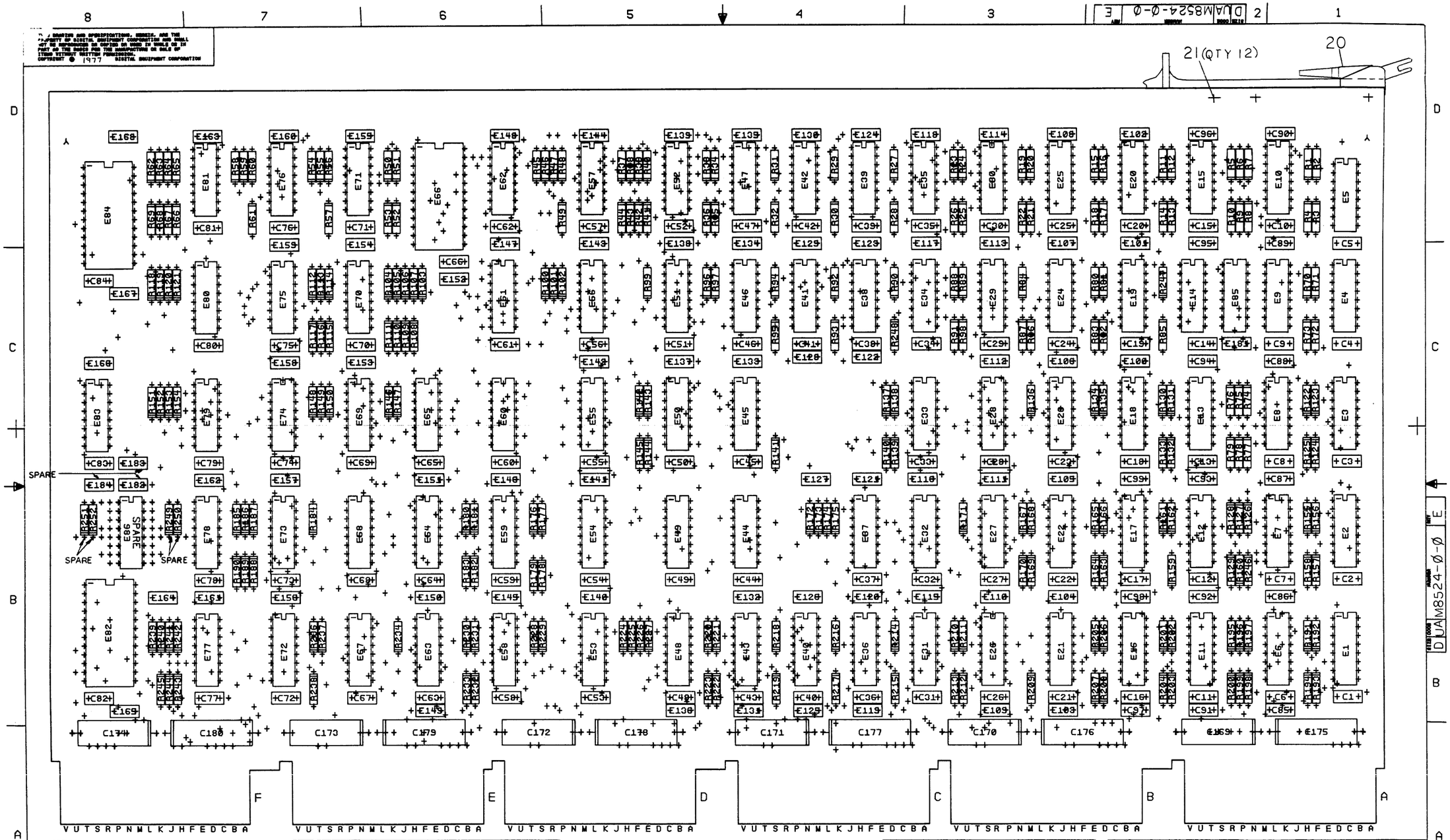

NOTES:

REV	CHANGE NO	CHK

SIGNATURES	DATE
DRN. E Wilson	13/MAR/77
CHK'D. R W Carter	14/MAR/77
ENG. E Cash	8/4/77
PROJ.ENG. E Cash	8/4/77
PROD. W Bishop	4 Aug 77
SCALE 2/1	
SHT. 2 OF 5	

ETCH REV.	C
P.C. DESIGN DATA BASE REV.	C

digital

TITLE SCAD, PC FLAG

SIZE	CODE	NUMBER	REV
D	UA	M8524-0-0	E

NEXT HIGHER ASSY. B-DD-M8524-0

137

MR 1 MS# 104464C

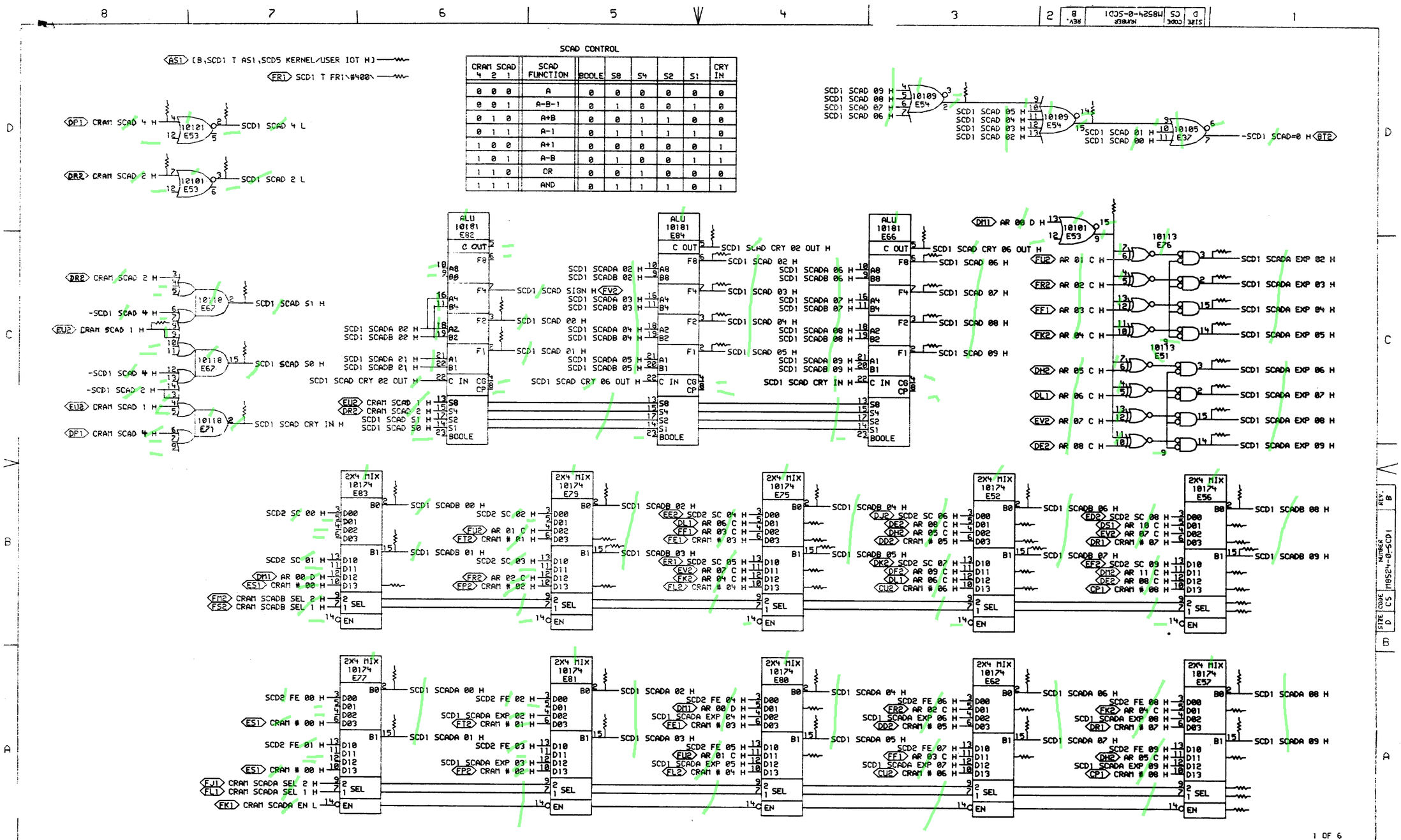

SCAD CONTROL

CRAM SCAD 4	2	1	SCAD FUNCTION	BOOLE	S8	S4	S2	S1	CRY IN
0	0	0	A	0	0	0	0	0	0
0	0	1	A-B-1	0	1	0	0	1	0
0	1	0	A+B	0	0	1	1	0	0
0	1	1	A-1	0	1	1	1	1	0
1	0	0	A+1	0	0	0	0	0	1
1	0	1	A-B	0	1	0	0	1	1
1	1	0	OR	0	0	1	0	0	0
1	1	1	AND	0	1	1	1	0	1

THIS DRAWING AND SPECIFICATIONS, HEREIN, ARE THE PROPERTY OF DIGITAL EQUIPMENT CORPORATION AND SHALL NOT BE REPRODUCED OR COPIED OR USED IN WHOLE OR IN PART AS A BASIS FOR THE MANUFACTURE OR SALE OF ITEMS WITHOUT WRITTEN PERMISSION. COPYRIGHT © 1976 DIGITAL EQUIPMENT CORPORATION

REVISIONS		
CHK	CHANGE NO.	REV
G.M.	M8524-00004	B
	17MAR77	
EGGERS		
	22-MAR-77	

DRN. Tom Eggers DATE 21-DEC-76 ENG. Tom Eggers DATE 21Dec76

CHK'D. Tom Eggers DATE 21Dec76 BOARD LOCATION: 4AF54

SCD1EY.DRW(4,120) 17-DEC-76 18:50 SHEET 1 OF 1

FIRST USED ON OPTION/MODEL: KL10 NEXT HIGHER ASSEMBLY: B-DD-M8524-0

TITLE: SCAD, PC FLAGS SCAD,SCADA,SCADB

SIZE	CODE	NUMBER	REV.
D	CS	M8524-0-SCD1	B

MR 1

138

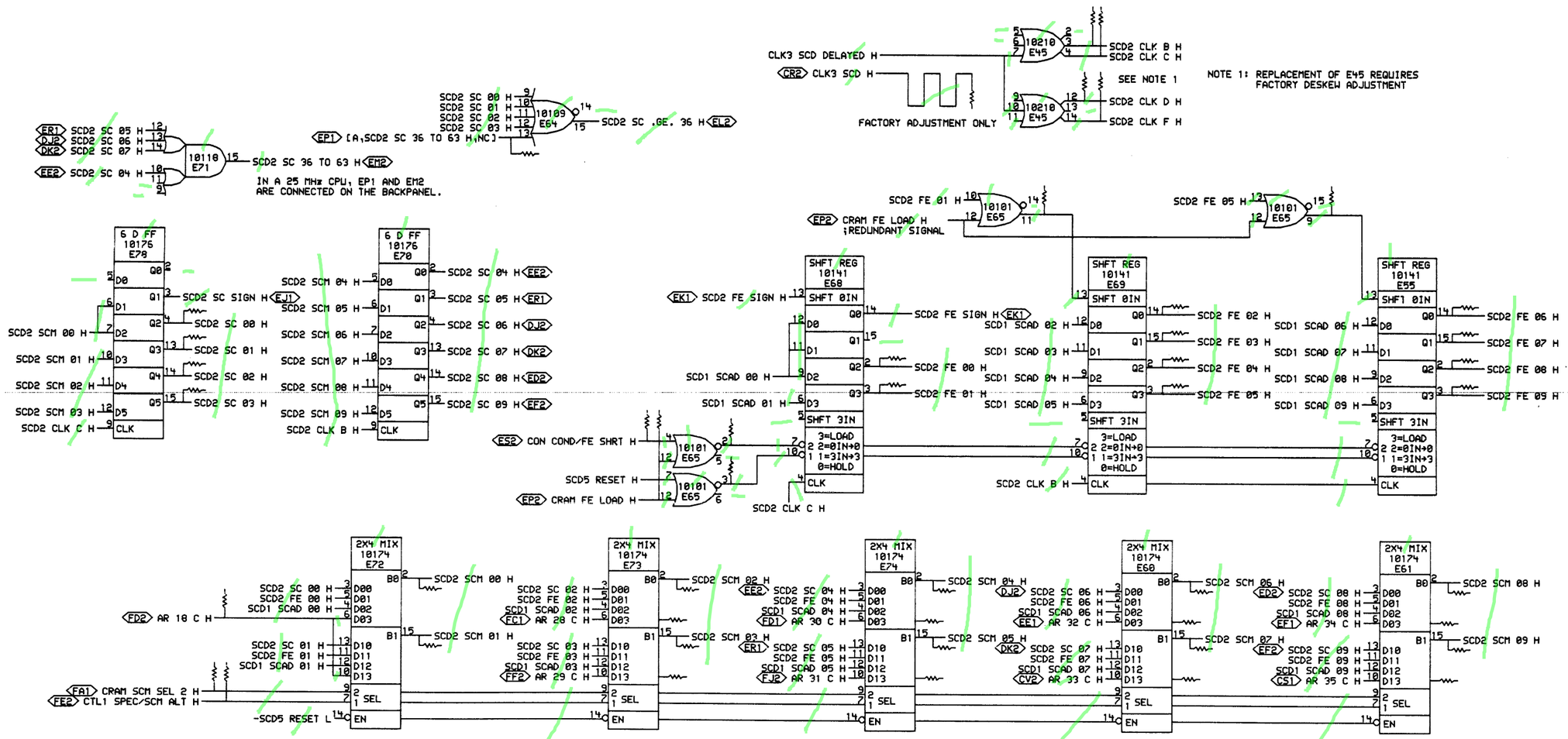

2 OF 6

"THIS DRAWING AND SPECIFICATIONS, HEREIN, ARE THE PROPERTY OF DIGITAL EQUIPMENT CORPORATION AND SHALL NOT BE REPRODUCED OR COPIED OR USED IN WHOLE OR IN PART AS THE BASIS FOR THE MANUFACTURE OR SALE OF ITEMS WITHOUT WRITTEN PERMISSION. COPYRIGHT © 1976, DIGITAL EQUIPMENT CORPORATION"

REVISIONS		
CHK	CHANGE NO.	REV
	M8524-00004	B

digital

DRN.	DATE 20-DEC-76	ENG.	DATE 20Dec76
CHK.	DATE 20Dec76	BOARD LOCATION: 4AF54	
SCD2EY.RVBL4,120]	17-DEC-76 19:32	SHEET 1 OF 1	
FIRST USED ON OPTION/MODEL: KL10		NEXT HIGHER ASSEMBLY: B-DD-M8524-0	

TITLE: SCAD, PC FLAGS SC,SCM,FE

SIZE	CODE	NUMBER	REV.
D	CS	M8524-0-SCD2	B

139

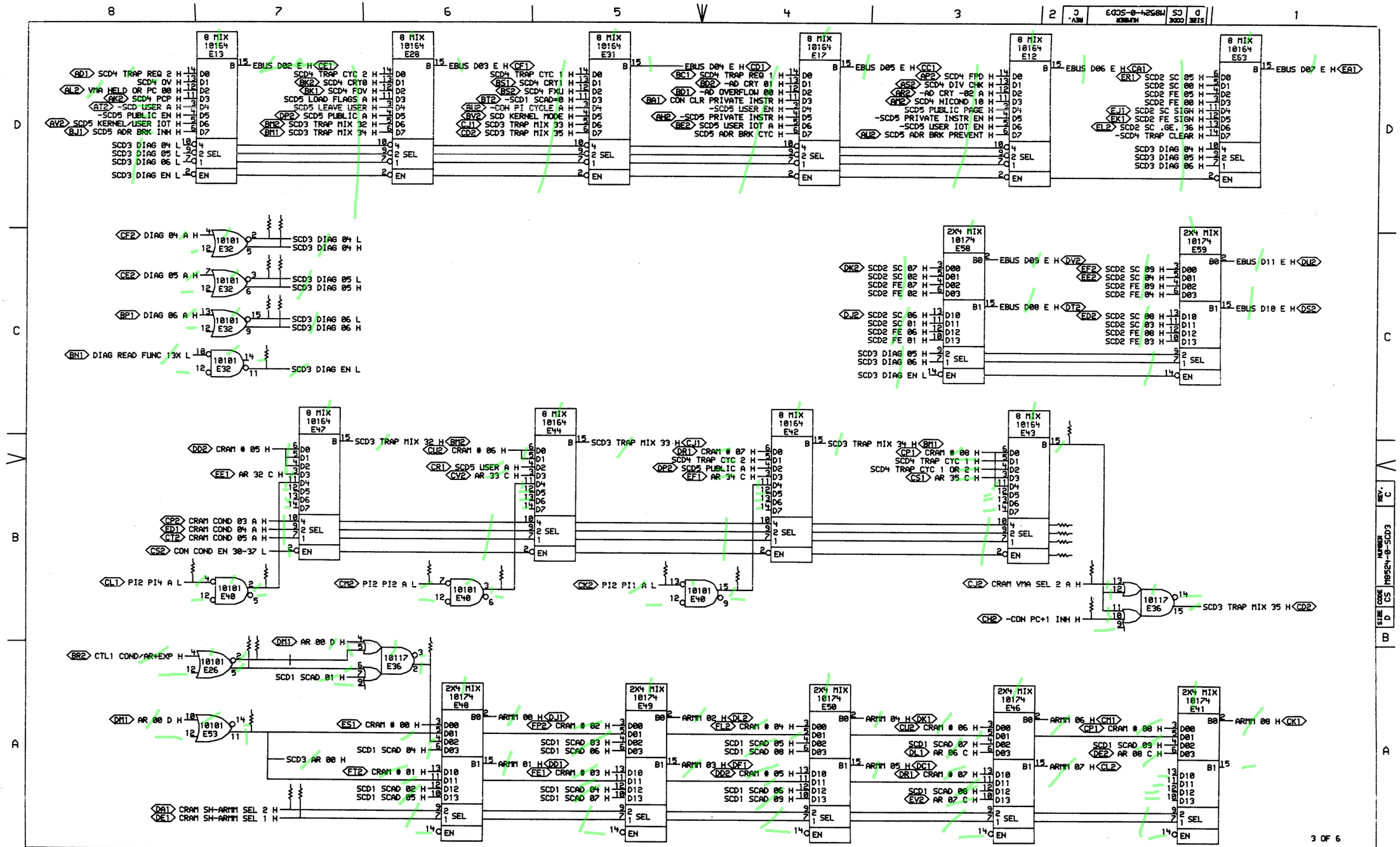

"THIS DRAWING AND SPECIFICATIONS, HEREIN, ARE THE PROPERTY OF DIGITAL EQUIPMENT CORPORATION AND SHALL NOT BE REPRODUCED OR COPIED OR USED IN WHOLE OR IN PART AS THE BASIS FOR THE MANUFACTURE OR SALE OF ITEMS WITHOUT WRITTEN PERMISSION. COPYRIGHT © 1976, DIGITAL EQUIPMENT CORPORATION"

REVISIONS		
CHK	CHANGE NO.	REV
GOV.	M8524-00004	C
	T. EGGERS	

digital

DRN. | CHK'D | DATE 21-DEC-76 | ENG. | DATE 21 Dec 76 | DATE 21 Dec 76 | BOARD LOCATION: 4AF54 | SHEET 1 OF 1

SCD3ET.DRW[4,120] 20-DEC-76 22:45 | NEXT HIGHER ASSEMBLY: B-DD-M8524-0

FIRST USED ON OPTION/MODEL: KL10

TITLE: SCAD, PC FLAGS ARMM, DIAG MIXER

SIZE	CODE	NUMBER	REV.
D	CS	M8524-0-SCD3	C

MR

140

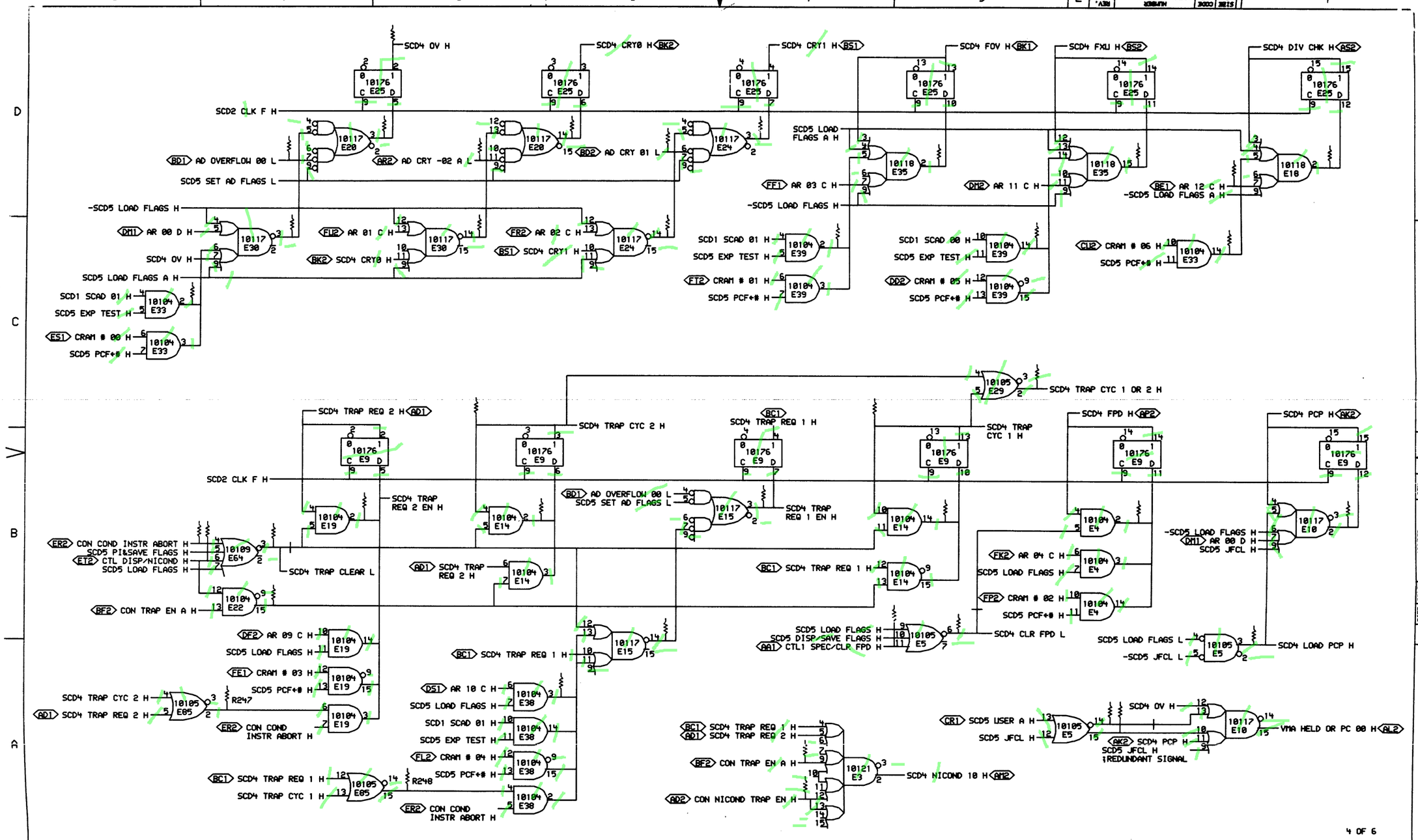

"THIS DRAWING AND SPECIFICATIONS, HEREIN, ARE THE PROPERTY OF DIGITAL EQUIPMENT CORPORATION AND SHALL NOT BE REPRODUCED OR COPIED OR USED IN WHOLE OR IN PART AS THE BASIS FOR THE MANUFACTURE OR SALE OF ITEMS WITHOUT WRITTEN PERMISSION. COPYRIGHT © 1977, DIGITAL EQUIPMENT CORPORATION"

REVISIONS		
CHK	CHANGE NO.	REV
	M8524-00005	C
	21-SEP-77 J. EGGERS	
	26 OCT 77	

digital

DRN.	DATE 01-JUN-77	ENG.	DATE 22 Oct 77
CHK.	DATE	BOARD LOCATION: 4AF54	
		SHEET 1 OF 1	
SCD4EY.DRW[4,555] 01-JUN-77 10:13		NEXT HIGHER ASSEMBLY: B-DD-M8524-0	
FIRST USED ON OPTION/MODEL: KL10			

TITLE: SCAD, PC FLAGS
PC FLAGS

SIZE	CODE	NUMBER	REV.
D	CS	M8524-0-SCD4	C

141 MR

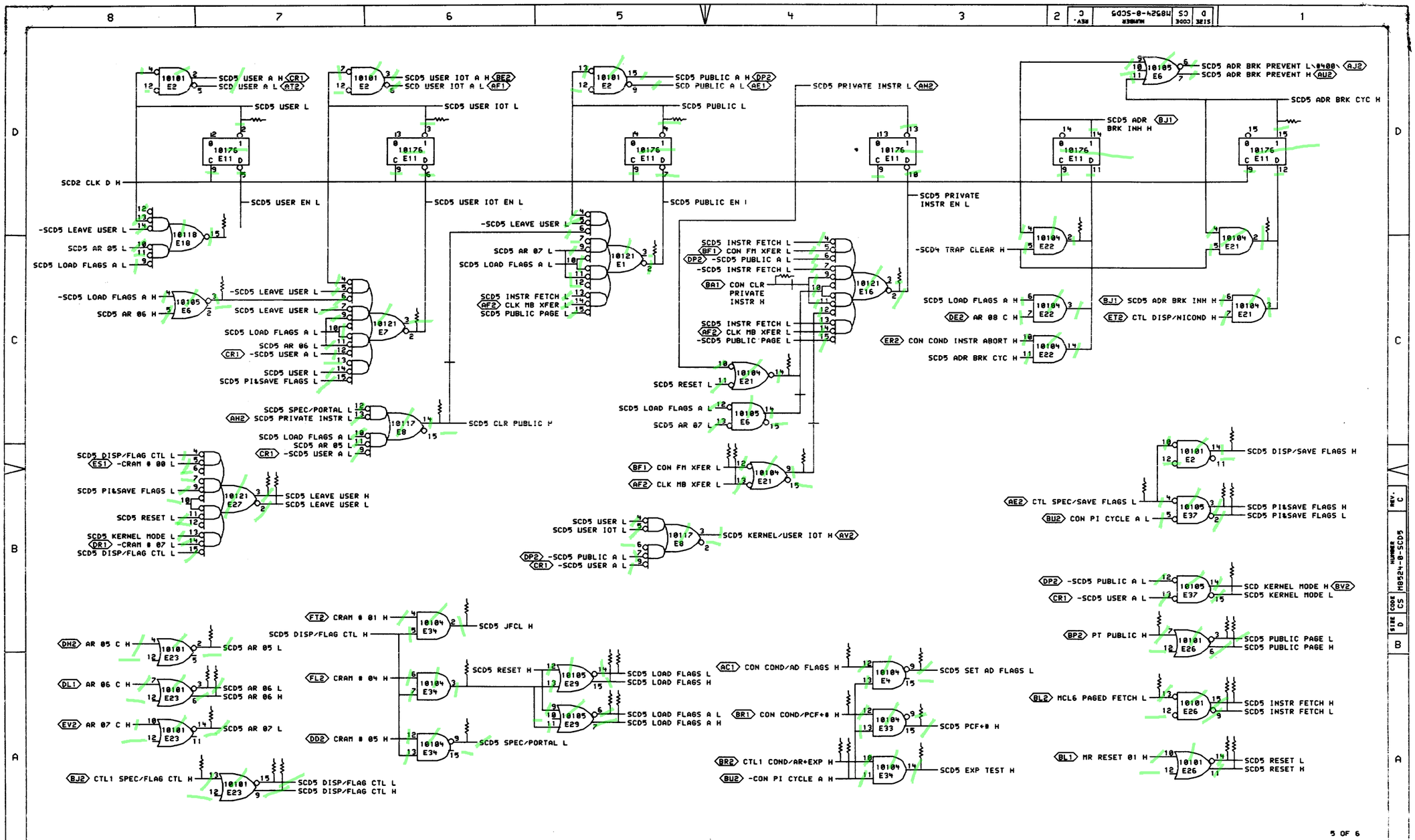

"THIS DRAWING AND SPECIFICATIONS, HEREIN, ARE THE PROPERTY OF DIGITAL EQUIPMENT CORPORATION AND SHALL NOT BE REPRODUCED OR COPIED OR USED IN WHOLE OR IN PART AS THE BASIS FOR THE MANUFACTURE OR SALE OF ITEMS WITHOUT WRITTEN PERMISSION. COPYRIGHT © 1979, DIGITAL EQUIPMENT CORPORATION"

REVISIONS		
CHK	CHANGE NO.	REV
R.V.	M8524-00004	C
L GROSSE		
T EGGERS		

digital

DRN. Tooby DATE 01-OCT-79 ENG. TOM EGGERS DATE 21 DEC 76
CHK'D. TOM EGGERS DATE 21 DEC 76 BOARD LOCATION: 4AF54
SHEET 1 OF 1
PS:<LUCIER.TRAIN>SCD5ET.RVC 17-DEC-76 00:00 NEXT HIGHER ASSEMBLY: B-DD-M8524-0
FIRST USED ON OPTION/MODEL: KL10

TITLE: SCAD, PC FLAGS
PC FLAGS

SIZE	CODE	NUMBER	REV.
D	CS	M8524-0-SCD5	C

MR

142

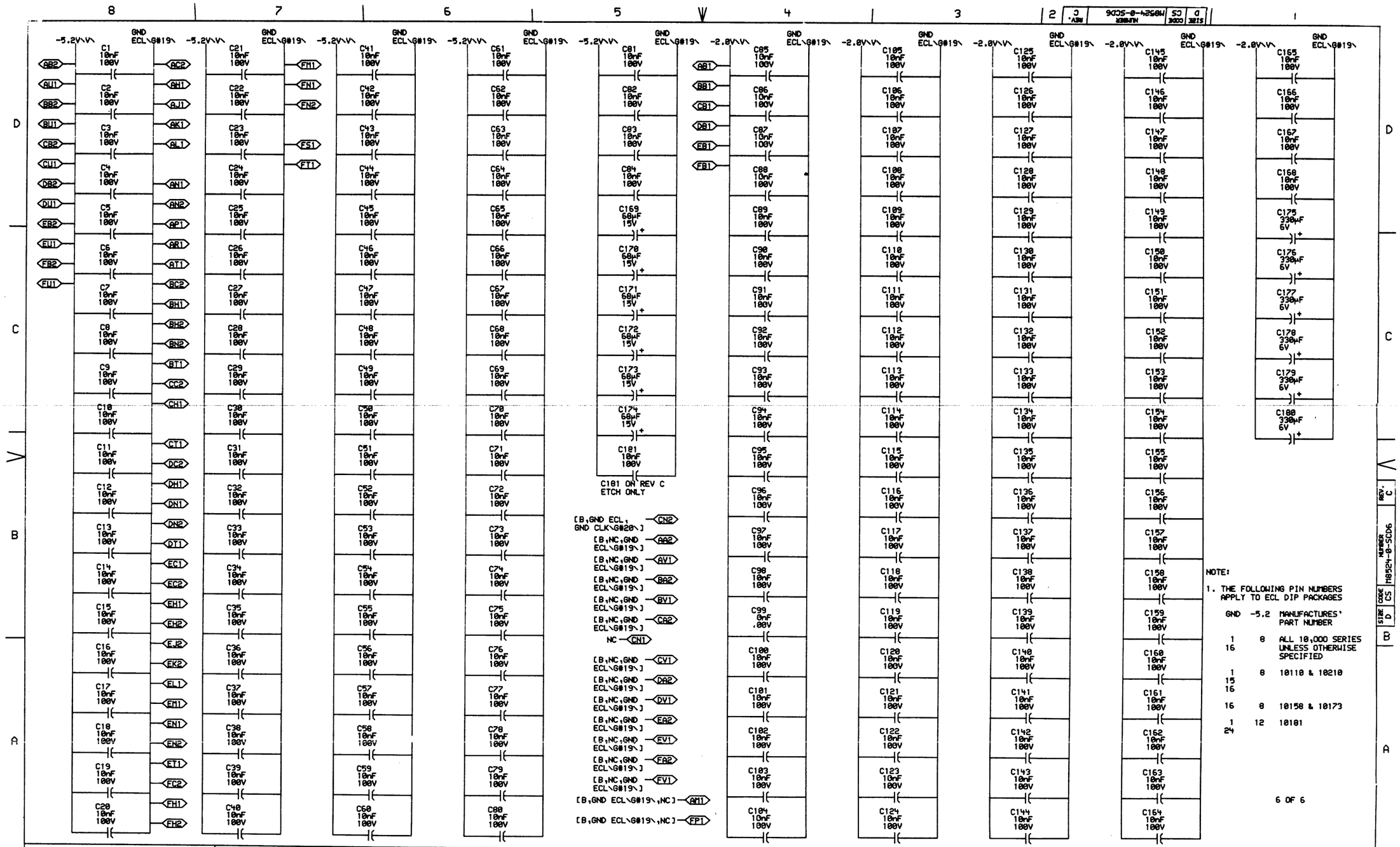

NOTE:

1. THE FOLLOWING PIN NUMBERS APPLY TO ECL DIP PACKAGES

GND	-5.2	MANUFACTURES' PART NUMBER
1 16	8	ALL 10,000 SERIES UNLESS OTHERWISE SPECIFIED
1 15 16	8	10110 & 10210
16	8	10158 & 10173
1 24	12	10181

6 OF 6

"THIS DRAWING AND SPECIFICATIONS, HEREIN, ARE THE PROPERTY OF DIGITAL EQUIPMENT CORPORATION AND SHALL NOT BE REPRODUCED OR COPIED OR USED IN WHOLE OR IN PART AS THE BASIS FOR THE MANUFACTURE OR SALE OF ITEMS WITHOUT WRITTEN PERMISSION.
COPYRIGHT © 1977, DIGITAL EQUIPMENT CORPORATION"

REVISIONS		
CHK	CHANGE NO.	REV
	M8524-0005	C
	T. EGGERS	

digital

DRN. T. Eggers	DATE 02-JUN-77	ENG. Tom Eggers	DATE 23-JUN-77
CHK'D	DATE 5/27/77	BOARD LOCATION: 4AF54	
SCD6EY.DRW[4,555] 02-JUN-77 13:36		SHEET 1 OF 1	
FIRST USED ON OPTION/MODEL: KL10		NEXT HIGHER ASSEMBLY: B-DD-M8524-0	

TITLE: SCD, PC FLAGS POWER, GND, CAPS

SIZE	CODE	NUMBER	REV.
D	CS	M8524-0-SCD6	C

RESISTOR LOC(PIN)	SHOWN ON DRW#	REF	VALUE	TERMINATES SIGNAL
R75(1)	SCD4	B1	68Ω	%E10(2)
R78(1)	SCD4	B3	68Ω	%E14(14)
R82(1)	SCD4	B6	68Ω	%E14(2)
R10(1)	SCD4	B5	68Ω	%E15(14)
R15(1)	SCD4	D1	68Ω	%E18(2)
R22(1)	SCD4	D5	68Ω	%E20(14)
R20(1)	SCD4	D6	68Ω	%E20(3)
R195(1)	SCD5	C1	68Ω	%E21(2)
R201(1)	SCD5	B4	68Ω	%E21(9)
R81(1)	SCD4	B7	68Ω	%E22(15)
R200(1)	SCD5	C2	68Ω	%E22(2)
R86(1)	SCD4	C5	68Ω	%E24(14)
R21(1)	SCD4	D4	68Ω	%E24(3)
R216(1)	SCD3	A7	68Ω	%E26(2)
R217(1)	SCD3	A7	68Ω	%E26(5)
R11(1)	SCD4	C6	68Ω	%E30(14)
R16(1)	SCD4	C7	68Ω	%E30(3)
R130(1)	SCD4	C2	68Ω	%E33(14)
R24(1)	SCD4	C8	68Ω	%E33(2)
R89(1)	SCD5	A6	68Ω	%E34(3)
R17(1)	SCD4	D2	68Ω	%E35(15)
R18(1)	SCD4	D3	68Ω	%E35(2)
R224(1)	SCD3	A6	68Ω	%E36(2)
R9(1)	SCD4	A5	68Ω	%E38(2)
R23(1)	SCD4	C3	68Ω	%E39(14)
R27(1)	SCD4	C4	68Ω	%E39(2)
R79(1)	SCD4	B2	68Ω	%E4(2)
R31(1)	SCD3	B4	68Ω	%E40(15)
R42(1)	SCD3	B6	68Ω	%E40(2)
R173(1)	SCD3	B5	68Ω	%E40(3)
R214(1)	SCD3	B2	68Ω	%E43(15)
R6(1)	SCD4	A2	68Ω	%E5(14)
R8(1)	SCD4	A2	68Ω	%E5(15)
R54(1)	SCD1	D2	68Ω	%E53(9)
R174(1)	SCD1	D2	68Ω	%E54(15)
R178(1)	SCD1	D3	68Ω	%E54(2)
R204(1)	SCD5	C4	68Ω	%E6(14)
R158(1)	SCD5	C7	68Ω	%E6(3)
R150(1)	SCD2	C3	68Ω	%E65(11)
R145(1)	SCD2	B5	68Ω	%E65(2)

RESISTOR LOC(PIN)	SHOWN ON DRW#	REF	VALUE	TERMINATES SIGNAL
R144(1)	SCD2	B5	68Ω	%E65(3)
R143(1)	SCD2	C2	68Ω	%E65(9)
R248(1)	SCD4	A6	68Ω	%E85(15)
R247(1)	SCD4	A7	68Ω	%E85(2)
R12(1)	SCD4	D6	68Ω	-AD CRY -02 A H
R87(1)	SCD4	D5	68Ω	-AD CRY 01 H
R13(1)	SCD4	D7	68Ω	-AD OVERFLOW 00 H
R151(1)	SCD1	A4	68Ω	AR 00 D H
R19(1)	SCD1	A4	68Ω	AR 01 C H
R84(1)	SCD1	A3	68Ω	AR 02 C H
R26(1)	SCD1	A3	68Ω	AR 03 C H
R77(1)	SCD1	A1	68Ω	AR 04 C H
R134(1)	SCD1	A1	68Ω	AR 05 C H
R136(1)	SCD1	B4	68Ω	AR 06 C H
R133(1)	SCD1	B4	68Ω	AR 07 C H
R169(1)	SCD1	B3	68Ω	AR 08 C H
R83(1)	SCD1	B3	68Ω	AR 09 C H
R90(1)	SCD1	B1	68Ω	AR 10 C H
R25(1)	SCD1	B1	68Ω	AR 11 C H
R132(1)	SCD4	D2	68Ω	AR 12 C H
R238(1)	SCD2	B7	68Ω	AR 18 C H
R187(1)	SCD2	B5	68Ω	AR 28 C H
R184(1)	SCD2	B5	68Ω	AR 29 C H
R148(1)	SCD2	B4	68Ω	AR 30 C H
R149(1)	SCD2	B4	68Ω	AR 31 C H
R40(1)	SCD2	B3	68Ω	AR 32 C H
R142(1)	SCD2	B3	68Ω	AR 33 C H
R34(1)	SCD2	B1	68Ω	AR 34 C H
R100(1)	SCD2	B1	68Ω	AR 35 C H
R206(1)	SCD5	B4	68Ω	-CLK MB XFER H
R141(1)	SCD2	D4	68Ω	CLK3 SCD H
R163(1)	SCD5	C4	68Ω	CON CLP PRIVATE INSTR H
R33(1)	SCD3	B3	68Ω	-CON COND EN 30-37 H
R165(1)	SCD4	B7	68Ω	CON COND INSTR ABORT H
R71(1)	SCD5	A4	68Ω	CON COND/AD FLAGS H
R147(1)	SCD2	B5	68Ω	CON COND/FE SHRT H
R138(1)	SCD5	A4	68Ω	CON COND/PCF+# H
R205(1)	SCD5	B4	68Ω	-CON FM XFER H
R123(1)	SCD4	A4	68Ω	CON NICOND TRAP EN H
R215(1)	SCD3	B2	68Ω	-CON PC+1 INH H

RESISTOR LOC(PIN)	SHOWN ON DRW#	REF	VALUE	TERMINATES SIGNAL
R70(1)	SCD5	A4	68Ω	-CON PI CYCLE A H
R124(1)	SCD4	A4	68Ω	CON TRAP EN A H
R140(1)	SCD1	B6	68Ω	CRAM # 00 H
R227(1)	SCD1	B5	68Ω	CRAM # 01 H
R73(1)	SCD1	B5	68Ω	CRAM # 02 H
R80(1)	SCD1	B4	68Ω	CRAM # 03 H
R98(1)	SCD1	B4	68Ω	CRAM # 04 H
R46(1)	SCD1	B3	68Ω	CRAM # 05 H
R139(1)	SCD1	B3	68Ω	CRAM # 06 H
R168(1)	SCD1	B1	68Ω	CRAM # 07 H
R99(1)	SCD1	B1	68Ω	CRAM # 08 H
R32(1)	SCD3	B3	68Ω	CRAM COND 03 A H
R30(1)	SCD3	B3	68Ω	CRAM COND 04 A H
R35(1)	SCD3	B3	68Ω	CRAM COND 05 A H
R146(1)	SCD2	B5	68Ω	CRAM FE LOAD H
R108(1)	SCD1	C8	68Ω	CRAM SCAD 1 H
R110(1)	SCD1	D8	68Ω	CRAM SCAD 2 H
R55(1)	SCD1	D8	68Ω	CRAM SCAD 4 H
R39(1)	SCD1	A1	68Ω	-CRAM SCADA EN H
R49(1)	SCD1	A1	68Ω	CRAM SCADA SEL 1 H
R44(1)	SCD1	A1	68Ω	CRAM SCADA SEL 2 H
R41(1)	SCD1	B1	68Ω	CRAM SCADB SEL 1 H
R43(1)	SCD1	B1	68Ω	CRAM SCADB SEL 2 H
R102(1)	SCD2	A7	68Ω	CRAM SCM SEL 2 H
R93(1)	SCD3	A7	68Ω	CRAM SH-ARMM SEL 1 H
R95(1)	SCD3	A7	68Ω	CRAM SH-ARMM SEL 2 H
R211(1)	SCD3	B2	68Ω	CRAM VMA SEL 2 A H
R208(1)	SCD4	B7	68Ω	CTL DISP/NICOND H
R175(1)	SCD5	B2	68Ω	-CTL SPEC/SAVE FLAGS H
R88(1)	SCD5	A4	68Ω	CTL1 COND/AR+EXP H
R4(1)	SCD4	B3	68Ω	CTL1 SPEC/CLR FPD H
R135(1)	SCD5	A7	68Ω	CTL1 SPEC/FLAG CTL H
R101(1)	SCD2	A7	68Ω	CTL1 SPEC/SCM ALT H
R207(1)	SCD5	A2	68Ω	-MCL6 PAGED FETCH H
R218(1)	SCD3	B5	68Ω	-PI2 PI1 A H
R219(1)	SCD3	B6	68Ω	-PI2 PI2 A H
R222(1)	SCD3	B7	68Ω	-PI2 PI4 A H
R209(1)	SCD5	B2	68Ω	PT PUBLIC H
R28(1)	SCD1	C6	68Ω	SCD1 SCAD 00 H
R29(1)	SCD1	C6	68Ω	SCD1 SCAD 01 H

RESISTOR LOC(PIN)	SHOWN ON DRW#	REF	VALUE	TERMINATES SIGNAL
R226(1)	SCD1	C4	68Ω	SCD1 SCAD 02 H
R172(1)	SCD1	C4	68Ω	SCD1 SCAD 03 H
R225(1)	SCD1	C4	68Ω	SCD1 SCAD 04 H
R223(1)	SCD1	C4	68Ω	SCD1 SCAD 05 H
R179(1)	SCD1	C3	68Ω	SCD1 SCAD 06 H
R96(1)	SCD1	C3	68Ω	SCD1 SCAD 07 H
R97(1)	SCD1	C3	68Ω	SCD1 SCAD 08 H
R94(1)	SCD1	C3	68Ω	SCD1 SCAD 09 H
R56(1)	SCD1	D7	68Ω	-SCD1 SCAD 2 H
R237(1)	SCD1	D7	68Ω	-SCD1 SCAD 4 H
R244(1)	SCD1	C4	68Ω	SCD1 SCAD CRY 02 OUT H
R64(1)	SCD1	C3	68Ω	SCD1 SCAD CRY 06 OUT H
R57(1)	SCD1	C7	68Ω	SCD1 SCAD CRY IN H
R109(1)	SCD1	C7	68Ω	SCD1 SCAD S0 H
R107(1)	SCD1	C7	68Ω	SCD1 SCAD S1 H
R239(1)	SCD1	A6	68Ω	SCD1 SCADA 00 H
R243(1)	SCD1	A6	68Ω	SCD1 SCADA 01 H
R67(1)	SCD1	A5	68Ω	SCD1 SCADA 02 H
R68(1)	SCD1	A5	68Ω	SCD1 SCADA 03 H
R69(1)	SCD1	A4	68Ω	SCD1 SCADA 04 H
R63(1)	SCD1	A4	68Ω	SCD1 SCADA 05 H
R53(1)	SCD1	A3	68Ω	SCD1 SCADA 06 H
R111(1)	SCD1	A3	68Ω	SCD1 SCADA 07 H
R106(1)	SCD1	A1	68Ω	SCD1 SCADA 08 H
R51(1)	SCD1	A1	68Ω	SCD1 SCADA 09 H
R59(1)	SCD1	C1	68Ω	SCD1 SCADA EXP 02 H
R58(1)	SCD1	C1	68Ω	SCD1 SCADA EXP 03 H
R121(1)	SCD1	C1	68Ω	SCD1 SCADA EXP 04 H
R119(1)	SCD1	C1	68Ω	SCD1 SCADA EXP 05 H
R47(1)	SCD1	C1	68Ω	SCD1 SCADA EXP 06 H
R45(1)	SCD1	C1	68Ω	SCD1 SCADA EXP 07 H
R38(1)	SCD1	C1	68Ω	SCD1 SCADA EXP 08 H
R37(1)	SCD1	C1	68Ω	SCD1 SCADA EXP 09 H
R240(1)	SCD1	B6	68Ω	SCD1 SCADB 00 H
R241(1)	SCD1	B6	68Ω	SCD1 SCADB 01 H
R66(1)	SCD1	B5	68Ω	SCD1 SCADB 02 H
R118(1)	SCD1	B5	68Ω	SCD1 SCADB 03 H
R65(1)	SCD1	B4	68Ω	SCD1 SCADB 04 H
R62(1)	SCD1	B4	68Ω	SCD1 SCADB 05 H
R52(1)	SCD1	B3	68Ω	SCD1 SCADB 06 H

NOTE:

1. ALL TERMINATORS HAVE PIN TWO CONNECTED TO -2.0V AND ARE 5% 1/4WATT UNLESS OTHERWISE SPECIFIED
2. ENTRIES ARE SORTED BY SIGNAL NAME
3. % INDICATES OUTPUT OF DIP LOC AND
   ( ) INDICATES PIN NUMBER

"THIS DRAWING AND SPECIFICATIONS, HEREIN, ARE THE PROPERTY OF DIGITAL EQUIPMENT CORPORATION AND SHALL NOT BE REPRODUCED OR COPIED OR USED IN WHOLE OR IN PART AS THE BASIS FOR THE MANUFACTURE OR SALE OF ITEMS WITHOUT WRITTEN PERMISSION.
"COPYRIGHT © 1976, DIGITAL EQUIPMENT CORPORATION"

REVISIONS		
CHK	CHANGE NO.	REV
	M8524-00004	C

DRN. C Smith DATE 17-DEC-76
CHK Tom Eggers DATE 21 Dec 76
ENG Tom Eggers DATE 21 Dec 76
BOARD LOCATION:
SHEET 1 OF 2
M8524.RVC[4,120] 17-DEC-76 20:47
NEXT HIGHER ASSEMBLY: B-DD-M8524-0
FIRST USED ON OPTION/MODEL: KL10

TITLE: SCAD, PC FLAGS TERMINATORS

SIZE	CODE	NUMBER	REV.
D	CS	M8524-0-RES	C

144

RESISTOR LOC(PIN)	SHOWN ON DRW#	REF	VALUE	TERMINATES SIGNAL
R50(1)	SCD1	B3	68Ω	SCD1 SCADB 07 H
R105(1)	SCD1	B1	68Ω	SCD1 SCADB 08 H
R104(1)	SCD1	B1	68Ω	SCD1 SCADB 09 H
R160(1)	SCD1	D6	68Ω	SCD1 T AS1
R245(1)	SCD1	D6	68Ω	SCD1 T FR1\#400\
R103(1)	SCD2	D3	68Ω	SCD2 CLK B H
R108(1)	SCD2	D3	68Ω	SCD2 CLK C H
R159(1)	SCD2	D3	68Ω	SCD2 CLK D H
R129(1)	SCD2	D3	68Ω	SCD2 CLK F H
R242(1)	SCD2	C4	68Ω	SCD2 FE 00 H
R229(1)	SCD2	C4	68Ω	SCD2 FE 01 H
R61(1)	SCD2	C3	68Ω	SCD2 FE 02 H
R60(1)	SCD2	C3	68Ω	SCD2 FE 03 H
R177(1)	SCD2	C3	68Ω	SCD2 FE 04 H
R120(1)	SCD2	C3	68Ω	SCD2 FE 05 H
R228(1)	SCD2	C1	68Ω	SCD2 FE 06 H
R48(1)	SCD2	C1	68Ω	SCD2 FE 07 H
R176(1)	SCD2	C1	68Ω	SCD2 FE 08 H
R181(1)	SCD2	C1	68Ω	SCD2 FE 09 H
R153(1)	SCD2	C7	68Ω	SCD2 SC 00 H
R152(1)	SCD2	C7	68Ω	SCD2 SC 01 H
R231(1)	SCD2	C7	68Ω	SCD2 SC 02 H
R154(1)	SCD2	C7	68Ω	SCD2 SC 03 H
R186(1)	SCD2	B6	68Ω	SCD2 SCM 00 H
R190(1)	SCD2	B6	68Ω	SCD2 SCM 01 H
R189(1)	SCD2	B5	68Ω	SCD2 SCM 02 H
R185(1)	SCD2	B5	68Ω	SCD2 SCM 03 H
R114(1)	SCD2	B4	68Ω	SCD2 SCM 04 H
R112(1)	SCD2	B4	68Ω	SCD2 SCM 05 H
R115(1)	SCD2	B3	68Ω	SCD2 SCM 06 H
R116(1)	SCD2	B3	68Ω	SCD2 SCM 07 H
R113(1)	SCD2	B1	68Ω	SCD2 SCM 08 H
R117(1)	SCD2	B1	68Ω	SCD2 SCM 09 H
R92(1)	SCD3	A7	68Ω	SCD3 AR 00 H
R233(1)	SCD3	C7	68Ω	SCD3 DIAG 04 H
R213(1)	SCD3	C7	68Ω	-SCD3 DIAG 04 H
R232(1)	SCD3	C7	68Ω	SCD3 DIAG 05 H
R212(1)	SCD3	C7	68Ω	-SCD3 DIAG 05 H
R234(1)	SCD3	C7	68Ω	SCD3 DIAG 06 H
R210(1)	SCD3	C7	68Ω	-SCD3 DIAG 06 H

RESISTOR LOC(PIN)	SHOWN ON DRW#	REF	VALUE	TERMINATES SIGNAL
R230(1)	SCD3	C7	68Ω	-SCD3 DIAG EN H
R76(1)	SCD4	B3	68Ω	-SCD4 CLR FPD H
R7(1)	SCD4	A1	68Ω	SCD4 LOAD PCP H
R127(1)	SCD4	D6	68Ω	SCD4 OV H
R5(1)	SCD4	B7	68Ω	-SCD4 TRAP CLEAR H
R221(1)	SCD4	C4	68Ω	SCD4 TRAP CYC 1 H
R220(1)	SCD4	C3	68Ω	SCD4 TRAP CYC 1 OR 2 H
R36(1)	SCD4	C6	68Ω	SCD4 TRAP CYC 2 H
R74(1)	SCD4	B4	68Ω	SCD4 TRAP REQ 1 EN H
R85(1)	SCD4	B7	68Ω	SCD4 TRAP REQ 2 EN H
R164(1)	SCD5	D1	68Ω	SCD5 ADR BRK CYC H
R125(1)	SCD5	B7	68Ω	-SCD5 AR 05 H
R197(1)	SCD5	A7	68Ω	SCD5 AR 06 H
R246(1)	SCD5	A7	68Ω	-SCD5 AR 06 H
R194(1)	SCD5	A7	68Ω	-SCD5 AR 07 H
P199(1)	SCD5	C6	68Ω	SCD5 CLR PUBLIC H
R91(1)	SCD5	A7	68Ω	SCD5 DISP/FLAG CTL H
R171(1)	SCD5	A7	68Ω	-SCD5 DISP/FLAG CTL H
R3(1)	SCD5	B1	68Ω	SCD5 DISP/SAVE FLAGS H
R137(1)	SCD5	A3	68Ω	SCD5 EXP TEST H
R203(1)	SCD5	A1	68Ω	SCD5 INSTR FETCH H
R192(1)	SCD5	A1	68Ω	-SCD5 INSTR FETCH H
R2(1)	SCD5	B6	68Ω	SCD5 JFCL H
R167(1)	SCD5	B1	68Ω	-SCD5 KERNEL MODE H
R198(1)	SCD5	B7	68Ω	SCD5 LEAVE USER H
P157(1)	SCD5	B7	68Ω	-SCD5 LEAVE USER H
R183(1)	SCD5	A5	68Ω	SCD5 LOAD FLAGS H
R1(1)	SCD5	A5	68Ω	-SCD5 LOAD FLAGS H
P166(1)	SCD5	A5	68Ω	SCD5 LOAD FLAGS A H
R193(1)	SCD5	A5	68Ω	-SCD5 LOAD FLAGS A H
R72(1)	SCD5	A3	68Ω	SCD5 PCF+# H
R182(1)	SCD5	B1	68Ω	SCD5 PI&SAVE FLAGS H
R155(1)	SCD5	B1	68Ω	-SCD5 PI&SAVE FLAGS H
R162(1)	SCD5	C3	68Ω	-SCD5 PRIVATE INSTR EN H
R156(1)	SCD5	D5	68Ω	-SCD5 PUBLIC H
R126(1)	SCD5	C5	68Ω	-SCD5 PUBLIC EN H
R161(1)	SCD5	B1	68Ω	SCD5 PUBLIC PAGE H
R191(1)	SCD5	B1	68Ω	-SCD5 PUBLIC PAGE H
P236(1)	SCD5	A1	68Ω	SCD5 RESET H
R170(1)	SCD5	A1	68Ω	-SCD5 RESET H

RESISTOR LOC(PIN)	SHOWN ON DRW#	REF	VALUE	TERMINATES SIGNAL
R14(1)	SCD5	A3	68Ω	-SCD5 SET AD FLAGS H
R122(1)	SCD5	A6	68Ω	-SCD5 SPEC/PORTAL H
R131(1)	SCD5	D7	68Ω	-SCD5 USER H
R196(1)	SCD5	D7	68Ω	-SCD5 USER EN H
R128(1)	SCD5	D6	68Ω	-SCD5 USER IOT H
R202(1)	SCD5	C6	68Ω	-SCD5 USER IOT EN H
R180(1)	SCD2	D6	68Ω	[A,SCD2 SC 36 TO 63 H,NC]

NOTE:

1. ALL TERMINATORS HAVE PIN TWO CONNECTED TO -2.0V AND ARE 5% 1/4WATT UNLESS OTHERWISE SPECIFIED
2. ENTRIES ARE SORTED BY SIGNAL NAME
3. % INDICATES OUTPUT OF DIP LOC AND ( ) INDICATES PIN NUMBER

"THIS DRAWING AND SPECIFICATIONS, HEREIN, ARE THE PROPERTY OF DIGITAL EQUIPMENT CORPORATION AND SHALL NOT BE REPRODUCED OR COPIED OR USED IN WHOLE OR IN PART AS A BASIS FOR THE MANUFACTURE OR SALE OF ITEMS WITHOUT WRITTEN PERMISSION.
COPYRIGHT © 1976, DIGITAL EQUIPMENT CORPORATION"

REVISIONS		
CHK	CHANGE NO.	REV

digital

DRN. C Smith DATE 17-DEC-76 ENG. Tom Eggen DATE 21Dec76
CHK'D Tom Eggen DATE 21Dec76 BOARD LOCATION: SHEET 2 OF 2
M8524Z.RVC[4,120] 17-DEC-76 20:48 NEXT HIGHER ASSEMBLY:
FIPST USED ON OPTION/MODEL: KL10 B-DD-M8524-0

TITLE: SCAD, PC FLAGS TERMINATORS

SIZE	CODE	NUMBER	REV.
D	CS	M8524-0-RES	C

MR

145

REVISION CONTROL SHEET

CUSTOMER PRINT SET	MFG SET	DRAWING NO	NO OF SHT	DESCRIPTION	OPTION NO/FILE DATE	REVISIONS					
				MODULE REVISION		A	B	C	D	E	E
		D-UA-M8525-Ø-Ø	7	EBOX CONTROL #2		-	A	B	C	D	DI
		D-CS-M8525-Ø-CON1	1	EBOX CONTROL #2 CRAM COND FIELD		-	A	B	B	C	CI
		D-CS-M8525-Ø-CON2	1	EBOX CONTROL #2 CONSOLE CONTROL		-	A	B	B	C	CI
		D-CS-M8525-Ø-CON3	1	EBOX CONTROL #2 INTERNAL I/O		-	A	A	A	B	BI
		D-CS-M8525-Ø-CON4	1	EBOX CONTROL #2 PARITY LOGIC		-	A	B	C	D	DI
		D-CS-M8525-Ø-CON5	1	EBOX CONTROL #2 XFER, FM WRITE		-	A	A	A	B	BI
		D-CS-M8525-Ø-CON6	1	EBOX CONTROL #2 POWER, GND CAPS		-	A	A	A	A	AI
		D-CS-M8525-Ø-RES	2	EBOX CONTROL #2 TERMINATORS		-	A	B	B	C	CI
		K-CO-M8525-Ø-4	1	EBOX CONTROL #2 (CALDEC DATA BASE)		B	B	B	B	E	B
		D-AH-M8525-Ø-5	4	EBOX CONTROL #2		A	B	B	B	B	B
		B-MH-M8525-Ø-6	1	MODULE ECO HISTORY		REF	-	-	-	-	-
		5010689	-	ETCH CIRCUIT BOARD		B	B	B	B	B	B
		P00-M8525-ØØ		PROCESS SHEET (REF ONLY)		-	-	-	-	-	-
					ECO NO	ORIG	00001	00002	00003	00004	00005

CUSTOMER PRINT SET CODES
X = PRINT OF DOCUMENT INCLUDED IN PRINT SET
C = INCLUDES ALL PRINTS INDICATED ON DOCUMENT
S = CONFIDENTIAL AUTHORIZED SIGNATURE REQUIRED

TITLE	SHEET	SIZE	CODE	NUMBER	REV
EBOX CONTROL #2	SHEET 2 OF 3	B	DD	M8525-Ø	F

MR

146

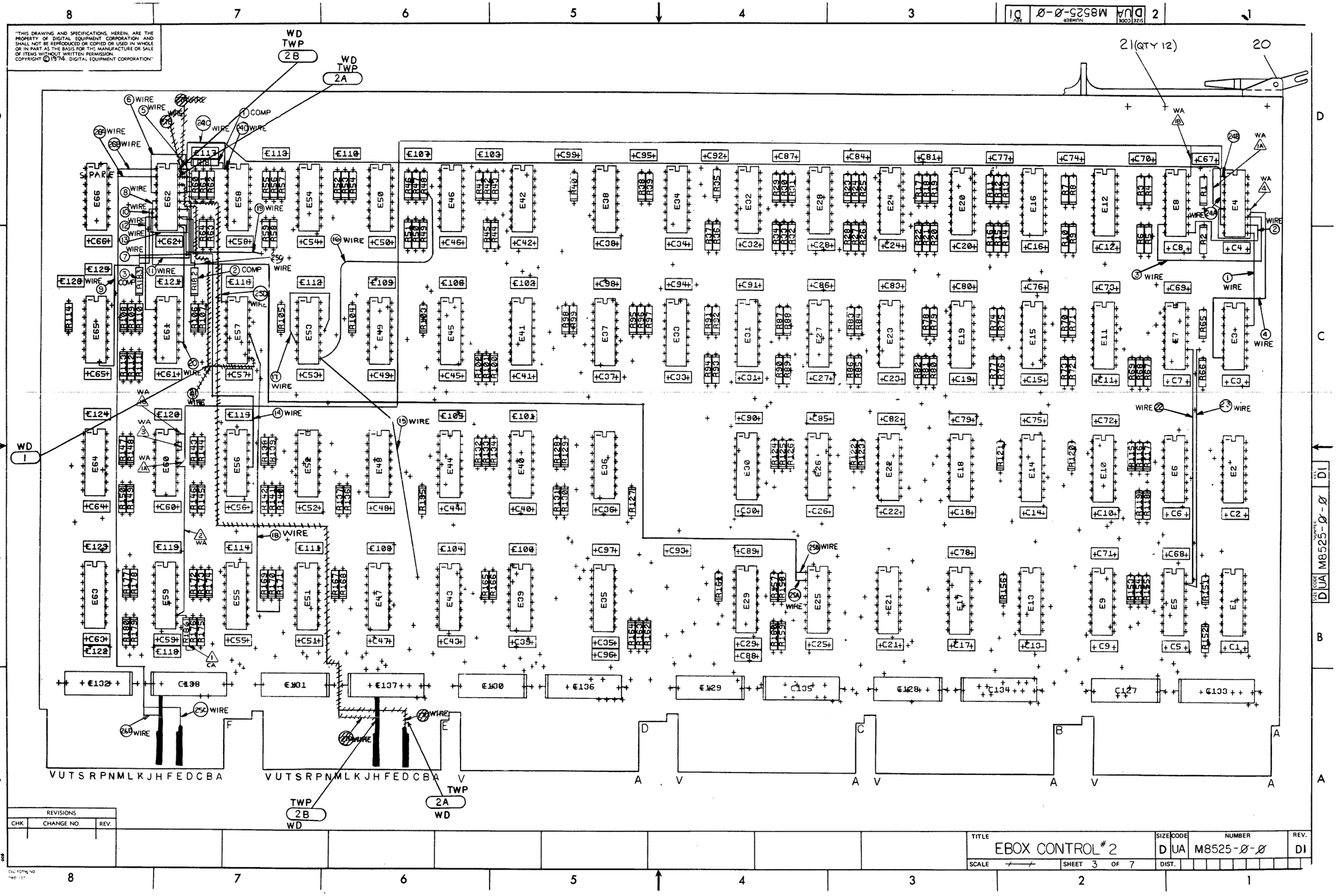
"THIS DRAWING AND SPECIFICATIONS, HEREIN, ARE THE PROPERTY OF DIGITAL EQUIPMENT CORPORATION AND SHALL NOT BE REPRODUCED OR COPIED OR USED IN WHOLE OR IN PART AS THE BASIS FOR THE MANUFACTURE OR SALE OF ITEMS WITHOUT WRITTEN PERMISSION.
COPYRIGHT © 1974, DIGITAL EQUIPMENT CORPORATION"
WD TWP 2B
WD TWP 2A
21(QTY 12)
20
WD 1
TWP 2B WD
TWP 2A WD
VUTSRPNMLKJHFEDCBA
REVISIONS
CHK
CHANGE NO.
REV.
TITLE
EBOX CONTROL # 2
SIZE D
CODE UA
NUMBER M8525-0-0
REV. D1
SCALE
SHEET 3 OF 7
DIST.

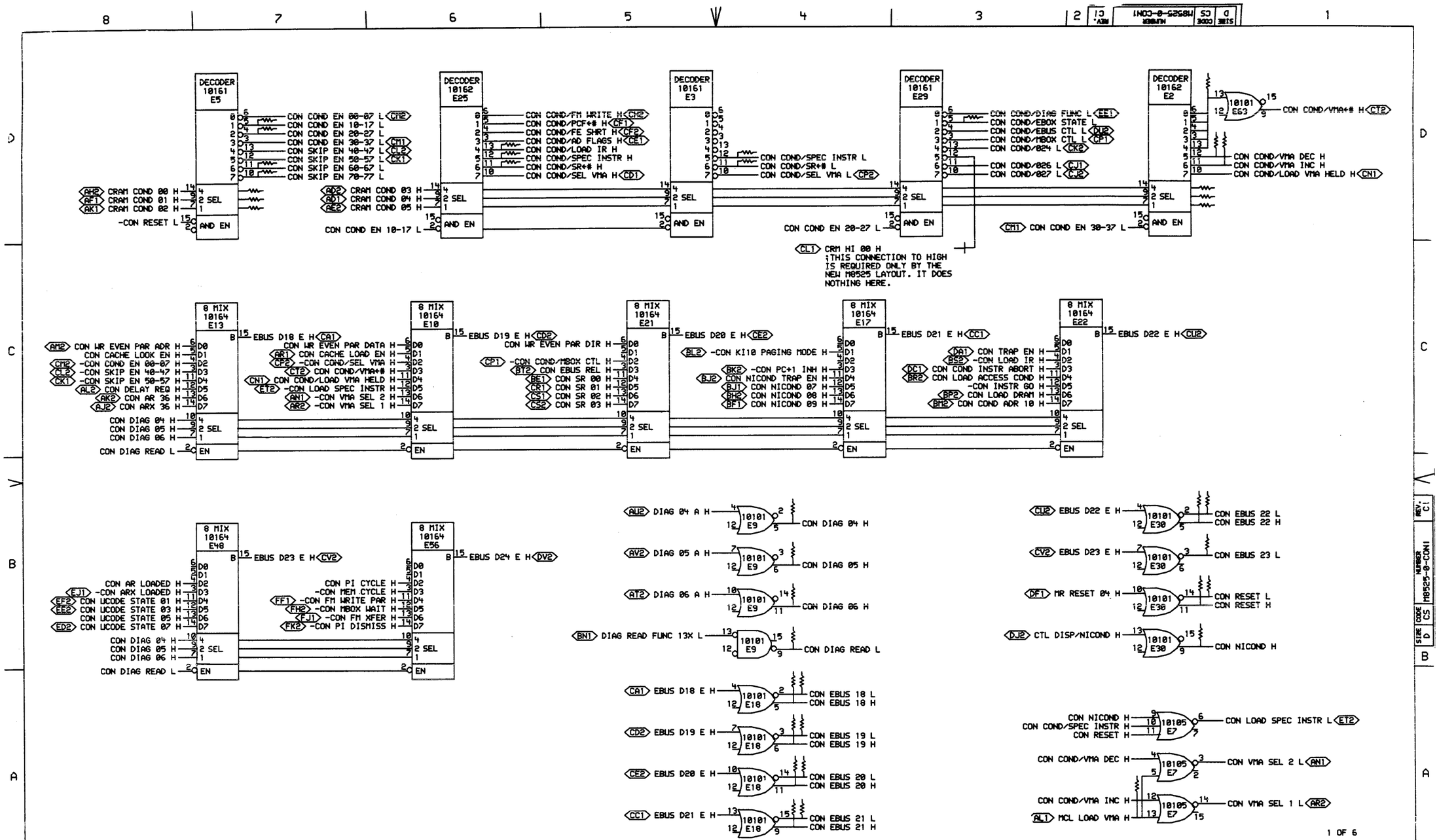

"THIS DRAWING AND SPECIFICATIONS, HEREIN, ARE THE PROPERTY OF DIGITAL EQUIPMENT CORPORATION AND SHALL NOT BE REPRODUCED OR COPIED OR USED IN WHOLE OR IN PART AS THE BASIS FOR THE MANUFACTURE OR SALE OF ITEMS WITHOUT WRITTEN PERMISSION.
COPYRIGHT © 1976, DIGITAL EQUIPMENT CORPORATION"

REVISIONS		
CHK	CHANGE NO.	REV
—	M8525-00006	C

M8525-00005	C1	
	5-10-76	
T. EGGERS		
	7-16-76	

digital

DRN. K. Loomis DATE 23-JUN-76 ENG. T. Eggers DATE 23 June 76
CHK. B. Smith DATE 23-JUN-76 BOARD LOCATION: 4AF35
SHEET 1 OF 1
CONTEX.DRW[4,120] 21-JUN-76 19:47 NEXT HIGHER ASSEMBLY: B-DD-M8525-0
FIRST USED ON OPTION/MODEL: KL10

TITLE: EBOX CONTROL #2 CRAM COND FIELD

SIZE	CODE	NUMBER	REV.
D	CS	M8525-0-CON1	C1

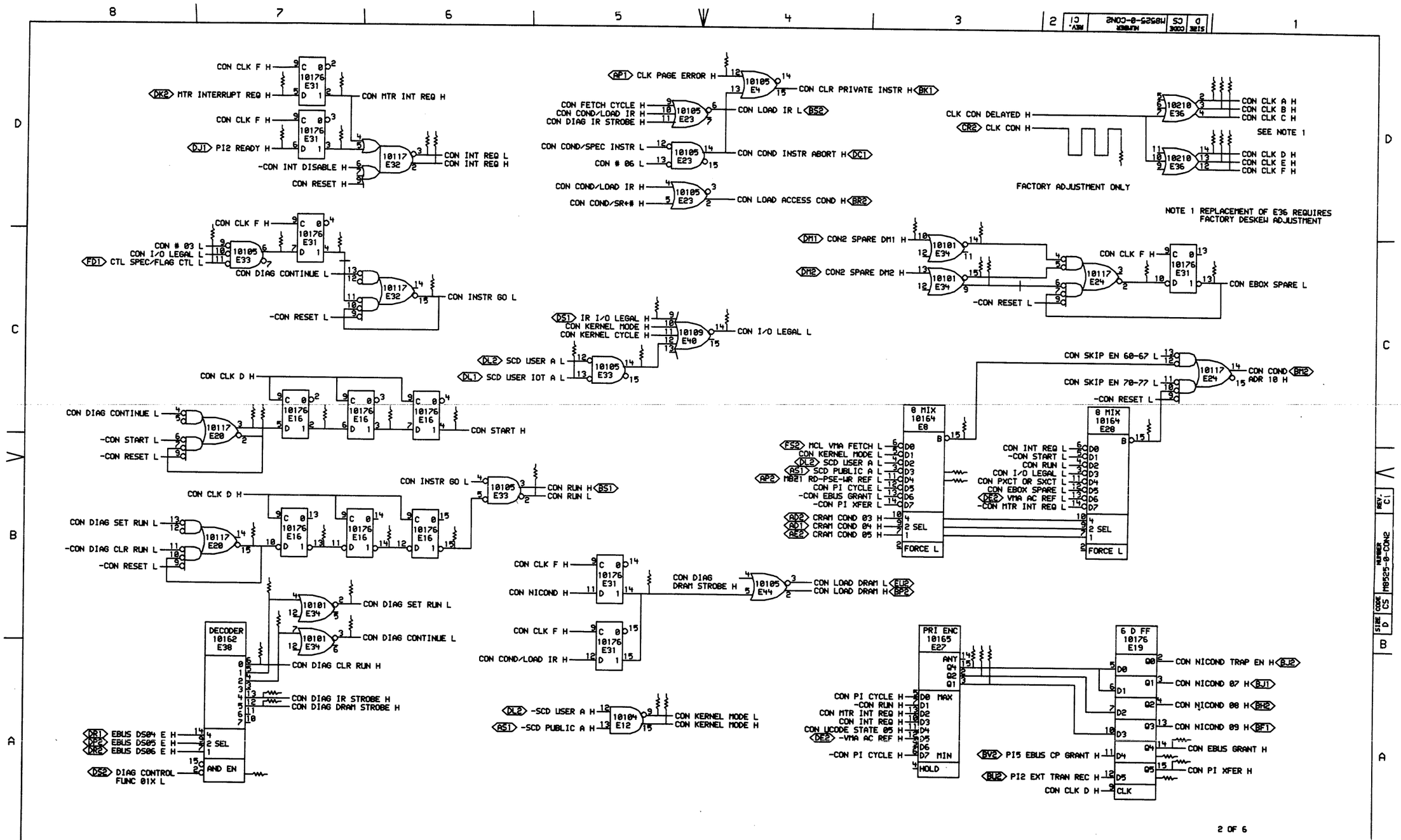

"THIS DRAWING AND SPECIFICATIONS, HEREIN, ARE THE PROPERTY OF DIGITAL EQUIPMENT CORPORATION AND SHALL NOT BE REPRODUCED OR COPIED OR USED IN WHOLE OR IN PART AS THE BASIS FOR THE MANUFACTURE OR SALE OF ITEMS WITHOUT WRITTEN PERMISSION. COPYRIGHT © 1976, DIGITAL EQUIPMENT CORPORATION"

REVISIONS		
CHK	CHANGE NO.	REV
—	M8525-00004	C
	M8525-00005	C1

digital

CONREX.DRW[4,120] 23-MAY-76 12:03

FIRST USED ON OPTION/MODEL: KL10

DRN. DATE 23-JUN-76 ENG. DATE 23 June 76 CHK. DATE 23-JUL-76

BOARD LOCATION: 4A F35 SHEET 1 OF 1

NEXT HIGHER ASSEMBLY: B-DD-M8525-0

TITLE: EBOX CONTROL #2 CONSOLE CONTROL

SIZE	CODE	NUMBER	REV.
D	CS	M8525-0-CON2	C1

149

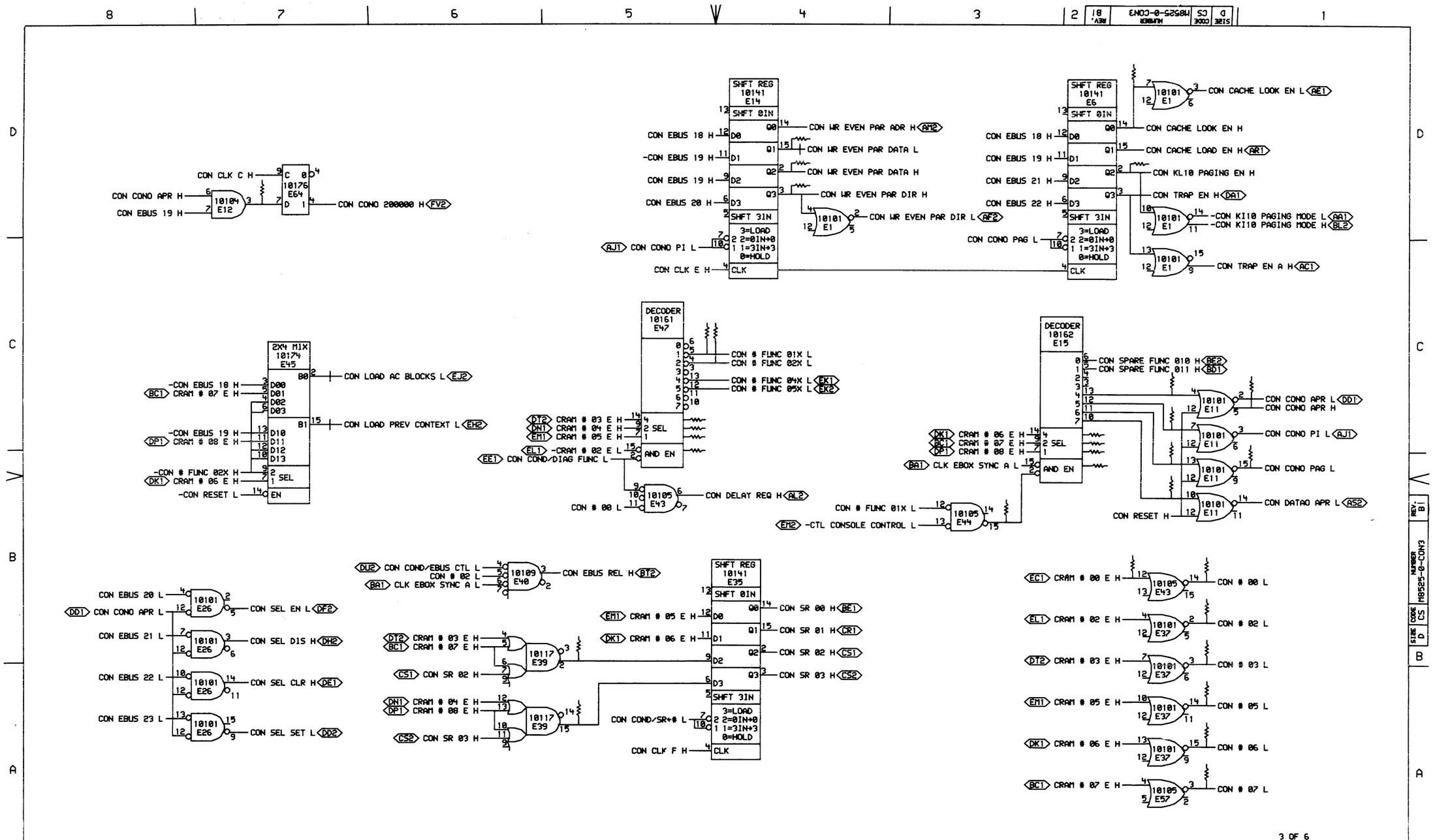

"THIS DRAWING AND SPECIFICATIONS, HEREIN, ARE THE PROPERTY OF DIGITAL EQUIPMENT CORPORATION AND SHALL NOT BE REPRODUCED OR COPIED OR USED IN WHOLE OR IN PART AS THE BASIS FOR THE MANUFACTURE OR SALE OF ITEMS WITHOUT WRITTEN PERMISSION.
COPYRIGHT © 1976, DIGITAL EQUIPMENT CORPORATION"

REVISIONS		
CHK	CHANGE NO.	REV
		B

DRN.	DATE 23-JUN-76	ENG. DATE 23-JUN-76
CHK.	DATE 23-JUN-76	BOARD LOCATION: 4AE35
CON3EX.DRWC4,120]	30-MAY-75 01:48	SHEET 1 OF 1
FIRST USED ON OPTION/MODEL: KL10		NEXT HIGHER ASSEMBLY: B-DD-M8525-0

TITLE: EBOX CONTROL #2 INTERNAL I/O

SIZE	CODE	NUMBER	REV.
D	CS	M8525-0-CON3	B1

150

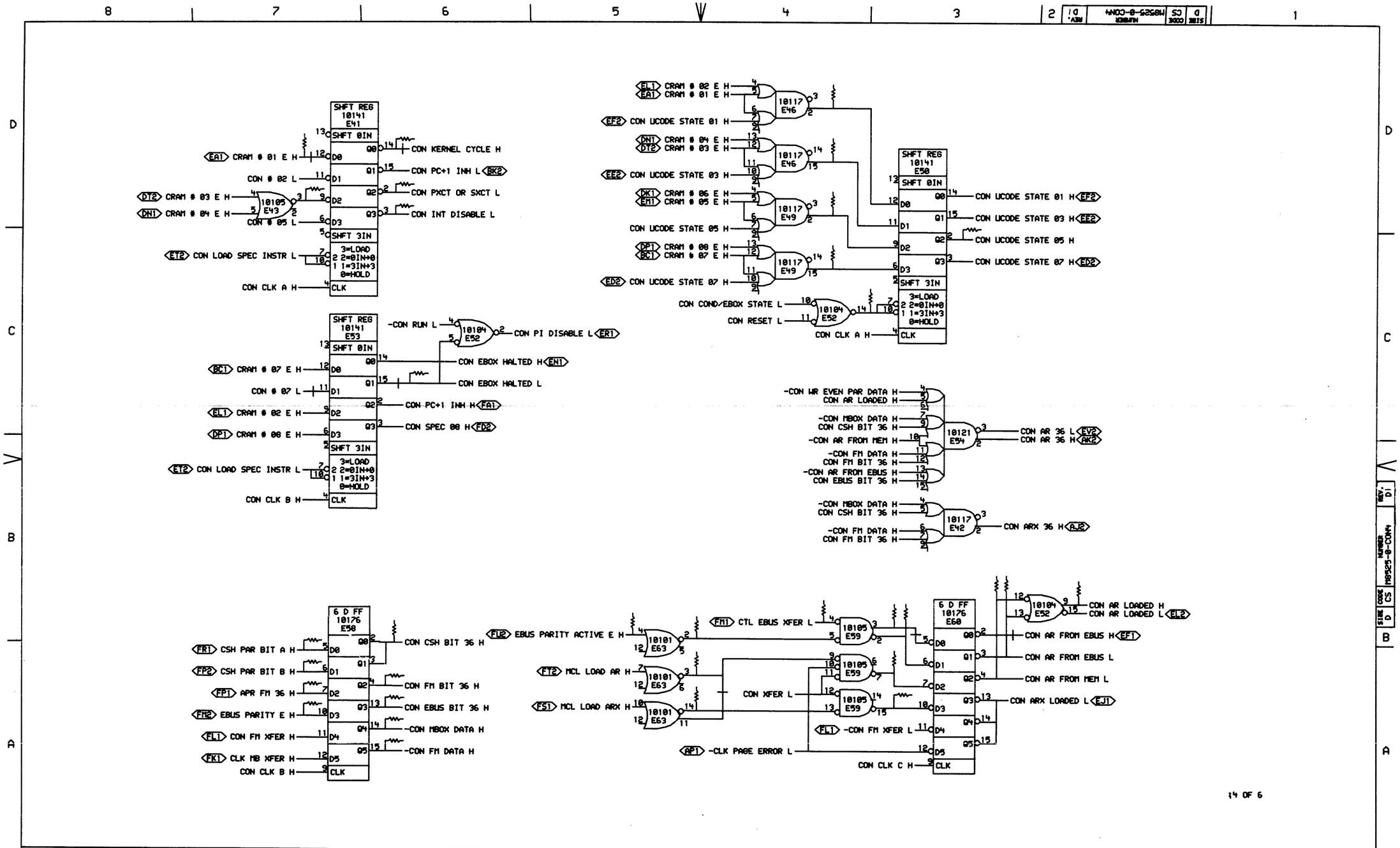

"THIS DRAWING AND SPECIFICATIONS, HEREIN, ARE THE PROPERTY OF DIGITAL EQUIPMENT CORPORATION AND SHALL NOT BE REPRODUCED OR COPIED OR USED IN WHOLE OR IN PART AS THE BASIS FOR THE MANUFACTURE OR SALE OF ITEMS WITHOUT WRITTEN PERMISSION.
COPYRIGHT © 1976, DIGITAL EQUIPMENT CORPORATION"

REVISIONS		
CHK	CHANGE NO.	REV
—	MBS25-00005	D1

digital

CONVERT. DRAW. 4.1201 12:17-AUG-76 12:10:1

DRAN. 19-JUN-76 DATE
CHK'D DATE
ENG. DATE 23-JUN-76
BOARD LOCATION: 4 OF 35
SHEET 1 OF 1
NEXT HIGHER ASSEMBLY:
FIRST USED ON OPTION/MODEL: KL10
B-DD-M8525-0

TITLE: EBOX CONTROL #2 PARITY LOGIC

SIZE	CODE	NUMBER	REV.
D	CS	M8525-0-CON4	D1

151

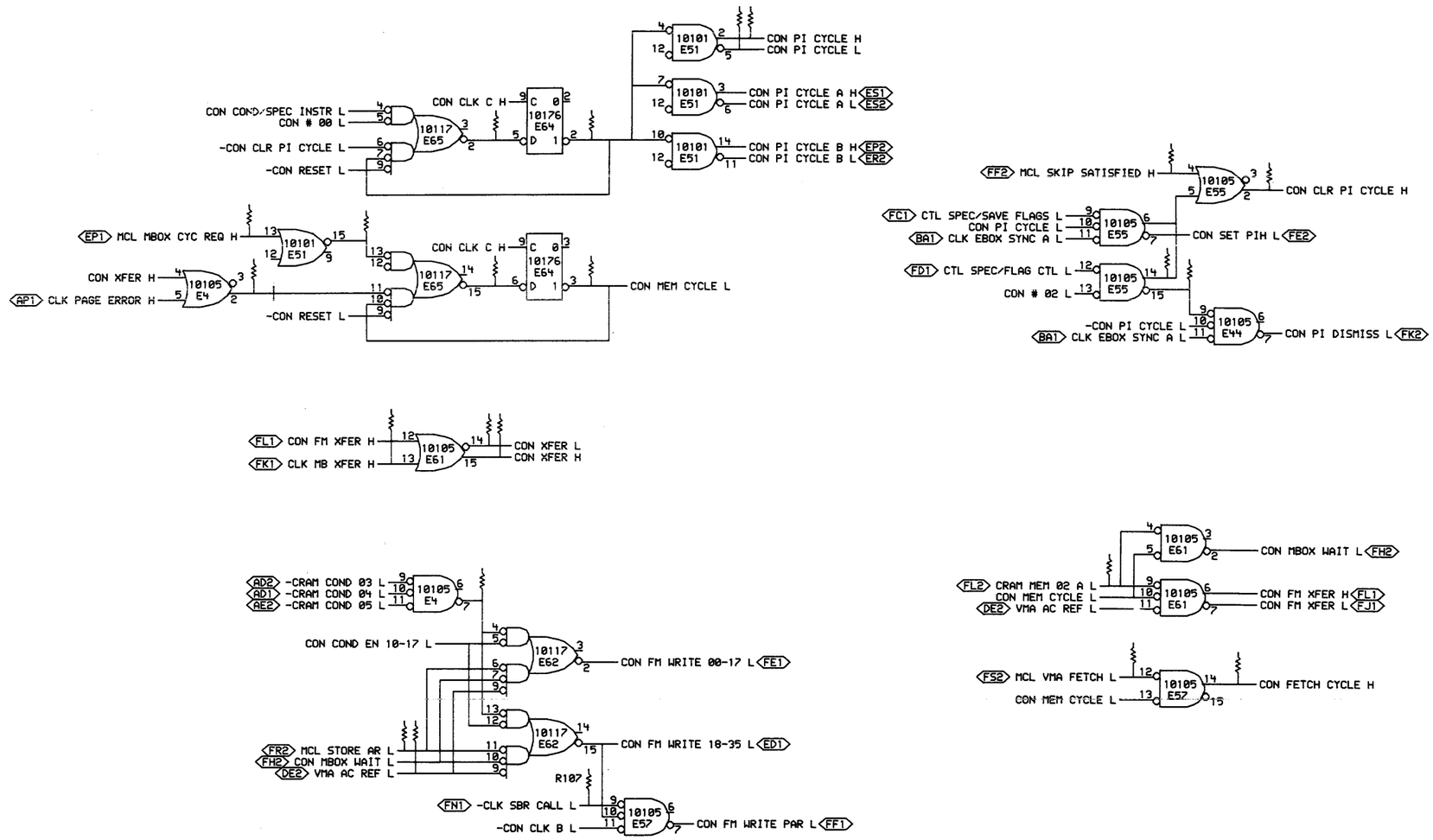

5 OF 6

"THIS DRAWING AND SPECIFICATIONS, HEREIN, ARE THE PROPERTY OF DIGITAL EQUIPMENT CORPORATION AND SHALL NOT BE REPRODUCED OR COPIED OR USED IN WHOLE OR IN PART AS THE BASIS FOR THE MANUFACTURE OR SALE OF ITEMS WITHOUT WRITTEN PERMISSION. COPYRIGHT © 1976, DIGITAL EQUIPMENT CORPORATION"

REVISIONS		
CHK	CHANGE NO.	REV

digital

DRN.	DATE 23-JUN-76	ENG	DATE 23 June 76
CHK'D	DATE 23-JUN-76	BOARD LOCATION: 4AE35	
CON5EX.DRW[4,120] 21-JUN-76 20:30		SHEET 1 OF 1	
FIRST USED ON OPTION/MODEL: KL10		NEXT HIGHER ASSEMBLY: B-DD-M8525-0	

TITLE: EBOX CONTROL #2 XFER, FM WRITE

SIZE	CODE	NUMBER	REV.
D	CS	M8525-0-CON5	B1

152

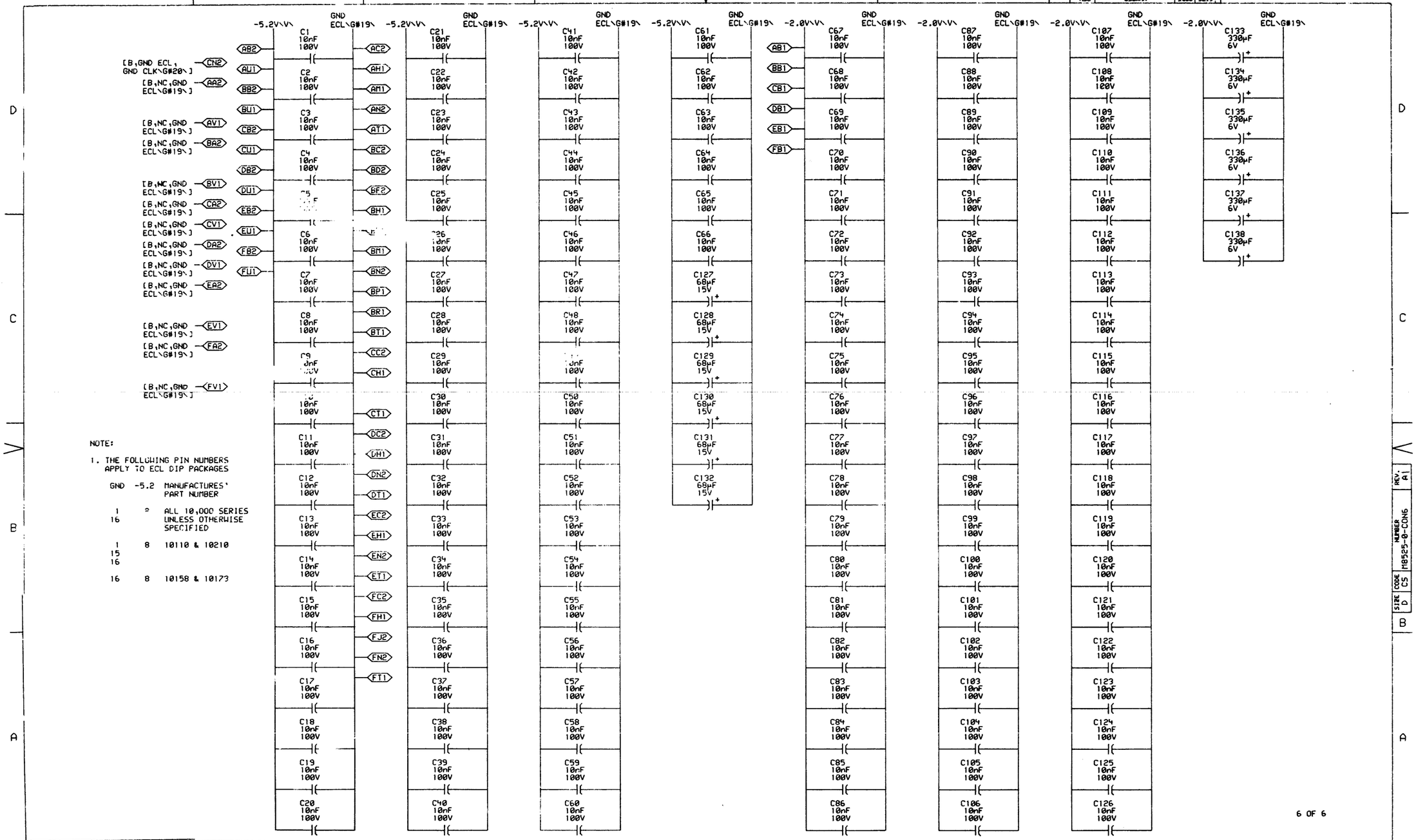

NOTE:

1. THE FOLLOWING PIN NUMBERS APPLY TO ECL DIP PACKAGES

GND	-5.2	MANUFACTURES' PART NUMBER
1 16	8	ALL 10,000 SERIES UNLESS OTHERWISE SPECIFIED
1 15 16	8	10110 & 10210
16	8	10158 & 10173

6 OF 6

"THIS DRAWING AND SPECIFICATIONS, HEREIN, ARE THE PROPERTY OF DIGITAL EQUIPMENT CORPORATION AND SHALL NOT BE REPRODUCED OR COPIED OR USED IN WHOLE OR IN PART AS THE BASIS FOR THE MANUFACTURE OR SALE OF ITEMS WITHOUT WRITTEN PERMISSION.
COPYRIGHT © 1975, DIGITAL EQUIPMENT CORPORATION"

REVISIONS		
CHK	CHANGE NO.	REV
—	M8525-00001	A
—	M8525-00005	A1

R. REID — 6-17-75
B. REED — 9-10-76

digital

DRN. J. Stanley — DATE
CHK. D. Allgeheuer — DATE 4/30/75
ENG. R. Reid — DATE 5/1/75
BOARD LOCATION: 4 OF 35
SHEET 1 OF 1
CONGEX[4,120] 24-APR-75 09:42
NEXT HIGHER ASSEMBLY: B-DD-M8525-0
FIRST USED ON OPTION/MODEL: KL10

TITLE: EBOX CONTROL #2 POWER, GND, CAPS

SIZE	CODE	NUMBER	REV.
D	CS	M8525-0-CON6	A1

153

RESISTOR LOC(PIN)	SHOWN DRW#	ON REF	VALUE	TERMINATES SIGNAL
R150(1)	CON3	D7	68Ω	%E12(3)
R73(1)	CON3	B2	68Ω	%E15(10)
R71(1)	CON3	B2	68Ω	%E15(11)
R72(1)	CON3	C2	68Ω	%E15(12)
R70(1)	CON3	C2	68Ω	%E15(13)
R8(1)	CON2	B7	68Ω	%E16(13)
R7(1)	CON2	B6	68Ω	%E16(14)
R97(1)	CON2	B6	68Ω	%E16(15)
R12(1)	CON2	C7	68Ω	%E16(2)
R14(1)	CON2	C6	68Ω	%E16(3)
R177(1)	CON1	D2	68Ω	%E2(3)
R15(1)	CON2	B7	68Ω	%E20(15)
R20(1)	CON2	C7	68Ω	%E20(2)
R13(1)	CON2	C7	68Ω	%E20(3)
R90(1)	CON2	C2	68Ω	%E24(2)
R79(1)	CON2	A3	68Ω	%E27(15)
R80(1)	CON2	A3	68Ω	%E27(2)
R81(1)	CON2	A3	68Ω	%E27(3)
R22(1)	CON2	C2	68Ω	%E28(15)
R133(1)	CON2	B5	68Ω	%E31(14)
R35(1)	CON2	D7	68Ω	%E31(3)
R34(1)	CON2	C7	68Ω	%E31(4)
R128(1)	CON2	C5	68Ω	%E33(14)
R93(1)	CON2	C7	68Ω	%E33(6)
R23(1)	CON2	C3	68Ω	%E34(14)
R25(1)	CON2	C3	68Ω	%E34(15)
R27(1)	CON2	C3	68Ω	%E34(9)
R39(1)	CON2	B7	68Ω	%E38(4)
R38(1)	CON2	B7	68Ω	%E38(5)
R163(1)	CON3	A5	68Ω	%E39(15)
R162(1)	CON3	B5	68Ω	%E39(2)
R111(1)	CON5	C7	68Ω	%E4(2)
R181(1)	CON5	B6	68Ω	%E4(7)
R100(1)	CON4	D7	68Ω	%E43(3)
R76(1)	CON3	B3	68Ω	%E44(15)
R50(1)	CON4	D4	68Ω	%E46(15)
R46(1)	CON4	D4	68Ω	%E46(2)
R54(1)	CON4	C4	68Ω	%E49(15)
R49(1)	CON4	D4	68Ω	%E49(2)
R109(1)	CON5	C6	68Ω	%E51(15)

RESISTOR LOC(PIN)	SHOWN DRW#	ON REF	VALUE	TERMINATES SIGNAL
R51(1)	CON4	C3	68Ω	%E52(14)
R135(1)	CON5	C3	68Ω	%E55(15)
R174(1)	CON5	C3	68Ω	%E55(6)
R146(1)	CON4	A3	68Ω	%E59(15)
R144(1)	CON4	B3	68Ω	%E59(2)
R143(1)	CON4	B3	68Ω	%E59(3)
R145(1)	CON4	A3	68Ω	%E59(7)
R172(1)	CON4	A4	68Ω	%E63(14)
R178(1)	CON4	B4	68Ω	%E63(2)
R175(1)	CON4	A4	68Ω	%E63(3)
R168(1)	CON5	C5	68Ω	%E64(2)
R148(1)	CON5	C6	68Ω	%E65(15)
R147(1)	CON5	C6	68Ω	%E65(2)
R17(1)	CON2	C3	68Ω	%E8(15)
R63(1)	CON4	A7	68Ω	APR FM 36 H
R127(1)	CON2	D2	68Ω	CLK CON H
R170(1)	CON3	B2	68Ω	-CLK EBOX SYNC A H
R61(1)	CON5	B6	68Ω	CLK MB XFER H
R186(1)	CON2	D4	68Ω	CLK PAGE ERROR H
R107(1)	CON5	A5	68Ω	CLK SBR CALL H
R114(1)	CON3	B2	68Ω	-CON # 00 H
R169(1)	CON3	B2	68Ω	-CON # 02 H
R95(1)	CON3	B2	68Ω	-CON # 03 H
R98(1)	CON3	A2	68Ω	-CON # 05 H
R83(1)	CON3	A2	68Ω	-CON # 06 H
R105(1)	CON3	A2	68Ω	-CON # 07 H
R132(1)	CON3	C5	68Ω	-CON # FUNC 01X H
R102(1)	CON3	C5	68Ω	-CON # FUNC 02X H
R58(1)	CON4	B3	68Ω	-CON AR FROM EBUS H
R52(1)	CON4	B3	68Ω	-CON AR FROM MEM H
R57(1)	CON4	B2	68Ω	CON AR LOADED H
R156(1)	CON3	D2	68Ω	CON CACHE LOOK EN H
R53(1)	CON2	D1	68Ω	CON CLK A H
R59(1)	CON2	D1	68Ω	CON CLK B H
R149(1)	CON2	D1	68Ω	CON CLK C H
R16(1)	CON2	D1	68Ω	CON CLK D H
R115(1)	CON2	D1	68Ω	CON CLK E H
R89(1)	CON2	D1	68Ω	CON CLK F H
R112(1)	CON5	C2	68Ω	CON CLR PI CYCLE H
R182(1)	CON1	D7	68Ω	-CON COND EN 10-17 H

RESISTOR LOC(PIN)	SHOWN DRW#	ON REF	VALUE	TERMINATES SIGNAL
R161(1)	CON1	D7	68Ω	-CON COND EN 20-27 H
R137(1)	CON1	D3	68Ω	-CON COND/EBOX STATE H
R87(1)	CON1	D6	68Ω	CON COND/LOAD IR H
R69(1)	CON1	D6	68Ω	CON COND/SPEC INSTR H
R108(1)	CON1	D4	68Ω	-CON COND/SPEC INSTR H
R84(1)	CON1	D6	68Ω	CON COND/SR+# H
R164(1)	CON1	D4	68Ω	-CON COND/SR+# H
R67(1)	CON1	D2	68Ω	CON COND/VMA DEC H
R65(1)	CON1	D2	68Ω	CON COND/VMA INC H
R10(1)	CON3	C1	68Ω	CON COND APR H
R118(1)	CON3	B1	68Ω	-CON COND PAG H
R43(1)	CON4	B6	68Ω	CON CSH BIT 36 H
R142(1)	CON1	B4	68Ω	CON DIAG 04 H
R140(1)	CON1	B4	68Ω	CON DIAG 05 H
R141(1)	CON1	B4	68Ω	CON DIAG 06 H
R19(1)	CON2	A7	68Ω	CON DIAG CLR RUN H
R18(1)	CON2	B6	68Ω	-CON DIAG CONTINUE H
R134(1)	CON2	A7	68Ω	CON DIAG DRAM STROBE H
R82(1)	CON2	A7	68Ω	CON DIAG IR STROBE H
R139(1)	CON1	B4	68Ω	-CON DIAG READ H
R11(1)	CON2	B6	68Ω	-CON DIAG SET RUN H
R188(1)	CON4	C6	68Ω	-CON EBOX HALTED H
R26(1)	CON2	C1	68Ω	-CON EBOX SPARE H
R116(1)	CON1	A4	68Ω	CON EBUS 18 H
R103(1)	CON1	A4	68Ω	-CON EBUS 18 H
R9(1)	CON1	A4	68Ω	CON EBUS 19 H
R101(1)	CON1	A4	68Ω	-CON EBUS 19 H
R121(1)	CON1	A4	68Ω	CON EBUS 20 H
R126(1)	CON1	A4	68Ω	-CON EBUS 20 H
R119(1)	CON1	A4	68Ω	CON EBUS 21 H
R124(1)	CON1	A4	68Ω	-CON EBUS 21 H
R117(1)	CON1	B2	68Ω	CON EBUS 22 H
R122(1)	CON1	B2	68Ω	-CON EBUS 22 H
R125(1)	CON1	B2	68Ω	-CON EBUS 23 H
R55(1)	CON4	A6	68Ω	CON EBUS BIT 36 H
R2(1)	CON2	A2	68Ω	CON EBUS GRANT H
R85(1)	CON5	B2	68Ω	CON FETCH CYCLE H
R44(1)	CON4	A6	68Ω	CON FM BIT 36 H
R42(1)	CON4	A6	68Ω	-CON FM DATA H
R30(1)	CON2	C4	68Ω	-CON I/O LEGAL H

RESISTOR LOC(PIN)	SHOWN DRW#	ON REF	VALUE	TERMINATES SIGNAL
R123(1)	CON2	C6	68Ω	-CON INSTR GO H
R36(1)	CON4	D6	68Ω	-CON INT DISABLE H
R86(1)	CON2	D6	68Ω	CON INT REQ H
R33(1)	CON2	D6	68Ω	-CON INT REQ H
R129(1)	CON4	D6	68Ω	CON KERNEL CYCLE H
R131(1)	CON2	A5	68Ω	CON KERNEL MODE H
R4(1)	CON2	A5	68Ω	-CON KERNEL MODE H
R152(1)	CON3	D2	68Ω	CON KL10 PAGING EN H
R45(1)	CON4	A6	68Ω	-CON MBOX DATA H
R138(1)	CON5	C5	68Ω	-CON MEM CYCLE H
R29(1)	CON2	D7	68Ω	CON MTR INT REQ H
R68(1)	CON1	B2	68Ω	CON NICOND H
R88(1)	CON5	D5	68Ω	CON PI CYCLE H
R5(1)	CON5	D5	68Ω	-CON PI CYCLE H
R1(1)	CON2	A2	68Ω	CON PI XFER H
R28(1)	CON4	D6	68Ω	-CON PXCT OR SXCT H
R113(1)	CON1	B2	68Ω	CON RESET H
R136(1)	CON1	B2	68Ω	-CON RESET H
R32(1)	CON2	B5	68Ω	-CON RUN H
R24(1)	CON1	D7	68Ω	-CON SKIP EN 60-67 H
R21(1)	CON1	D7	68Ω	-CON SKIP EN 70-77 H
R31(1)	CON2	C6	68Ω	CON START H
R187(1)	CON4	C3	68Ω	CON UCODE STATE 05 H
R120(1)	CON3	D4	68Ω	CON WR EVEN PAR DATA H
R56(1)	CON3	D4	68Ω	-CON WR EVEN PAR DATA H
R151(1)	CON3	D4	68Ω	CON WR EVEN PAR DIR H
R185(1)	CON5	B6	68Ω	CON XFER H
R176(1)	CON5	B6	68Ω	-CON XFER H
R37(1)	CON2	C3	68Ω	CON2 SPARE DM1 H
R165(1)	CON3	B2	68Ω	CRAM # 00 E H
R48(1)	CON4	D7	68Ω	CRAM # 01 E H
R99(1)	CON3	B5	68Ω	CRAM # 02 E H
R41(1)	CON3	C5	68Ω	CRAM # 03 E H
R47(1)	CON3	C5	68Ω	CRAM # 04 E H
R104(1)	CON3	C5	68Ω	CRAM # 05 E H
R75(1)	CON3	C2	68Ω	CRAM # 06 E H
R166(1)	CON3	C2	68Ω	CRAM # 07 E H
R77(1)	CON3	B2	68Ω	CRAM # 08 E H
R155(1)	CON1	D7	68Ω	CRAM COND 00 H
R153(1)	CON1	D7	68Ω	CRAM COND 01 H

NOTE:

1. ALL TERMINATORS HAVE PIN TWO CONNECTED TO -2.0V AND ARE 5% 1/4WATT UNLESS OTHERWISE SPECIFIED
2. ENTRIES ARE SORTED BY SIGNAL NAME
3. % INDICATES OUTPUT OF DIP LOC AND
   () INDICATES PIN NUMBER

"THIS DRAWING AND SPECIFICATIONS, HEREIN, ARE THE PROPERTY OF DIGITAL EQUIPMENT CORPORATION AND SHALL NOT BE REPRODUCED OR COPIED OR USED IN WHOLE OR IN PART AS THE BASIS FOR THE MANUFACTURE OR SALE OF ITEMS WITHOUT WRITTEN PERMISSION.
COPYRIGHT © 1976, DIGITAL EQUIPMENT CORPORATION"

REVISIONS		
CHK	CHANGE NO.	REV
-	[illegible]	C

M8525-00005 C1

digital	DRN. E. Smith	DATE 22-JUN-76	ENG. T. Eggers DATE 23-JUN-76
	CHK. E. Smith	DATE 23-JUN-76	BOARD LOCATION: SHEET 1 OF 2
M8251.DRW[4,427]	22-JUN-76 19:55	NEXT HIGHER ASSEMBLY:	
FIRST USED ON OPTION/MODEL: KL10		B-DD-M8525-0	

TITLE: EBOX CONTROL #2 TERMINATORS

SIZE	CODE	NUMBER	REV.
D	CS	M8525-0-RES	C1

154

RESISTOR LOC(PIN)	SHOWN ON DRW#	REF	VALUE	TERMINATES SIGNAL
R154(1)	CON1	D7	68Ω	CRAM COND 02 H
R157(1)	CON1	D2	68Ω	CRAM COND 03 H
R160(1)	CON1	D2	68Ω	CRAM COND 04 H
R159(1)	CON1	D2	68Ω	CRAM COND 05 H
R110(1)	CON5	B3	68Ω	-CRAM MEM 02 A H
R62(1)	CON4	B7	68Ω	CSH PAR BIT A H
R60(1)	CON4	A7	68Ω	CSH PAR BIT B H
R179(1)	CON4	B4	68Ω	-CTL EBUS XFER H
R91(1)	CON2	C7	68Ω	-CTL SPEC/FLAG CTL H
R40(1)	CON2	A7	68Ω	-DIAG CONTROL FUNC 01X H
R100(1)	CON4	B5	68Ω	EBUS PARITY ACTIVE E H
R64(1)	CON4	A7	68Ω	EBUS PARITY E H
R130(1)	CON2	C5	68Ω	IR I/O LEGAL H
R6(1)	CON2	B3	68Ω	-MB21 RD-PSE-WR REF H
R66(1)	CON1	A2	68Ω	MCL LOAD VMA H
R167(1)	CON5	C7	68Ω	MCL MBOX CYC REQ H
R173(1)	CON5	C3	68Ω	MCL SKIP SATISFIED H
R183(1)	CON5	A6	68Ω	-MCL STORE AR H
R184(1)	CON5	B3	68Ω	-MCL VMA FETCH H
R94(1)	CON2	D7	68Ω	MTR INTERRUPT REQ H
R74(1)	CON2	A2	68Ω	PI2 EXT TRAN REC H
R92(1)	CON2	D7	68Ω	PI2 READY H
R78(1)	CON2	A2	68Ω	PI5 EBUS CP GRANT H
R3(1)	CON2	B3	68Ω	-SCD PUBLIC A H
R96(1)	CON2	C5	68Ω	-SCD USER IOT A H
R106(1)	CON5	A6	68Ω	-VMA AC REF H

NOTE:

1. ALL TERMINATORS HAVE PIN TWO CONNECTED TO -2.0V AND ARE 5% 1/4WATT UNLESS OTHERWISE SPECIFIED
2. ENTRIES ARE SORTED BY SIGNAL NAME
3. % INDICATES OUTPUT OF DIP LOC AND
   () INDICATES PIN NUMBER

"THIS DRAWING AND SPECIFICATIONS, HEREIN, ARE THE PROPERTY OF DIGITAL EQUIPMENT CORPORATION AND SHALL NOT BE REPRODUCED OR COPIED OR USED IN WHOLE OR IN PART AS THE BASIS FOR THE MANUFACTURE OR SALE OF ITEMS WITHOUT WRITTEN PERMISSION.
COPYRIGHT © 1976, DIGITAL EQUIPMENT CORPORATION"

REVISIONS

CHK	CHANGE NO.	REV
	M8525-00005	C1

DRN. C. Smith DATE 22-JUN-76 ENG. T. Eggers DATE 23-JUN-76
CHK. C. Smith DATE 23-JUN-76 BOARD LOCATION: SHEET 2 OF 2
M8525.DWG(4,427) 22-JUN-76 19:55 NEXT HIGHER ASSEMBLY: B-DD-M8525-0
FIRST USED ON OPTION/MODEL: KL10

TITLE: EBOX CONTROL #2 TERMINATORS

SIZE	CODE	NUMBER	REV.
D	CS	M8525-0-RES	C1

155

REVISION CONTROL SHEET

CUSTOMER PRINT SET	MFG SET	DRAWING NO	NO OF SHT	DESCRIPTION	OPTION NO/FILE DATE	REVISIONS	
				MODULE REVISION		F	H
		D-UA-M8525-0-0	7	EBOX CONTROL #2		E	F
		D-CS-M8525-0-CON1	1	EBOX CONTROL #2 CRAM COND FIELD		D	D
		D-CS-M8525-0-CON2	1	EBOX CONTROL #2 CONSOLE CONTROL		D	D
		D-CS-M8525-0-CON3	1	EBOX CONTROL #2 INTERNAL I/O		C	D
		D-CS-M8525-0-CON4	1	EBOX CONTROL #2 PARITY LOGIC		E	E
		D-CS-M8525-0-CON5	1	EBOX CONTROL #2 XFER, FM WRITE		C	C
		D-CS-M8525-0-CON6	1	EBOX CONTROL #2 POWER, GND, CAPS		B	C
		D-CS-M8525-0-RES	2	EBOX CONTROL #2 TERMINATORS		D	E
		K-CO-M8525-0-4	1	EBOX CONTROL #2 (CALDEC DATA BASE)		C	C
		D-AH-M8525-0-5	4	EBOX CONTROL #2		C	C
		B-MH-M8525-0-6	1	MODULE ECO HISTORY		E	F
		5010689	-	ETCH CIRCUIT BOARD		C	C
		P00-M8525-00		PROCESS SHEET (REF ONLY)			
					ECO NO	00005	00006

CUSTOMER PRINT SET CODES
X = PRINT OF DOCUMENT INCLUDED IN PRINT SET
C = INCLUDES ALL PRINTS INDICATED ON DOCUMENT
S = CONFIDENTIAL AUTHORIZED SIGNATURE REQUIRED

TITLE		SIZE	CODE	NUMBER	REV
EBOX CONTROL #2	SHEET 3 OF 3	B	DD	M8525-0	F

MR

THIS DRAWING AND SPECIFICATIONS, DESIGNS, AND THE PROPERTY OF DIGITAL EQUIPMENT CORPORATION AND SHALL NOT BE REPRODUCED OR COPIED OR USED IN WHOLE OR IN PART AS THE BASIS FOR THE MANUFACTURE OR SALE BY OTHER THAN DIGITAL EQUIPMENT CORPORATION.
COPYRIGHT © 1976 DIGITAL EQUIPMENT CORPORATION

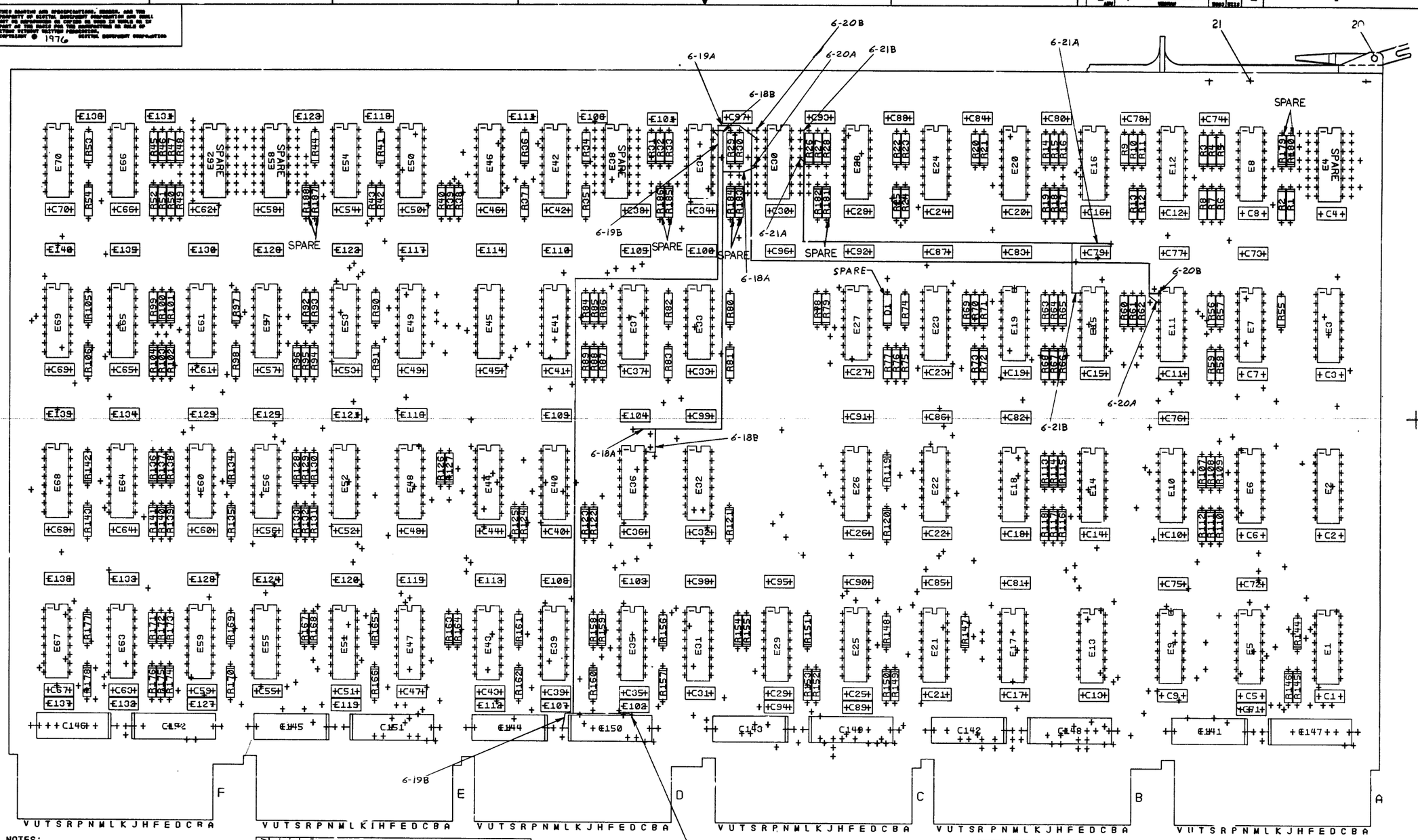

NOTES:

CHK	CHANGE NO	REV
	M8525-00005	E
	Eport 9-10-76	
	T. EDGERS	

ETCH REV. C
P.C. DESIGN DATA BASE REV. C

SIGNATURES	DATE
DRN.	11 JUNE 76
CHK'D.	
ENG.	12 Aug 76
PROJ.ENG.	12 Aug 76
PROD.	12 Aug 76
SCALE 2/1	

digital

TITLE DIAGNOSTIC BOARD

SIZE	CODE	NUMBER	REV
D	UA	M8525-0-0	F

SHT. 2 OF 6
NEXT HIGHER ASSY. B-DD-M8525-0

157 MR

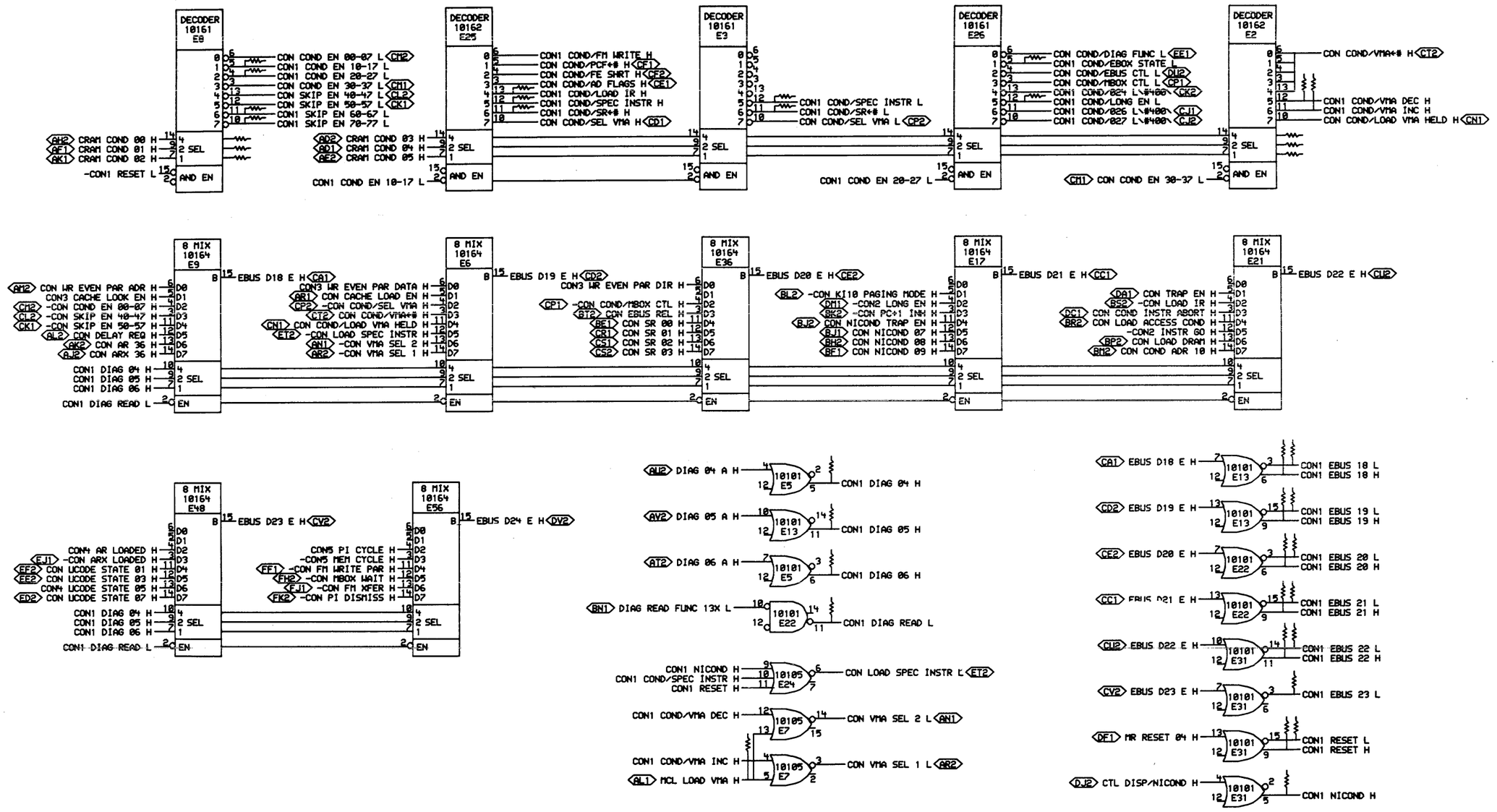

1 OF 6

REVISIONS		
CHK	CHANGE NO.	REV

digital

DESIGN: Zoosky DATE 06-MAY-77 ENG: DATE 5-7-77
CHK'D: DATE BOARD LOCATION: 4RE35
SHEET 1 OF 1
CON1EA.DRW[4,5563] 14-JUL-76 08:00 NEXT HIGHER ASSEMBLY:
FIRST USED ON OPTION/MODEL: KL10 B-DD-M8546-0

TITLE: EBOX CONTROL #2 CRAM COND FIELD

SIZE	CODE	NUMBER	REV.
D	CS	M8525-0-CON1	D

158

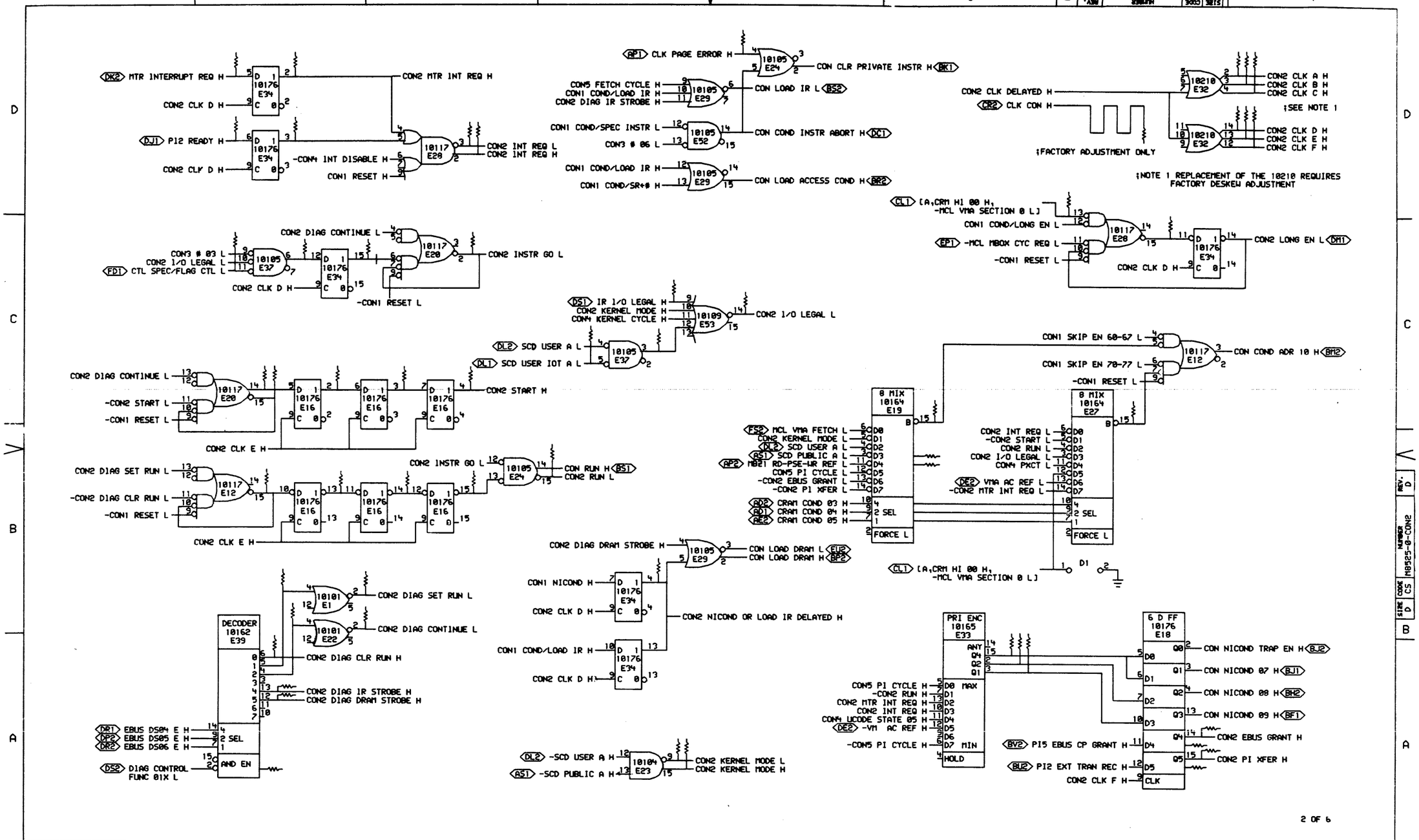

"THIS DRAWING AND SPECIFICATIONS, HEREIN, A E THE PROPERTY OF DIGITAL EQUIPMENT CORPORATION AND SHALL NOT BE REPRODUCED OR COPIED OR USED IN WHOLE OR IN PART AS THE BASIS FOR THE MA UFACTURE OR SALE OF ITEMS WITHOUT WRITTEN PERMISSION.
COPYRIGHT © 1976, DIGITAL EQUIPMENT CORPORATION"

REVISIONS		
CHK	CHANGE NO.	REV
	M8525-00005	D

DRN. DATE 15-JUL-76 ENG. DATE 19 Jul 76
CHK'D DATE 19 Jul 76 BOARD LOCATION: 4AF35
SHEET 1 OF 1
CON2EA.DRU[4,161] 14-JUL-76 11:24 NEXT HIGHER ASSEMBLY:
FIRST USED ON OPTION/MODEL: KL10 B-DD-M8546-0

TITLE: EBOX CONTROL #2 CONSOLE CONTROL

SIZE	CODE	NUMBER	REV.
D	CS	M8525-0-CON2	D

159

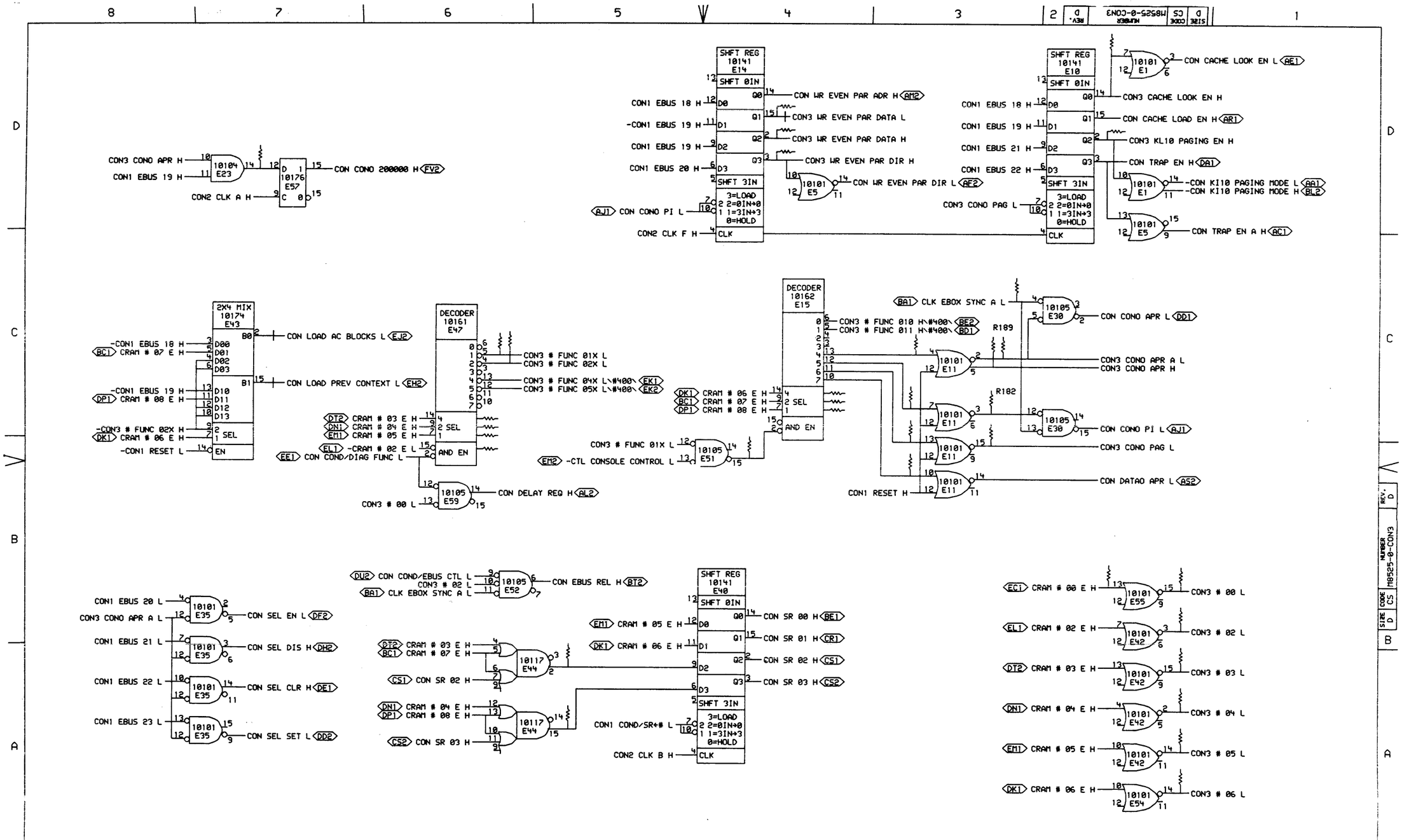

3 OF 6

"THIS DRAWING AND SPECIFICATIONS, HEREIN, ARE THE PROPERTY OF DIGITAL EQUIPMENT CORPORATION AND SHALL NOT BE REPRODUCED OR COPIED OR USED IN WHOLE OR IN PART AS THE BASIS FOR THE MANUFACTURE OR SALE OF ITEMS WITHOUT WRITTEN PERMISSION.
COPYRIGHT © 1977, DIGITAL EQUIPMENT CORPORATION"

REVISIONS		
CHK	CHANGE NO.	REV
—	M8525-00006	D
	Release as Rev "D"	
B. BRUCKERT		

digital	DRN.	DATE 30-MAR-77	ENG.	DATE 1 Apr 77	TITLE: EBOX CONTROL #2 INTERNAL I/O
	CHK.	DATE	BOARD LOCATION: 4AF35		
CON3EA.DRW[4,556] 30-MAR-77 09:40			SHEET 1 OF 1		
FIRST USED ON OPTION/MODEL: KL10			NEXT HIGHER ASSEMBLY: B-DD-M8525-0		SIZE D · CODE CS · NUMBER M8525-0-CON3 · REV. D

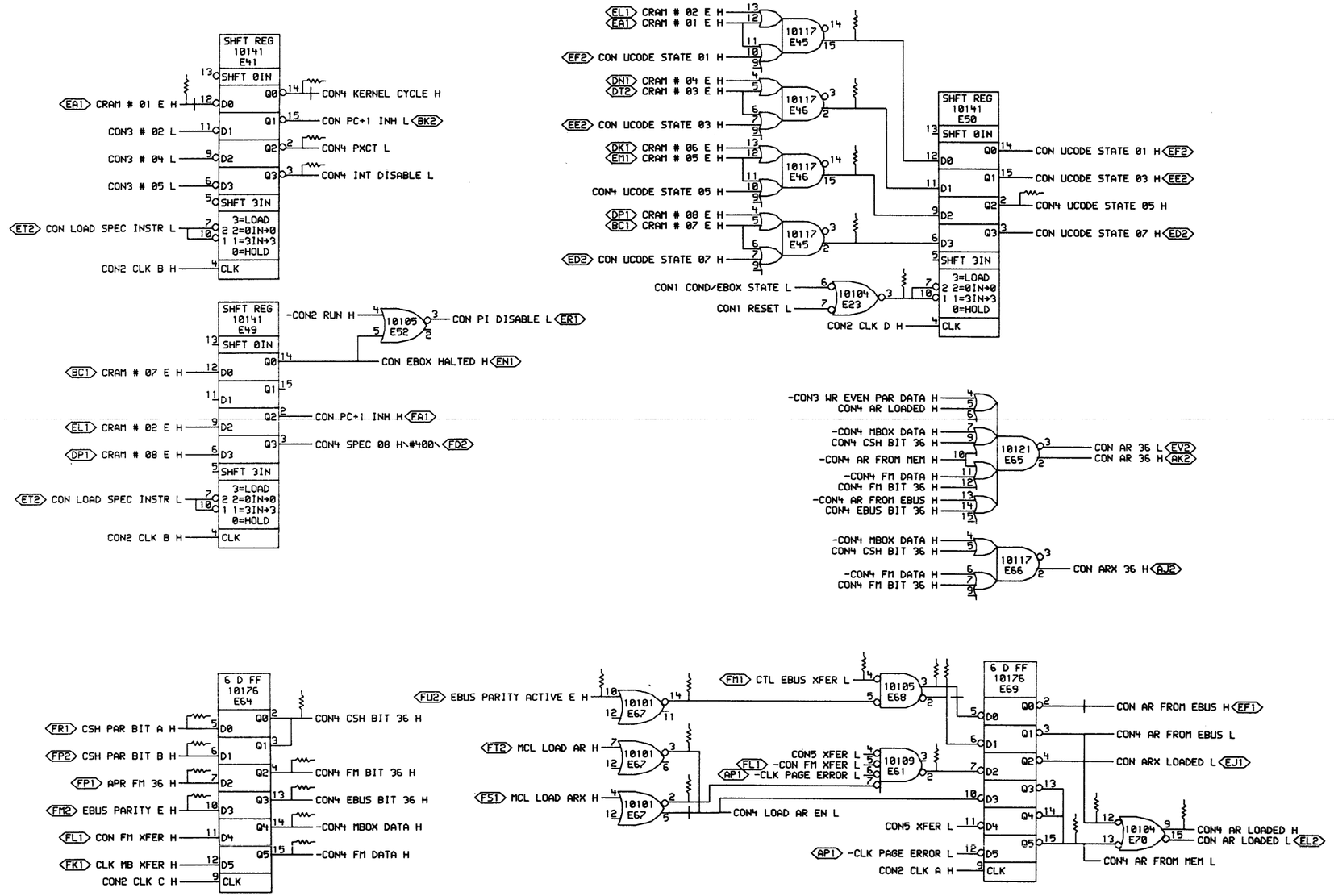

4 OF 6

"THIS DRAWING A D SPECIFICATIONS, HEREIN, A E THE PROPERTY OF DIGITAL EQUIPMENT CORPORATION AND SHALL NOT BE REPRODUCED OR COPIED OR USED IN WHOLE OR IN PART AS THE BASIS FOR THE MA UFACTURE OR SALE OF ITEMS WITHOUT WRITTEN PERMISSION.
COPYRIGHT © 1976, DIGITAL EQUIPMENT CORPORATION"

REVISIONS		
CHK	CHANGE NO.	REV
4	M8525-00005	E

CON4EA.DRW[4,161] 14-JUL-76 11:29

FIRST USED ON OPTION/MODEL: KL10

NEXT HIGHER ASSEMBLY: B-DD-M8546-0

DRN. DATE 15-JUL-76 ENG. DATE 19-JUL-76 CHK. DATE 19-JUL-76

BOARD LOCATION: 4AF35 SHEET 1 OF 1

TITLE: EBOX CONTROL #2 PARITY LOGIC

SIZE	CODE	NUMBER	REV.
D	CS	M8525-0-CON4	E

161

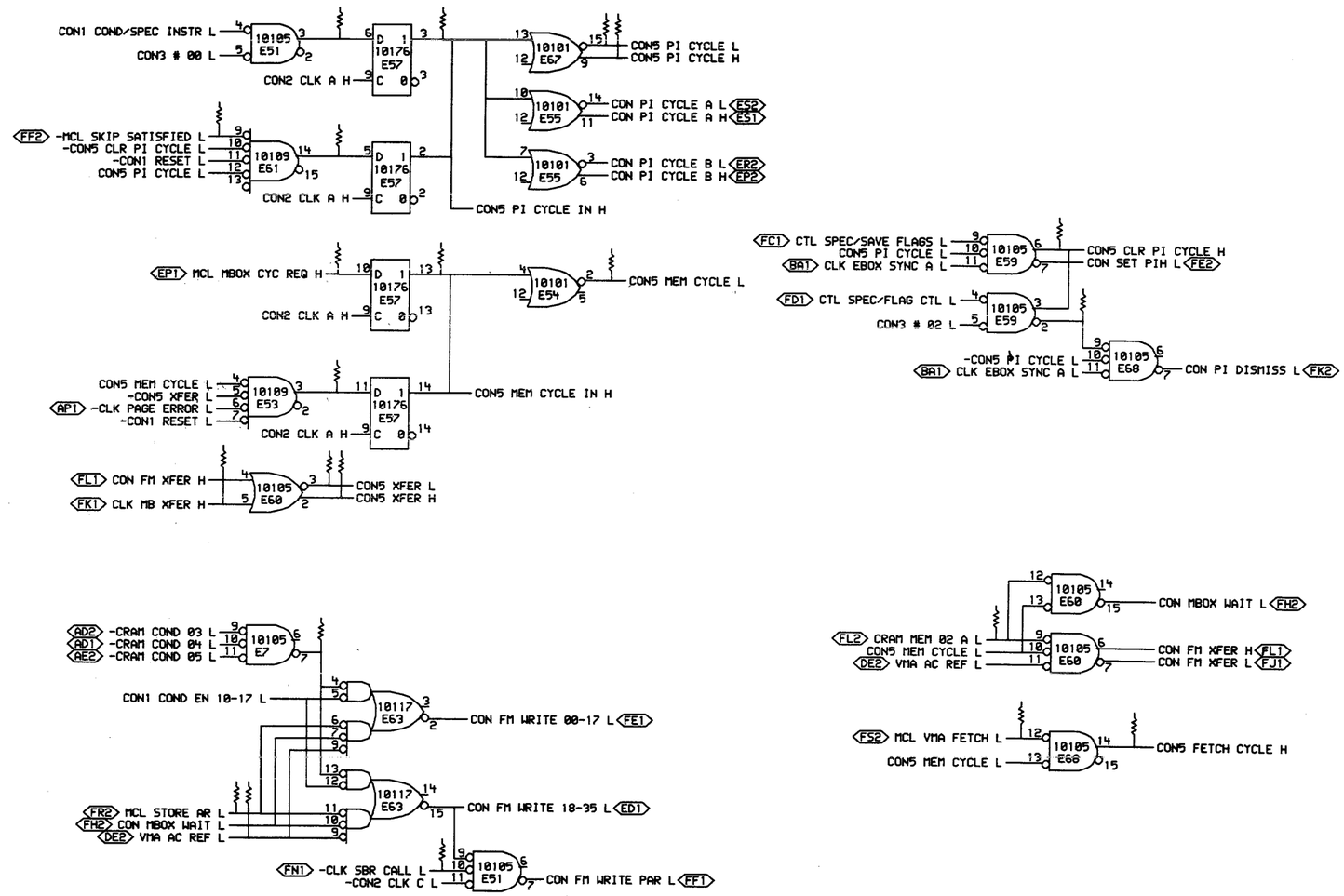

5 OF 6

"THIS DRAWING A D SPECIFICATIONS, HEREIN, A E THE PROPERTY OF DIGITAL EQUIPMENT CORPORATION A D SHALL NOT BE REPRODUCED OR COPIED OR USED IN WHOLE OR IN PART A" THE BA"IS FOR THE MANUFACTURE OR SALE OF ITEMS WITHOUT WRITTEN PERMISSION.
COPYRIGHT © 1976, DIGITAL EQUIPMENT CORPORATION"

REVISIONS		
CHK	CHANGE NO.	REV
	M8575-00005	C

digital

DRN. 15-JUL-76
CHK'D. 19 JUL 76
ENG. 19 JUL 76
CON5EA.DRWC4,161) 14-JUL-76 11:30
FIRST USED ON OPTION/MODEL: KL10
NEXT HIGHER ASSEMBLY: B-DD-M8546-0
BOARD LOCATION: 4AE35
SHEET 1 OF 1

TITLE: EBOX CONTROL #2 XFER, FM WRITE

SIZE	CODE	NUMBER	REV.
D	CS	M8525-0-CON5	C

162

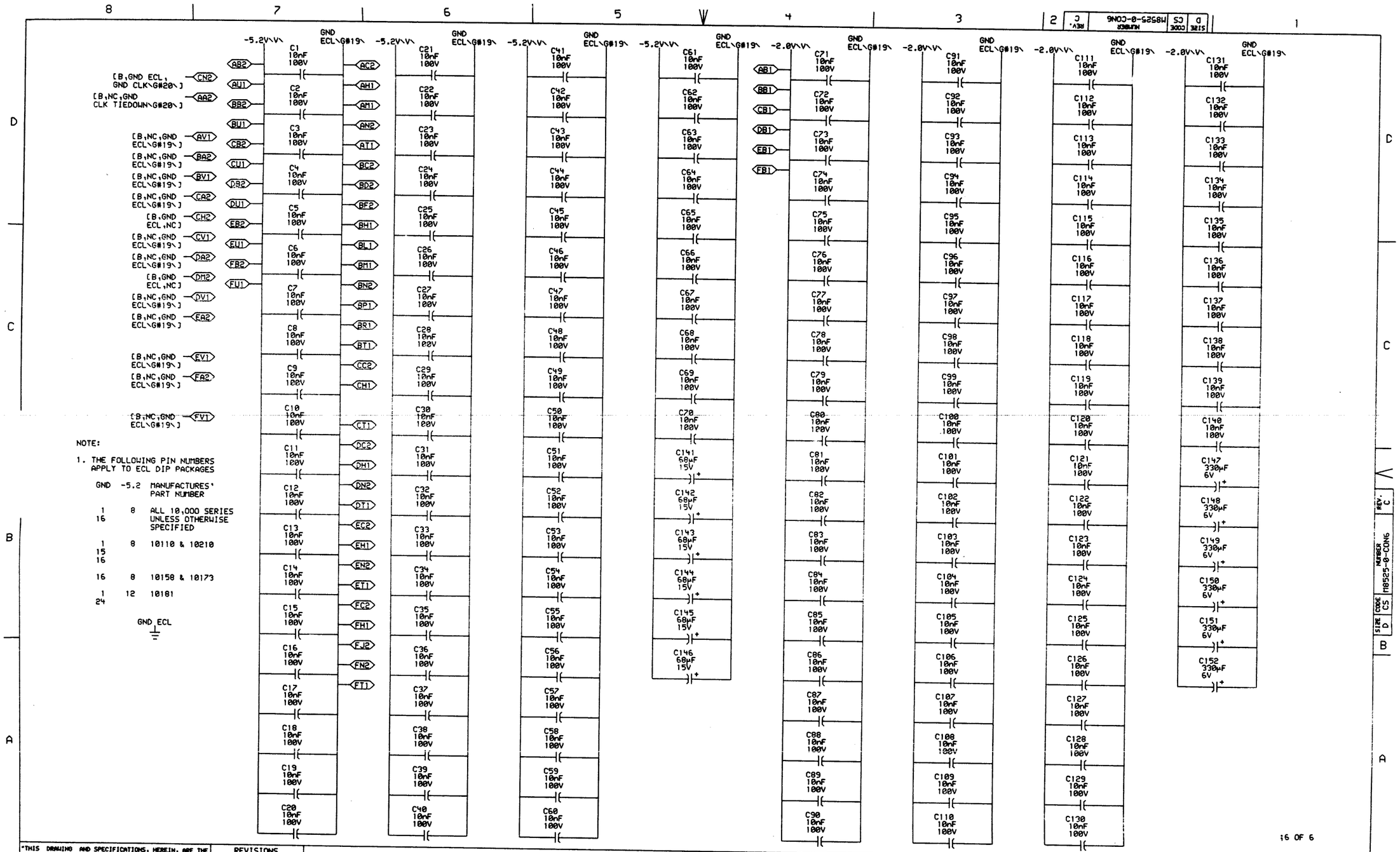
-5.2V\V\
GND ECL\G#19\
-2.0V\V\
[B,GND ECL, GND CLK\G#20\] CN2
[B,NC,GND CLK TIEDOWN\G#20\] AA2
[B,NC,GND ECL\G#19\] AV1
[B,NC,GND ECL\G#19\] BA2
[B,NC,GND ECL\G#19\] BV1
[B,NC,GND ECL\G#19\] CA2
[B,GND ECL,NC] CH2
[B,NC,GND ECL\G#19\] CV1
[B,NC,GND ECL\G#19\] DA2
[B,GND ECL,NC] DM2
[B,NC,GND ECL\G#19\] DV1
[B,NC,GND ECL\G#19\] EA2
[B,NC,GND ECL\G#19\] EV1
[B,NC,GND ECL\G#19\] FA2
[B,NC,GND ECL\G#19\] FV1
AB2 AU1 BB2 BU1 CB2 CU1 DB2 DU1 EB2 EU1 FB2 FU1
AC2 AH1 AM1 AN2 AT1 BC2 BD2 BF2 BH1 BL1 BM1 BN2 BP1 BR1 BT1 CC2 CH1 CT1 DC2 DH1 DN2 DT1 EC2 EH1 EN2 ET1 FC2 FH1 FJ2 FN2 FT1
AB1 BB1 CB1 DB1 EB1 FB1
C1 C2 C3 C4 C5 C6 C7 C8 C9 C10 C11 C12 C13 C14 C15 C16 C17 C18 C19 C20
C21 C22 C23 C24 C25 C26 C27 C28 C29 C30 C31 C32 C33 C34 C35 C36 C37 C38 C39 C40
C41 C42 C43 C44 C45 C46 C47 C48 C49 C50 C51 C52 C53 C54 C55 C56 C57 C58 C59 C60
C61 C62 C63 C64 C65 C66 C67 C68 C69 C70 C71 C72 C73 C74 C75 C76 C77 C78 C79 C80 C81 C82 C83 C84 C85 C86 C87 C88 C89 C90
C91 C92 C93 C94 C95 C96 C97 C98 C99 C100 C101 C102 C103 C104 C105 C106 C107 C108 C109 C110
C111 C112 C113 C114 C115 C116 C117 C118 C119 C120 C121 C122 C123 C124 C125 C126 C127 C128 C129 C130
C131 C132 C133 C134 C135 C136 C137 C138 C139 C140 C141 C142 C143 C144 C145 C146 C147 C148 C149 C150 C151 C152
10nF 100V
68µF 15V
330µF 6V
NOTE:
1. THE FOLLOWING PIN NUMBERS APPLY TO ECL DIP PACKAGES
GND -5.2 MANUFACTURES' PART NUMBER
1 8 ALL 10,000 SERIES
16 UNLESS OTHERWISE SPECIFIED
1 8 10110 & 10210
15
16
16 8 10158 & 10173
1 12 10181
24
GND ECL
;6 OF 6
"THIS DRAWING AND SPECIFICATIONS, HEREIN, ARE THE PROPERTY OF DIGITAL EQUIPMENT CORPORATION AND SHALL NOT BE REPRODUCED OR COPIED OR USED IN WHOLE OR IN PART AS THE BASIS FOR THE MANUFACTURE OR SALE OF ITEMS WITHOUT WRITTEN PERMISSION.
COPYRIGHT © 1977, DIGITAL EQUIPMENT CORPORATION"
REVISIONS
CHK CHANGE NO. REV
M8525-00006 C
B.BRUCKERT
digital
DRW. 30-MAR-77
CHK. 3/30/77
DATE
ENG. Tom Fagan
DATE 1 Apr 77
BOARD LOCATION: 4AF35
SHEET 1 OF 1
CONSEA.DRW[4,556] 30-MAR-77 09:37
NEXT HIGHER ASSEMBLY:
FIRST USED ON OPTION/MODEL: KL10
B-DD-M8525-0
TITLE: EBOX CONTROL #2
POWER, GND, CAPS
D CODE CS NUMBER M8525-0-CON6 REV. C
SIZE D CODE CS NUMBER M8525-0-CON6 REV. C

163

RESISTOR LOC(PIN)	SHOWN ON DRW#	REF	VALUE	TERMINATES SIGNAL
R102(1)	CON3	C3	68Ω	%E11(3)
R13(1)	CON2	B7	68Ω	%E12(15)
R58(1)	CON3	B3	68Ω	%E15(10)
R59(1)	CON3	B3	68Ω	%E15(11)
R62(1)	CON3	C3	68Ω	%E15(12)
R61(1)	CON3	C3	68Ω	%E15(13)
R10(1)	CON2	B7	68Ω	%E16(13)
R9(1)	CON2	B6	68Ω	%E16(14)
R20(1)	CON2	B6	68Ω	%E16(15)
R15(1)	CON2	C7	68Ω	%E16(2)
R17(1)	CON2	C6	68Ω	%E16(3)
R11(1)	CON2	C3	68Ω	%E19(15)
R16(1)	CON2	C7	68Ω	%E20(14)
R19(1)	CON2	C7	68Ω	%E20(15)
R92(1)	CON3	D7	68Ω	%E23(14)
R42(1)	CON4	C3	68Ω	%E23(3)
R12(1)	CON2	C2	68Ω	%E27(15)
R29(1)	CON2	C2	68Ω	%E28(15)
R114(1)	CON2	A3	68Ω	%E33(15)
R117(1)	CON2	A3	68Ω	%E33(2)
R118(1)	CON2	A3	68Ω	%E33(3)
R21(1)	CON2	C6	68Ω	%E34(15)
R26(1)	CON2	D7	68Ω	%E34(3)
R126(1)	CON2	C5	68Ω	%E37(3)
R33(1)	CON2	C7	68Ω	%E37(6)
R120(1)	CON2	B7	68Ω	%E39(4)
R144(1)	CON2	B7	68Ω	%E39(5)
R125(1)	CON3	A5	68Ω	%E44(15)
R123(1)	CON3	A5	68Ω	%E44(2)
R40(1)	CON4	D4	68Ω	%E45(15)
R43(1)	CON4	C4	68Ω	%E45(2)
R38(1)	CON4	D4	68Ω	%E46(15)
R39(1)	CON4	D4	68Ω	%E46(2)
R65(1)	CON3	B4	68Ω	%E51(15)
R98(1)	CON5	D6	68Ω	%E51(3)
R96(1)	CON5	C6	68Ω	%E53(3)
R177(1)	CON5	C3	68Ω	%E59(2)
R97(1)	CON5	C5	68Ω	%E61(14)
R106(1)	CON4	A3	68Ω	%E61(2)
R143(1)	CON4	B4	68Ω	%E67(14)

RESISTOR LOC(PIN)	SHOWN ON DRW#	REF	VALUE	TERMINATES SIGNAL
R102(1)	CON4	A4	68Ω	%E67(2)
R53(1)	CON4	B3	68Ω	%E68(2)
R54(1)	CON4	B3	68Ω	%E68(3)
R172(1)	CON5	B6	68Ω	%E7(7)
R140(1)	CON4	A7	68Ω	APR FM 36 H
R121(1)	CON2	D2	68Ω	CLK CON H
R170(1)	CON3	C3	68Ω	-CLK EBOX SYNC A H
R134(1)	CON5	B6	68Ω	CLK MB XFER H
R50(1)	CON2	D4	68Ω	CLK PAGE ERROR H
R166(1)	CON5	A6	68Ω	CLK SBR CALL H
R171(1)	CON1	D7	68Ω	-CON1 COND EN 10-17 H
R119(1)	CON1	D7	68Ω	-CON1 COND EN 20-27 H
R76(1)	CON1	D3	68Ω	-CON1 COND/EBOX STATE H
R30(1)	CON1	D6	68Ω	CON1 COND/LOAD IR H
R22(1)	CON1	D3	68Ω	-CON1 COND/LONG EN H
R24(1)	CON1	D6	68Ω	CON1 COND/SPEC INSTR H
R168(1)	CON1	D4	68Ω	-CON1 COND/SPEC INSTR H
R151(1)	CON1	D6	68Ω	CON1 COND/SR+# H
R124(1)	CON1	D4	68Ω	-CON1 COND/SR+# H
R55(1)	CON1	D2	68Ω	CON1 COND/VMA DEC H
R56(1)	CON1	D2	68Ω	CON1 COND/VMA INC H
R133(1)	CON1	B4	68Ω	CON1 DIAG 04 H
R131(1)	CON1	B4	68Ω	CON1 DIAG 05 H
R132(1)	CON1	B4	68Ω	CON1 DIAG 06 H
R128(1)	CON1	B4	68Ω	-CON1 DIAG READ H
R107(1)	CON1	B2	68Ω	CON1 EBUS 18 H
R163(1)	CON1	B2	68Ω	-CON1 EBUS 18 H
R69(1)	CON1	B2	68Ω	CON1 EBUS 19 H
R161(1)	CON1	B2	68Ω	-CON1 EBUS 19 H
R115(1)	CON1	B2	68Ω	CON1 EBUS 20 H
R159(1)	CON1	B2	68Ω	-CON1 EBUS 20 H
R110(1)	CON1	B2	68Ω	CON1 EBUS 21 H
R160(1)	CON1	B2	68Ω	-CON1 EBUS 21 H
R112(1)	CON1	B2	68Ω	CON1 EBUS 22 H
R157(1)	CON1	B2	68Ω	-CON1 EBUS 22 H
R156(1)	CON1	A2	68Ω	-CON1 EBUS 23 H
R25(1)	CON1	A2	68Ω	CON1 NICOND H
R5(1)	CON1	A2	68Ω	CON1 RESET H
R75(1)	CON1	A2	68Ω	-CON1 RESET H
94(1)	CON1	D7	68Ω	-CON1 SKIP EN 60-67 H

RESISTOR LOC(PIN)	SHOWN ON DRW#	REF	VALUE	TERMINATES SIGNAL
R7(1)	CON1	D7	68Ω	-CON1 SKIP EN 70-77 H
R101(1)	CON2	D1	68Ω	CON2 CLK A H
R90(1)	CON2	D1	68Ω	CON2 CLK B H
R139(1)	CON2	D1	68Ω	CON2 CLK C H
R41(1)	CON2	D1	68Ω	CON2 CLK D H
R18(1)	CON2	D1	68Ω	CON2 CLK E H
R108(1)	CON2	D1	68Ω	CON2 CLK F H
R8(1)	CON2	A7	68Ω	CON2 DIAG CLR RUN H
R14(1)	CON2	B6	68Ω	-CON2 DIAG CONTINUE H
R154(1)	CON2	A7	68Ω	CON2 DIAG DRAM STROBE H
R153(1)	CON2	A7	68Ω	CON2 DIAG IR STROBE H
R3(1)	CON2	B6	68Ω	-CON2 DIAG SET RUN H
R63(1)	CON2	A2	68Ω	CON2 EBUS GRANT H
R78(1)	CON2	C4	68Ω	-CON2 I/O LEGAL H
R147(1)	CON2	C6	68Ω	-CON2 INSTR GO H
R81(1)	CON2	D6	68Ω	CON2 INT REQ H
R79(1)	CON2	D6	68Ω	-CON2 INT REQ H
R91(1)	CON2	A5	68Ω	CON2 KERNEL MODE H
R71(1)	CON2	A5	68Ω	-CON2 KERNEL MODE H
R82(1)	CON2	D7	68Ω	CON2 MTR INT REQ H
R155(1)	CON2	B5	68Ω	CON2 NICOND OR LOAD IR DELAYED H
R64(1)	CON2	A2	68Ω	CON2 PI XFER H
R129(1)	CON2	B5	68Ω	-CON2 RUN H
R74(1)	CON2	C6	68Ω	CON2 START H
R169(1)	CON3	B2	68Ω	-CON3 # 00 H
R173(1)	CON3	B2	68Ω	-CON3 # 02 H
R87(1)	CON3	A2	68Ω	-CON3 # 03 H
R88(1)	CON3	A2	68Ω	-CON3 # 04 H
R89(1)	CON3	A2	68Ω	-CON3 # 05 H
R138(1)	CON3	A2	68Ω	-CON3 # 06 H
R165(1)	CON3	C6	68Ω	-CON3 # FUNC 01X H
R162(1)	CON3	C6	68Ω	-CON3 # FUNC 02X H
R145(1)	CON3	D2	68Ω	CON3 CACHE LOOK EN H
R73(1)	CON3	C3	68Ω	CON3 COND APR H
R189(1)	CON3	C3	68Ω	-CON3 COND APR A H
R111(1)	CON3	B3	68Ω	-CON3 COND PAG H
R146(1)	CON3	D2	68Ω	CON3 KL10 PAGING EN H
R109(1)	CON3	D4	68Ω	CON3 WR EVEN PAR DATA H
R99(1)	CON3	D4	68Ω	-CON3 WR EVEN PAR DATA H
R122(1)	CON3	D4	68Ω	CON3 WR EVEN PAR DIR H

RESISTOR LOC(PIN)	SHOWN ON DRW#	REF	VALUE	TERMINATES SIGNAL
R51(1)	CON4	A3	68Ω	-CON4 AR FROM EBUS H
R52(1)	CON4	A3	68Ω	-CON4 AR FROM MEM H
R127(1)	CON4	A2	68Ω	CON4 AR LOADED H
R46(1)	CON4	B6	68Ω	CON4 CSH BIT 36 H
R100(1)	CON4	A6	68Ω	CON4 EBUS BIT 36 H
R48(1)	CON4	A6	68Ω	CON4 FM BIT 36 H
R47(1)	CON4	A6	68Ω	-CON4 FM DATA H
R28(1)	CON4	D6	68Ω	-CON4 INT DISABLE H
R95(1)	CON4	D6	68Ω	CON4 KERNEL CYCLE H
R105(1)	CON4	A4	68Ω	-CON4 LOAD AR EN H
R45(1)	CON4	A6	68Ω	-CON4 MBOX DATA H
R77(1)	CON4	D6	68Ω	-CON4 PXCT H
R80(1)	CON4	D3	68Ω	CON4 UCODE STATE 05 H
R103(1)	CON5	C3	68Ω	CON5 CLR PI CYCLE H
R152(1)	CON5	B3	68Ω	CON5 FETCH CYCLE H
R138(1)	CON5	C5	68Ω	-CON5 MEM CYCLE H
R44(1)	CON5	C6	68Ω	CON5 MEM CYCLE IN H
R83(1)	CON5	D5	68Ω	CON5 PI CYCLE H
R68(1)	CON5	D5	68Ω	-CON5 PI CYCLE H
R170(1)	CON5	D6	68Ω	CON5 PI CYCLE IN H
R93(1)	CON5	B6	68Ω	CON5 XFER H
R49(1)	CON5	B6	68Ω	-CON5 XFER H
R167(1)	CON3	B2	68Ω	CRAM # 00 E H
R84(1)	CON4	D7	68Ω	CRAM # 01 E H
R37(1)	CON3	B6	68Ω	CRAM # 02 E H
R35(1)	CON3	C6	68Ω	CRAM # 03 E H
R34(1)	CON3	C6	68Ω	CRAM # 04 E H
R36(1)	CON3	C6	68Ω	CRAM # 05 E H
R60(1)	CON3	C4	68Ω	CRAM # 06 E H
R164(1)	CON3	C4	68Ω	CRAM # 07 E H
R66(1)	CON3	C4	68Ω	CRAM # 08 E H
R1(1)	CON1	D7	68Ω	CRAM COND 00 H
R2(1)	CON1	D7	68Ω	CRAM COND 01 H
R6(1)	CON1	D7	68Ω	CRAM COND 02 H
R148(1)	CON1	D2	68Ω	CRAM COND 03 H
R149(1)	CON1	D2	68Ω	CRAM COND 04 H
R150(1)	CON1	D2	68Ω	CRAM COND 05 H
R135(1)	CON5	B3	68Ω	-CRAM MEM 02 A H
R137(1)	CON4	B7	68Ω	CSH PAR BIT A H
R136(1)	CON4	A7	68Ω	CSH PAR BIT B H

NOTE:

1. ALL TERMINATORS HAVE PIN TWO CONNECTED TO -2.0V AND ARE 5% 1/4WATT UNLESS OTHERWISE SPECIFIED
2. ENTRIES ARE SORTED BY SIGNAL NAME
3. % INDICATES OUTPUT OF DIP LOC AND
   () INDICATES PIN NUMBER

"THIS DRAWING AND SPECIFICATIONS, HEREIN, ARE THE PROPERTY OF DIGITAL EQUIPMENT CORPORATION AND SHALL NOT BE REPRODUCED OR COPIED OR USED IN WHOLE OR IN PART AS THE BASIS FOR THE MANUFACTURE OR SALE OF ITEMS WITHOUT WRITTEN PERMISSION.
COPYRIGHT © 1977, DIGITAL EQUIPMENT CORPORATION"

REVISIONS

CHK	CHANGE NO.	REV
	[illegible]	E
	[illegible]	
	[illegible]	
	[illegible]

RESISTOR LOC(PIN)	SHOWN ON DRW#	REF	VALUE	TERMINATES SIGNAL
R142(1)	CON4	B4	68Ω	-CTL EBUS XFER H
R85(1)	CON2	C7	68Ω	-CTL SPEC/FLAG CTL H
R158(1)	CON2	A7	68Ω	-DIAG CONTROL FUNC Ø1X H
R176(1)	CON4	B5	68Ω	EBUS PARITY ACTIVE E H
R141(1)	CON4	A7	68Ω	EBUS PARITY E H
R94(1)	CON2	C5	68Ω	IR I/O LEGAL H
R67(1)	CON2	B3	68Ω	-MBZ1 RD-PSE-WR REF H
R57(1)	CON1	A4	68Ω	MCL LOAD VMA H
R27(1)	CON5	C6	68Ω	MCL MBOX CYC REQ H
R104(1)	CON5	D6	68Ω	MCL SKIP SATISFIED H
R174(1)	CON5	A6	68Ω	-MCL STORE AR H
R72(1)	CON5	B3	68Ω	-MCL VMA FETCH H
R31(1)	CON2	D7	68Ω	MTR INTERRUPT REQ H
R113(1)	CON2	A2	68Ω	PI2 EXT TRAN REC H
R32(1)	CON2	D7	68Ω	PI2 READY H
R116(1)	CON2	A2	68Ω	PI5 EBUS CP GRANT H
R70(1)	CON2	B3	68Ω	-SCD PUBLIC A H
R86(1)	CON2	C5	68Ω	-SCD USER IOT A H
R175(1)	CON5	A6	68Ω	-VMA AC REF H
R23(1)	CON2	D2	68Ω	[A,CRM HI 00 H, -MCL VMA SECTION 0 L]

NOTE:

1. ALL TERMINATORS HAVE PIN TWO CONNECTED TO -2.0V AND ARE 5% 1/4WATT UNLESS OTHERWISE SPECIFIED
2. ENTRIES ARE SORTED BY SIGNAL NAME
3. % INDICATES OUTPUT OF DIP LOC AND ( ) INDICATES PIN NUMBER

"THIS DRAWING AND SPECIFICATIONS, HEREIN, ARE THE PROPERTY OF DIGITAL EQUIPMENT CORPORATION AND SHALL NOT BE REPRODUCED OR COPIED OR USED IN WHOLE OR IN PART AS THE BASIS FOR THE MANUFACTURE OR SALE OF ITEMS WITHOUT WRITTEN PERMISSION.
COPYRIGHT © 1977, DIGITAL EQUIPMENT CORPORATION"

REVISIONS		
CHK	CHANGE NO.	REV

digital

DRN. C. Smith DATE 29-MAR-77 ENG. Tom Hogue DATE 29-MAR-77
CHKD. Mike Konopka DATE 3/30/77 BOARD LOCATION: SHEET 2 OF 2
R85252.DRW[4,556] 29-MAR-77 09:43 NEXT HIGHER ASSEMBLY: B-DD-M8525-0
FIRST USED ON OPTION/MODEL: KL10

TITLE: EBOX CONTROL #2 TERMINATORS

SIZE	CODE	NUMBER	REV.
D	CS	M8525-0-RES	E

SIZE D CODE CS NUMBER M8525-0-RES REV. E

165

SIZE	CODE	NUMBER	REV.
B	DD	M8526-YA	A

DRAWING NO.	NO. OF SHTS	PART NO.	DESCRIPTION	REVISIONS	
			MODULE REVISION	A	B
D-UA-M8526-YA-Ø	5		CLK CONTROL	-	A
D-CS-M8526-YA-CLK1	1		CLK CONTROL, CLOCK CONTROL	-	A
D-CS-M8526-YA-CLK2	1		CLK CONTROL, DIAGNOSTIC CONTROL	-	-
D-CS-M8526-YA-CLK3	1		CLK CONTROL, EBOX CLK CONTROL	-	-
D-CS-M8526-YA-CLK4	1		CLK CONTROL, PAGE FAIL LOGIC	-	-
D-CS-M8526-YA-CLK5	1		CLK CONTROL, DIAGNOSTICS	-	-
D-CS-M8526-YA-CLK6	1		CLK CONTROL, POWER, GND, CAPS	-	-
D-CS-M8526-YA-RES	2		CLK CONTROL, TERMINATORS	-	-
D-AH-M8526-Ø-Ø	4		CLK CONTROL	B	B
	-	5010690	ETCHED CIRCUIT BOARD	C	C
M8526-Ø-L	-		P.C. DESIGN DATA BASE	REF	REF
M8526-Ø-PL	-		INSERTION P/L DATA BASE	REF	REF
POO-M8526-YA			PROCESS SHEETS	REF	REF

NOTES:

REVISIONS		
DATE	CHG NO	REV
5-77	ORIG	A

"THIS DRAWING AND SPECIFICATIONS, HEREIN, ARE THE PROPERTY OF DIGITAL EQUIPMENT CORPORATION AND SHALL NOT BE REPRODUCED OR COPIED OR USED IN WHOLE OR IN PART AS THE BASIS FOR THE MANUFACTURE OR SALE OF ITEMS WITHOUT WRITTEN PERMISSION.
COPYRIGHT © 1977 DIGITAL EQUIPMENT CORPORATION"

digital

USED ON OPTION/MODEL	
KL10	

DRN.	[illegible]	21FEB77
CHK'D.	R W Caunter	21FEB77
ENG.	W. Kendall	29FEB77
PROD.	W. Earley	16MAR77

TITLE: CLK CONTROL

SIZE	CODE	NUMBER	REV.
B	DD	M8526-YA	A

SHEET 1 OF 1

DRB 126 EN-01149-16-N176(325)

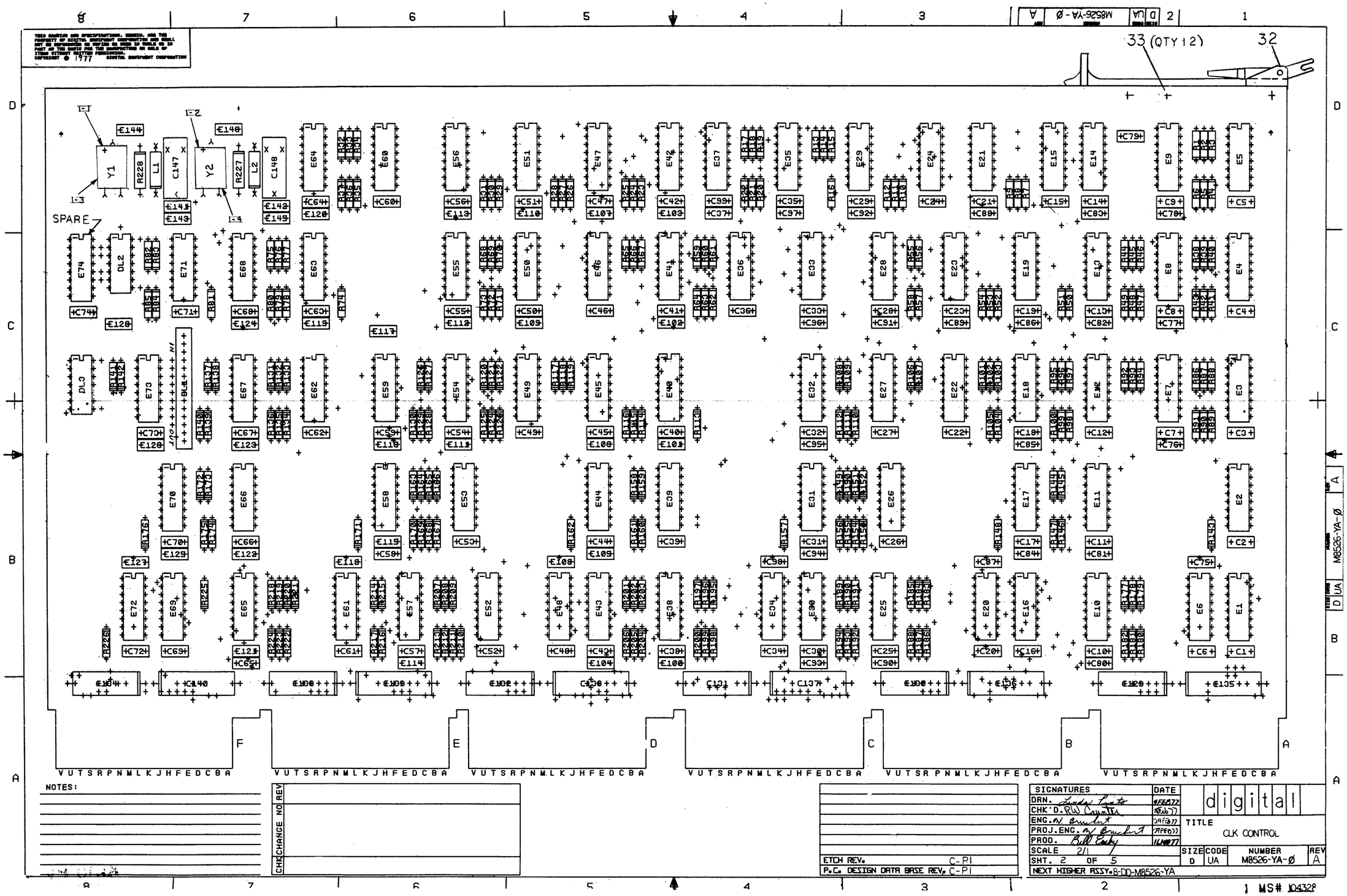
33 (QTY 12)
32
SPARE
NOTES:
CHK CHANGE NO REV
ETCH REV. C-P1
P.C. DESIGN DATA BASE REV. C-P1
SIGNATURES DATE
DRN.
CHK'D.
ENG.
PROJ.ENG.
PROD.
SCALE 2/1
SHT. 2 OF 5
NEXT HIGHER ASSY. B-DD-M8526-YA
digital
TITLE
CLK CONTROL
SIZE D
CODE UA
NUMBER M8526-YA-Ø
REV A
M8526-YA-Ø
MS# 10432

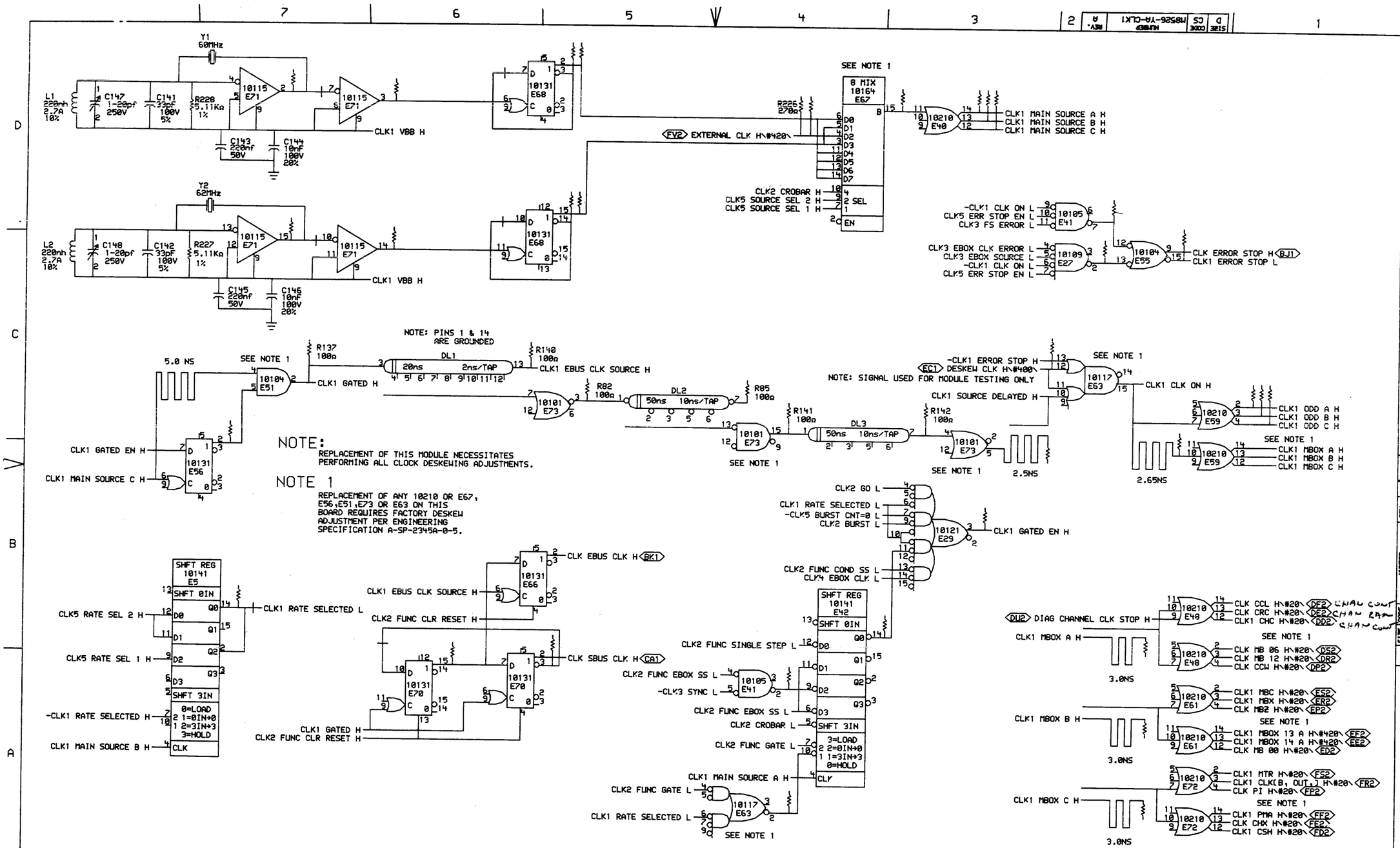

"THIS DRAWING AND SPECIFICATIONS, HEREIN, ARE THE PROPERTY OF DIGITAL EQUIPMENT CORPORATION AND SHALL NOT BE REPRODUCED OR COPIED OR USED IN WHOLE OR IN PART AS THE BASIS FOR THE MANUFACTURE OR SALE OF ITEMS WITHOUT WRITTEN PERMISSION. COPYRIGHT © 1977, DIGITAL EQUIPMENT CORPORATION"

REVISIONS		
CHK	CHANGE NO.	REV
—	M8526-YA-1	A
	27-MAY-77	
	W. BRUCKERT	

digital

DRN. B. Loomis
CHK'D.
DATE 11-APR-77 | ENG. | DATE 13-APR-77
DATE 13-APR-77 | BOARD LOCATION: 4AF32
SHEET 1 OF 1
CLK1EF.DRW[4,677] 08-APR-77 09:36 | NEXT HIGHER ASSEMBLY: B-DD-M8526-YA
FIRST USED ON OPTION/MODEL: KL10

TITLE: CLK CONTROL CLOCK CONTROL

SIZE	CODE	NUMBER	REV.
D	CS	M8526-YA-CLK1	A

MK 1

68

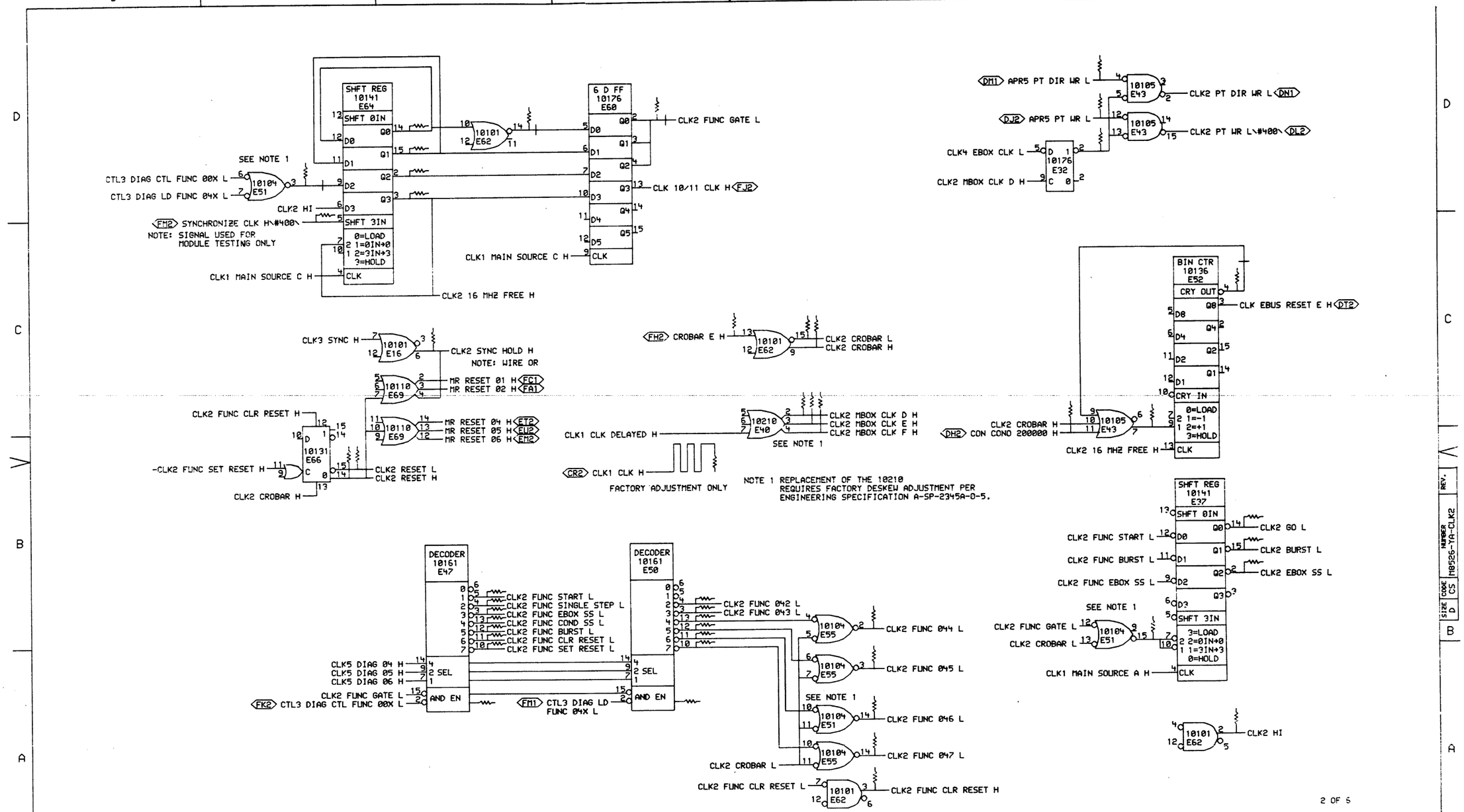

"THIS DRAWING AND SPECIFICATIONS, HEREIN, ARE THE PROPERTY OF DIGITAL EQUIPMENT CORPORATION AND SHALL NOT BE REPRODUCED OR COPIED OR USED IN WHOLE OR IN PART AS THE BASIS FOR THE MANUFACTURE OR SALE OF ITEMS WITHOUT WRITTEN PERMISSION. COPYRIGHT © 1977, DIGITAL EQUIPMENT CORPORATION"

REVISIONS		
CHK	CHANGE NO.	REV

digital

DRN. | DATE 25-FEB-77 | ENG. | DATE 25-FEB-77
CHK. | DATE 2/27/77 | BOARD LOCATION: 4AF32
CLK2EF.DRW[4,6773] 28-FEB-77 11:08 | SHEET 1 OF 1 | NEXT HIGHER ASSEMBLY:
FIRST USED ON OPTION/MODEL: KL10 | B-DD-M8526-YA

TITLE: CLK CONTROL DIAGNOSTIC CONTROL

SIZE	CODE	NUMBER	REV.
D	CS	M8526-YA-CLK2	

169

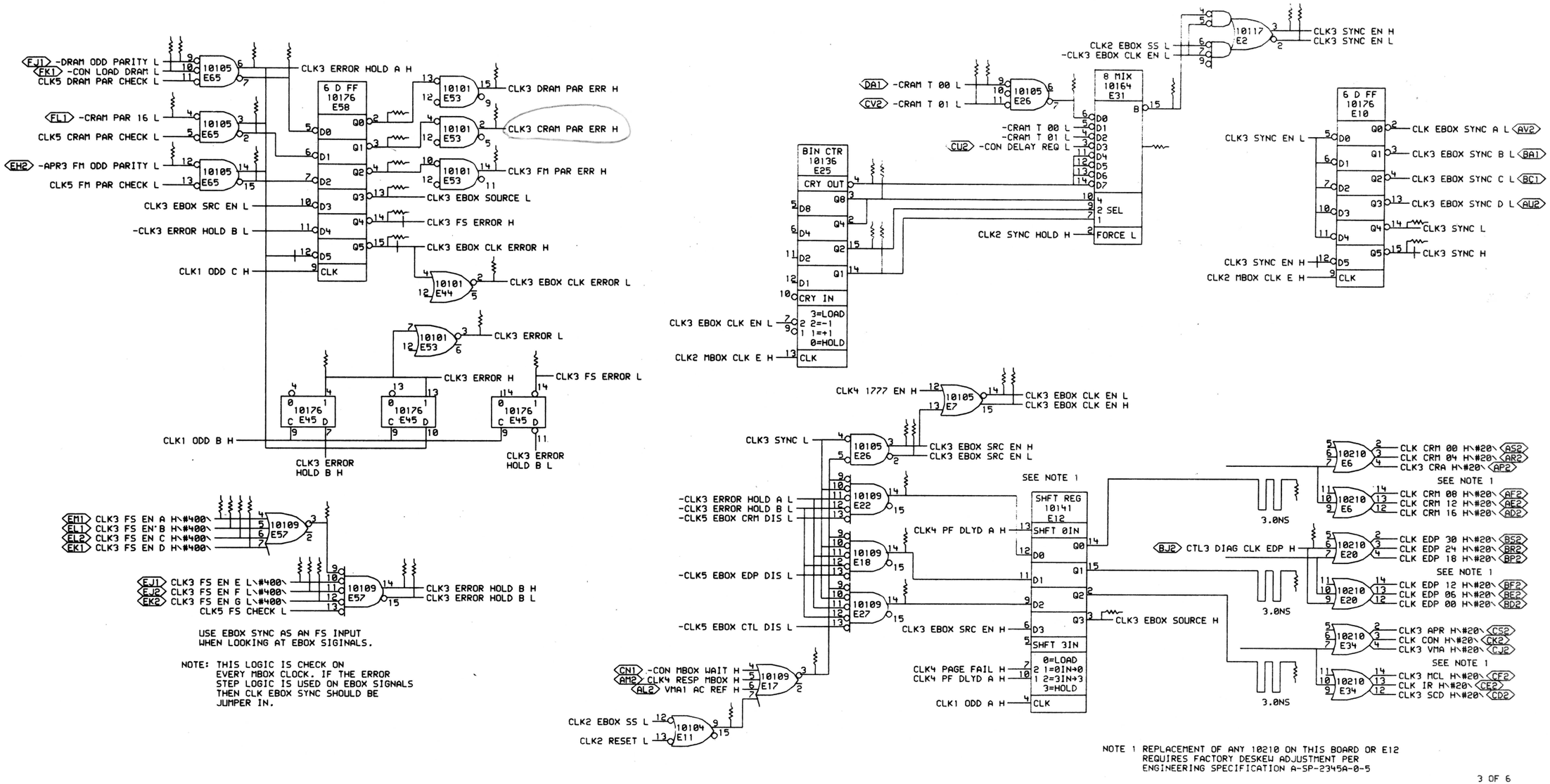

NOTE 1 REPLACEMENT OF ANY 10210 ON THIS BOARD OR E12
REQUIRES FACTORY DESKEW ADJUSTMENT PER
ENGINEERING SPECIFICATION A-SP-2345A-0-5

3 OF 6

"THIS DRAWING AND SPECIFICATIONS, HEREIN, ARE THE PROPERTY OF DIGITAL EQUIPMENT CORPORATION AND SHALL NOT BE REPRODUCED OR COPIED OR USED IN WHOLE OR IN PART AS THE BASIS FOR THE MANUFACTURE OR SALE OF ITEMS WITHOUT WRITTEN PERMISSION.
COPYRIGHT © 1977, DIGITAL EQUIPMENT CORPORATION"

REVISIONS		
CHK	CHANGE NO.	REV

digital

DRW. L. Loomis DATE 22-FEB-77 ENG. M. Bruchet DATE 19FEB77
CHK. B. Stephenson DATE 2/23/77 BOARD LOCATION: 4AF32
CLK3EF.DRW[4,557] 24-FEB-77 13:26 SHEET OF NEXT HIGHER ASSEMBLY:
FIRST USED ON OPTION/MODEL: KL10 B-DD-M8526-YA

TITLE: CLK CONTROL
EBOX CLK CONTROL

SIZE	CODE	NUMBER	REV.
D	CS	M8526-YA-CLK3	

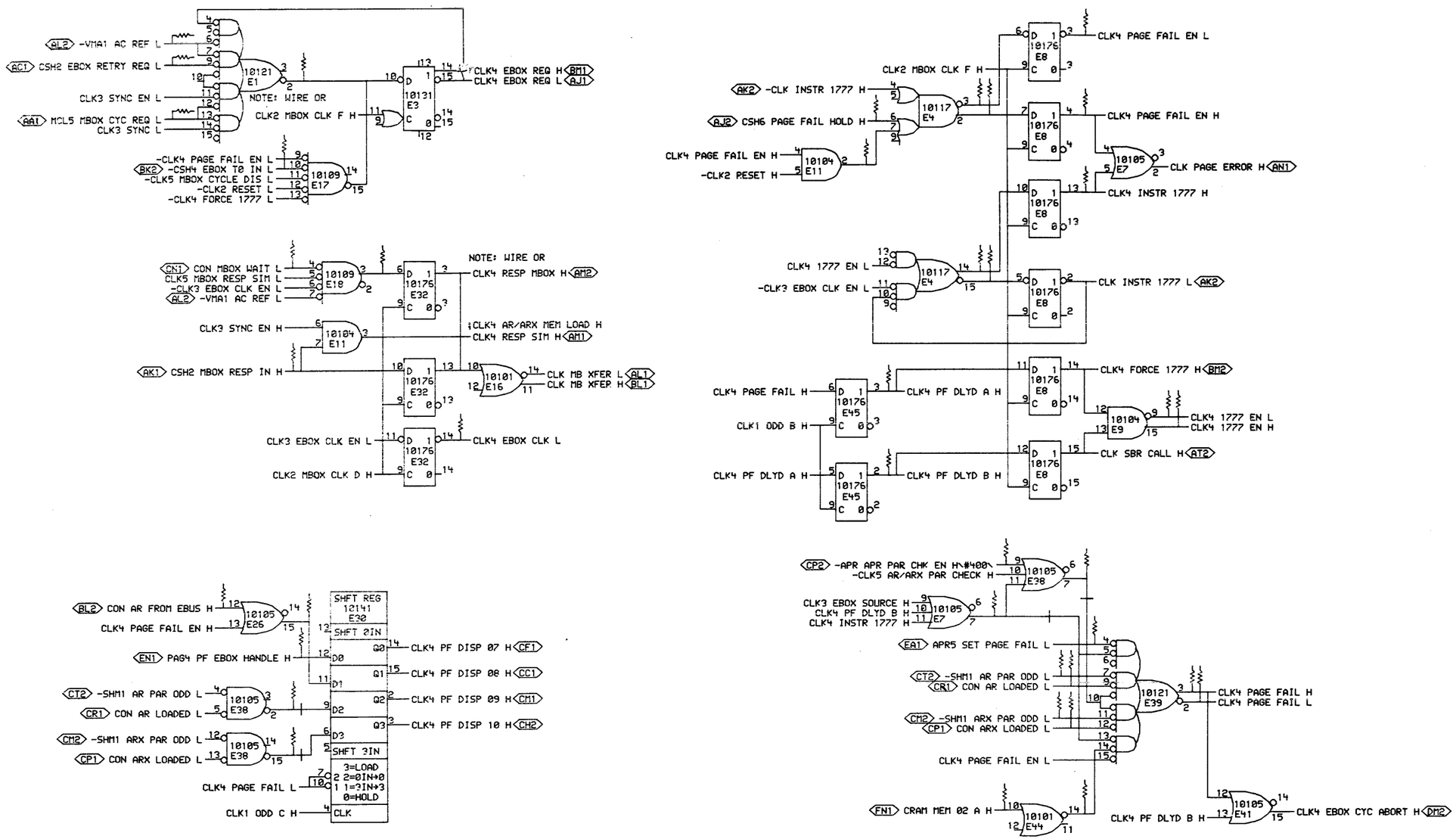

"THIS DRAWING AND SPECIFICATIONS, HEREIN, ARE THE PROPERTY OF DIGITAL EQUIPMENT CORPORATION AND SHALL NOT BE REPRODUCED OR COPIED OR USED IN WHOLE OR IN PART AS THE BASIS FOR THE MANUFACTURE OR SALE OF ITEMS WITHOUT WRITTEN PERMISSION. COPYRIGHT © 1977, DIGITAL EQUIPMENT CORPORATION"

REVISIONS		
CHK	CHANGE NO.	REV

digital

DRN. L. Loosby DATE 25-FEB-77 ENG. N. Gaudet DATE 24-FEB-77
CHK. D. Wiedman DATE 2/27/77 BOARD LOCATION: 4AF32
CLK4EF.DRW[4,677] 28-FEB-77 11:09 SHEET 1 OF 1
FIRST USED ON OPTION/MODEL: KL10 NEXT HIGHER ASSEMBLY: B-DD-M8526-YA

TITLE: CLK CONTROL PAGE FAIL LOGIC

SIZE	CODE	NUMBER	REV.
D	CS	M8526-YA-CLK4	

32

171

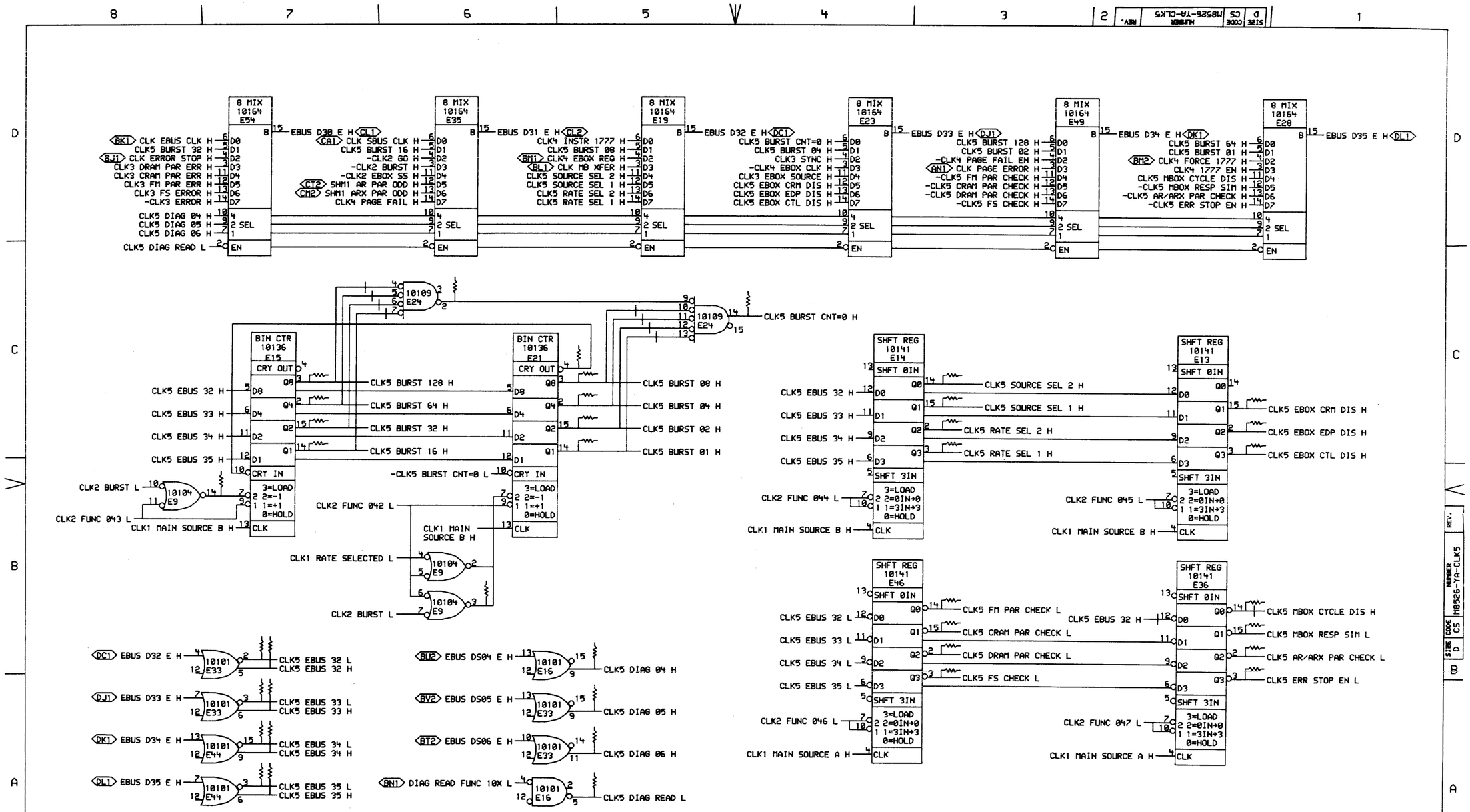

5 OF 6

"THIS DRAWING AND SPECIFICATIONS, HEREIN, ARE THE PROPERTY OF DIGITAL EQUIPMENT CORPORATION AND SHALL NOT BE REPRODUCED OR COPIED OR USED IN WHOLE OR IN PART AS THE BASIS FOR THE MANUFACTURE OR SALE OF ITEMS WITHOUT WRITTEN PERMISSION. COPYRIGHT © 1977, DIGITAL EQUIPMENT CORPORATION"

REVISIONS		
CHK	CHANGE NO.	REV

digital

DRN. J. Toomey DATE 22-FEB-77 ENG. A. Gauchat DATE 8/8/77
CHKD. J. Stephens DATE 2/23/77 BOARD LOCATION: 4AF32 SHEET 1 OF

CLK5EF.DRW[4,557] 14-FEB-77 20:38 NEXT HIGHER ASSEMBLY:
FIRST USED ON OPTION/MODEL: KL10 B-DD-M8526-YA

TITLE: CLK CONTROL DIAGNOSTICS

SIZE	CODE	NUMBER	REV.
D	CS	M8526-YA-CLK5	

MR 122

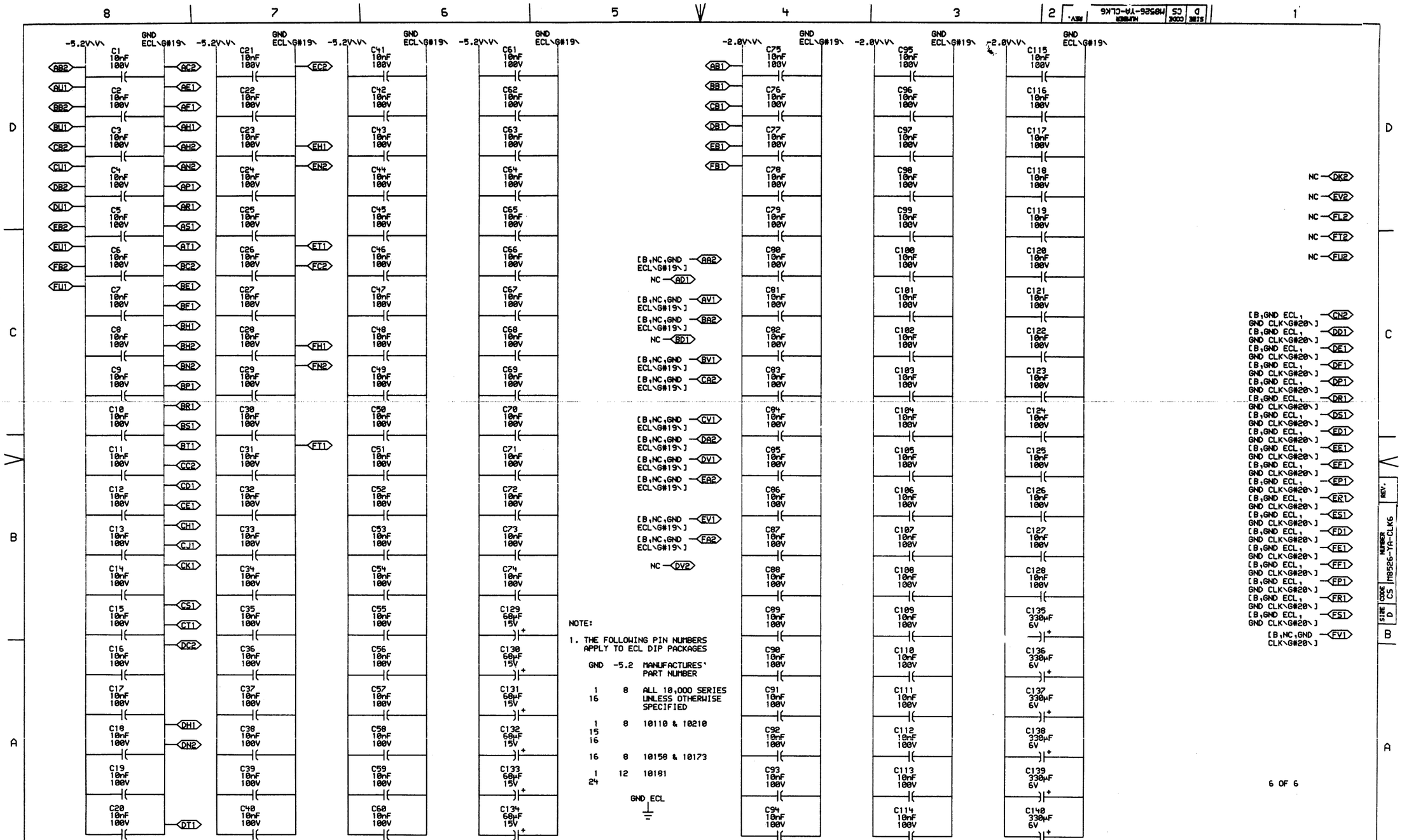

"THIS DRAWING AND SPECIFICATIONS, HEREIN, ARE THE PROPERTY OF DIGITAL EQUIPMENT CORPORATION AND SHALL NOT BE REPRODUCED OR COPIED OR USED IN WHOLE OR IN PART AS THE BASIS FOR THE MANUFACTURE OR SALE OF ITEMS WITHOUT WRITTEN PERMISSION.
COPYRIGHT © 1977, DIGITAL EQUIPMENT CORPORATION"

REVISIONS		
CHK	CHANGE NO.	REV

digital

DRW. R. Loosley DATE 22-FEB-77 ENG. M. Bruchet DATE 29/03/77
CHKD. J. Stephenson DATE 2/23/77 BOARD LOCATION: 4AF32 SHEET 1 OF 1
CLKSEF.DRW[4,557] 14-FEB-77 20:38 NEXT HIGHER ASSEMBLY:
FIRST USED ON OPTION/MODEL: KL10 B-DD-M8526-YA

TITLE: CLK CONTROL POWER, GND, CAPS

SIZE	CODE	NUMBER	REV.
D	CS	M8526-YA-CLK6	

RESISTOR LOC(PIN)	SHOWN ON DRW#	REF	VALUE	TERMINATES SIGNAL
P85(1)	CLK1	C4	100Ω	%DL2(7)
R142(1)	CLK1	C3	100Ω	%DL3(7)
R87(1)	CLK4	D7	68Ω	%E1(2)
R88(1)	CLK4	D4	68Ω	%E11(2)
R146(1)	CLK3	A5	68Ω	%E11(9)
R143(1)	CLK3	B2	68Ω	%E12(14)
R148(1)	CLK3	B2	68Ω	%E12(15)
R157(1)	CLK3	A2	68Ω	%E12(2)
R152(1)	CLK3	A4	68Ω	%E17(3)
R93(1)	CLK3	B4	68Ω	%E18(14)
R110(1)	CLK4	C6	68Ω	%E18(3)
R8(1)	CLK5	C5	68Ω	%E21(4)
R92(1)	CLK3	B4	68Ω	%E22(14)
R10(1)	CLK5	C6	68Ω	%E24(2)
R154(1)	CLK3	C4	68Ω	%E25(14)
R153(1)	CLK3	C4	68Ω	%E25(15)
R156(1)	CLK3	C4	68Ω	%E25(2)
R150(1)	CLK3	C4	68Ω	%E25(4)
R190(1)	CLK4	B7	68Ω	%E26(15)
R155(1)	CLK3	D3	68Ω	%E26(7)
R99(1)	CLK3	B4	68Ω	%E27(14)
R71(1)	CLK1	C2	68Ω	%E27(2)
R89(1)	CLK3	D2	68Ω	%E31(15)
R202(1)	CLK2	D2	68Ω	%E32(2)
R193(1)	CLK4	A7	68Ω	%E38(15)
R192(1)	CLK4	A7	68Ω	%E38(2)
R196(1)	CLK4	B3	68Ω	%E38(7)
R42(1)	CLK4	C3	68Ω	%E4(14)
R46(1)	CLK4	C3	68Ω	%E4(15)
R94(1)	CLK4	D3	68Ω	%E4(2)
R45(1)	CLK4	D3	68Ω	%E4(3)
R23(1)	CLK1	A4	68Ω	%E41(2)
R68(1)	CLK1	D2	68Ω	%E41(7)
R12(1)	CLK1	B3	68Ω	%E42(14)
R210(1)	CLK2	C2	68Ω	%E43(7)
R159(1)	CLK4	A3	68Ω	%E44(14)
R73(1)	CLK2	B5	68Ω	%E50(10)
R28(1)	CLK2	B5	68Ω	%E50(11)
R72(1)	CLK2	B5	68Ω	%E50(12)
R69(1)	CLK2	B5	68Ω	%E50(13)

RESISTOR LOC(PIN)	SHOWN ON DRW#	REF	VALUE	TERMINATES SIGNAL
R22(1)	CLK2	B2	68Ω	%E51(15)
R36(1)	CLK2	D7	68Ω	%E51(3)
R204(1)	CLK2	C2	68Ω	%E52(4)
R29(1)	CLK1	C7	68Ω	%E56(2)
R211(1)	CLK3	B7	68Ω	%E57(3)
R166(1)	CLK3	D6	68Ω	%E58(2)
R165(1)	CLK3	D6	68Ω	%E58(3)
R168(1)	CLK3	C6	68Ω	%E58(4)
R34(1)	CLK2	D6	68Ω	%E62(14)
R21(1)	CLK1	A4	68Ω	%E63(2)
R135(1)	CLK2	D6	68Ω	%E64(14)
R33(1)	CLK2	D6	68Ω	%E64(15)
R35(1)	CLK2	D6	68Ω	%E64(2)
R169(1)	CLK3	C7	68Ω	%E65(15)
R164(1)	CLK3	D7	68Ω	%E65(2)
R163(1)	CLK3	D7	68Ω	%E65(7)
R114(1)	CLK1	D3	68Ω	%E67(15)
R80(1)	CLK1	D5	68Ω	%E68(14)
R138(1)	CLK1	D5	68Ω	%E68(15)
R132(1)	CLK1	D5	68Ω	%E68(2)
R81(1)	CLK1	D5	68Ω	%E68(3)
R200(1)	CLK4	B3	68Ω	%E7(7)
R174(1)	CLK1	A6	68Ω	%E70(15)
R175(1)	CLK1	B5	68Ω	%E70(3)
R76(1)	CLK1	C6	68Ω	%E71(14)
R84(1)	CLK1	C7	68Ω	%E71(15)
R83(1)	CLK1	D7	68Ω	%E71(2)
R75(1)	CLK1	D6	68Ω	%E71(3)
R141(1)	CLK1	C4	100Ω	%E73(15)
R82(1)	CLK1	C5	100Ω	%E73(3)
R74(1)	CLK1	C3	68Ω	%E73(5)
R7(1)	CLK5	B7	68Ω	%E9(14)
R9(1)	CLK5	B6	68Ω	%E9(2)
R198(1)	CLK4	B3	68Ω	-APR APR PAR CHK EN H\#400\
R218(1)	CLK3	C7	68Ω	APR3 FM ODD PARITY H
R203(1)	CLK2	D2	68Ω	-APR5 PT DIR WR H
R201(1)	CLK2	D2	68Ω	-APR5 PT WR H
R160(1)	CLK4	B3	68Ω	-APR5 SET PAGE FAIL H
R113(1)	CLK2	B5	68Ω	CLK1 CLK H
R130(1)	CLK1	C2	68Ω	CLK1 CLK ON H

RESISTOR LOC(PIN)	SHOWN ON DRW#	REF	VALUE	TERMINATES SIGNAL
R140(1)	CLK1	C6	100Ω	CLK1 EBUS CLK SOURCE H
R77(1)	CLK1	C2	68Ω	-CLK1 ERROR STOP H
R137(1)	CLK1	C7	100Ω	CLK1 GATED H
R31(1)	CLK1	B3	68Ω	CLK1 GATED EN H
R18(1)	CLK1	D3	68Ω	CLK1 MAIN SOURCE A H
R2(1)	CLK1	D3	68Ω	CLK1 MAIN SOURCE B H
R30(1)	CLK1	D3	68Ω	CLK1 MAIN SOURCE C H
R162(1)	CLK1	B2	68Ω	CLK1 MBOX A H
R171(1)	CLK1	A2	68Ω	CLK1 MBOX B H
R176(1)	CLK1	A2	68Ω	CLK1 MBOX C H
R97(1)	CLK1	C1	68Ω	CLK1 ODD A H
R115(1)	CLK1	C1	68Ω	CLK1 ODD B H
R191(1)	CLK1	C1	68Ω	CLK1 ODD C H
R79(1)	CLK1	B7	68Ω	-CLK1 RATE SELECTED H
R209(1)	CLK2	D6	68Ω	CLK2 16 MHZ FREE H
R6(1)	CLK2	B2	68Ω	-CLK2 BURST H
R206(1)	CLK2	C4	68Ω	CLK2 CROBAR H
R25(1)	CLK2	C4	68Ω	-CLK2 CROBAR H
R90(1)	CLK2	B2	68Ω	-CLK2 EBOX SS H
R1(1)	CLK2	B5	68Ω	-CLK2 FUNC 042 H
R5(1)	CLK2	B5	68Ω	-CLK2 FUNC 043 H
R4(1)	CLK2	B4	68Ω	-CLK2 FUNC 044 H
R49(1)	CLK2	A4	68Ω	-CLK2 FUNC 045 H
R67(1)	CLK2	A4	68Ω	-CLK2 FUNC 046 H
R62(1)	CLK2	A4	68Ω	-CLK2 FUNC 047 H
R20(1)	CLK2	B6	68Ω	-CLK2 FUNC BURST H
R172(1)	CLK2	A4	68Ω	CLK2 FUNC CLR RESET H
R134(1)	CLK2	B6	68Ω	-CLK2 FUNC CLR RESET H
R14(1)	CLK2	B6	68Ω	-CLK2 FUNC COND SS H
R60(1)	CLK2	B6	68Ω	-CLK2 FUNC EBOX SS H
R26(1)	CLK2	D5	68Ω	-CLK2 FUNC GATE H
R173(1)	CLK2	B6	68Ω	-CLK2 FUNC SET RESET H
R24(1)	CLK2	B6	68Ω	-CLK2 FUNC SINGLE STEP H
R17(1)	CLK2	B6	68Ω	-CLK2 FUNC START H
R15(1)	CLK2	B2	68Ω	-CLK2 GO H
R37(1)	CLK2	A2	68Ω	CLK2 HI
R111(1)	CLK2	C4	68Ω	CLK2 MBOX CLK D H
R182(1)	CLK2	C4	68Ω	CLK2 MBOX CLK E H
R43(1)	CLK2	C4	68Ω	CLK2 MBOX CLK F H
R144(1)	CLK2	B7	68Ω	CLK2 RESET H

RESISTOR LOC(PIN)	SHOWN ON DRW#	REF	VALUE	TERMINATES SIGNAL
R178(1)	CLK2	B7	68Ω	-CLK2 RESET H
R225(1)	CLK2	C6	68Ω	CLK2 SYNC HOLD H
R124(1)	CLK3	D6	68Ω	CLK3 CRAM PAR ERR H
R127(1)	CLK3	D6	68Ω	CLK3 DRAM PAR ERR H
R105(1)	CLK3	C3	68Ω	CLK3 EBOX CLK EN H
R188(1)	CLK3	C3	68Ω	-CLK3 EBOX CLK EN H
R158(1)	CLK3	C6	68Ω	CLK3 EBOX CLK ERROR H
R108(1)	CLK3	C6	68Ω	-CLK3 EBOX CLK ERROR H
R53(1)	CLK3	B3	68Ω	CLK3 EBOX SOURCE H
R109(1)	CLK3	C6	68Ω	-CLK3 EBOX SOURCE H
R86(1)	CLK3	B4	68Ω	CLK3 EBOX SRC EN H
R170(1)	CLK3	B4	68Ω	-CLK3 EBOX SRC EN H
R167(1)	CLK3	C7	68Ω	CLK3 ERROR H
R122(1)	CLK3	C6	68Ω	-CLK3 ERROR H
R100(1)	CLK3	D7	68Ω	CLK3 ERROR HOLD A H
R95(1)	CLK3	B6	68Ω	CLK3 ERROR HOLD B H
R116(1)	CLK3	B6	68Ω	-CLK3 ERROR HOLD B H
R120(1)	CLK3	C6	68Ω	CLK3 FM PAR ERR H
R214(1)	CLK3	B7	68Ω	CLK3 FS EN A H\#400\
R215(1)	CLK3	B7	68Ω	CLK3 FS EN B H\#400\
R217(1)	CLK3	B7	68Ω	CLK3 FS EN C H\#400\
R216(1)	CLK3	B7	68Ω	CLK3 FS EN D H\#400\
R213(1)	CLK3	B7	68Ω	CLK3 FS EN E L\#400\
R212(1)	CLK3	B7	68Ω	CLK3 FS EN F L\#400\
R207(1)	CLK3	B7	68Ω	CLK3 FS EN G L\#400\
R121(1)	CLK3	C6	68Ω	CLK3 FS ERROR H
R64(1)	CLK3	C6	68Ω	-CLK3 FS ERROR H
R59(1)	CLK3	C1	68Ω	CLK3 SYNC H
R151(1)	CLK3	C1	68Ω	-CLK3 SYNC H
R177(1)	CLK3	D2	68Ω	CLK3 SYNC EN H
R181(1)	CLK3	D2	68Ω	-CLK3 SYNC EN H
R55(1)	CLK4	C2	68Ω	CLK4 1777 EN H
R40(1)	CLK4	C2	68Ω	-CLK4 1777 EN H
R11(1)	CLK4	C6	68Ω	-CLK4 EBOX CLK H
R51(1)	CLK4	D3	68Ω	CLK4 INSTR 1777 H
R98(1)	CLK4	A2	68Ω	CLK4 PAGE FAIL H
R194(1)	CLK4	A2	68Ω	-CLK4 PAGE FAIL H
R183(1)	CLK4	D3	68Ω	CLK4 PAGE FAIL EN H
R119(1)	CLK4	D3	68Ω	-CLK4 PAGE FAIL EN H
R38(1)	CLK4	C4	68Ω	CLK4 PF DLYD A H

NOTE:

1. ALL TERMINATORS HAVE PIN TWO CONNECTED TO -2.0V AND ARE 5% 1/4WATT UNLESS OTHERWISE SPECIFIED
2. ENTRIES ARE SORTED BY SIGNAL NAME
3. % INDICATES OUTPUT OF DIP LOC AND
   () INDICATES PIN NUMBER

"THIS DRAWING AND SPECIFICATIONS, HEREIN, ARE THE PROPERTY OF DIGITAL EQUIPMENT CORPORATION AND SHALL NOT BE REPRODUCED OR COPIED OR USED IN WHOLE OR IN PART AS THE BASIS FOR THE MANUFACTURE OR SALE OF ITEMS WITHOUT WRITTEN PERMISSION.
COPYRIGHT © 1977, DIGITAL EQUIPMENT CORPORATION"

REVISIONS		
CHK	CHANGE NO.	REV

digital

DRN. C Smith DATE 23-FEB-77 ENG. W Bruckert DATE 2-9-77
CHK'D DATE 3/25/77 BOARD LOCATION: SHEET 1 OF 2
F85261.DRW[4,557] 23-FEB-77 13:44 NEXT HIGHER ASSEMBLY: B-DD-M8526-YA
FIRST USED ON OPTION/MODEL: KL10

TITLE: CLK CONTROL TERMINATORS

SIZE	CODE	NUMBER	REV.
D	CS	M8526-YA-RES	

SIZE D CODE CS NUMBER M8526-YA-RES REV.

RESISTOR LOC(PIN)	SHOWN DRW#	ON REF	VALUE	TERMINATES SIGNAL
R91(1)	CLK4	B4	68Ω	CLK4 PF DLYD B H
R199(1)	CLK5	B2	68Ω	-CLK5 AR/ARX PAR CHECK H
R57(1)	CLK5	C5	68Ω	CLK5 BURST 01 H
R117(1)	CLK5	C5	68Ω	CLK5 BURST 02 H
R56(1)	CLK5	C5	68Ω	CLK5 BURST 04 H
R52(1)	CLK5	C5	68Ω	CLK5 BURST 08 H
R118(1)	CLK5	C7	68Ω	CLK5 BURST 128 H
R16(1)	CLK5	C7	68Ω	CLK5 BURST 16 H
R129(1)	CLK5	C7	68Ω	CLK5 BURST 32 H
R58(1)	CLK5	C7	68Ω	CLK5 BURST 64 H
R54(1)	CLK5	C4	68Ω	CLK5 BURST CNT=0 H
R219(1)	CLK5	B3	68Ω	-CLK5 CRAM PAR CHECK H
R125(1)	CLK5	B5	68Ω	CLK5 DIAG 04 H
R123(1)	CLK5	A5	68Ω	CLK5 DIAG 05 H
R120(1)	CLK5	A5	68Ω	CLK5 DIAG 06 H
R126(1)	CLK5	A5	68Ω	-CLK5 DIAG READ H
R222(1)	CLK5	B3	68Ω	-CLK5 DRAM PAR CHECK H
R101(1)	CLK5	C2	68Ω	CLK5 EBOX CRM DIS H
R107(1)	CLK5	C2	68Ω	CLK5 EBOX CTL DIS H
R96(1)	CLK5	C2	68Ω	CLK5 EBOX EDP DIS H
R44(1)	CLK5	B7	68Ω	CLK5 EBUS 32 H
R65(1)	CLK5	B7	68Ω	-CLK5 EBUS 32 H
R48(1)	CLK5	A7	68Ω	CLK5 EBUS 33 H
R66(1)	CLK5	A7	68Ω	-CLK5 EBUS 33 H
R47(1)	CLK5	A7	68Ω	CLK5 EBUS 34 H
R63(1)	CLK5	A7	68Ω	-CLK5 EBUS 34 H
R50(1)	CLK5	A7	68Ω	CLK5 EBUS 35 H
R61(1)	CLK5	A7	68Ω	-CLK5 EBUS 35 H
R106(1)	CLK5	B2	68Ω	-CLK5 ERR STOP EN H
R221(1)	CLK5	B3	68Ω	-CLK5 FM PAR CHECK H
R200(1)	CLK5	B3	68Ω	-CLK5 FS CHECK H
R145(1)	CLK5	B2	68Ω	CLK5 MBOX CYCLE DIS H
R103(1)	CLK5	B2	68Ω	-CLK5 MBOX RESP SIM H
R39(1)	CLK5	C3	68Ω	CLK5 RATE SEL 1 H
R3(1)	CLK5	C3	68Ω	CLK5 RATE SEL 2 H
R139(1)	CLK5	C3	68Ω	CLK5 SOURCE SEL 1 H
R136(1)	CLK5	C3	68Ω	CLK5 SOURCE SEL 2 H
R187(1)	CLK4	B7	68Ω	CON AR FROM EBUS H
R197(1)	CLK4	B3	68Ω	-CON AR LOADED H
R195(1)	CLK4	A3	68Ω	-CON ARX LOADED H

RESISTOR LOC(PIN)	SHOWN DRW#	ON REF	VALUE	TERMINATES SIGNAL
R205(1)	CLK2	C3	68Ω	CON CONO 200000 H
R149(1)	CLK3	D3	68Ω	CON DELAY REQ H
R224(1)	CLK3	D8	68Ω	CON LOAD DRAM H
R102(1)	CLK4	C7	68Ω	-CON MBOX WAIT H
R161(1)	CLK4	A3	68Ω	CRAM MEM 02 A H
R220(1)	CLK3	D7	68Ω	CRAM PAR 16 H
R185(1)	CLK3	D3	68Ω	CRAM T 00 H
R184(1)	CLK3	D3	68Ω	CRAM T 01 H
R133(1)	CLK2	C4	68Ω	CROBAR E H
R180(1)	CLK4	D7	68Ω	-CSH2 EBOX RETRY REQ H
R112(1)	CLK4	C7	68Ω	CSH2 MBOX RESP IN H
R147(1)	CLK4	D7	68Ω	CSH4 EBOX T0 IN H
R41(1)	CLK4	D4	68Ω	CSH6 PAGE FAIL HOLD H
R186(1)	CLK3	B2	68Ω	CTL3 DIAG CLK EDP H
R27(1)	CLK2	A6	68Ω	-CTL3 DIAG CTL FUNC 00X H
R70(1)	CLK2	A5	68Ω	-CTL3 DIAG LD FUNC 04X H
R78(1)	CLK1	C3	68Ω	DESKEW CLK H\#400\
R223(1)	CLK3	D7	68Ω	DRAM ODD PARITY H
R131(1)	CLK1	D4	68Ω	EXTERNAL CLK H\#420\
R226(1)	CLK1	D4	270Ω	EXTERNAL CLK H\#420\
R179(1)	CLK4	D7	68Ω	-MCL5 MBOX CYC REQ H
R189(1)	CLK4	B7	68Ω	PAG4 PF EBOX HANDLE H
R13(1)	CLK4	B3	68Ω	SHM1 AR PAR ODD H
R19(1)	CLK4	A3	68Ω	SHM1 ARX PAR ODD H
R32(1)	CLK2	D7	68Ω	SYNCHRONIZE CLK H\#400\
R104(1)	CLK4	D7	68Ω	VMA1 AC REF H

NOTE:

1. ALL TERMINATORS HAVE PIN TWO CONNECTED TO -2.0V AND ARE 5% 1/4WATT UNLESS OTHERWISE SPECIFIED
2. ENTRIES ARE SORTED BY SIGNAL NAME
3. % INDICATES OUTPUT OF DIP LOC AND () INDICATES PIN NUMBER

"THIS DRAWING AND SPECIFICATIONS, HEREIN, ARE THE PROPERTY OF DIGITAL EQUIPMENT CORPORATION AND SHALL NOT BE REPRODUCED OR COPIED OR USED IN WHOLE OR IN PART AS THE BASIS FOR THE MANUFACTURE OR SALE OF ITEMS WITHOUT WRITTEN PERMISSION. COPYRIGHT © 1977, DIGITAL EQUIPMENT CORPORATION"

REVISIONS		
CHK	CHANGE NO.	REV

digital

DRN. C Smith DATE 23-FEB-77 ENG. W. Gaudet DATE 2/28/77
CHK. DATE 2/28/77 BOARD LOCATION: SHEET 2 OF 2
F85262.DRW[4,557] 23-FEB-77 14:19 NEXT HIGHER ASSEMBLY: B-DD-M8526-YA
FIRST USED ON OPTION/MODEL: KL10

TITLE: CLK CONTROL TERMINATOR

SIZE	CODE	NUMBER
D	CS	M8526-YA-RES

MR

175

SIZE	CODE	NUMBER	REV.
B	DD	M8529-YA	

DRAWING NO.	NO. OF SHTS	PART NO.	DESCRIPTION	REVISIONS
			MODULE REVISION	A
D-UA-M8529-YA-Ø	5		MBOX CONTROL LOGIC	-
D-CS-M8529-YA-MBX1	1		CCA CTL, CSH FORCE MATCH & WD VAL	-
D-CS-M8529-YA-MBX2	1		MB SEL CTL, CSH TO MB WD RQ IN	-
D-CS-M8529-YA-MBX3	1		SBUS DIAG CTL, MB PAR, CTOMB RQ	-
D-CS-M8529-YA-MBX4	1		CACHE TO MB T(N), CSH WR WD EN	-
D-CS-M8529-YA-MBX5	1		CSH DIR PAR ERR, MEM RQ IN	-
D-CS-M8529-YA-MBX6	1		MB HOLD CTL, CORE DAT VAL, D-MIX	-
D-CS-M8529-YA-MBX7	1		MBOX CONTROL LOGIC PWR, GND, CAPS	-
D-CS-M8529-YA-RES	2		MBOX CONTROL TERMINATORS	-
D-AH-M8529-Ø-Ø	4		MBOX CONTROL LOGIC	C
		5010698	ETCHED CIRCUIT BOARD	C
M8529-Ø-L	-		P.C. DESIGN DATA BASE	REF
M8529-YA-PL	-		INSERTION P/L DATA BASE	REF
POO-M8529-YA	-		PROCESS SHEETS	REF

NOTES:

REVISIONS	
REV.	X
CHG NO.	ORIG
DATE	X

"THIS DRAWING AND SPECIFICATIONS, HEREIN, ARE THE PROPERTY OF DIGITAL EQUIPMENT CORPORATION AND SHALL NOT BE REPRODUCED OR COPIED OR USED IN WHOLE OR IN PART AS THE BASIS FOR THE MANUFACTURE OR SALE OF ITEMS WITHOUT WRITTEN PERMISSION.
COPYRIGHT ©1976, DIGITAL EQUIPMENT CORPORATION"

digital

USED ON OPTION/MODEL
KL10-DA,DB
KL10-EA,EB
KL10-PV

DRN.	RW Carrington	19OCT76
CHK'D	M R Cheanlt	20OCT76
ENG.	J. D. Allen	8DEC76
PROD.	W. Easley	8DEC76

TITLE: MBOX CONTROL LOGIC

SIZE	CODE	NUMBER	REV.
B	DD	M8529-YA	

SHEET 1 OF 1

DRB 126 EN-01149-16-N176(325)

MR 176

THIS DRAWING AND SPECIFICATIONS, HEREIN, ARE THE PROPERTY OF DIGITAL EQUIPMENT CORPORATION AND SHALL NOT BE REPRODUCED OR COPIED OR USED IN WHOLE OR IN PART AS THE BASIS FOR THE MANUFACTURE OR SALE OF ITEMS WITHOUT WRITTEN PERMISSION.
COPYRIGHT © 1976 DIGITAL EQUIPMENT CORPORATION

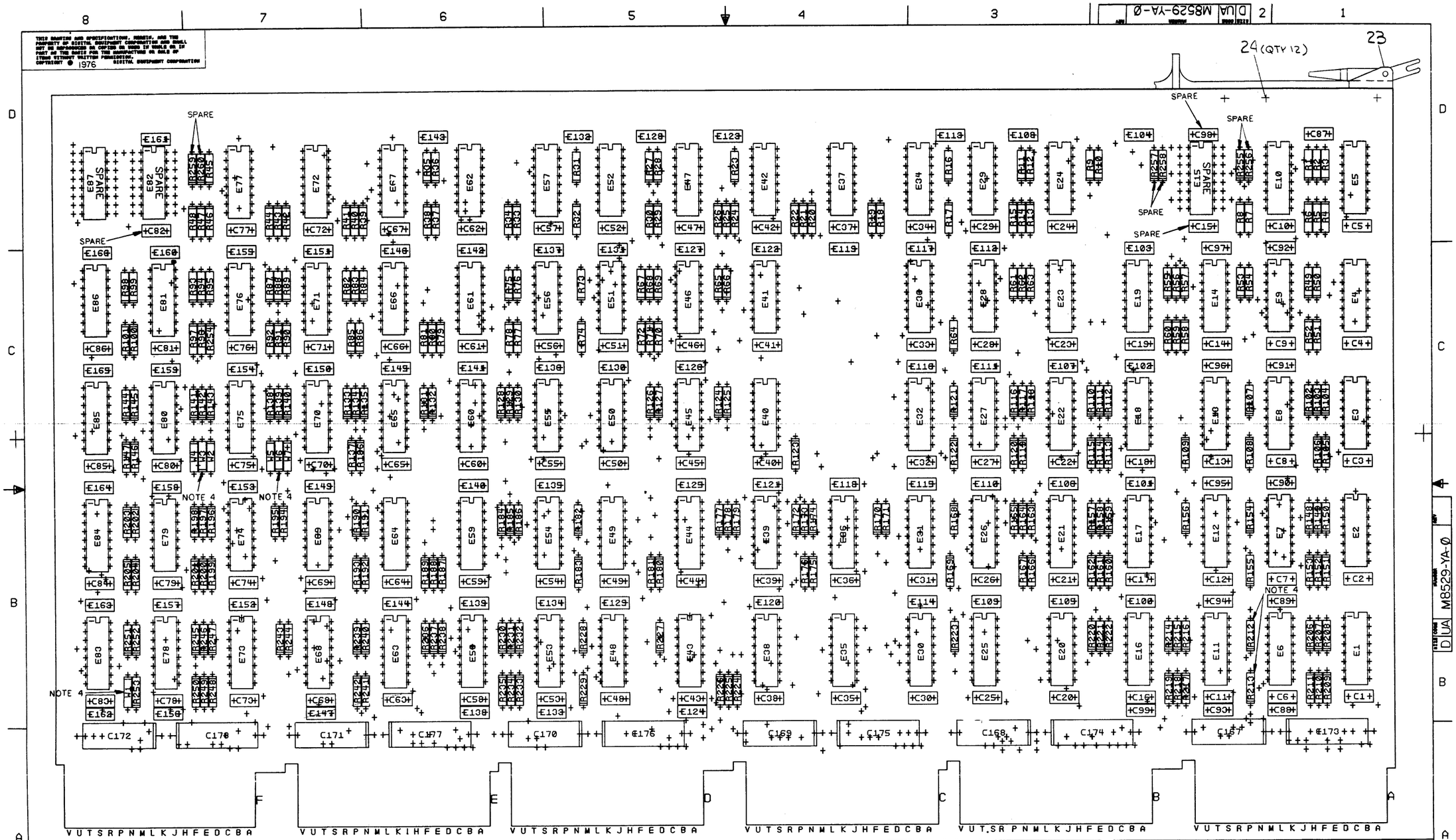

NOTES:

CHK	CHANGE NO	REV

SIGNATURES	DATE
DRN. R.W. Carpenter	1 APR 76
CHK'D.	14 OCT 76
ENG.	6 DEC 76
PROJ.ENG.	6 DEC 76
PROD. W. Emery	6 DEC 76
SCALE 2/1	
SHT. 2 OF 5	
NEXT HIGHER ASSY. B-DD-M8529-YA	

ETCH REV. C
P.C. DESIGN DATA BASE REV. C

digital

TITLE MBOX CONTROL LOGIC

SIZE	CODE	NUMBER	REV
D	UA	M8529-YA-0	

MR 1 MS#

177

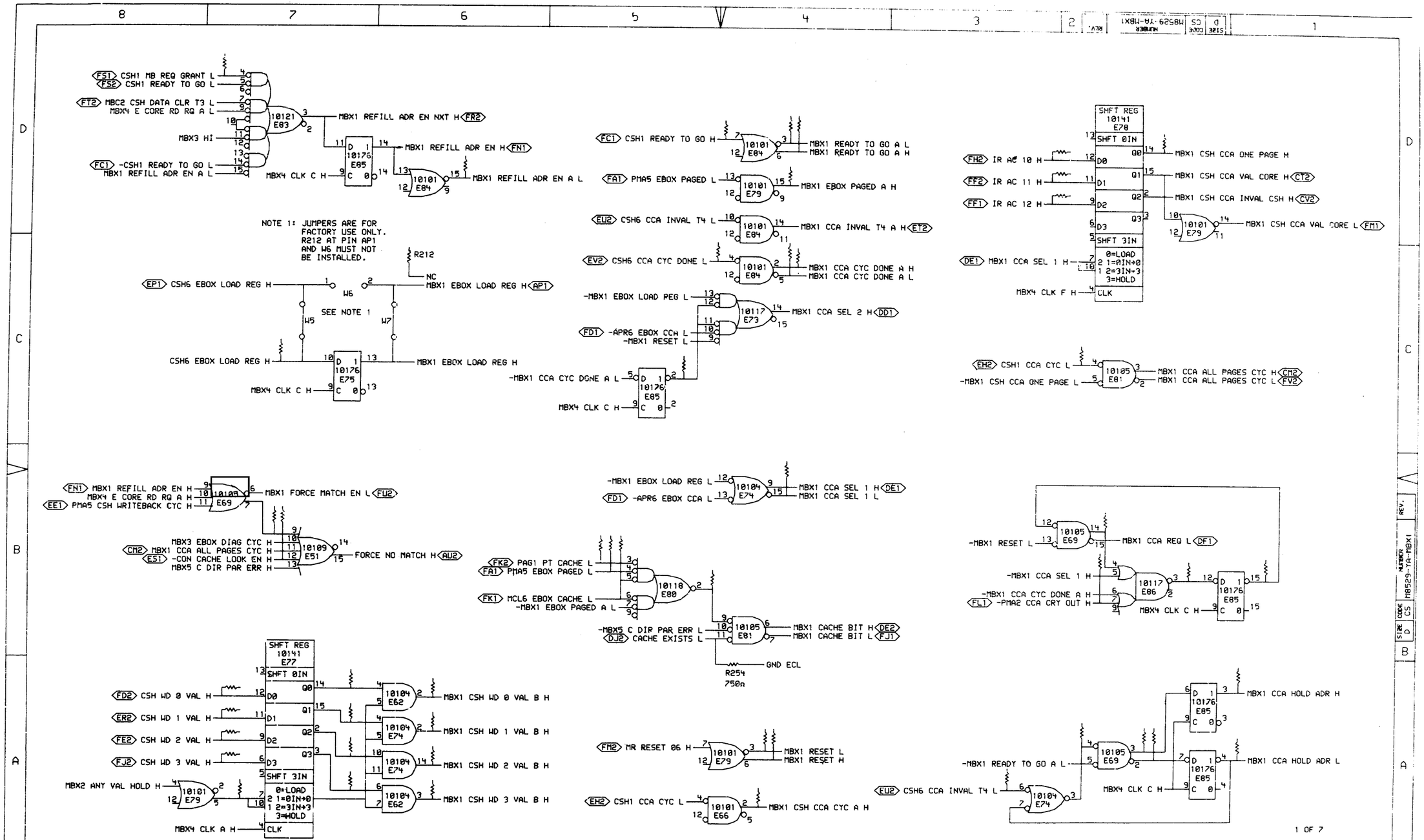

"THIS DRAWING AND SPECIFICATIONS, HEREIN, ARE THE PROPERTY OF DIGITAL EQUIPMENT CORPORATION AND SHALL NOT BE REPRODUCED OR COPIED OR USED IN WHOLE OR IN PART AS THE BASIS FOR THE MANUFACTURE OR SALE OF ITEMS WITHOUT WRITTEN PERMISSION. COPYRIGHT © 1976, DIGITAL EQUIPMENT CORPORATION"

REVISIONS		
CHK	CHANGE NO.	REV

digital

DRN. J. Farley DATE 18-NOV-76 ENG. J.D. Allen DATE 23 Nov 76

CHK R. Fisher DATE 11/18/76 BOARD LOCATION: 4AF21 SHEET 1 OF

MBX1EF.DRW[4,175] 18-NOV-76 22:16 NEXT HIGHER ASSEMBLY:

FIRST USED ON OPTION/MODEL: KL10 B-DD-M8529-YA

TITLE: CCA CTL, CSH FORCE MATCH & WD VAL

SIZE	CODE	NUMBER	REV.
D	CS	M8529-YA-MBX1	

SIZE D CODE CS NUMBER M8529-YA-MBX1 REV.

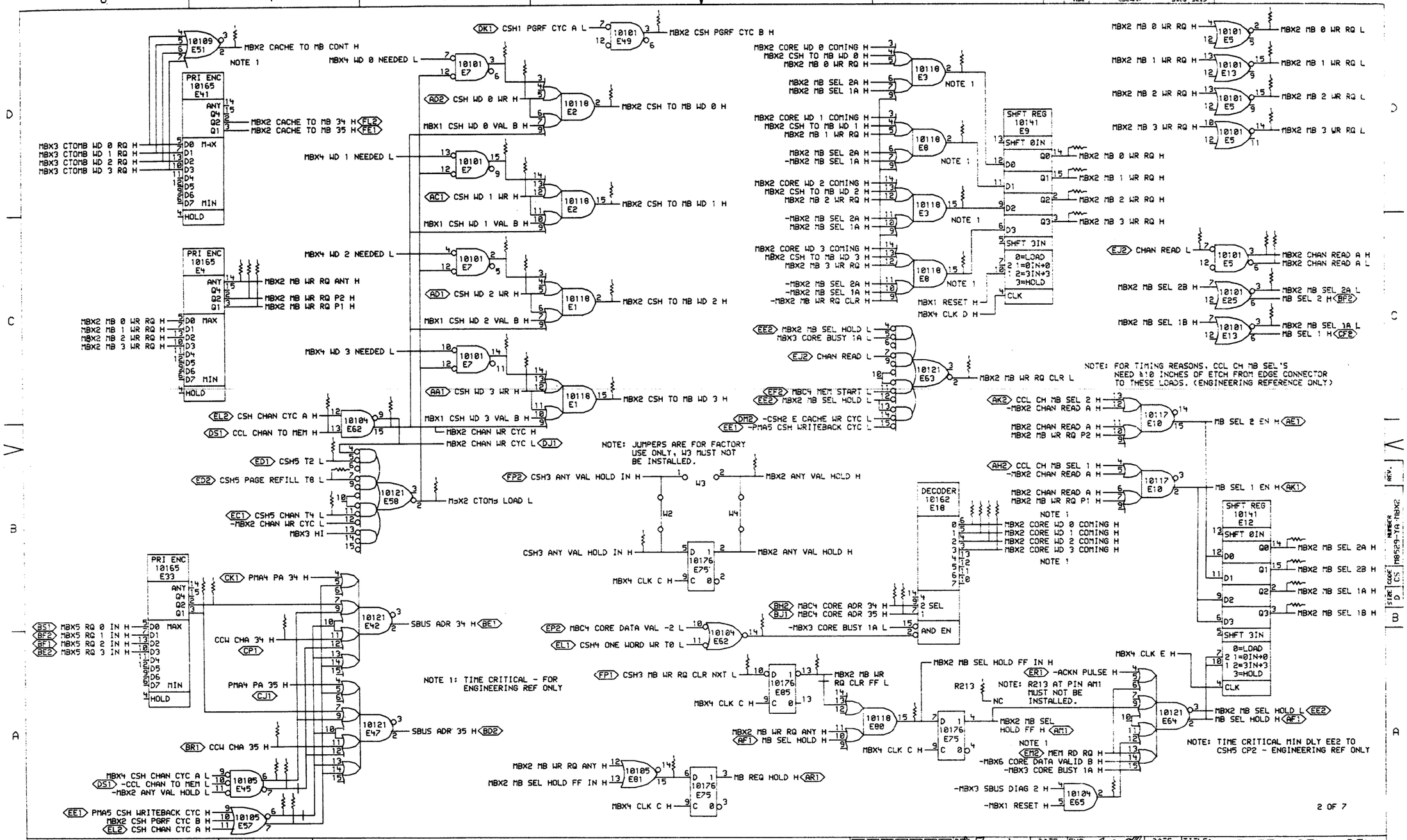

"THIS DRAWING AND SPECIFICATIONS, HEREIN, ARE THE PROPERTY OF DIGITAL EQUIPMENT CORPORATION AND SHALL NOT BE REPRODUCED OR COPIED OR USED IN WHOLE OR IN PART AS THE BASIS FOR THE MANUFACTURE OR SALE OF ITEMS WITHOUT WRITTEN PERMISSION.
COPYRIGHT © 1976, DIGITAL EQUIPMENT CORPORATION"

REVISIONS		
CHK	CHANGE NO.	REV

DRN. J. Toomey — DATE 18-NOV-76 — ENG. J.D. Allen — DATE 23 Nov 76
CHK — DATE — BOARD LOCATION: 4AF21
MBX2EF.DRW;4,1751 — 16-NOV-76 22:42 — SHEET — OF — NEXT HIGHER ASSEMBLY:
FIRST USED ON OPTION/MODEL: KL10 — B-DD-M8529-YA

TITLE: MB SEL CTL, CSH TO MB WD RQ IN

SIZE	CODE	NUMBER	REV
D	CS	M8529-YA-MBX2	

179

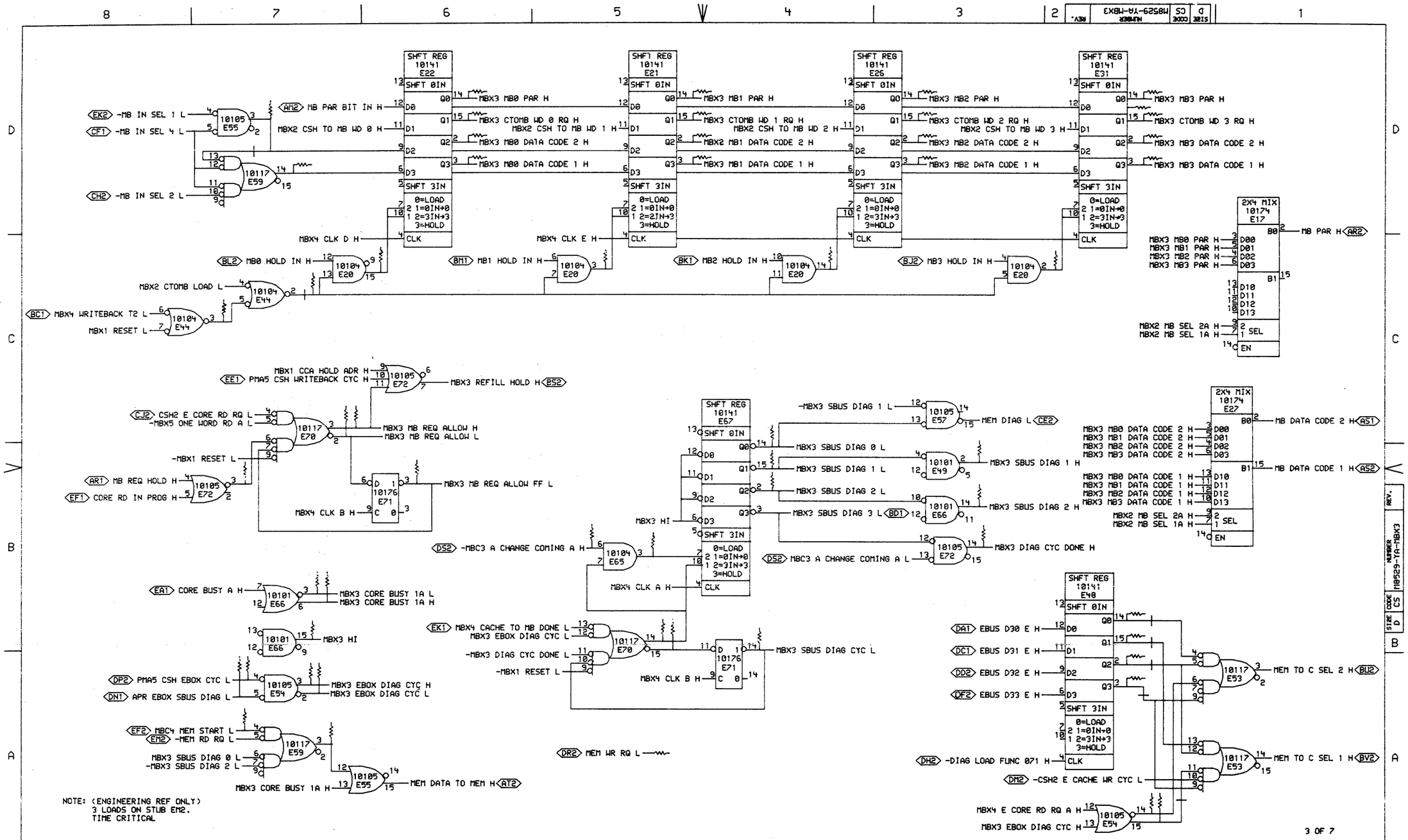

NOTE: (ENGINEERING REF ONLY)
3 LOADS ON STUB EM2.
TIME CRITICAL

"THIS DRAWING AND SPECIFICATIONS, HEREIN, ARE THE PROPERTY OF DIGITAL EQUIPMENT CORPORATION AND SHALL NOT BE REPRODUCED OR COPIED OR USED IN WHOLE OR IN PART AS THE BASIS FOR THE MANUFACTURE OR SALE OF ITEMS WITHOUT WRITTEN PERMISSION. COPYRIGHT © 1976, DIGITAL EQUIPMENT CORPORATION"

REVISIONS		
CHK	CHANGE NO.	REV

digital

DRW. [illegible] DATE 17-NOV-76 | ENG. [illegible] DATE 23 Nov 76 | TITLE: SBUS DIAG CTL, MB PAR, CTOMB RQ

CHK. [illegible] DATE 17/10/76 | BOARD LOCATION: 4AF21 | SHEET 1 OF 1

MBX3EF.DPW[4,175] 17-NOV-76 12:44 | NEXT HIGHER ASSEMBLY:

FIRST USED ON OPTION/MODEL: KL10 | B-DD-M8529-YA | SIZE D | CODE CS | NUMBER M8529-YA-MBX3 | REV.

180

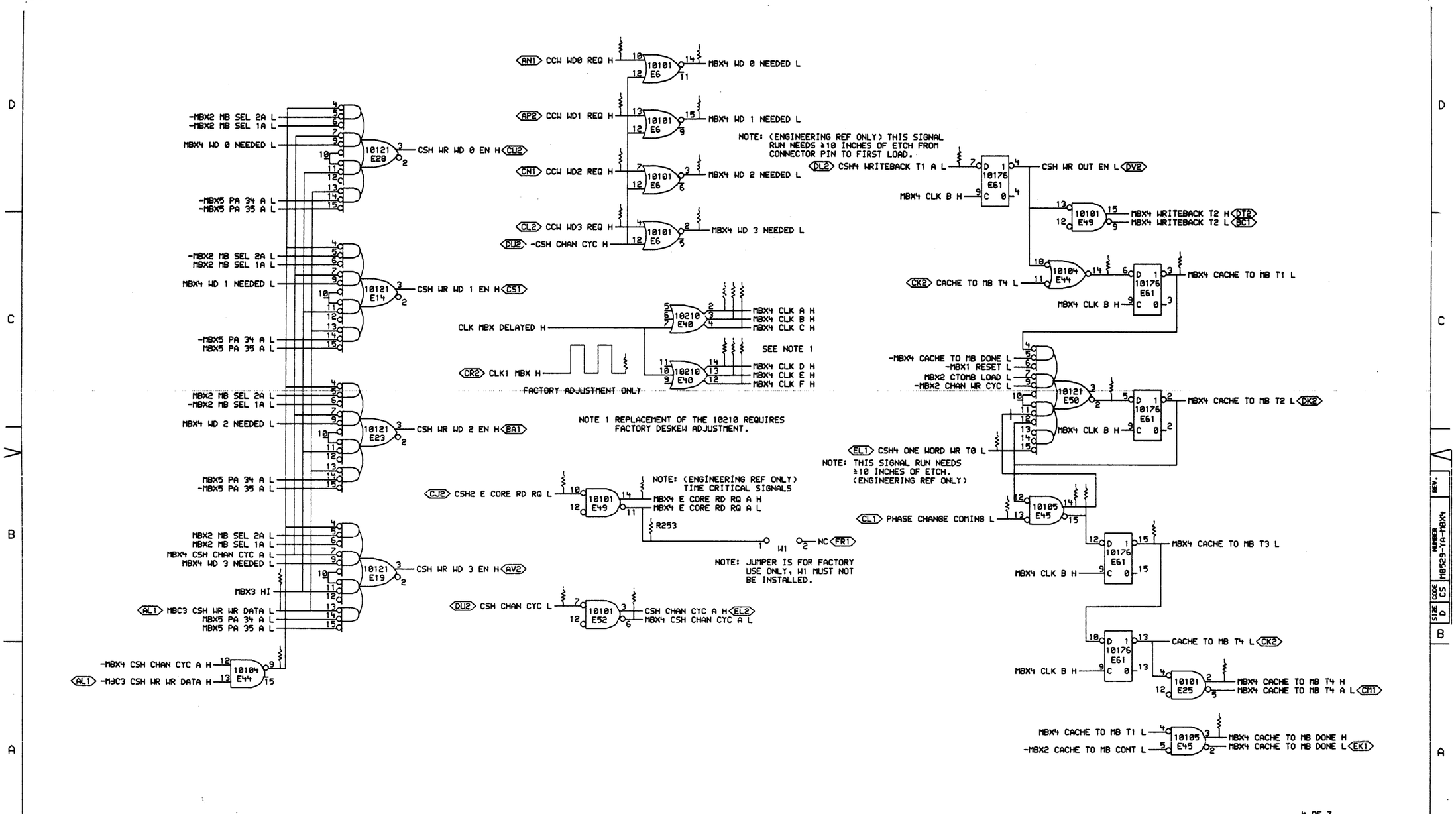

4 OF 7

"THIS DRAWING AND SPECIFICATIONS, HEREIN, ARE THE PROPERTY OF DIGITAL EQUIPMENT CORPORATION AND SHALL NOT BE REPRODUCED OR COPIED OR USED IN WHOLE OR IN PART AS THE BASIS FOR THE MANUFACTURE OR SALE OF ITEMS WITHOUT WRITTEN PERMISSION. COPYRIGHT © 1976, DIGITAL EQUIPMENT CORPORATION"

REVISIONS		
CHK	CHANGE NO.	REV

digital

DRN. J. Loosley DATE 17-NOV-76 ENG. J. D. Allen DATE 23 Nov 76
CHK. W. Stephenson DATE 11/29/76 BOARD LOCATION: 4AE21
MBX4EF.DRW[4,175] 17-NOV-76 13:50 SHEET 1 OF 1
FIRST USED ON OPTION/MODEL: KL10 NEXT HIGHER ASSEMBLY: B-DD-M8529-YA

TITLE: CACHE TO MB T(N), CSH WR WD EN

SIZE	CODE	NUMBER	REV.
D	CS	M8529-YA-MBX4	

DECEN30, MBX4EF.DRL[4,175], SCALE 2, "D" RELEASE BOX

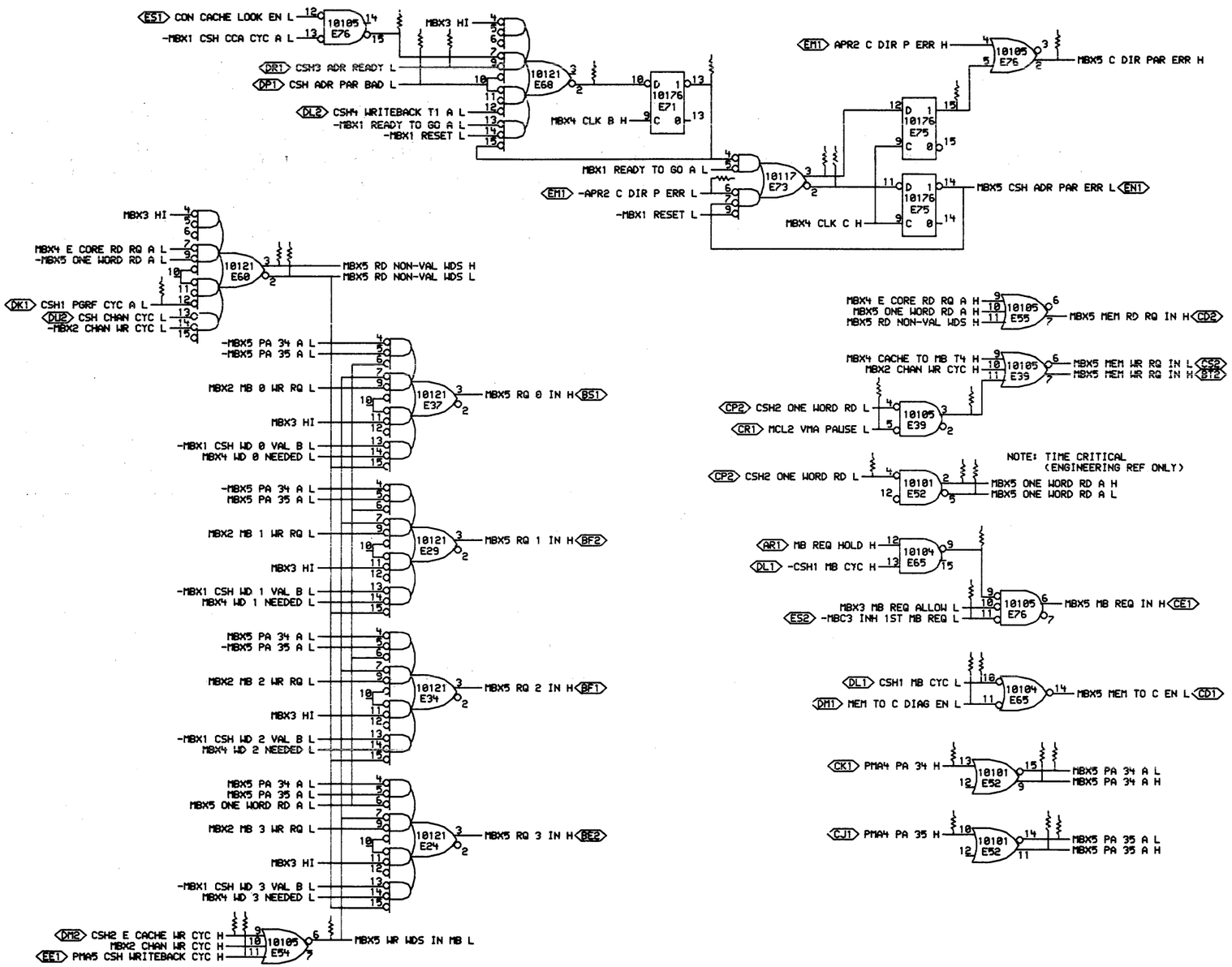

5 OF 7

"THIS DRAWING AND SPECIFICATIONS, HEREIN, ARE THE PROPERTY OF DIGITAL EQUIPMENT CORPORATION AND SHALL NOT BE REPRODUCED OR COPIED OR USED IN WHOLE OR IN PART ; AS THE BASIS FOR THE MANUFACTURE OR SALE OF ITEMS WITHOUT WRITTEN PERMISSION.
COPYRIGHT © 1976, DIGITAL EQUIPMENT CORPORATION"

REVISIONS		
CHK	CHANGE NO.	REV

digital

DRN. DATE 17-NOV-76 ENG. DATE 23 Nov 76
CHK DATE 11/18/76 BOARD LOCATION: 4AF21
MBX5EF.DPK 4,1753 17-NOV-76 11:53 SHEET 1 OF 1
FIRST USED ON OPTION/MODEL: KL10 NEXT HIGHER ASSEMBLY: B-DD-M8529-YA

TITLE: CSH DIR PAR ERR, MEM RQ IN

SIZE	CODE	NUMBER	REV.
D	CS	M8529-YA-MBX5	

MR

102

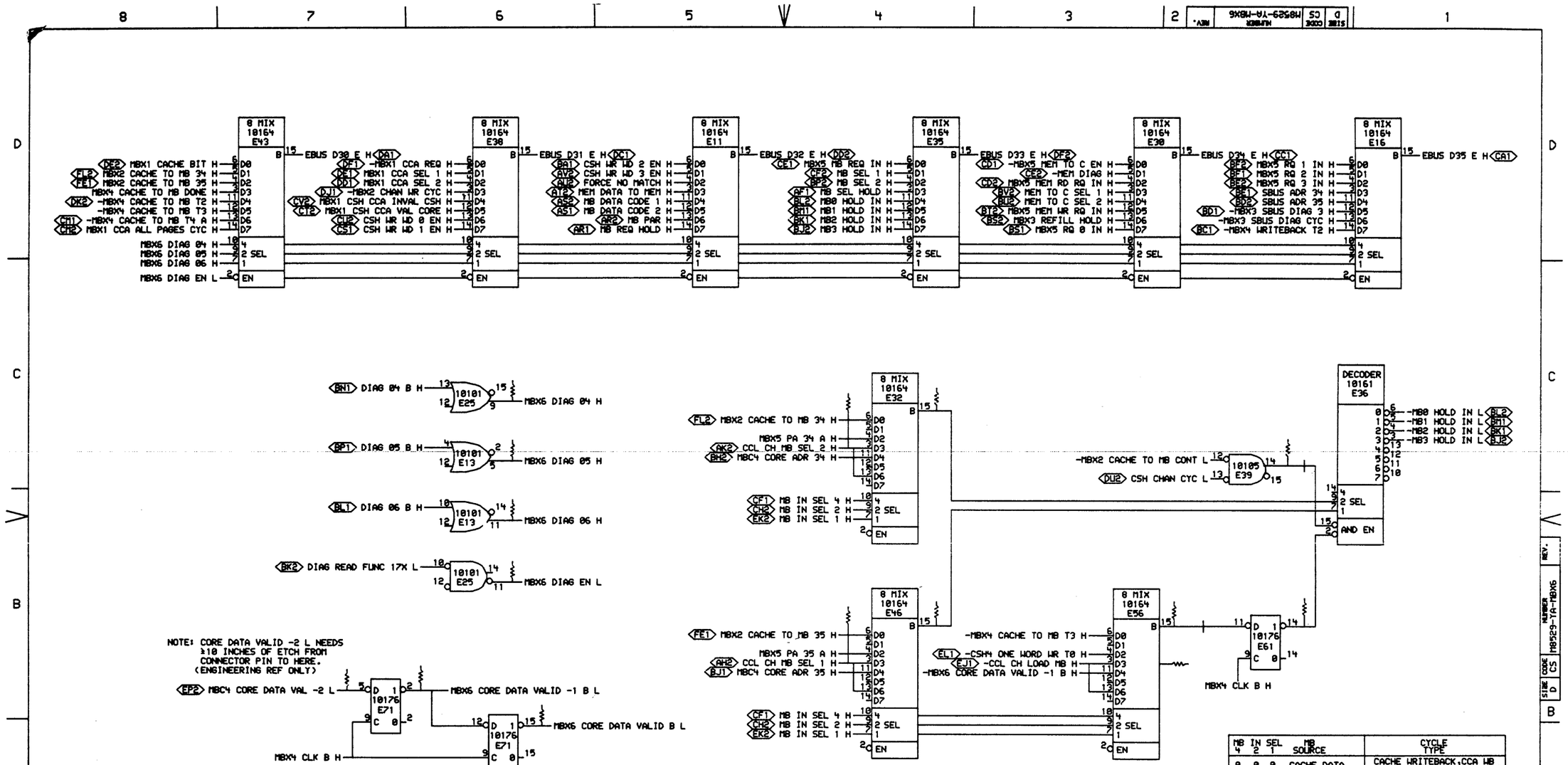

MB IN SEL 4	2	1	MB SOURCE	CYCLE TYPE
0	0	0	CACHE DATA	CACHE WRITEBACK,CCA WB PAGE REFILL,CHAN MEM RD
0	1	0	AR	EBOX WR,SBUS DIAG
0	1	1	CHAN DATA BUF	CHANNEL DATA TO MEM
1	0	0	MEM DATA	MEM READ
1	1	0	CCW MIX	CHANNEL STORE STATUS

6 OF 7

"THIS DRAWING AND SPECIFICATIONS, HEREIN, ARE THE PROPERTY OF DIGITAL EQUIPMENT CORPORATION AND SHALL NOT BE REPRODUCED OR COPIED OR USED IN WHOLE OR IN PART AS THE BASIS FOR THE MANUFACTURE OR SALE OF ITEMS WITHOUT WRITTEN PERMISSION.
COPYRIGHT © 1976, DIGITAL EQUIPMENT CORPORATION"

REVISIONS		
CHK	CHANGE NO.	REV

digital

DRN. L. Looney DATE 17-NOV-76
CHK. B. Hughes DATE 17/18/76
ENG. J. D. Allen DATE 22 Nov 76
BOARD LOCATION: 4AF21
SHEET 1 OF 1
MBXSEF.DRW[4,175] 17-NOV-76 12:41
FIRST USED ON OPTION/MODEL: KL10
NEXT HIGHER ASSEMBLY: B-DD-M8529-YA

TITLE: MB HOLD CTL, CORE DAT VAL, D-MIX

SIZE	CODE	NUMBER	REV.
D	CS	M8529-YA-MBX6	

183

MP

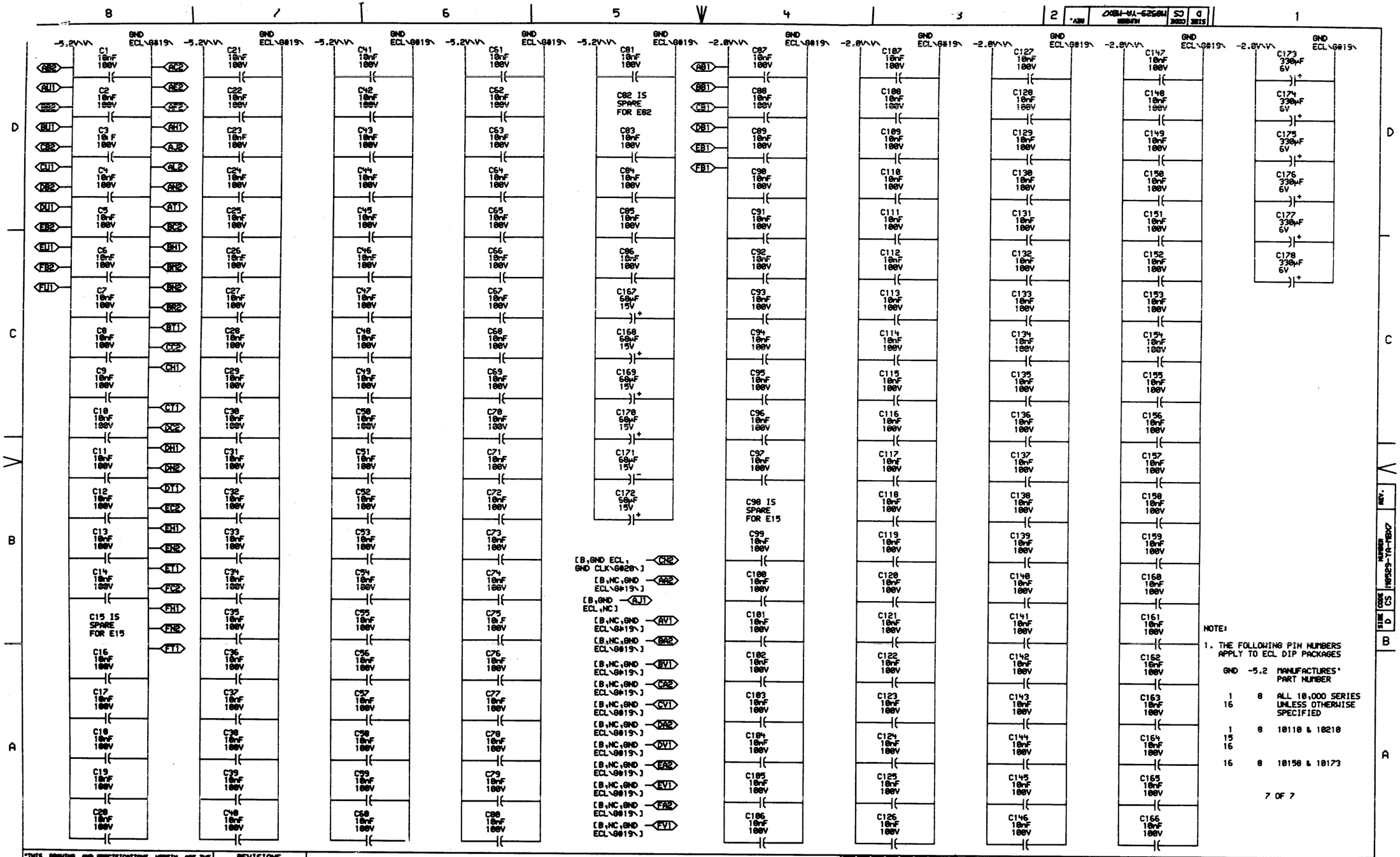

NOTE:

1. THE FOLLOWING PIN NUMBERS APPLY TO ECL DIP PACKAGES

GND	-5.2	MANUFACTURES' PART NUMBER
1 16	8	ALL 10,000 SERIES UNLESS OTHERWISE SPECIFIED
1 15 16	8	10110 & 10210
16	8	10158 & 10173

7 OF 7

"THIS DRAWING AND SPECIFICATIONS, HEREIN, ARE THE PROPERTY OF DIGITAL EQUIPMENT CORPORATION AND SHALL NOT BE REPRODUCED OR COPIED OR USED IN WHOLE OR IN PART AS THE BASIS FOR THE MANUFACTURE OR SALE OF ITEMS WITHOUT WRITTEN PERMISSION.
COPYRIGHT © 1976, DIGITAL EQUIPMENT CORPORATION"

REVISIONS		
CHK	CHANGE NO.	REV.

digital

DRN. J. Lavallee — DATE 22-NOV-76
CHK. — DATE
ENG. — DATE 30 Nov 76
MBOXEF.DRW(4,125) 12:NOV-76 15:18
BOARD LOCATION: W4F21
SHEET 1 OF 1
NEXT HIGHER ASSEMBLY: B-DD-M8529-YA
FIRST USED ON OPTION/MODEL: KL10PV

TITLE: MBOX CONTROL LOGIC PWR, GND, CAPS

SIZE	CODE	NUMBER	REV.
D	CS	M8529-YA-MBX7	

104

RESISTOR LOC(PIN)	SHOWN ON DRW#	REF	VALUE	TERMINATES SIGNAL
R167(1)	MBX3	C4	68Ω	%E20(14)
R115(1)	MBX3	C6	68Ω	%E20(15)
R170(1)	MBX3	C2	68Ω	%E20(2)
R162(1)	MBX3	C5	68Ω	%E20(3)
R51(1)	MBX2	D3	68Ω	%E3(15)
R49(1)	MBX2	D3	68Ω	%E3(2)
R171(1)	MBX6	C4	68Ω	%E32(15)
R24(1)	MBX2	B7	68Ω	%E33(2)
R29(1)	MBX2	B7	68Ω	%E33(3)
R174(1)	MBX6	C2	68Ω	%E39(14)
R178(1)	MBX5	C3	68Ω	%E39(3)
R80(1)	MBX4	C2	68Ω	%E44(14)
R220(1)	MBX3	C7	68Ω	%E44(2)
R181(1)	MBX3	C7	68Ω	%E44(3)
R57(1)	MBX4	A7	68Ω	%E44(9)
R126(1)	MBX4	B3	68Ω	%E45(14)
R75(1)	MBX4	B2	68Ω	%E45(15)
R25(1)	MBX2	A7	68Ω	%E45(6)
R23(1)	MBX2	A7	68Ω	%E45(7)
R175(1)	MBX6	B4	68Ω	%E46(15)
R231(1)	MBX3	B2	68Ω	%E48(14)
R228(1)	MBX3	B2	68Ω	%E48(15)
R232(1)	MBX3	A2	68Ω	%E48(2)
R234(1)	MBX3	A2	68Ω	%E48(3)
R81(1)	MBX4	C2	68Ω	%E50(2)
R235(1)	MBX3	A2	68Ω	%E54(14)
R233(1)	MBX3	A2	68Ω	%E54(15)
R113(1)	MBX3	D7	68Ω	%E55(3)
R70(1)	MBX6	B2	68Ω	%E56(15)
R22(1)	MBX2	A7	68Ω	%E57(6)
R20(1)	MBX2	A7	68Ω	%E57(7)
R163(1)	MBX3	D7	68Ω	%E59(14)
R130(1)	MBX3	A7	68Ω	%E59(3)
R173(1)	MBX6	B2	68Ω	%E61(14)
R111(1)	MBX2	A4	68Ω	%E62(14)
R189(1)	MBX2	A2	68Ω	%E65(2)
R39(1)	MBX3	B5	68Ω	%E65(3)
R140(1)	MBX5	B3	68Ω	%E65(9)
R83(1)	MBX5	D5	68Ω	%E68(2)
R99(1)	MBX1	B2	68Ω	%E69(14)

RESISTOR LOC(PIN)	SHOWN ON DRW#	REF	VALUE	TERMINATES SIGNAL
R147(1)	MBX1	A2	68Ω	%E69(2)
R143(1)	MBX1	A2	68Ω	%E69(3)
R71(1)	MBX1	B7	68Ω	%E69(7)
R206(1)	MBX2	C6	68Ω	%E7(14)
R149(1)	MBX2	D6	68Ω	%E7(15)
R155(1)	MBX2	C6	68Ω	%E7(2)
R148(1)	MBX2	D6	68Ω	%E7(3)
R38(1)	MBX3	B5	68Ω	%E70(14)
R82(1)	MBX3	B5	68Ω	%E70(15)
R246(1)	MBX5	D4	68Ω	%E71(13)
R90(1)	MBX3	B7	68Ω	%E72(3)
R195(1)	MBX5	D4	68Ω	%E73(2)
R194(1)	MBX5	D4	68Ω	%E73(3)
R192(1)	MBX1	A2	68Ω	%E74(3)
R87(1)	MBX5	D3	68Ω	%E75(15)
R244(1)	MBX5	D6	68Ω	%E76(15)
R35(1)	MBX1	A7	68Ω	%E77(14)
R201(1)	MBX1	A7	68Ω	%E77(15)
R200(1)	MBX1	A7	68Ω	%E77(2)
R37(1)	MBX1	A7	68Ω	%E77(3)
R36(1)	MBX1	A7	68Ω	%E79(5)
R50(1)	MBX2	C3	68Ω	%E8(15)
R54(1)	MBX2	D3	68Ω	%E8(2)
R96(1)	MBX1	B4	68Ω	%E80(2)
R139(1)	MBX2	A5	68Ω	%E81(15)
R190(1)	MBX1	B1	68Ω	%E85(15)
R243(1)	MBX1	C5	68Ω	%E85(2)
R144(1)	MBX1	B2	68Ω	%E86(3)
R106(1)	MBX3	A7	68Ω	-APR EBOX SBUS DIAG H
R95(1)	MBX5	D4	68Ω	APR2 C DIR P ERR H
R76(1)	MBX6	B2	68Ω	-CCL CH LOAD MB H
R66(1)	MBX6	B4	68Ω	CCL CH MB SEL 1 H
R121(1)	MBX6	C4	68Ω	CCL CH MB SEL 2 H
R33(1)	MBX2	C7	68Ω	CCL CHAN TO MEM H
R21(1)	MBX2	A7	68Ω	CCW CHA 34 H
R26(1)	MBX2	A7	68Ω	CCW CHA 35 H
R217(1)	MBX4	D5	68Ω	CCW WD0 REQ H
R215(1)	MBX4	D5	68Ω	CCW WD1 REQ H
R218(1)	MBX4	D5	68Ω	CCW WD2 REQ H
R214(1)	MBX4	C5	68Ω	CCW WD3 REQ H

RESISTOR LOC(PIN)	SHOWN ON DRW#	REF	VALUE	TERMINATES SIGNAL
R4(1)	MBX2	C2	68Ω	-CHAN READ H
R123(1)	MBX4	C5	68Ω	CLK1 MBX H
R67(1)	MBX1	B7	68Ω	-CON CACHE LOOK EN H
R242(1)	MBX5	D6	68Ω	-CSH ADR PAR BAD H
R216(1)	MBX4	B5	68Ω	-CSH CHAN CYC H
R46(1)	MBX1	A7	68Ω	CSH WD 0 VAL H
R150(1)	MBX2	D5	68Ω	CSH WD 0 WR H
R43(1)	MBX1	A7	68Ω	CSH WD 1 VAL H
R153(1)	MBX2	D5	68Ω	CSH WD 1 WR H
R48(1)	MBX1	A7	68Ω	CSH WD 2 VAL H
R200(1)	MBX2	C5	68Ω	CSH WD 2 WR H
R47(1)	MBX1	A7	68Ω	CSH WD 3 VAL H
R207(1)	MBX2	C5	68Ω	CSH WD 3 WR H
R91(1)	MBX1	C2	68Ω	-CSH1 CCA CYC H
R132(1)	MBX5	B3	68Ω	-CSH1 MB CYC H
R251(1)	MBX1	D7	68Ω	-CSH1 MB REQ GRANT H
R128(1)	MBX5	C7	68Ω	-CSH1 PGRF CYC A H
R205(1)	MBX1	D4	68Ω	CSH1 READY TO GO H
R236(1)	MBX5	A6	68Ω	CSH2 E CACHE WR CYC H
R135(1)	MBX4	B5	68Ω	-CSH2 E CORE RD RQ H
R27(1)	MBX5	C4	68Ω	-CSH2 ONE WORD RD H
R241(1)	MBX5	D5	68Ω	-CSH3 ADR READY H
R138(1)	MBX2	B5	68Ω	CSH3 ANY VAL HOLD IN H
R203(1)	MBX2	A4	68Ω	-CSH3 MB WR RQ CLR NXT H
R34(1)	MBX4	B3	68Ω	-CSH4 ONE WORD WR T0 H
R79(1)	MBX4	D2	68Ω	-CSH4 WRITEBACK T1 A H
R230(1)	MBX2	B7	68Ω	-CSH5 CHAN T4 H
R237(1)	MBX2	B7	68Ω	-CSH5 PAGE REFILL T0 H
R238(1)	MBX2	B7	68Ω	-CSH5 T2 H
R202(1)	MBX1	C4	68Ω	-CSH6 CCA CYC DONE H
R204(1)	MBX1	A3	68Ω	-CSH6 CCA INVAL T4 H
R136(1)	MBX1	C7	68Ω	CSH6 EBOX LOAD REG H
R249(1)	MBX1	D3	68Ω	IR AC 10 H
R250(1)	MBX1	D3	68Ω	IR AC 11 H
R248(1)	MBX1	D3	68Ω	IR AC 12 H
R110(1)	MBX3	D2	68Ω	MB PAR BIT IN H
R40(1)	MBX3	B5	68Ω	-MBC3 A CHANGE COMING A H
R177(1)	MBX4	B7	68Ω	-MBC3 CSH WR WR DATA H
R88(1)	MBX5	B3	68Ω	MBC3 INH 1ST MB REQ H
R122(1)	MBX2	B3	68Ω	MBC4 CORE ADR 34 H

RESISTOR LOC(PIN)	SHOWN ON DRW#	REF	VALUE	TERMINATES SIGNAL
R65(1)	MBX2	B3	68Ω	MBC4 CORE ADR 35 H
R89(1)	MBX6	B7	68Ω	-MBC4 CORE DATA VAL -2 H
R188(1)	MBX3	A7	68Ω	-MBC4 MEM START H
R145(1)	MBX1	C4	68Ω	MBX1 CCA CYC DONE A H
R100(1)	MBX1	C4	68Ω	-MBX1 CCA CYC DONE A H
R42(1)	MBX1	A1	68Ω	MBX1 CCA HOLD ADR H
R199(1)	MBX1	A1	68Ω	-MBX1 CCA HOLD ADR H
R98(1)	MBX1	B4	68Ω	-MBX1 CCA SEL 1 H
R44(1)	MBX1	A4	68Ω	MBX1 CSH CCA CYC A H
R94(1)	MBX1	D2	68Ω	MBX1 CSH CCA ONE PAGE H
R151(1)	MBX1	A6	68Ω	MBX1 CSH WD 0 VAL B H
R152(1)	MBX1	A6	68Ω	MBX1 CSH WD 1 VAL B H
R209(1)	MBX1	A6	68Ω	MBX1 CSH WD 2 VAL B H
R211(1)	MBX1	A6	68Ω	MBX1 CSH WD 3 VAL B H
R196(1)	MBX1	D4	68Ω	MBX1 EBOX PAGED A H
R239(1)	MBX1	D4	68Ω	MBX1 READY TO GO A H
R247(1)	MBX1	D4	68Ω	-MBX1 READY TO GO A H
R252(1)	MBX1	D6	68Ω	-MBX1 REFILL ADR EN A H
R52(1)	MBX1	A4	68Ω	MBX1 RESET H
R180(1)	MBX1	A4	68Ω	-MBX1 RESET H
R125(1)	MBX2	B4	68Ω	MBX2 ANY VAL HOLD H
R172(1)	MBX2	D7	68Ω	MBX2 CACHE TO MB CONT H
R8(1)	MBX2	C1	68Ω	MBX2 CHAN READ A H
R1(1)	MBX2	C1	68Ω	-MBX2 CHAN READ A H
R210(1)	MBX2	C6	68Ω	MBX2 CHAN WR CYC H
R104(1)	MBX2	B3	68Ω	MBX2 CORE WD 0 COMING H
R107(1)	MBX2	B3	68Ω	MBX2 CORE WD 1 COMING H
R103(1)	MBX2	B3	68Ω	MBX2 CORE WD 2 COMING H
R102(1)	MBX2	B3	68Ω	MBX2 CORE WD 3 COMING H
R32(1)	MBX2	D5	68Ω	MBX2 CSH PGRF CYC B H
R114(1)	MBX2	D5	68Ω	MBX2 CSH TO MB WD 0 H
R161(1)	MBX2	D5	68Ω	MBX2 CSH TO MB WD 1 H
R166(1)	MBX2	C5	68Ω	MBX2 CSH TO MB WD 2 H
R169(1)	MBX2	C5	68Ω	MBX2 CSH TO MB WD 3 H
R154(1)	MBX2	B6	68Ω	-MBX2 CTOMB LOAD H
R3(1)	MBX2	D2	68Ω	MBX2 MB 0 WR RQ H
R19(1)	MBX2	D1	68Ω	-MBX2 MB 0 WR RQ H
R108(1)	MBX2	D2	68Ω	MBX2 MB 1 WR RQ H
R15(1)	MBX2	D1	68Ω	-MBX2 MB 1 WR RQ H
R2(1)	MBX2	D2	68Ω	MBX2 MB 2 WR RQ H

NOTE:

1. ALL TERMINATORS HAVE PIN TWO CONNECTED TO -2.0V AND ARE 5% 1/4WATT UNLESS OTHERWISE SPECIFIED
2. ENTRIES ARE SORTED BY SIGNAL NAME
3. % INDICATES OUTPUT OF DIP LOC AND () INDICATES PIN NUMBER

"THIS DRAWING AND SPECIFICATIONS, HEREIN, ARE THE PROPERTY OF DIGITAL EQUIPMENT CORPORATION AND SHALL NOT BE REPRODUCED OR COPIED OR USED IN WHOLE OR IN PART AS THE BASIS FOR THE MANUFACTURE OR SALE OF ITEMS WITHOUT WRITTEN PERMISSION. COPYRIGHT © 1976, DIGITAL EQUIPMENT CORPORATION"

REVISIONS		
CHK	CHANGE NO.	REV

digital

DRN. G Smith DATE 13-OCT-76 ENG. J. Allen DATE 1 Nov 76
CHK DATE 10/14/76 BOARD LOCATION: 4AF21
SHEET 1 OF 2
F05291.DRW[4,175] 13-OCT-76 11:22 NEXT HIGHER ASSEMBLY: B-DD-M8529-YA
FIRST USED ON OPTION/MODEL: KL10

TITLE: MBOX CONTROL TERMINATORS

SIZE	CODE	NUMBER	REV.
D	CS	M8529-YA-RES	

105

RESISTOR LOC(PIN)	SHOWN ON DRW#	REF	VALUE	TERMINATES SIGNAL
R17(1)	MBX2	D1	68Ω	-MBX2 MB 2 WR RQ H
R5(1)	MBX2	C2	68Ω	MBX2 MB 3 WR RQ H
R9(1)	MBX2	D1	68Ω	-MBX2 MB 3 WR RQ H
R63(1)	MBX2	B1	68Ω	MBX2 MB SEL 1A H
R59(1)	MBX2	C1	68Ω	-MBX2 MB SEL 1A H
R109(1)	MBX2	B1	68Ω	MBX2 MB SEL 1B H
R119(1)	MBX2	B1	68Ω	MBX2 MB SEL 2A H
R106(1)	MBX2	C1	68Ω	-MBX2 MB SEL 2A H
R223(1)	MBX2	B1	68Ω	MBX2 MB SEL 2B H
R93(1)	MBX2	A3	68Ω	MBX2 MB SEL HOLD FF IN H
R141(1)	MBX2	A4	68Ω	-MBX2 MB WR RQ CLR FF H
R97(1)	MBX2	C7	68Ω	MBX2 MB WR RQ ANY H
R105(1)	MBX2	C3	68Ω	-MBX2 MB WR RQ CLR H
R7(1)	MBX2	C7	68Ω	MBX2 MB WR RQ P1 H
R6(1)	MBX2	C7	68Ω	MBX2 MB WR RQ P2 H
R112(1)	MBX3	B7	68Ω	MBX3 CORE BUSY 1A H
R240(1)	MBX3	B7	68Ω	-MBX3 CORE BUSY 1A H
R69(1)	MBX3	D6	68Ω	MBX3 CTOMB WD 0 RQ H
R73(1)	MBX3	D5	68Ω	MBX3 CTOMB WD 1 RQ H
R74(1)	MBX3	D3	68Ω	MBX3 CTOMB WD 2 RQ H
R70(1)	MBX3	D2	68Ω	MBX3 CTOMB WD 3 RQ H
R85(1)	MBX3	B3	68Ω	MBX3 DIAG CYC DONE H
R72(1)	MBX3	A7	68Ω	MBX3 EBOX DIAG CYC H
R133(1)	MBX3	A7	68Ω	-MBX3 EBOX DIAG CYC H
R61(1)	MBX3	B7	68Ω	MBX3 HI
R41(1)	MBX3	C6	68Ω	MBX3 MB REQ ALLOW H
R92(1)	MBX3	C7	68Ω	-MBX3 MB REQ ALLOW H
R137(1)	MBX3	B6	68Ω	-MBX3 MB REQ ALLOW FF H
R117(1)	MBX3	D6	68Ω	MBX3 MB0 DATA CODE 1 H
R110(1)	MBX3	D6	68Ω	MBX3 MB0 DATA CODE 2 H
R157(1)	MBX3	D6	68Ω	MBX3 MB0 PAR H
R164(1)	MBX3	D5	68Ω	MBX3 MB1 DATA CODE 1 H
R116(1)	MBX3	D5	68Ω	MBX3 MB1 DATA CODE 2 H
R159(1)	MBX3	D5	68Ω	MBX3 MB1 PAR H
R165(1)	MBX3	D3	68Ω	MBX3 MB2 DATA CODE 1 H
R64(1)	MBX3	D3	68Ω	MBX3 MB2 DATA CODE 2 H
R150(1)	MBX3	D3	68Ω	MBX3 MB2 PAR H
R120(1)	MBX3	D2	68Ω	MBX3 MB3 DATA CODE 1 H
R168(1)	MBX3	D2	68Ω	MBX3 MB3 DATA CODE 2 H
R160(1)	MBX3	D2	68Ω	MBX3 MB3 PAR H

RESISTOR LOC(PIN)	SHOWN ON DRW#	REF	VALUE	TERMINATES SIGNAL
R104(1)	MBX3	B4	68Ω	-MBX3 SBUS DIAG 0 H
R31(1)	MBX3	B3	68Ω	MBX3 SBUS DIAG 1 H
R102(1)	MBX3	B4	68Ω	-MBX3 SBUS DIAG 1 H
R107(1)	MBX3	B3	68Ω	MBX3 SBUS DIAG 2 H
R86(1)	MBX3	B4	68Ω	-MBX3 SBUS DIAG 2 H
R221(1)	MBX3	B4	68Ω	-MBX3 SBUS DIAG CYC H
R227(1)	MBX4	A2	68Ω	MBX4 CACHE TO MB DONE H
R127(1)	MBX4	C2	68Ω	-MBX4 CACHE TO MB T1 H
R224(1)	MBX4	B2	68Ω	-MBX4 CACHE TO MB T3 H
R176(1)	MBX4	A2	68Ω	MBX4 CACHE TO MB T4 H
R45(1)	MBX4	C4	68Ω	MBX4 CLK A H
R84(1)	MBX4	C4	68Ω	MBX4 CLK B H
R146(1)	MBX4	C4	68Ω	MBX4 CLK C H
R53(1)	MBX4	C4	68Ω	MBX4 CLK D H
R156(1)	MBX4	C4	68Ω	MBX4 CLK E H
R245(1)	MBX4	C4	68Ω	MBX4 CLK F H
R58(1)	MBX4	B5	68Ω	-MBX4 CSH CHAN CYC A H
R193(1)	MBX4	B5	68Ω	MBX4 E CORE RD RQ A H
R253(1)	MBX4	B5	68Ω	-MBX4 E CORE RD RQ A H
R10(1)	MBX4	D5	68Ω	-MBX4 WD 0 NEEDED H
R11(1)	MBX4	D5	68Ω	-MBX4 WD 1 NEEDED H
R16(1)	MBX4	D5	68Ω	-MBX4 WD 2 NEEDED H
R10(1)	MBX4	C5	68Ω	-MBX4 WD 3 NEEDED H
R68(1)	MBX5	D3	68Ω	MBX5 C DIR PAR ERR H
R134(1)	MBX5	C3	68Ω	MBX5 ONE WORD RD A H
R14(1)	MBX5	C3	68Ω	-MBX5 ONE WORD RD A H
R56(1)	MBX5	B3	68Ω	MBX5 PA 34 A H
R60(1)	MBX5	B3	68Ω	-MBX5 PA 34 A H
R62(1)	MBX5	A3	68Ω	MBX5 PA 35 A H
R55(1)	MBX5	A3	68Ω	-MBX5 PA 35 A H
R129(1)	MBX5	C6	68Ω	MBX5 RD NON-VAL WDS H
R12(1)	MBX5	C6	68Ω	-MBX5 RD NON-VAL WDS H
R13(1)	MBX5	A6	68Ω	-MBX5 WR WDS IN MB H
R77(1)	MBX6	B6	68Ω	-MBX6 CORE DATA VALID -1 B H
R191(1)	MBX6	A6	68Ω	-MBX6 CORE DATA VALID B H
R219(1)	MBX6	C6	68Ω	MBX6 DIAG 04 H
R226(1)	MBX6	C6	68Ω	MBX6 DIAG 05 H
R225(1)	MBX6	B6	68Ω	MBX6 DIAG 06 H
R222(1)	MBX6	B6	68Ω	-MBX6 DIAG EN H
R179(1)	MBX5	C3	68Ω	-MCL2 VMA PAUSE H

RESISTOR LOC(PIN)	SHOWN ON DRW#	REF	VALUE	TERMINATES SIGNAL
R142(1)	MBX1	B5	68Ω	-MCL6 EBOX CACHE H
R131(1)	MBX5	B3	68Ω	-MEM TO C DIAG EN H
R229(1)	MBX3	A5	68Ω	-MEM WR RQ H
R212(1)	MBX1	C6	68Ω	NC SEE NOTE 4
R213(1)	MBX2	A3	68Ω	NC SEE NOTE 4
R190(1)	MBX1	B5	68Ω	-PAG1 PT CACHE H
R124(1)	MBX4	B3	68Ω	-PHASE CHANGE COMING H
R101(1)	MBX1	B2	68Ω	-PMA2 CCA CRY OUT H
R20(1)	MBX5	B3	68Ω	PMA4 PA 34 H
R30(1)	MBX5	A3	68Ω	PMA4 PA 35 H
R105(1)	MBX3	A7	68Ω	-PMA5 CSH EBOX CYC H
R103(1)	MBX5	A6	68Ω	PMA5 CSH WRITEBACK CYC H
R197(1)	MBX1	B5	68Ω	-PMA5 EBOX PAGED H

NOTE:

1. ALL TERMINATORS HAVE PIN TWO CONNECTED TO -2.0V AND ARE 5% 1/4WATT UNLESS OTHERWISE SPECIFIED
2. ENTRIES ARE SORTED BY SIGNAL NAME
3. % INDICATES OUTPUT OF DIP LOC AND ( ) INDICATES PIN NUMBER
4. R212 AND R213 ARE NOT TO BE USED OR INSTALLED

"THIS DRAWING AND SPECIFICATIONS, HEREIN, ARE THE PROPERTY OF DIGITAL EQUIPMENT CORPORATION AND SHALL NOT BE REPRODUCED OR COPIED OR USED IN WHOLE OR IN PART AS THE BASIS FOR THE MANUFACTURE OR SALE OF ITEMS WITHOUT WRITTEN PERMISSION. COPYRIGHT © 1976, DIGITAL EQUIPMENT CORPORATION"

REVISIONS		
CHK	CHANGE NO.	REV

DRN. C Smith DATE 12-OCT-76 ENG. DATE
CHK. DATE BOARD LOCATION: 4A23
SHEET 2 OF 2
F02592.DRW(4.175) 13-OCT-76 11:22 NEXT HIGHER ASSEMBLY: B-DD-M8529-YA
FIRST USED ON OPTION/MODEL: KL10

TITLE: MBOX CONTROL TERMINATORS

SIZE	CODE	NUMBER	REV.
D	CS	M8529-YA-RES	

180

SIZE	CODE	NUMBER	REV.
B	DD	M8531-YA	

DRAWING NO.	NO. OF SHTS	PART NO.	DESCRIPTION	REVISIONS
			MODULE REVISION	A
D-UA-M8531-YA-Ø	5		M BOX CONTROL #3	-
D-CS-M8531-YA-MBC1	1		CSH ADR MIX, EBUS & PMA HOLD REG	-
D-CS-M8531-YA-MBC2	1		CACHE WR PULSE, CSH DATA CLR	-
D-CS-M8531-YA-MBC3	1		DATA VAL OUT, CLK, PHS, MEM START	-
D-CS-M8531-YA-MBC4	1		MEM REQUEST, ACK & DAT VAL CTRS	-
D-CS-M8531-YA-MBC5	1		FORCE VAL MATCH & MBC DIAG MIX	-
D-CS-M8531-YA-MBC6	1		MBC MBOX CONTROL PWR,GND,CAPS	-
D-CS-M8531-YA-RES	2		MBC MBOX CONTROL TERMINATORS	-
D-AH-M8531-Ø-5	4		M BOX CONTROL #3	B
		5010694	ETCHED CIRCUIT BOARD	C
M8531-Ø-L			P.C. DESIGN DATA BASE	REF
M8531-YA-PL			INSERTION P/L DATA BASE	REF
POO-M8531-YA			PROCESS SHEET	REF

NOTES:

REVISIONS	
REV.	X
CHG NO.	ORIG
DATE	X

"THIS DRAWING AND SPECIFICATIONS, HEREIN, ARE THE PROPERTY OF DIGITAL EQUIPMENT CORPORATION AND SHALL NOT BE REPRODUCED OR COPIED OR USED IN WHOLE OR IN PART AS THE BASIS FOR THE MANUFACTURE OR SALE OF ITEMS WITHOUT WRITTEN PERMISSION.
COPYRIGHT ©1976, DIGITAL EQUIPMENT CORPORATION"

digital

USED ON OPTION/MODEL	
KLIØ-DA,DB	
KLIØ-EA,EB	
KLIØ-PV	

DRN.	M Pascarelli	11 OCT 76
CHK'D	M O'Rourke	11 OCT 76
ENG.	J. D. Allen	8 Dec 76
PROD.	W. Emley	8 Dec 76

TITLE: M BOX CONTROL #3

SIZE	CODE	NUMBER	REV.
B	DD	M8531-YA	

SHEET 1 OF 1

MR

DRB 126 EN-01149-16-N176(325)

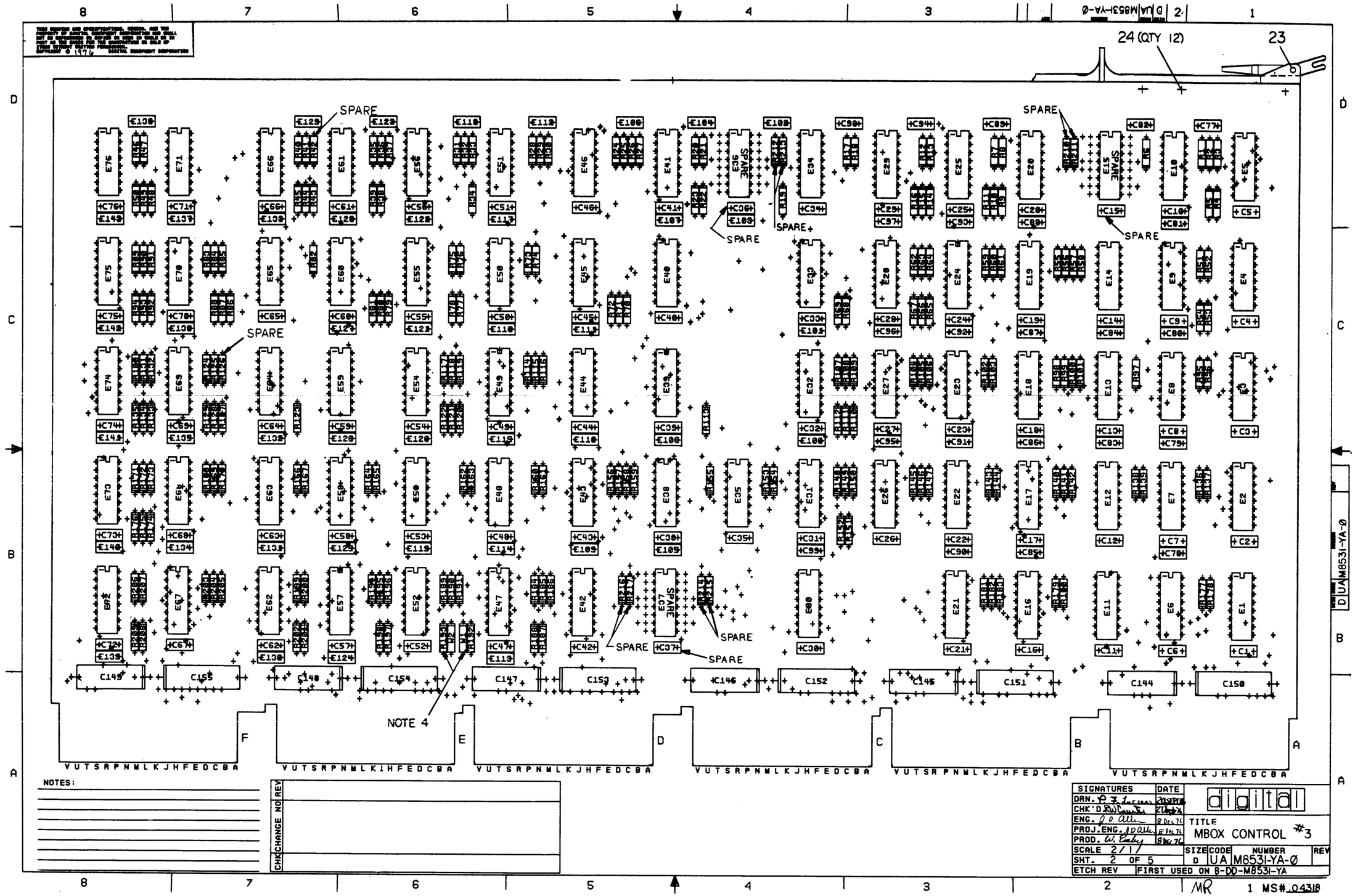
24 (QTY 12)
23
SPARE
NOTE 4
NOTES:
CHANGE NO REV
CHK
SIGNATURES
DATE
DRN.
CHK'D
ENG.
PROJ.ENG.
PROD.
SCALE 2/1
SHT. 2 OF 5
ETCH REV
FIRST USED ON B-DD-M8531-YA
digital
TITLE
MBOX CONTROL #3
SIZE D
CODE UA
NUMBER M8531-YA-0
REV
MR
1 MS#.04318
DUA M8531-YA-0

188

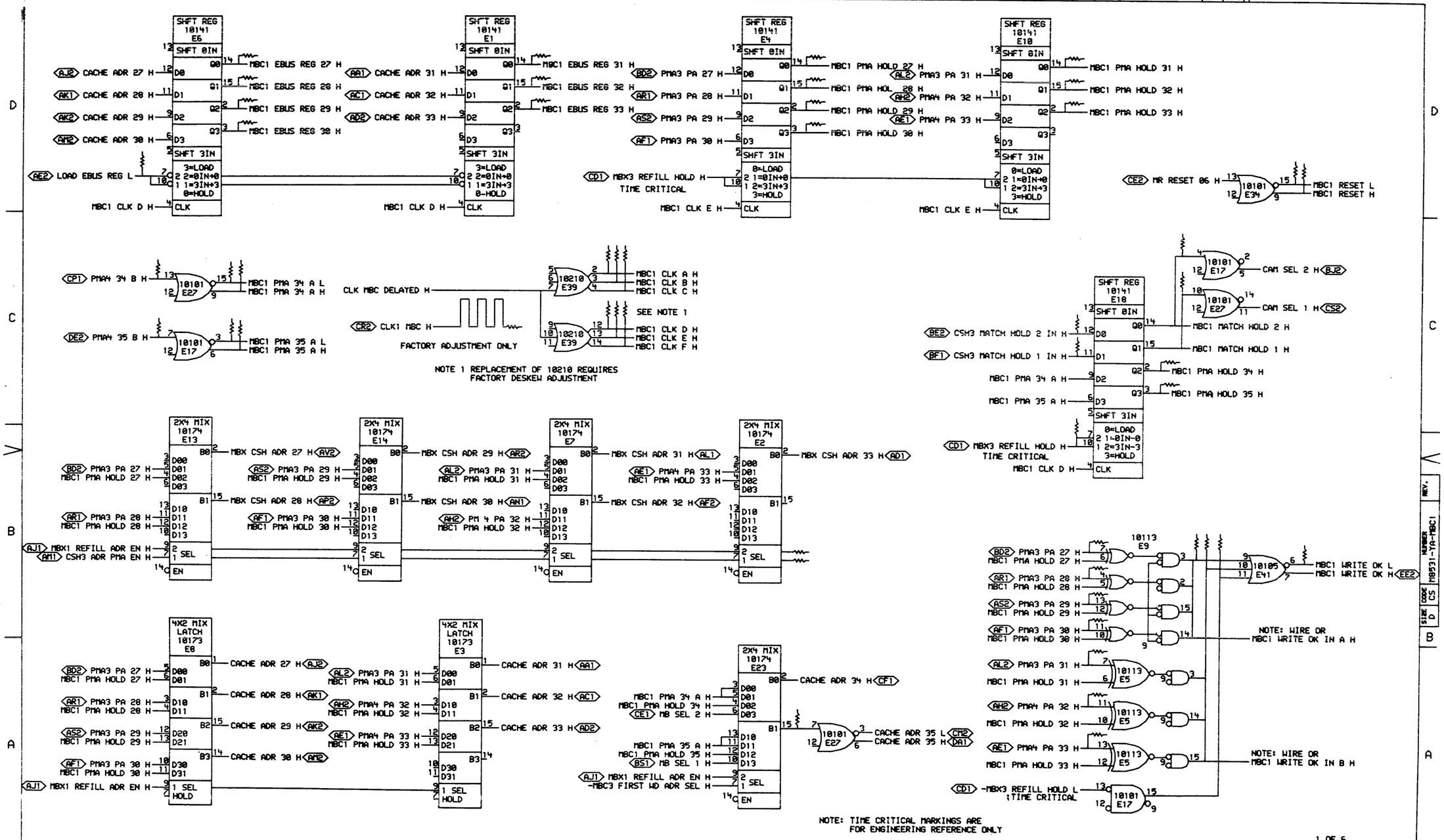

"THIS DRAWING AND SPECIFICATIONS, HEREIN, ARE THE PROPERTY OF DIGITAL EQUIPMENT CORPORATION AND SHALL NOT BE REPRODUCED OR COPIED OR USED IN WHOLE OR IN PART AS THE BASIS FOR THE MANUFACTURE OR SALE OF ITEMS WITHOUT WRITTEN PERMISSION. COPYRIGHT © 1976, DIGITAL EQUIPMENT CORPORATION"

REVISIONS		
CHK	CHANGE NO.	REV

digital

DRN. J. Toomey DATE 18-NOV-76
CHK'D. C. Stephens DATE 11/19/76
ENG. R.O. Allen DATE 23 Nov 76
BOARD LOCATION: 4AF22
SHEET 1 OF 1
MBC1EF.DRW(4,175) 09-NOV-76 08:44
NEXT HIGHER ASSEMBLY: 8-DD-M8531-YA
FIRST USED ON OPTION/MODEL: KL10PV

TITLE: CSH ADR MIX, EBUS & PMA HOLD REG

SIZE	CODE	NUMBER	REV.
D	CS	M8531-YA-MBC1	

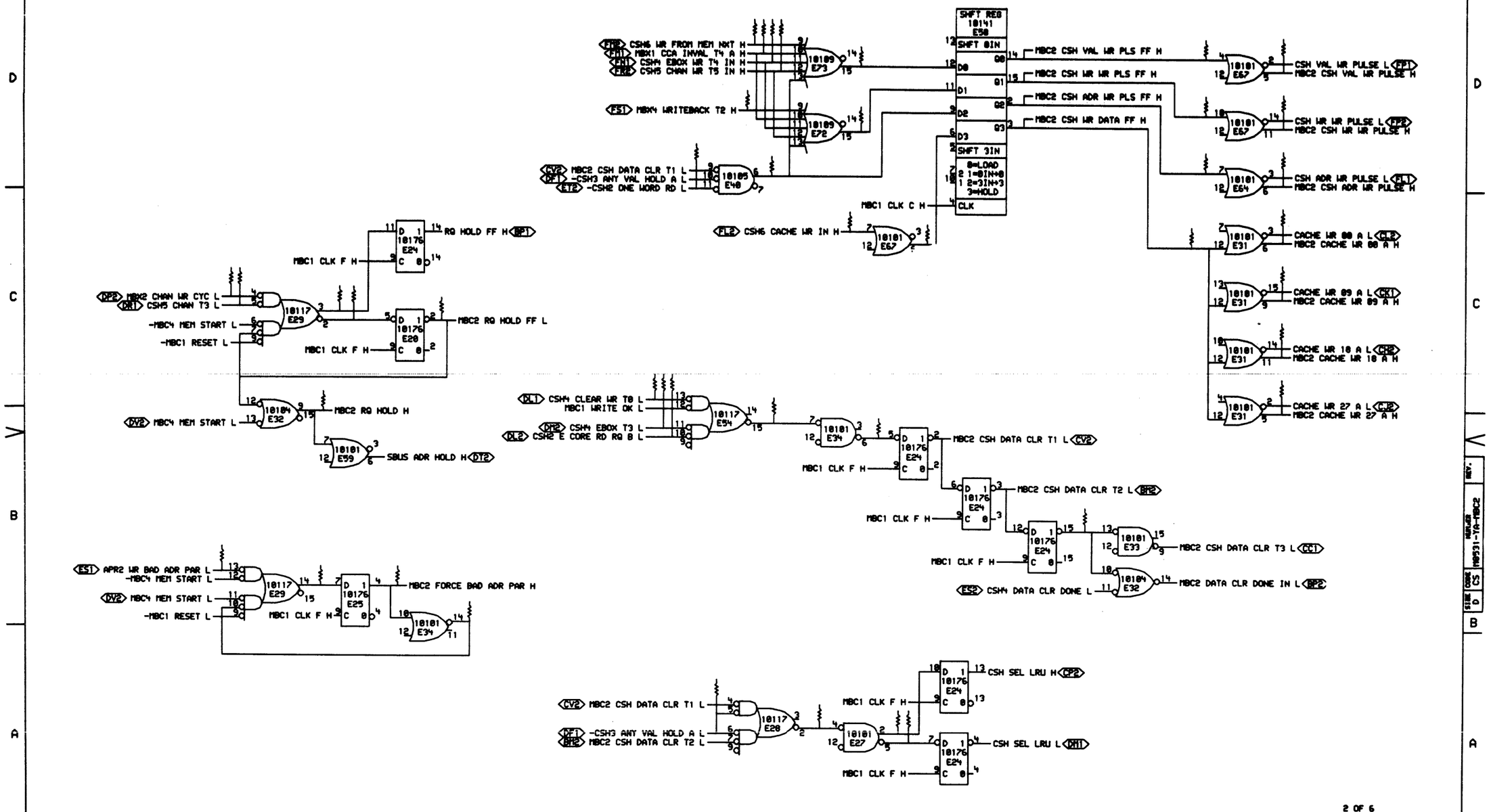

"THIS DRAWING AND SPECIFICATIONS, HEREIN, ARE THE PROPERTY OF DIGITAL EQUIPMENT CORPORATION AND SHALL NOT BE REPRODUCED OR COPIED OR USED IN WHOLE OR IN PART AS THE BASIS FOR THE MANUFACTURE OR SALE OF ITEMS WITHOUT WRITTEN PERMISSION. COPYRIGHT © 1976, DIGITAL EQUIPMENT CORPORATION"

REVISIONS		
CHK	CHANGE NO.	REV

digital

DRN. J. Loomis DATE 19-NOV-76 ENG. J.D. Allen DATE 23 Nov 76
CHK'DR DATE BOARD LOCATION: 4AF22
MBC2EF.DRW[4,175] 09-NOV-76 08:21 SHEET 1 OF 1 NEXT HIGHER ASSEMBLY:
FIRST USED ON OPTION/MODEL: KL10PV B-DD-M8531-YA

TITLE: CACHE WR PULSE, CSH DATA CLR

SIZE	CODE	NUMBER	REV.
D	CS	M8531-YA-MBC2	

MR 1

190

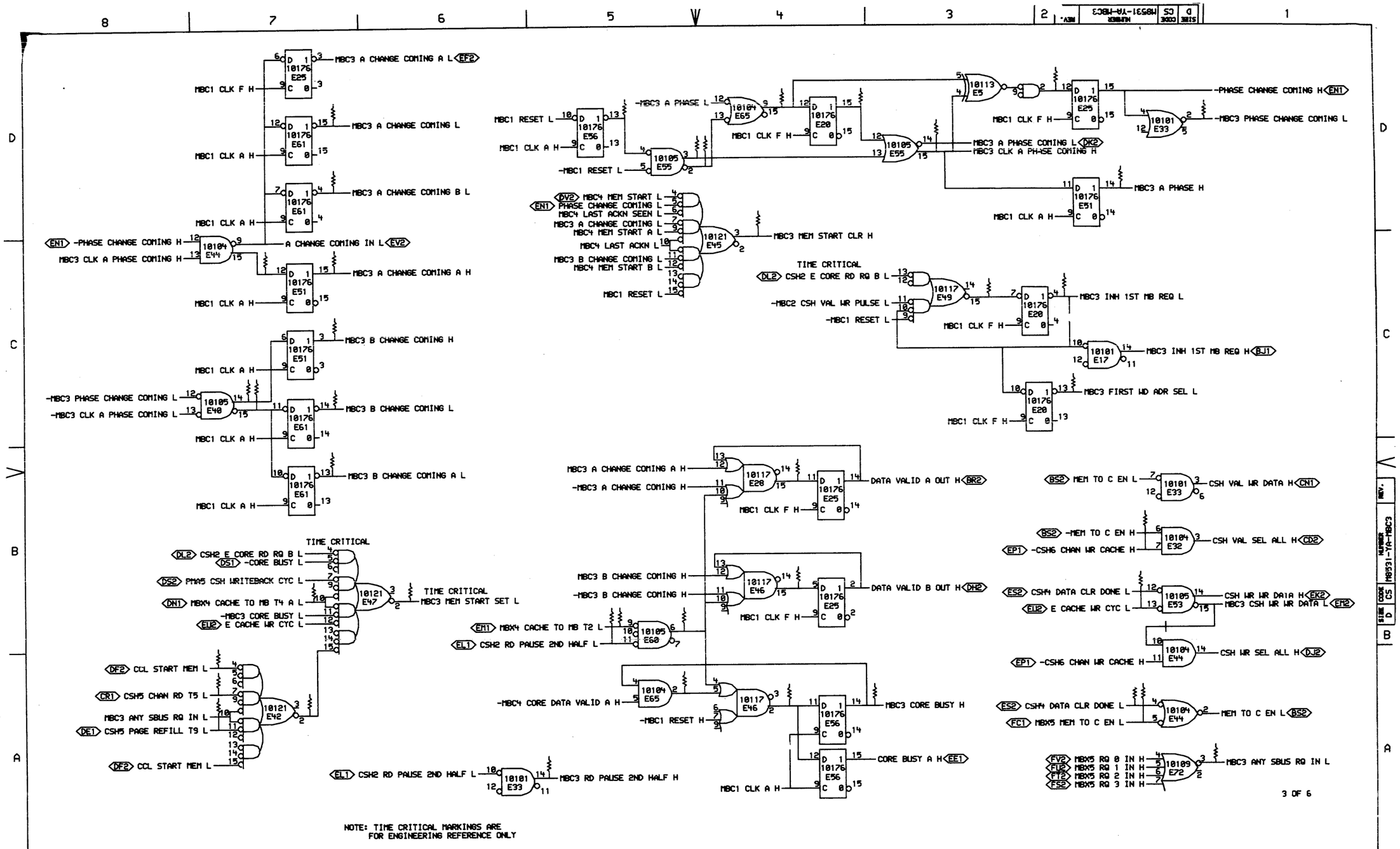

NOTE: TIME CRITICAL MARKINGS ARE FOR ENGINEERING REFERENCE ONLY

"THIS DRAWING AND SPECIFICATIONS, HEREIN, ARE THE PROPERTY OF DIGITAL EQUIPMENT CORPORATION AND SHALL NOT BE REPRODUCED OR COPIED OR USED IN WHOLE OR IN PART AS THE BASIS FOR THE MANUFACTURE OR SALE OF ITEMS WITHOUT WRITTEN PERMISSION. COPYRIGHT © 1976, DIGITAL EQUIPMENT CORPORATION"

REVISIONS		
CHK	CHANGE NO.	REV

digital

MBC3EF.DRW[4,1751] 09-NOV-76 08:28

FIRST USED ON OPTION/MODEL: KL10PV

DRN. | DATE 18-NOV-76 | ENG. | DATE 23 Nov 76 | TITLE: DATA VAL OUT, CLK,PHS,MEM START

CHK | DATE 11/19/76 | BOARD LOCATIONS 4AF22 | SHEET 1 OF 1

NEXT HIGHER ASSEMBLY: B-DD-M8531-YA

SIZE	CODE	NUMBER	REV.
D	CS	M8531-YA-MBC3	

MR

191

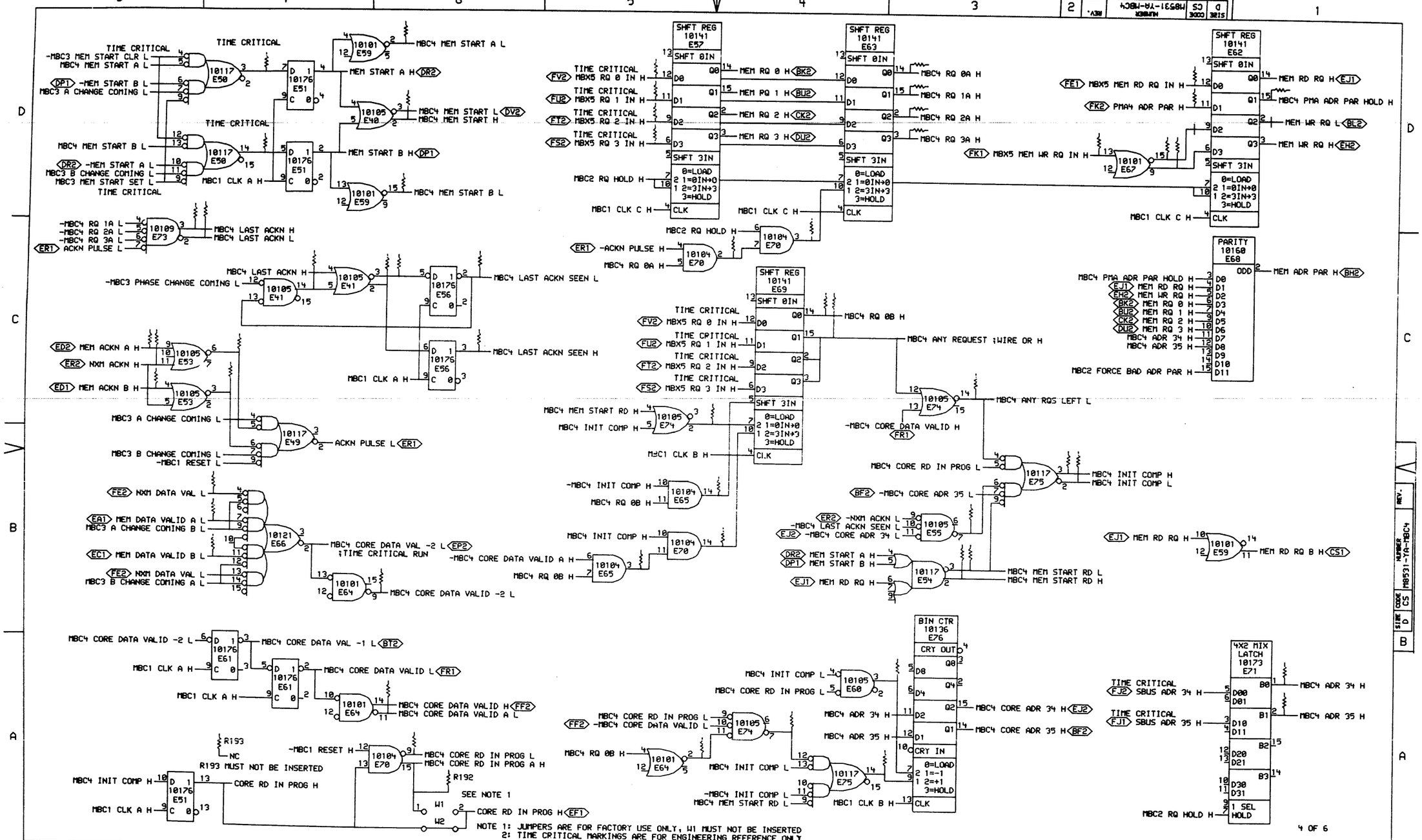

"THIS DRAWING AND SPECIFICATIONS, HEREIN, ARE THE PROPERTY OF DIGITAL EQUIPMENT CORPORATION AND SHALL NOT BE REPRODUCED OR COPIED OR USED IN WHOLE OR IN PART AS THE BASIS FOR THE MANUFACTURE OR SALE OF ITEMS WITHOUT WRITTEN PERMISSION. COPYRIGHT © 1976, DIGITAL EQUIPMENT CORPORATION"

REVISIONS		
CHK	CHANGE NO.	REV

digital

DRN. | DATE 16-NOV-76 | ENG. | DATE 23 Nov 76
CHK. | DATE 11/16/76 | BOARD LOCATION: 4AF22
SHEET 1 OF 1
MBC4EF.DRW(4,175) 16-NOV-76 17:50
FIRST USED ON OPTION/MODEL: KL10PV
NEXT HIGHER ASSEMBLY: B-DD-M8531-YA

TITLE: MEM REQUESTS, ACK & DAT VAL CTRS

SIZE	CODE	NUMBER	REV.
D	CS	M8531-YA-MBC4	

142

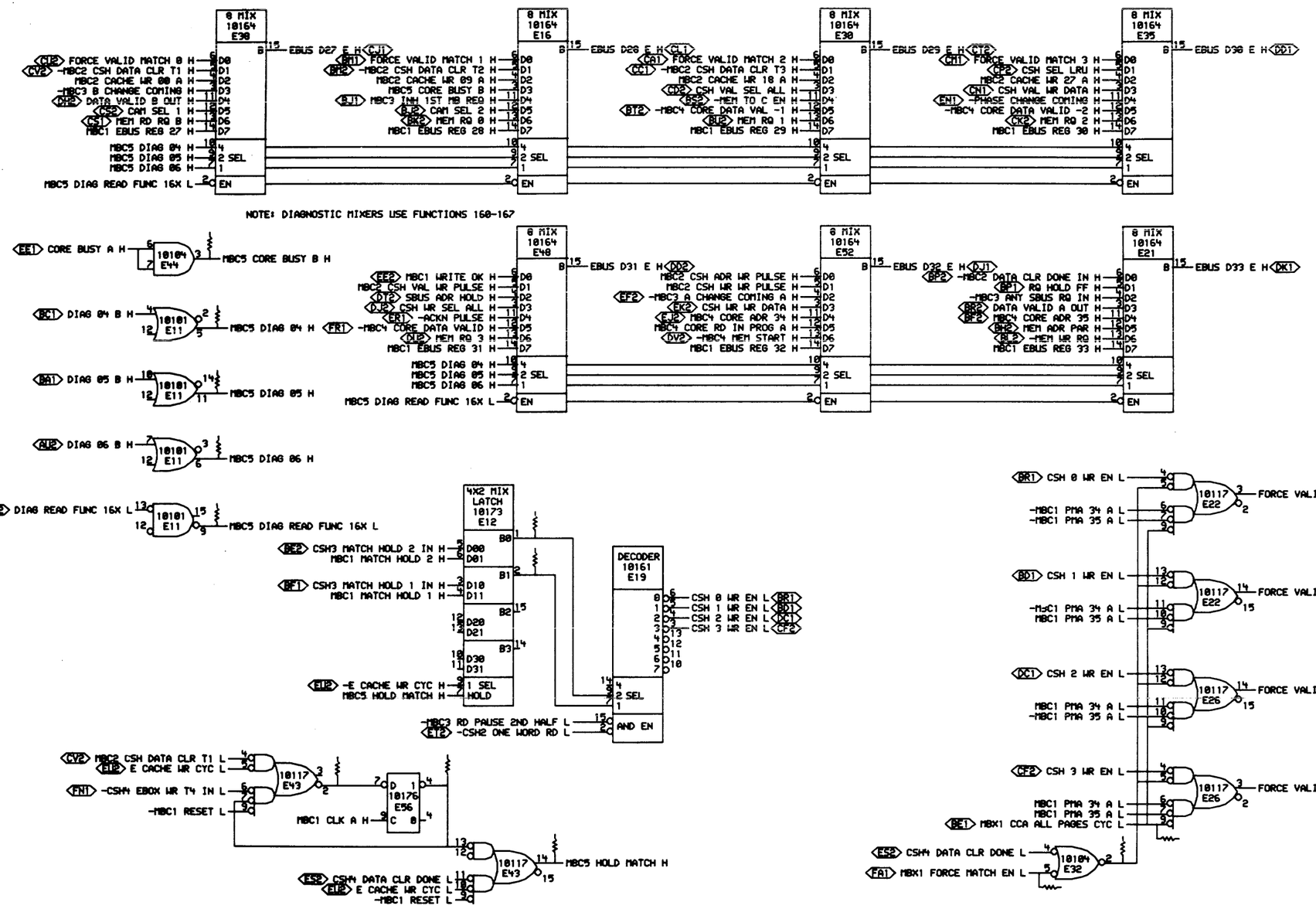

"THIS DRAWING AND SPECIFICATIONS, HEREIN, ARE THE PROPERTY OF DIGITAL EQUIPMENT CORPORATION AND SHALL NOT BE REPRODUCED OR COPIED OR USED IN WHOLE OR IN PART AS THE BASIS FOR THE MANUFACTURE OR SALE OF ITEMS WITHOUT WRITTEN PERMISSION. COPYRIGHT © 1976, DIGITAL EQUIPMENT CORPORATION"

REVISIONS		
CHK	CHANGE NO.	REV

digital

DRN. | DATE 10-NOV-76
CHK | DATE 8-SEP-76
ENG. | DATE 28 Oct 76
BOARD LOCATION: 4A22
SHEET 1 OF 1
MBCSEF.DRW[4,175] 07-SEP-76 17:07
NEXT HIGHER ASSEMBLY: B-DD-M8531-YA
FIRST USED ON OPTION/MODEL: KL10PV

TITLE: FORCE VAL MATCH & MBC DIAG MIX

SIZE	CODE	NUMBER	REV.
D	CS	M8531-YA-MBC5	

MR

193

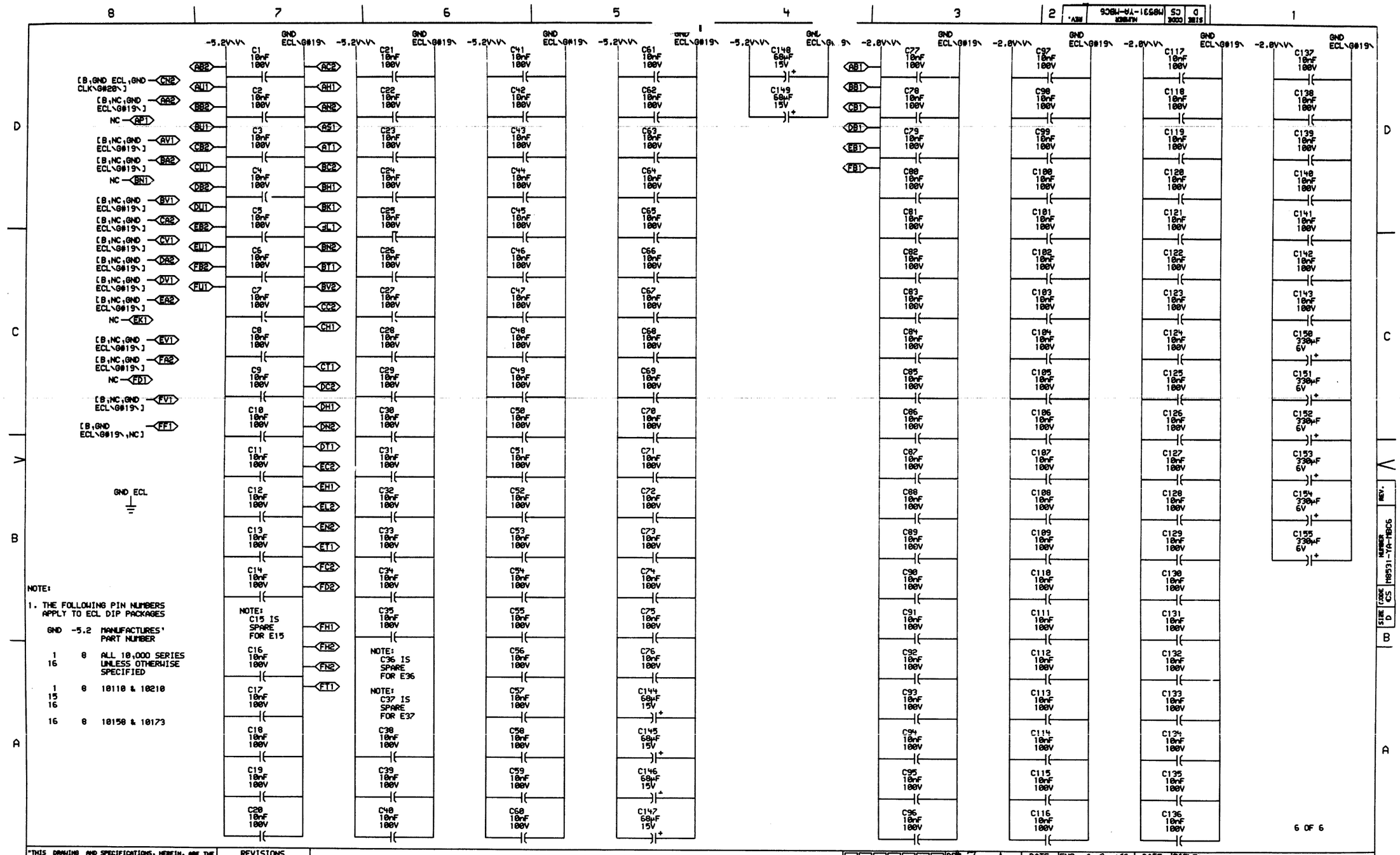

"THIS DRAWING AND SPECIFICATIONS, HEREIN, ARE THE PROPERTY OF DIGITAL EQUIPMENT CORPORATION AND SHALL NOT BE REPRODUCED OR COPIED OR USED IN WHOLE OR IN PART AS THE BASIS FOR THE MANUFACTURE OR SALE OF ITEMS WITHOUT WRITTEN PERMISSION. COPYRIGHT © 1976, DIGITAL EQUIPMENT CORPORATION"

REVISIONS		
CHK	CHANGE NO.	REV

digital

DRN. J. Loosley DATE 10-NOV-76 ENG. J.P. Allen DATE 23 NOV 76
CHK W. Stephenson DATE 11/23/76 BOARD LOCATION: 4AF22
MBCSEF.DRW[4,1753] 10-NOV-76 19:04 SHEET 1 OF 1
FIRST USED ON OPTION/MODEL: KL10PV NEXT HIGHER ASSEMBLY: B-DD-M8531-YA

TITLE: MBC MBOX CONTROL PWR, GND, CAPS

SIZE	CODE	NUMBER	REV.
D	CS	M8531-YA-MBC6	

MR

144

RESISTOR LOC(PIN)	SHOWN ON DRW#	REF	VALUE	TERMINATES SIGNAL
R56(1)	MBC5	B5	68Ω	%E12(1)
R60(1)	MBC5	B5	68Ω	%E12(2)
R21(1)	MBC1	B2	68Ω	%E17(15)
R75(1)	MBC3	D3	68Ω	%E20(15)
R110(1)	MBC1	A4	68Ω	%E23(15)
R112(1)	MBC2	B3	68Ω	%E24(15)
R66(1)	MBC2	A4	68Ω	%E27(2)
R65(1)	MBC2	A4	68Ω	%E27(5)
R11(1)	MBC3	B4	68Ω	%E28(15)
R109(1)	MBC2	A4	68Ω	%E28(2)
R14(1)	MBC2	B7	68Ω	%E29(14)
R8(1)	MBC2	C7	68Ω	%E29(2)
R59(1)	MBC2	C7	68Ω	%E29(3)
R143(1)	MBC5	A2	68Ω	%E32(2)
R16(1)	MBC2	B6	68Ω	%E34(14)
R64(1)	MBC2	B4	68Ω	%E34(6)
R32(1)	MBC3	C7	68Ω	%E40(14)
R35(1)	MBC3	C7	68Ω	%E40(15)
R206(1)	MBC2	D4	68Ω	%E40(6)
R27(1)	MBC4	C7	68Ω	%E41(14)
R36(1)	MBC4	C6	68Ω	%E41(2)
R37(1)	MBC4	C6	68Ω	%E41(3)
R105(1)	MBC3	A7	68Ω	%E42(2)
R38(1)	MBC5	A6	68Ω	%E43(2)
R28(1)	MBC3	C7	68Ω	%E44(15)
R13(1)	MBC3	B4	68Ω	%E46(15)
R31(1)	MBC3	A4	68Ω	%E46(2)
R9(1)	MBC3	C3	68Ω	%E49(15)
R7(1)	MBC3	D2	68Ω	%E5(2)
R33(1)	MBC4	D7	68Ω	%E50(14)
R34(1)	MBC4	D7	68Ω	%E50(3)
R120(1)	MBC4	C7	68Ω	%E53(3)
R119(1)	MBC4	C7	68Ω	%E53(6)
R19(1)	MBC2	B4	68Ω	%E54(15)
R84(1)	MBC3	D4	68Ω	%E55(2)
R76(1)	MBC3	D4	68Ω	%E55(3)
R93(1)	MBC4	B3	68Ω	%E55(7)
R80(1)	MBC3	D5	68Ω	%E56(13)
R156(1)	MBC5	A6	68Ω	%E56(4)
R50(1)	MBC4	A3	68Ω	%E60(3)

RESISTOR LOC(PIN)	SHOWN ON DRW#	REF	VALUE	TERMINATES SIGNAL
R67(1)	MBC3	B5	68Ω	%E60(6)
R131(1)	MBC4	A4	68Ω	%E64(2)
R128(1)	MBC4	B4	68Ω	%E65(14)
R30(1)	MBC3	A5	68Ω	%E65(2)
R88(1)	MBC4	B5	68Ω	%E65(3)
R3(1)	MBC3	D4	68Ω	%E65(9)
R201(1)	MBC4	D2	68Ω	%E67(15)
R167(1)	MBC2	C3	68Ω	%E67(6)
R205(1)	MBC4	D2	68Ω	%E67(9)
R129(1)	MBC4	B4	68Ω	%E70(14)
R92(1)	MBC4	C4	68Ω	%E70(2)
R166(1)	MBC4	C4	68Ω	%E70(3)
R165(1)	MBC2	D4	68Ω	%E72(15)
R164(1)	MBC2	D4	68Ω	%E73(15)
R133(1)	MBC4	C4	68Ω	%E74(2)
R89(1)	MBC4	A4	68Ω	%E74(7)
R49(1)	MBC4	A3	68Ω	%E75(14)
R15(1)	MBC2	B7	68Ω	-APR2 WR BAD A.R PAR H
R186(1)	MBC3	A7	68Ω	-CCL START MEM H
R113(1)	MBC1	C6	68Ω	CLK1 MBC H
R121(1)	MBC2	C5	68Ω	-CSH2 E CORE RD RQ B H
R61(1)	MBC2	D5	68Ω	CSH2 ONE WORD RD H
R69(1)	MBC3	B5	68Ω	-CSH2 RD PAUSE 2ND HALF H
R57(1)	MBC1	B4	68Ω	CSH3 ADR PMA EN H
R68(1)	MBC2	A5	68Ω	CSH3 ANY VAL HOLD A H
R99(1)	MBC1	C2	68Ω	CSH3 MATCH HOLD 1 IN H
R98(1)	MBC1	C2	68Ω	CSH3 MATCH HOLD 2 IN H
R118(1)	MBC2	C5	68Ω	-CSH4 CLEAR WR T0 H
R107(1)	MBC3	A2	68Ω	-CSH4 DATA CLR DONE H
R122(1)	MBC2	C5	68Ω	-CSH4 EBOX T3 H
R161(1)	MBC2	D4	68Ω	CSH4 EBOX WR T4 IN H
R187(1)	MBC3	A7	68Ω	-CSH5 CHAN RD T5 H
R18(1)	MBC2	C7	68Ω	-CSH5 CHAN T3 H
R171(1)	MBC2	D4	68Ω	CSH5 CHAN WR T5 IN H
R188(1)	MBC3	A7	68Ω	-CSH5 PAGE REFILL T9 H
R200(1)	MBC2	C4	68Ω	CSH6 CACHE WR IN H
R148(1)	MBC3	B2	68Ω	-CSH6 CHAN WR CACHE H
R174(1)	MBC2	D4	68Ω	CSH6 WR FROM MEM NXT H
R138(1)	MBC3	B2	68Ω	-E CACHE WR CYC H
R177(1)	MBC1	D8	68Ω	-LOAD EBUS REG H

RESISTOR LOC(PIN)	SHOWN ON DRW#	REF	VALUE	TERMINATES SIGNAL
R39(1)	MBC1	C5	68Ω	MBC1 CLK A H
R47(1)	MBC1	C5	68Ω	MBC1 CLK B H
R200(1)	MBC1	C5	68Ω	MBC1 CLK C H
R178(1)	MBC1	C5	68Ω	MBC1 CLK D H
R6(1)	MBC1	C5	68Ω	MBC1 CLK E H
R10(1)	MBC1	C5	68Ω	MBC1 CLK F H
R157(1)	MBC1	D7	68Ω	MBC1 EBUS REG 27 H
R180(1)	MBC1	D7	68Ω	MBC1 EBUS REG 28 H
R151(1)	MBC1	D7	68Ω	MBC1 EBUS REG 29 H
R154(1)	MBC1	D7	68Ω	MBC1 EBUS REG 30 H
R160(1)	MBC1	D6	68Ω	MBC1 EBUS REG 31 H
R195(1)	MBC1	D6	68Ω	MBC1 EBUS REG 32 H
R182(1)	MBC1	D6	68Ω	MBC1 EBUS REG 33 H
R140(1)	MBC1	C2	68Ω	MBC1 MATCH HOLD 1 H
R142(1)	MBC1	C2	68Ω	MBC1 MATCH HOLD 2 H
R100(1)	MBC1	C7	68Ω	MBC1 PMA 34 A H
R150(1)	MBC1	C7	68Ω	-MBC1 PMA 34 A H
R146(1)	MBC1	C7	68Ω	MBC1 PMA 35 A H
R145(1)	MBC1	C7	68Ω	-MBC1 PMA 35 A H
R101(1)	MBC1	D4	68Ω	MBC1 PMA HOLD 27 H
R97(1)	MBC1	D4	68Ω	MBC1 PMA HOLD 28 H
R95(1)	MBC1	D4	68Ω	MBC1 PMA HOLD 29 H
R96(1)	MBC1	D4	68Ω	MBC1 PMA HOLD 30 H
R139(1)	MBC1	D3	68Ω	MBC1 PMA HOLD 31 H
R136(1)	MBC1	D3	68Ω	MBC1 PMA HOLD 32 H
R137(1)	MBC1	D3	68Ω	MBC1 PMA HOLD 33 H
R106(1)	MBC1	C2	68Ω	MBC1 PMA HOLD 34 H
R102(1)	MBC1	C2	68Ω	MBC1 PMA HOLD 35 H
R79(1)	MBC1	D1	68Ω	MBC1 RESET H
R83(1)	MBC1	D1	68Ω	-MBC1 RESET H
R117(1)	MBC1	B1	68Ω	-MBC1 WRITE OK H
R22(1)	MBC1	B2	68Ω	MBC1 WRITE OK IN A H
R23(1)	MBC1	B2	68Ω	MBC1 WRITE OK IN B H
R159(1)	MBC2	C2	68Ω	MBC2 CACHE WR 00 A H
R179(1)	MBC2	C2	68Ω	MBC2 CACHE WR 09 A H
R152(1)	MBC2	C2	68Ω	MBC2 CACHE WR 18 A H
R155(1)	MBC2	C2	68Ω	MBC2 CACHE WR 27 A H
R123(1)	MBC2	D2	68Ω	MBC2 CSH ADR WR PLS FF H
R198(1)	MBC2	D2	68Ω	MBC2 CSH ADR WR PULSE H
R207(1)	MBC2	D2	68Ω	MBC2 CSH VAL WR PLS FF H

RESISTOR LOC(PIN)	SHOWN ON DRW#	REF	VALUE	TERMINATES SIGNAL
R114(1)	MBC2	D2	68Ω	MBC2 CSH VAL WR PULSE H
R149(1)	MBC2	C2	68Ω	MBC2 CSH WR DATA FF H
R204(1)	MBC2	D2	68Ω	MBC2 CSH WR WR PLS FF H
R196(1)	MBC2	D2	68Ω	MBC2 CSH WR WR PULSE H
R170(1)	MBC2	B6	68Ω	MBC2 FORCE BAD ADR PAR H
R48(1)	MBC2	B7	68Ω	MBC2 RQ HOLD H
R108(1)	MBC2	C6	68Ω	-MBC2 RQ HOLD FF H
R62(1)	MBC3	D7	68Ω	-MBC3 A CHANGE COMING H
R63(1)	MBC3	C7	68Ω	MBC3 A CHANGE COMING A H
R44(1)	MBC3	D7	68Ω	-MBC3 A CHANGE COMING B H
R87(1)	MBC3	D2	68Ω	MBC3 A PHASE H
R181(1)	MBC3	A1	68Ω	-MBC3 ANY SBUS RQ IN H
R24(1)	MBC3	C7	68Ω	MBC3 B CHANGE COMING H
R158(1)	MBC3	C7	68Ω	-MBC3 B CHANGE COMING H
R40(1)	MBC3	B7	68Ω	-MBC3 B CHANGE COMING A H
R4(1)	MBC3	D3	68Ω	MBC3 CLK A PHASE COMING H
R191(1)	MBC3	A3	68Ω	MBC3 CORE BUSY H
R105(1)	MBC3	C2	68Ω	-MBC3 FIRST WD ADR SEL H
R115(1)	MBC3	C2	68Ω	-MBC3 INH 1ST MB REQ H
R73(1)	MBC3	C4	68Ω	MBC3 MEM START CLR H
R74(1)	MBC3	B6	68Ω	-MBC3 MEM START SET H
R20(1)	MBC3	D1	68Ω	MBC3 PHASE CHANGE COMING H
R55(1)	MBC3	A5	68Ω	MBC3 RD PAUSE 2ND HALF H
R46(1)	MBC4	A1	68Ω	MBC4 ADR 34 H
R168(1)	MBC4	A1	68Ω	MBC4 ADR 35 H
R132(1)	MBC4	C4	68Ω	MBC4 ANY REQUEST
R90(1)	MBC4	C3	68Ω	-MBC4 ANY RQS LEFT H
R153(1)	MBC4	B6	68Ω	-MBC4 CORE DATA VALID -2 H
R85(1)	MBC4	A6	68Ω	-MBC4 CORE DATA VALID A H
R135(1)	MBC4	A6	68Ω	-MBC4 CORE RD IN PROG H
R192(1)	MBC4	A6	68Ω	MBC4 CORE RD IN PROG A H
R29(1)	MBC4	B2	68Ω	MBC4 INIT COMP H
R82(1)	MBC4	B2	68Ω	-MBC4 INIT COMP H
R25(1)	MBC4	C7	68Ω	MBC4 LAST ACKN H
R72(1)	MBC4	C7	68Ω	-MBC4 LAST ACKN H
R78(1)	MBC4	C6	68Ω	MBC4 LAST ACKN SEEN H
R26(1)	MBC4	C6	68Ω	-MBC4 LAST ACKN SEEN H
R12(1)	MBC4	D6	68Ω	MBC4 MEM START H
R71(1)	MBC4	D6	68Ω	-MBC4 MEM START A H
R70(1)	MBC4	D6	68Ω	-MBC4 MEM START B H

NOTE:

1. ALL TERMINATORS HAVE PIN TWO CONNECTED TO -2.0V AND ARE 5% 1/4WATT UNLESS OTHERWISE SPECIFIED
2. ENTRIES ARE SORTED BY SIGNAL NAME
3. % INDICATES OUTPUT OF DIP LOC AND
   ( ) INDICATES PIN NUMBER

"THIS DRAWING AND SPECIFICATIONS, HEREIN, ARE THE PROPERTY OF DIGITAL EQUIPMENT CORPORATION AND SHALL NOT BE REPRODUCED OR COPIED OR USED IN WHOLE OR IN PART AS THE BASIS FOR THE MANUFACTURE OR SALE OF ITEMS WITHOUT WRITTEN PERMISSION.
COPYRIGHT © 1976, DIGITAL EQUIPMENT CORPORATION"

REVISIONS		
CHK	CHANGE NO.	REV

digital

DR: P. Smith DATE 18-NOV-76
CHK: E. Stephenson DATE 11/17/76
ENG: J. D. Allen DATE 23 Nov 76
BOARD LOCATION: 4AE22
SHEET 1 OF 2
F85311.DRW[4,175] 18-NOV-76 17:15
NEXT HIGHER ASSEMBLY: B-DD-M8531-YA
FIRST USED ON OPTION/MODEL: KL10PV

TITLE: MBC MBOX CONTROL TERMINATORS

SIZE	CODE	NUMBER	REV.
D	CS	M8531-YA-RES	

195 MR

RESISTOR LOC(PIN)	SHOWN ON DRW#	REF	VALUE	TERMINATES SIGNAL
R130(1)	MBC4	B3	68Ω	MBC4 MEM START RD H
R94(1)	MBC4	B3	68Ω	-MBC4 MEM START RD H
R169(1)	MBC4	D1	68Ω	MBC4 PMA ADR PAR HOLD H
R91(1)	MBC4	D3	68Ω	MBC4 RQ 0A H
R86(1)	MBC4	C4	68Ω	MBC4 RQ 0B H
R172(1)	MBC4	D3	68Ω	MBC4 RQ 1A H
R175(1)	MBC4	D3	68Ω	MBC4 RQ 2A H
R173(1)	MBC4	D3	68Ω	MBC4 RQ 3A H
R183(1)	MBC5	C7	68Ω	MBC5 CORE BUSY B H
R189(1)	MBC5	C7	68Ω	MBC5 DIAG 04 H
R190(1)	MBC5	C7	68Ω	MBC5 DIAG 05 H
R197(1)	MBC5	B7	68Ω	MBC5 DIAG 06 H
R194(1)	MBC5	B7	68Ω	-MBC5 DIAG READ FUNC 16X H
R141(1)	MBC5	A5	68Ω	MBC5 HOLD MATCH H
R147(1)	MBC5	A2	68Ω	-MBX1 CCA ALL PAGES CYC H
R176(1)	MBC2	D4	68Ω	MBX1 CCA INVAL T4 A H
R111(1)	MBC5	A3	68Ω	-MBX1 FORCE MATCH EN H
R183(1)	MBC1	B4	68Ω	MBX1 REFILL ADR EN H
R17(1)	MBC2	C7	68Ω	-MBX2 CHAN WR CYC H
R53(1)	MBC1	B2	68Ω	MBX3 REFILL HOLD H
R81(1)	MBC3	B5	68Ω	-MBX4 CACHE TO MB T2 H
R184(1)	MBC3	B7	68Ω	-MBX4 CACHE TO MB T4 A H
R209(1)	MBC2	D4	68Ω	MBX4 WRITEBACK T2 H
R199(1)	MBC4	D2	68Ω	MBX5 MEM RD RQ IN H
R116(1)	MBC3	A2	68Ω	-MBX5 MEM TO C EN H
R203(1)	MBC4	D2	68Ω	MBX5 MEM WR RQ IN H
R124(1)	MBC4	D5	68Ω	MBX5 RQ 0 IN H
R125(1)	MBC4	D5	68Ω	MBX5 RQ 1 IN H
R127(1)	MBC4	D5	68Ω	MBX5 RQ 2 IN H
R134(1)	MBC4	D5	68Ω	MBX5 RQ 3 IN H
R163(1)	MBC4	C8	68Ω	MEM ACKN A H
R162(1)	MBC4	C8	68Ω	MEM ACKN B H
R45(1)	MBC4	B7	68Ω	-MEM DATA VALID A H
R43(1)	MBC4	B7	68Ω	-MEM DATA VALID B H
R193(1)	MBC4	A7	68Ω	NC SEE NOTE 4
R77(1)	MBC4	C8	68Ω	NXM ACKN H
R41(1)	MBC4	B7	68Ω	-NXM DATA VAL H
R52(1)	MBC1	B2	68Ω	PMA3 PA 27 H
R51(1)	MBC1	B2	68Ω	PMA3 PA 28 H
R50(1)	MBC1	B2	68Ω	PMA3 PA 29 H

RESISTOR LOC(PIN)	SHOWN ON DRW#	REF	VALUE	TERMINATES SIGNAL
R54(1)	MBC1	B2	68Ω	PMA3 PA 30 H
R1(1)	MBC1	A2	68Ω	PMA3 PA 31 H
R104(1)	MBC1	C8	68Ω	PMA4 34 B H
R144(1)	MBC1	C8	68Ω	PMA4 35 B H
R202(1)	MBC4	D2	68Ω	PMA4 ADR PAR H
R2(1)	MBC1	A2	68Ω	PMA4 PA 32 H
R5(1)	MBC1	A2	68Ω	PMA4 PA 33 H

NOTE:

1. ALL TERMINATORS HAVE PIN TWO CONNECTED TO -2.0V AND ARE 5% 1/4WATT UNLESS OTHERWISE SPECIFIED
2. ENTRIES ARE SORTED BY SIGNAL NAME
3. % INDICATES OUTPUT OF DIP LOC AND
   ( ) INDICATES PIN NUMBER
4. R193 IS NOT TO BE USED OR INSTALLED

"THIS DRAWING AND SPECIFICATIONS, HEREIN, ARE THE PROPERTY OF DIGITAL EQUIPMENT CORPORATION AND SHALL NOT BE REPRODUCED OR COPIED OR USED IN WHOLE OR IN PART AS THE BA"IS ,"OR THE MANUFACTURE OR SALE OF ITEMS WITHOUT WRITTEN PERMISSION.
COPYR"GHT © 1976, DIGITAL EQUIPMENT CORPORATION"

REVISIONS		
CH.	CHANGE NO.	REV

digital

DR: C. Smith DATE 10-NOV-76
CHK'D: W. Stephens DATE 11-11-76
ENG: J. Allen DATE 23 Nov 76
BOARD LOCATION: 4AFZ2
SHEET 2 OF 2
F85312.DRW(4,175) 10-NOV-76 17:16
FIR"T USED ON OPTION/MODEL: KL10PV
NEXT HIGHER ASSEMBLY: B-DD-M8531-YA

TITLE: MBC MBOX CONTROL TERMINATORS

SIZE	CODE	NUMBER	REV.
D	CS	M8531-YA-RES	

MR

196

DRAWING NUMBER	PAGES	PART NO.	DESCRIPTION	REVISIONS								
			FILE: ORIGINAL LAYOUT									
			ECO NUMBER		1	1A	2	3	3A	4	5	6
			MODULE REVISION	A	B	B	C	D	D	D	D	D1
D-UA-M8532-0-0	8		PI LOGIC BOARD	*	A	A	B	C	C	D	D1	D2
K-PL-M8532-0-DBP	2		PI LOGIC BOARD	*	*	*	*	*	*	*	*	D2
D-CS-M8532-0-PIC1	1		PRIORITY INTERRUPT REG.	*	*	*	A	A	A	A	A1	A1
D-CS-M8532-0-PIC2	1		PRIORITY INTERRUPT DEVICE SELECTION	*	*	*	A	B	B	B	B1	B2
D-CS-M8532-0-PIC3	1		PRIORITY INTERRUPT CHANNELS	*	A	A	B	C	C	C	C1	C1
D-CS-M8532-0-PIC4	1		PRIORITY INTERRUPT EBUS INTERFACE	*	*	*	A	B	B	B	B1	B1
D-CS-M8532-0-PIC5	1		PRIORITY INTERRUPT CONTROL	*	*	*	A	B	B	B	B1	B2
D-CS-M8532-0-PIC6	1		POWER. GND. CAPS.	*	*	*	A	A	A	A	A1	A1
D-CS-M8532-0-RES	1		TERMINATORS	*	*	*	A	B	B	B	B1	B1
D-AH-M8532-0-5	4		PI LOGIC BOARD	A	A	A	A	A	A	A	A	A
		5010829	ETCH CIRCUIT BOARD	B	B	B	B	B	B	B	B	B
K-CO-M8532-0-4	1		PI LOGIC BOARD	B	B	B	B	B	B	B	B	B
POO-M8532-00			PROCESS SHEET (REF ONLY)									

NOTES:

ECO 1A SUPPLEMENT

ECO 3A SUPPLEMENT

"THIS DRAWING AND SPECIFICATIONS, HEREIN, ARE THE PROPERTY OF DIGITAL EQUIPMENT CORPORATION AND SHALL NOT BE REPRODUCED OR COPIED OR USED IN WHOLE OR IN PART AS THE BASIS FOR THE MANUFACTURE OR SALE OF ITEMS WITHOUT WRITTEN PERMISSION. COPYRIGHT © 1978, DIGITAL EQUIPMENT CORPORATION"

REVISIONS		
CHK	CHANGE NO.	REV
	M8532-MR006	F
L. BALES		

digital

DRN. J. Toomey DATE 24-OCT-78 ENG. W. BRUCKERT DATE 1-24-75
CHK'D. G.FLANDERS DATE 1-27-75 BOARD LOCATION: N/A
SHEET 1 OF 2
DSK:8532DD.T2P[4,615] 24-OCT-78 13:47 NEXT HIGHER ASSEMBLY:
FIRST USED ON OPTION/MODEL: KL10 NONE

TITLE: PI LOGIC BOARD

SIZE	CODE	NUMBER	REV.
D	DD	M8532-0	F

MR

147

This drawing and specifications, herein, are the property of Digital Equipment Corporation and shall not be reproduced or copied or used in whole or in part as the basis for the manufacture or sale of items without written permission. COPYWRIGHT © 1975

DIGITAL EQUIPMENT CORP.

REWORK INSTRUCTIONS

ECO #2 = ◯

DELETES SIDE 1 AS SHOWN:
1. DELETE WIRE ITEM(26) FROM E7(12) TO E8(11); #4 WIRE OF PREVIOUS E.C.O.
2. DELETE WIRE ITEM(26) FROM E8(11) TO E9(4); #5 WIRE OF PREVIOUS E.C.O.
3. DELETE R79
4. DELETE R126
5. DELETE R121
6. DELETE R184

ETCH CUTS SIDE 1 AS SHOWN:
1. CUT ETCH AT E37(12).
2. CUT ETCH TO LEFT OF E6(16).
3. CUT ETCH RUNNING BETWEEN E12(15) AND E12(16).
4. CUT ETCH AT E15(11).

ETCH CUTS SIDE 2 AS SHOWN:
1. CUT ETCH AT E8(10).
2. CUT ETCH AT P.T.H. TO RIGHT OF E7(16).
3. CUT ETCH AT E8(14).
4. CUT ETCH AT E15(15).
5. CUT ETCH TO THE LEFT OF E13(11).
6. CUT ETCH AT E43(11).
7. CUT ETCH AT E7(5).
8. CUT ETCH AT E37(12).

COMPONENT ADDS SIDE 1 AS SHOWN:
1. ADD DEC 10104 (ITEM 8) TO SPARE AT E5.
2. ADD R296 (ITEM 27) WRAP LEAD OF R296 AROUND LEAD OF R262 & SOLDER. CUT OTHER END OF R296 1/4 IN.
3. ADD R297 (ITEM 27) WRAP LEAD OF R297 AROUND LEAD OF R2 & SOLDER. CUT OTHER END OF R297 1/4 IN.
4. ADD R298 (ITEM 27) WRAP LEAD OF R298 AROUND LEAD OF R2 & SOLDER. CUT OTHER END OF R298 1/4 IN.

WIRE ADDS SIDE 1 AS SHOWN:
1. ADD WIRE (ITEM 30) E37(12) TO E37(13).
2. ADD WIRE (ITEM 30) E7(5) TO E6(14).
3. ADD WIRE (ITEM 30) E15(15) TO E8(10).
4. ADD WIRE (ITEM 30) E19(5) TO E8(11).
5. ADD WIRE (ITEM 30) E8(14) TO E13(10).
6. ADD WIRE (ITEM 30) E12(2) TO E15(11).
7. ADD TWP (ITEM 31)
   A. WHITE WIRE TO E5(2).
   B. GREEN WIRE TO E5(16).
   C. WHITE WIRE TO E7(5).
   D. GREEN WIRE TO E7(1).
8. ADD TWP (ITEM 31)
   A. WHITE WIRE TO PTH ABOVE E7.
   B. GREEN WIRE TO E7(16).
   C. WHITE WIRE TO E5(4).
   D. GREEN WIRE TO E5(1).
9. ADD TWP (ITEM 31).
   A. WHITE WIRE TO PTH TO THE LEFT OF R125.
   B. GREEN WIRE TO E23(16).
   C. WHITE WIRE TO E5(5).
   D. GREEN WIRE TO E5(1).
10. ADD TWP (ITEM 31)
   A. WHITE WIRE TO E43(11).
   B. GREEN WIRE TO E43(16).
   C. WHITE WIRE TO E8(11).
   D. GREEN WIRE TO E8(16).
11. ADD TWP (ITEM 31).
   A. WHITE WIRE TO E7(12).
   B. GREEN WIRE TO E7(16).
   C. WHITE WIRE TO E9(4).
   D. GREEN WIRE TO E9(1).
12. ADD WIRE (ITEM 30) FROM 1/4 IN LEAD OF R296 TO E43(11).
13. ADD WIRE (ITEM 30) FROM 1/4 IN LEAD OF R297 TO E5(4).
14. ADD WIRE (ITEM 30) FROM 1/4 IN LEAD OF R298 TO E5(5).

ECO #3 = △

DELETE COMPONENTS SIDE 1 AS SHOWN.
1. REMOVE R85 ONLY IF BOARD IS SOLDERED.

ETCH CUTS SIDE 1 AS SHOWN:
1. AT PTH BELOW AND RIGHT OF E53(9).
2. AT E43(12).
3. AT PTH BELOW AND TO LEFT OF E11(8).
4. ETCH RUNNING FROM E13(4) TO R117 AT R117.
5. CUT ETCH RUNNING BELOW E19(8).
6. CUT ETCH UNDER R85 COMING LEFT FROM SECOND PTH OF E24(4).

ETCH CUTS SIDE 2 AS SHOWN:
1. AT E15(12).
2. AT E43(12).
3. AT PTH BELOW AND TO LEFT OF E47(9).

COMPONENTS ADDS SIDE 1 AS SHOWN:
1. ADD R85 ONLY IF BOARD IS SOLDERED.

WIRE ADDS SIDE 1 AS SHOWN: (9105740-55)
1. FROM E24(4) TO E19(7).
2. FROM E43(12) TO E43(13).

TWISTED PAIR WIRE ADDS SIDE 1 AS SHOWN: (9107766-59)
3. A. GRN FROM E53(16) TO E37(1). DO NOT SOLDER.
   B. WHT FROM PTH BELOW AND TO RIGHT OF E53(9) TO E37(4). DO NOT SOLDER.
4. A. GRN FROM E37(1) TO E11(1).
   B. WHT FROM E37(4) TO PTH BELOW AND TO LEFT OF E11(8).
5. A. GRN FROM E43(16) TO E13(1).
   B. WHT FROM E43(9) TO E13(4).
6. A. GRN FROM E15(16) TO E18(16).
   B. WHT FROM E15(12) TO R117.

ECO #4 = ⬭
DOC CHANGE ONLY

QTY	REF DESIGNATION	DESCRIPTION	PART NO.	ITEM NO.

PARTS LIST

FIRST USED ON OPTION/MODLE: KL10

ETCH BOARD REV

CHANGE NO.	REV	REVISIONS

DEC NO.	EIA NO.	DEC NO.	EIA NO.

SEMICONDUCTOR CONVERSION CHART

DRN. R.W. COUNTER	DATE 2-10-74	digital EQUIPMENT CORPORATION MAYNARD, MASSACHUSETTS
CHK'D. G. FLANDERS	DATE 1-27-75	TITLE PI LOGIC BOARD
ENG. W. BRUCKERT	DATE 1-24-75	
PROJ. ENG. W. BRUCKERT	DATE 1-24-75	
PROD. E. RECZEK	DATE 1-27-75	
NEXT HIGHER ASSY B-DD-M8532-0		
SCALE —		SIZE D CODE UA NUMBER M8532-0-0 REV. D2
SHEET 2 OF 8		DIST.

RW NO. 8 7 6 5 4 3 2 1

MR

198

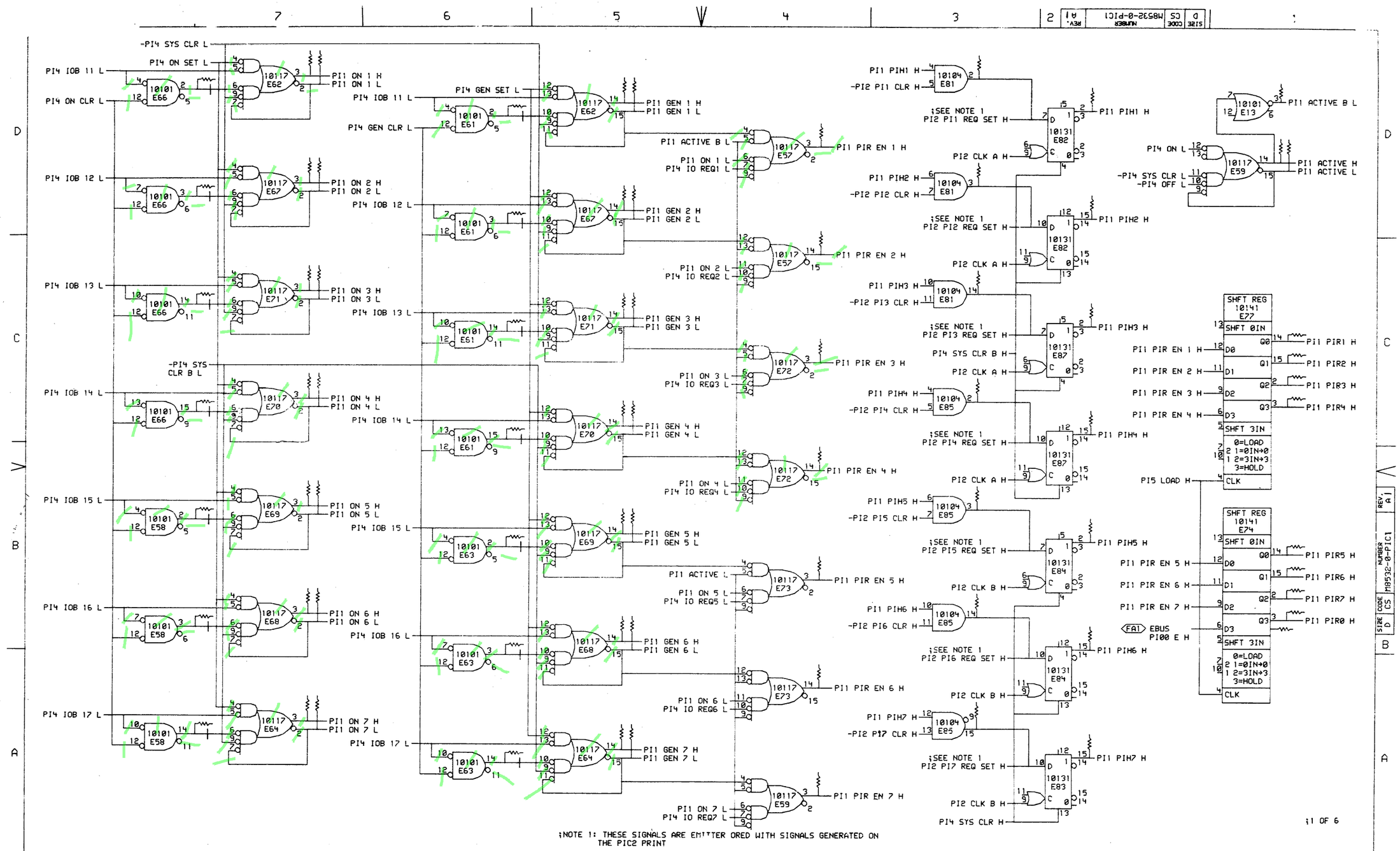

;NOTE 1: THESE SIGNALS ARE EMITTER ORED WITH SIGNALS GENERATED ON THE PIC2 PRINT

"THIS DRAWING AND SPECIFICATIONS, HEREIN, ARE THE PROPERTY OF DIGITAL EQUIPMENT CORPORATION AND SHALL NOT BE REPRODUCED OR COPIED OR USED IN WHOLE OR IN PART AS THE BASIS FOR THE MANUFACTURE OR SALE OF ITEMS WITHOUT PERMISSION. COPYRIGHT © 1975 DIGITAL EQUIPMENT CORPORATION"

REVISIONS			M8532-0005 A1
CHK	CHANGE NO.	REV	
-	M8532-00002	A	J. CALVO
	W. BRUCKERT		

DRN. L. Foody 5/12/75 | ENG. W. Bruckert 5/12/75 | DATE 5/12/75 | TITLE: PRIORITY INTERRUPT REGISTERS

CHK D. Stephenson 6/30/75 | DATE | BOARD LOCATION: 4AF31 | SHEET 1 OF 1

PI1EX(4,120) 28-APR-75 07:26 | NEXT HIGHER ASSEMBLY: B-DD-M8532-0

FIRST USED ON OPTION/MODEL: KL10

SIZE	CODE	NUMBER	REV.
D	CS	M8532-0-PIC1	A1

199

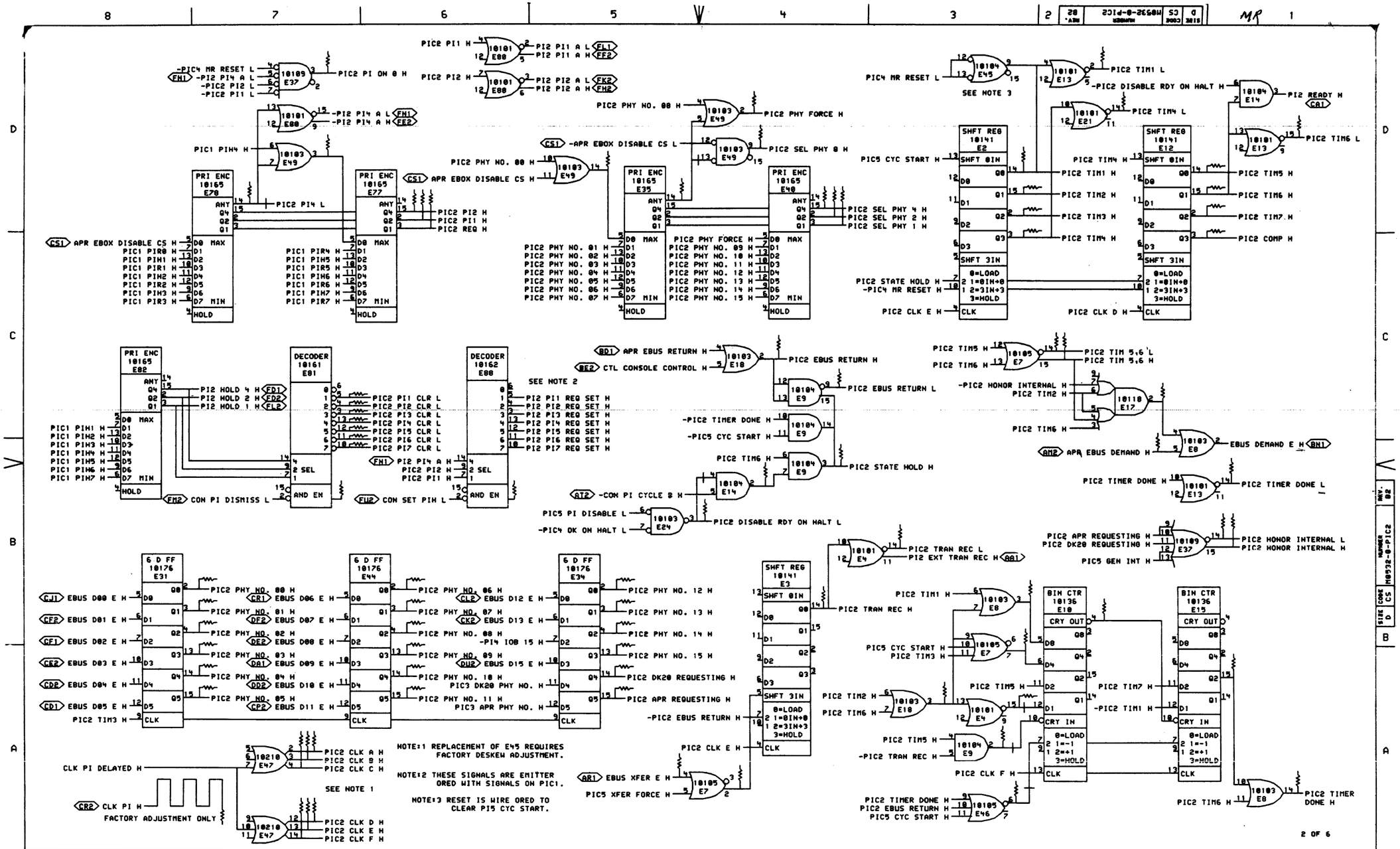

"THIS DRAWING AND SPECIFICATIONS, HEREIN, ARE THE PROPERTY OF DIGITAL EQUIPMENT CORPORATION AND SHALL NOT BE REPRODUCED OR COPIED OR USED IN WHOLE OR IN PART AS THE BASIS FOR THE MANUFACTURE OR SALE OF ITEMS WITHOUT WRITTEN PERMISSION. COPYRIGHT © 1978, DIGITAL EQUIPMENT CORPORATION"

REVISIONS		
CHK	CHANGE NO.	REV
	M8532-NR6	B2
L. BALES		

digital

DRN: K. Toomey DATE 21-JUL-78
CHK'D: M. Mc DATE 27 JUL 78
ENG. L. Bales DATE 10-27-78
BOARD LOCATION: 4AF31
SHEET 1 OF 1
MODULE:<M8532>PIC2R.DRW [21-JUL-78 13:03]
FIRST USED ON OPTION/MODEL: KL10
NEXT HIGHER ASSEMBLY: B-DD-M8532-0

TITLE: PRIORITY INTERRUPT DEVICE SELECTION

SIZE	CODE	NUMBER	REV.
D	CS	M8532-0-PIC2	B2

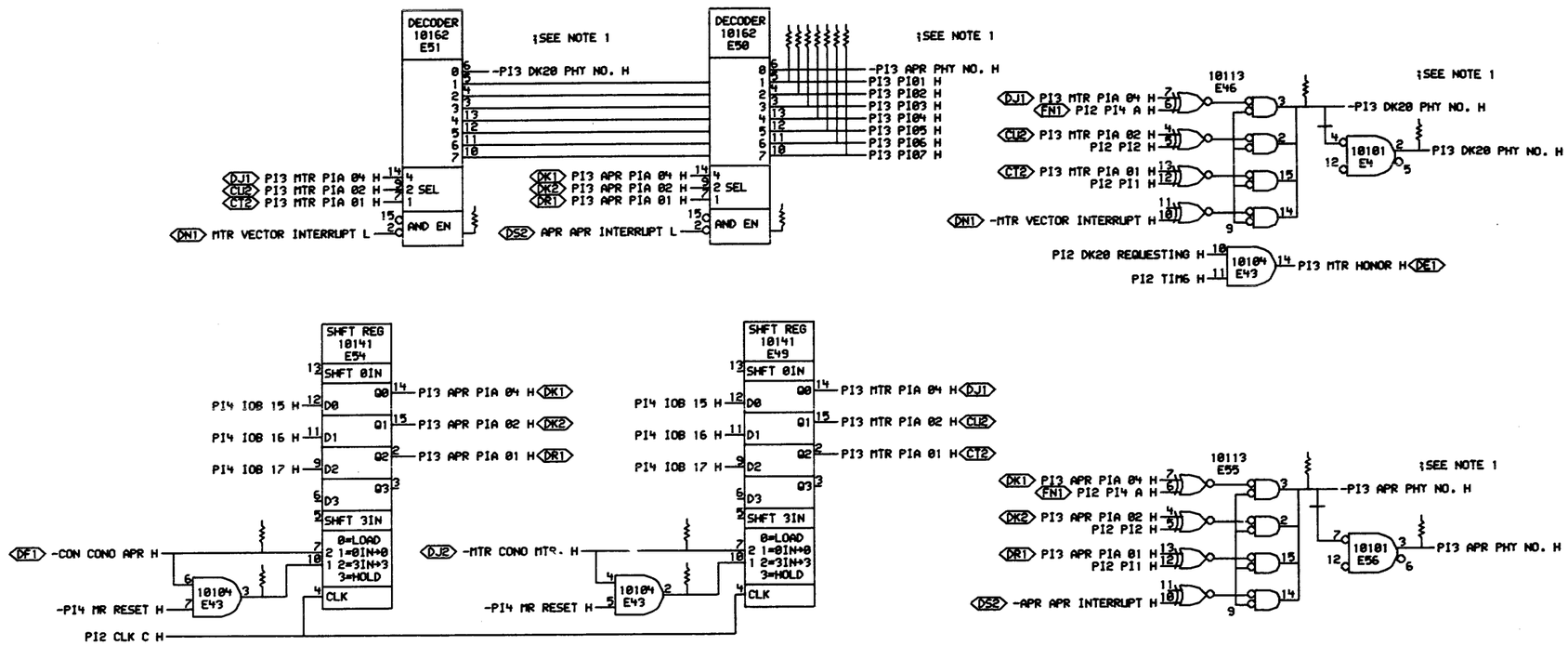

;3 OF 6

"THIS DRAWING AND SPECIFICATIONS, HEREIN, ARE THE PROPERTY OF DIGITAL EQUIPMENT CORPORATION AND SHALL NOT BE REPRODUCED OR COPIED OR USED IN WHOLE OR IN PART - AS THE BASIS FOR THE MANUFACTURE OR SALE OF ITEMS WITHOUT WRITTEN PERMISSION.
COPYRIGHT © 1975, DIGITAL EQUIPMENT CORPORATION"

REVISIONS			M8532-0005	C1
CHK	CHANGE NO.	REV	Burt A. Hunt 30CT77	
	M8532-00003	C	J. CALVO	
	W. BRUCKERT			

digital

DRN. L. Loosley	DATE 03-DEC-75	ENG. N. Bruckert	DATE 11/29/76
CHK. W. Stephenson	DATE 12/9/75	BOARD LOCATION: 4AE31	SHEET 1 OF 1
PI3EX.DRW(4,120) 04-NOV-75 10:26		NEXT HIGHER ASSEMBLY:	
FIRST USED ON OPTION/MODEL: KL10		B-DD-M8532-0	

TITLE: PRIORITY INTERRUPT CHANNELS

SIZE	CODE	NUMBER	REV.
D	CS	M8532-0-PIC3	C1

201

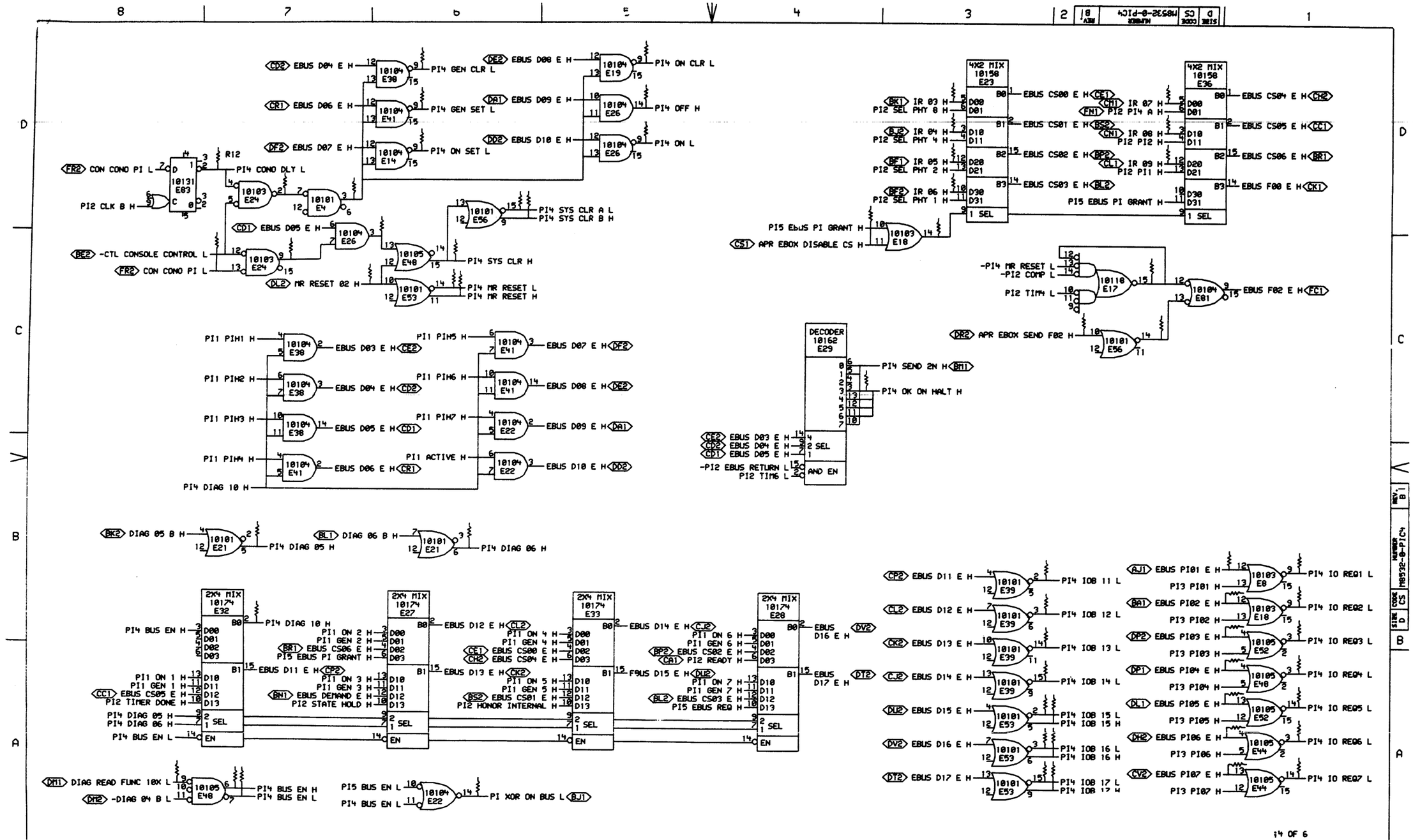

"THIS DRAWING AND SPECIFICATIONS, HEREIN, ARE THE PROPERTY OF DIGITAL EQUIPMENT CORPORATION AND SHALL NOT BE REPRODUCED OR COPIED OR USED IN WHOLE OR IN PART AS THE BASIS FOR THE MANUFACTURE OR SALE OF ITEMS WITHOUT WRITTEN PERMISSION.
COPYRIGHT © 1975, DIGITAL EQUIPMENT CORPORATION"

REVISIONS			M8532-0005 B1
CHK	CHANGE NO.	REV	Bruce A. Hunt 3 OCT 77
	M8532-00003	B	J. CALVO
			W. BRUCKERT

digital

DRN. J. Cooney DATE 03-DEC-75 ENG. R. Bruckert DATE 1/24/76
CHK'D. W. Bruckert DATE 12/4/75 BOARD LOCATION: 4AF31 SHEET 1 OF 1
P14EX.DRW[4,120] 08-NOV-75 10:27 NEXT HIGHER ASSEMBLY: B-DD-M8532-0
FIRST USED ON CPU-MODEL: KL10

TITLE: PRIORITY INTERRUPT EBUS INTERFACE

SIZE	CODE	NUMBER	REV.
D	CS	M8532-0-PIC4	B1

202

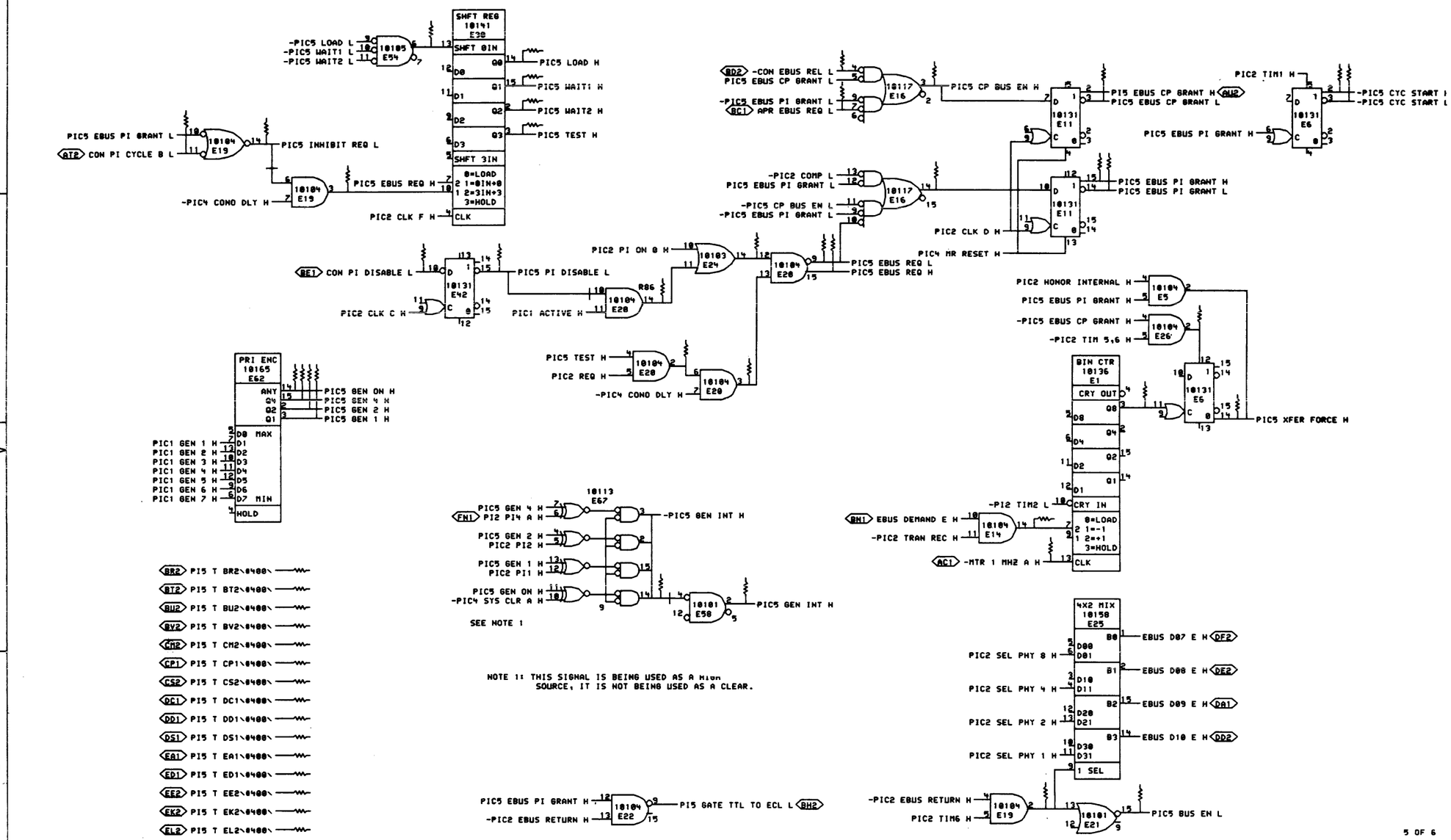

NOTE 1: THIS SIGNAL IS BEING USED AS A High SOURCE, IT IS NOT BEING USED AS A CLEAR.

5 OF 6

"THIS DRAWING AND SPECIFICATIONS, HEREIN, ARE THE PROPERTY OF DIGITAL EQUIPMENT CORPORATION AND SHALL NOT BE REPRODUCED OR COPIED OR USED IN WHOLE OR IN PART AS THE BASIS FOR THE MANUFACTURE OR SALE OF ITEMS WITHOUT WRITTEN PERMISSION. COPYRIGHT © 1979, DIGITAL EQUIPMENT CORPORATION"

REVISIONS		
CHK	CHANGE NO.	REV
	M8532-MR6	B2

digital

MODULE: <M8532>PI5ER.DRW 21-JUL-78 13:03
FIRST USED ON OPTION/MODEL: KL10

DRN: J. Cooney DATE 21-JUL-78
CHK'D: DATE 23-JUL-78
ENG: J. Baker DATE 10-27-78
BOARD LOCATION: 4AF31
SHEET 1 OF 1
NEXT HIGHER ASSEMBLY: B-DD-M8532-0

TITLE: PRIORITY INTERRUPT CONTROL

SIZE	CODE	NUMBER	REV.
D	CS	M8532-0-PIC5	B2

203

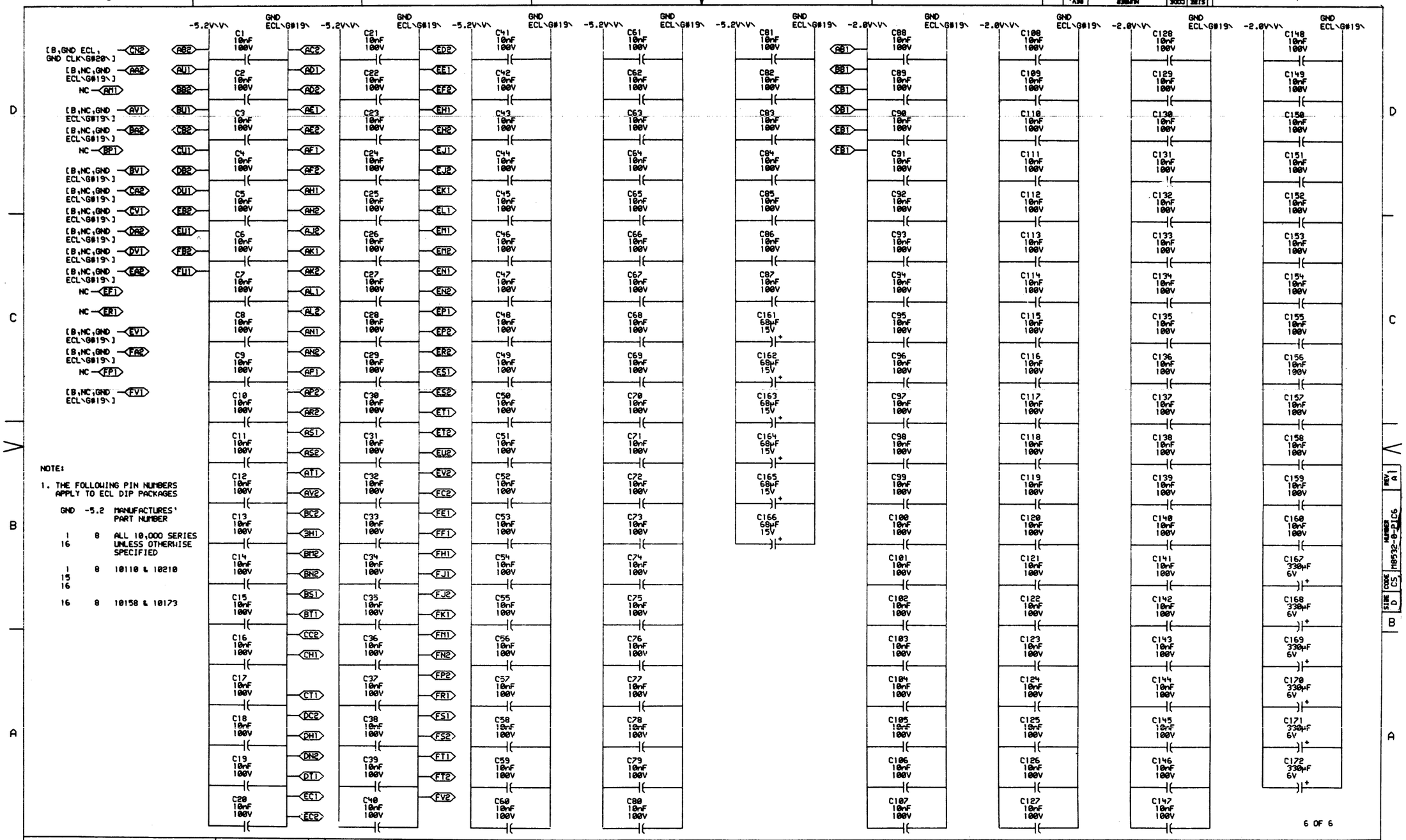

NOTE:

1. THE FOLLOWING PIN NUMBERS APPLY TO ECL DIP PACKAGES

GND	-5.2	MANUFACTURES' PART NUMBER
1 16	8	ALL 10,000 SERIES UNLESS OTHERWISE SPECIFIED
1 15 16	8	10110 & 10210
16	8	10158 & 10173

"THIS DRAWING AND SPECIFICATIONS, HEREIN, ARE THE PROPERTY OF DIGITAL EQUIPMENT CORPORATION AND SHALL NOT BE REPRODUCED OR COPIED OR USED IN WHOLE OR IN PART AS THE BASIS FOR THE MANUFACTURE OR SALE OF ITEMS WITHOUT WRITTEN PERMISSION. COPYRIGHT © 1975, DIGITAL EQUIPMENT CORPORATION"

REVISIONS		
CHK	CHANGE NO.	REV
	M8532-00002	A
	W.BRUCKERT	

M8532-0005 A1
J. CALVO

digital

DRN. 5/12/75 | ENG. 5/12/75 | CHK 5/30/75 | DATE | BOARD LOCATION: 4F31 | SHEET 1 OF 1
PI6EX4,120] 28-APR-75 02:39 | NEXT HIGHER ASSEMBLY: B-DD-M8532-0
FIRST USED ON OPTION/MODEL: KL10

TITLE: PRIORITY INTERRUPT POWER, GND, CAPS

SIZE	CODE	NUMBER	REV.
D	CS	M8532-0-PIC6	A1

204

RESISTOR LOC(PIN)	SHOWN ON DRW#	REF	VALUE	TERMINATES SIGNAL
R232(1)	PI5EX	C2	68Ω	%E1(3)
R8(1)	PI2EX	B2	68Ω	%E10(4)
R230(1)	PI5EX	B3	68Ω	%E14(14)
R75(1)	PI2EX	B4	68Ω	%E14(2)
R114(1)	PI2EX	A1	68Ω	%E15(15)
R235(1)	PI5EX	D3	68Ω	%E16(14)
R161(1)	PI4EX	C2	68Ω	%E17(15)
R118(1)	PI2EX	C2	68Ω	%E17(2)
R260(1)	PI4EX	C3	68Ω	%E18(14)
R69(1)	PI2EX	B3	68Ω	%E18(3)
R237(1)	PI5EX	A3	68Ω	%E19(2)
R15(1)	PI5EX	D7	68Ω	%E19(3)
R88(1)	PI5EX	C5	68Ω	%E20(14)
R13(1)	PI5EX	C5	68Ω	%E20(2)
R10(1)	PI5EX	C4	68Ω	%E20(3)
R14(1)	PI5EX	C5	68Ω	%E24(14)
R85(1)	PI4EX	D7	68Ω	%E24(2)
R248(1)	PI4EX	C7	68Ω	%E24(9)
R231(1)	PI5EX	C2	68Ω	%E26(2)
R268(1)	PI4EX	C6	68Ω	%E26(3)
R40(1)	PI2EX	D5	68Ω	%E35(14)
R4(1)	PI2EX	A3	68Ω	%E4(15)
R243(1)	PI4EX	D7	68Ω	%E4(3)
R205(1)	PI3EX	B5	68Ω	%E43(2)
R199(1)	PI3EX	B7	68Ω	%E43(3)
R7(1)	PI2EX	A3	68Ω	%E44(6)
R20(1)	PI2EX	D5	68Ω	%E47(14)
R157(1)	PI2EX	D7	68Ω	%E47(3)
R16(1)	PI5EX	D6	68Ω	%E52(6)
R163(1)	PI4EX	C2	68Ω	%E56(14)
R210(1)	PI1EX	A7	68Ω	%E58(14)
R214(1)	PI1EX	B7	68Ω	%E58(2)
R202(1)	PI1EX	B7	68Ω	%E58(3)
R100(1)	PI1EX	C6	68Ω	%E61(14)
R153(1)	PI1EX	C6	68Ω	%E61(15)
R49(1)	PI1EX	D6	68Ω	%E61(2)
R56(1)	PI1EX	D6	68Ω	%E61(3)
R212(1)	PI1EX	A6	68Ω	%E63(14)
R216(1)	PI1EX	B6	68Ω	%E63(2)
R203(1)	PI1EX	B6	68Ω	%E63(3)

RESISTOR LOC(PIN)	SHOWN ON DRW#	REF	VALUE	TERMINATES SIGNAL
R99(1)	PI1EX	C7	68Ω	%E66(14)
R154(1)	PI1EX	C7	68Ω	%E66(15)
R55(1)	PI1EX	D7	68Ω	%E66(2)
R59(1)	PI1EX	D7	68Ω	%E66(3)
R113(1)	PI2EX	A4	68Ω	%E7(2)
R5(1)	PI2EX	A2	68Ω	%E7(7)
R6(1)	PI2EX	B2	68Ω	%E8(3)
R2(1)	PI2EX	A3	68Ω	%E9(2)
R147(1)	PI3EX	C5	68Ω	-APR APR INTERRUPT H
R125(1)	PI4EX	D4	68Ω	APR EBOX DISABLE CS H
R97(1)	PI4EX	C2	68Ω	APR EBOX SEND F02 H
R120(1)	PI2EX	B2	68Ω	APR EBUS DEMAND H
R240(1)	PI5EX	D4	68Ω	-APR EBUS REQ H
R146(1)	PI2EX	A7	68Ω	CLK PI H
R200(1)	PI3EX	B7	68Ω	-CON CONO APR H
R84(1)	PI4EX	C7	68Ω	-CON CONO PI H
R238(1)	PI5EX	D4	68Ω	CON EBUS REL H
R70(1)	PI5EX	D7	68Ω	-CON PI CYCLE B H
R295(1)	PI2EX	B5	68Ω	-CON PI DISABLE H
R158(1)	PI2EX	B7	68Ω	-CON PI DISMISS H
R164(1)	PI2EX	B6	68Ω	-CON SET PIH H
R270(1)	PI4EX	A8	68Ω	-DIAG READ FUNC 10X H
R210(1)	PI1EX	B1	68Ω	EBUS PI00 E H
R116(1)	PI4EX	B1	68Ω	EBUS PI01 E H
R124(1)	PI4EX	B1	68Ω	EBUS PI02 E H
R39(1)	PI4EX	B1	68Ω	EBUS PI03 E H
R267(1)	PI4EX	A1	68Ω	EBUS PI04 E H
R30(1)	PI4EX	A1	68Ω	EBUS PI05 E H
R193(1)	PI4EX	A1	68Ω	EBUS PI06 E H
R194(1)	PI4EX	A1	68Ω	EBUS PI07 E H
R167(1)	PI2EX	A5	68Ω	EBUS XFER E H
R129(1)	PI4EX	D3	68Ω	IR 03 H
R127(1)	PI4EX	D3	68Ω	IR 04 H
R130(1)	PI4EX	D3	68Ω	IR 05 H
R169(1)	PI4EX	D3	68Ω	IR 06 H
R257(1)	PI4EX	D2	68Ω	IR 07 H
R254(1)	PI4EX	D2	68Ω	IR 08 H
R256(1)	PI4EX	D2	68Ω	IR 09 H
R272(1)	PI4EX	C6	68Ω	MR RESET 02 H
R229(1)	PI5EX	B3	68Ω	-MTR 1 MH2 A H

RESISTOR LOC(PIN)	SHOWN ON DRW#	REF	VALUE	TERMINATES SIGNAL
R203(1)	PI3EX	B5	68Ω	-MTR CONO MTR, H
R91(1)	PI3EX	C6	68Ω	-MTR VECTOR INTERRUPT H
R101(1)	PI4EX	A6	68Ω	-PI XOR ON BUS H
R119(1)	PI1EX	D1	68Ω	PI1 ACTIVE H
R206(1)	PI1EX	D1	68Ω	-PI1 ACTIVE H
R60(1)	PI1EX	D1	68Ω	-PI1 ACTIVE B H
R188(1)	PI1EX	D5	68Ω	PI1 GEN 1 H
R50(1)	PI1EX	D5	68Ω	-PI1 GEN 1 H
R183(1)	PI1EX	D5	68Ω	PI1 GEN 2 H
R45(1)	PI1EX	D5	68Ω	-PI1 GEN 2 H
R182(1)	PI1EX	C5	68Ω	PI1 GEN 3 H
R63(1)	PI1EX	C5	68Ω	-PI1 GEN 3 H
R141(1)	PI1EX	C5	68Ω	PI1 GEN 4 H
R62(1)	PI1EX	C5	68Ω	-PI1 GEN 4 H
R142(1)	PI1EX	B5	68Ω	PI1 GEN 5 H
R290(1)	PI1EX	B5	68Ω	-PI1 GEN 5 H
R135(1)	PI1EX	B5	68Ω	PI1 GEN 6 H
R200(1)	PI1EX	B5	68Ω	-PI1 GEN 6 H
R175(1)	PI1EX	A5	68Ω	PI1 GEN 7 H
R213(1)	PI1EX	A5	68Ω	-PI1 GEN 7 H
R187(1)	PI1EX	D7	68Ω	PI1 ON 1 H
R52(1)	PI1EX	D7	68Ω	-PI1 ON 1 H
R179(1)	PI1EX	D7	68Ω	PI1 ON 2 H
R48(1)	PI1EX	D7	68Ω	-PI1 ON 2 H
R188(1)	PI1EX	C7	68Ω	PI1 ON 3 H
R61(1)	PI1EX	C7	68Ω	-PI1 ON 3 H
R140(1)	PI1EX	C7	68Ω	PI1 ON 4 H
R57(1)	PI1EX	C7	68Ω	-PI1 ON 4 H
R138(1)	PI1EX	B7	68Ω	PI1 ON 5 H
R291(1)	PI1EX	B7	68Ω	-PI1 ON 5 H
R133(1)	PI1EX	B7	68Ω	PI1 ON 6 H
R287(1)	PI1EX	B7	68Ω	-PI1 ON 6 H
R134(1)	PI1EX	A7	68Ω	PI1 ON 7 H
R207(1)	PI1EX	A7	68Ω	-PI1 ON 7 H
R143(1)	PI1EX	D2	68Ω	PI1 PIH1 H
R144(1)	PI1EX	D2	68Ω	PI1 PIH2 H
R145(1)	PI1EX	C2	68Ω	PI1 PIH3 H
R42(1)	PI1EX	C2	68Ω	PI1 PIH4 H
R92(1)	PI1EX	B2	68Ω	PI1 PIH5 H
R93(1)	PI1EX	B2	68Ω	PI1 PIH6 H

RESISTOR LOC(PIN)	SHOWN ON DRW#	REF	VALUE	TERMINATES SIGNAL
R173(1)	PI1EX	A2	68Ω	PI1 PIH7 H
R108(1)	PI1EX	D4	68Ω	PI1 PIR EN 1 H
R105(1)	PI1EX	C4	68Ω	PI1 PIR EN 2 H
R106(1)	PI1EX	C4	68Ω	PI1 PIR EN 3 H
R107(1)	PI1EX	B4	68Ω	PI1 PIR EN 4 H
R221(1)	PI1EX	B4	68Ω	PI1 PIR EN 5 H
R220(1)	PI1EX	A4	68Ω	PI1 PIR EN 6 H
R217(1)	PI1EX	A4	68Ω	PI1 PIR EN 7 H
R101(1)	PI1EX	B1	68Ω	PI1 PIR0 H
R103(1)	PI1EX	C1	68Ω	PI1 PIR1 H
R104(1)	PI1EX	C1	68Ω	PI1 PIR2 H
R102(1)	PI1EX	C1	68Ω	PI1 PIR3 H
R160(1)	PI1EX	C1	68Ω	PI1 PIR4 H
R152(1)	PI1EX	B1	68Ω	PI1 PIR5 H
R156(1)	PI1EX	B1	68Ω	PI1 PIR6 H
R159(1)	PI1EX	B1	68Ω	PI1 PIR7 H
R189(1)	PI2EX	A5	68Ω	PI2 APR REQUESTING H
R67(1)	PI2EX	A7	68Ω	PI2 CLK A H
R293(1)	PI2EX	A7	68Ω	PI2 CLK B H
R201(1)	PI2EX	A7	68Ω	PI2 CLK C H
R236(1)	PI2EX	A7	68Ω	PI2 CLK D H
R165(1)	PI2EX	A7	68Ω	PI2 CLK E H
R3(1)	PI2EX	A7	68Ω	PI2 CLK F H
R239(1)	PI2EX	C1	68Ω	PI2 COMP H
R73(1)	PI2EX	B4	68Ω	-PI2 DISABLE RDY ON HALT H
R264(1)	PI2EX	A5	68Ω	PI2 DK20 REQUESTING H
R197(1)	PI2EX	C4	68Ω	PI2 EBUS RETURN H
R77(1)	PI2EX	C4	68Ω	-PI2 EBUS RETURN H
R297(1)	PI2EX	B1	68Ω	PI2 HONOR INTERNAL H
R171(1)	PI2EX	B1	68Ω	-PI2 HONOR INTERNAL H
R32(1)	PI2EX	D4	68Ω	PI2 PHT FORCE H
R35(1)	PI2EX	B7	68Ω	PI2 PHT NO. 00 H
R18(1)	PI2EX	B7	68Ω	PI2 PHT NO. 01 H
R21(1)	PI2EX	B7	68Ω	PI2 PHT NO. 02 H
R25(1)	PI2EX	A7	68Ω	PI2 PHT NO. 03 H
R24(1)	PI2EX	A7	68Ω	PI2 PHT NO. 04 H
R23(1)	PI2EX	A7	68Ω	PI2 PHT NO. 05 H
R22(1)	PI2EX	B6	68Ω	PI2 PHT NO. 06 H
R19(1)	PI2EX	B6	68Ω	PI2 PHT NO. 07 H
R36(1)	PI2EX	B6	68Ω	PI2 PHT NO. 08 H

NOTE:

1. ALL TERMINATORS HAVE PIN TWO CONNECTED TO -2.0V AND ARE 5% 1/4WATT UNLESS OTHERWISE SPECIFIED
2. ENTRIES ARE SORTED BY SIGNAL NAME
3. % INDICATES OUTPUT OF DIP LOC AND () INDICATES PIN NUMBER

"THIS DRAWING AND SPECIFICATIONS, HEREIN, ARE THE PROPERTY OF DIGITAL EQUIPMENT CORPORATION AND SHALL NOT BE REPRODUCED OR COPIED OR USED IN WHOLE OR IN PART AS THE BASIS FOR THE MANUFACTURE OR SALE OF ITEMS WITHOUT WRITTEN PERMISSION. COPYRIGHT © 1975, DIGITAL EQUIPMENT CORPORATION"

REVISIONS			M8532-0005 B1
CHK	CHANGE NO.	REV	Burt Q. Hurst 30CT77
	M8532-00003	A	J. CALVO
			W. BRUCKERT

digital

DRN. C. Smith DATE 13-NOV-75 ENG. DATE 1/31/76
CHK'D DATE 12/4/75 BOARD LOCATION: SHEET 1 OF 2
M8321.RVB[4,427] 13-NOV-75 10:23 NEXT HIGHER ASSEMBLY: B-DD-M8532-0
FIRST USED ON OPTION/MODEL: KL10

TITLE: P. I. CONTROL TERMINATORS

SIZE	CODE	NUMBER	REV.
D	CS	M8532-0-RES	B1

205

RESISTOR LOC(PIN)	SHOWN ON DRW#	REF	VALUE	TERMINATES SIGNAL
R30(1)	PI2EX	A6	68Ω	PI2 PHY NO. 09 H
R29(1)	PI2EX	A6	68Ω	PI2 PHY NO. 10 H
R28(1)	PI2EX	A6	68Ω	PI2 PHY NO. 11 H
R27(1)	PI2EX	B5	68Ω	PI2 PHY NO. 12 H
R26(1)	PI2EX	B5	68Ω	PI2 PHY NO. 13 H
R33(1)	PI2EX	B5	68Ω	PI2 PHY NO. 14 H
R31(1)	PI2EX	A5	68Ω	PI2 PHY NO. 15 H
R82(1)	PI2EX	D7	68Ω	PI2 PI ON 0 H
R190(1)	PI2EX	D6	68Ω	PI2 PI1 H
R112(1)	PI2EX	C7	68Ω	-PI2 PI1 CLR H
R109(1)	PI1EX	D3	68Ω	PI2 PI1 REQ SET H
R255(1)	PI2EX	D6	68Ω	PI2 PI2 H
R111(1)	PI2EX	C7	68Ω	-PI2 PI2 CLR H
R110(1)	PI1EX	D3	68Ω	PI2 PI2 REQ SET H
R162(1)	PI2EX	C7	68Ω	-PI2 PI3 CLR H
R66(1)	PI1EX	C3	68Ω	PI2 PI3 REQ SET H
R41(1)	PI2EX	D7	68Ω	-PI2 PI4 H
R226(1)	PI2EX	C7	68Ω	-PI2 PI4 CLR H
R60(1)	PI1EX	C3	68Ω	PI2 PI4 REQ SET H
R225(1)	PI2EX	C7	68Ω	-PI2 PI5 CLR H
R224(1)	PI1EX	B3	68Ω	PI2 PI5 REQ SET H
R220(1)	PI2EX	B7	68Ω	-PI2 PI6 CLR H
R222(1)	PI1EX	B3	68Ω	PI2 PI6 REQ SET H
R227(1)	PI2EX	B7	68Ω	-PI2 PI7 CLR H
R294(1)	PI1EX	A3	68Ω	PI2 PI7 REQ SET H
R9(1)	PI2EX	D6	68Ω	PI2 REQ H
R170(1)	PI2EX	D4	68Ω	PI2 SEL PHY 1 H
R131(1)	PI2EX	D4	68Ω	PI2 SEL PHY 2 H
R128(1)	PI2EX	D4	68Ω	PI2 SEL PHY 4 H
R132(1)	PI2EX	D4	68Ω	PI2 SEL PHY 8 H
R176(1)	PI2EX	B4	68Ω	PI2 STATE HOLD H
R263(1)	PI2EX	C2	68Ω	PI2 TIM 5,6 H
R249(1)	PI2EX	C2	68Ω	-PI2 TIM 5,6 H
R234(1)	PI2EX	D3	68Ω	PI2 TIM1 H
R117(1)	PI2EX	D2	68Ω	-PI2 TIM1 H
R122(1)	PI2EX	D3	68Ω	PI2 TIM2 H
R34(1)	PI2EX	D3	68Ω	PI2 TIM3 H
R247(1)	PI2EX	C3	68Ω	PI2 TIM4 H
R172(1)	PI2EX	D2	68Ω	-PI2 TIM4 H
R1(1)	PI2EX	D1	68Ω	PI2 TIM5 H

RESISTOR LOC(PIN)	SHOWN ON DRW#	REF	VALUE	TERMINATES SIGNAL
R296(1)	PI2EX	D1	68Ω	PI2 TIM6 H
R87(1)	PI2EX	D1	68Ω	-PI2 TIM6 H
R11(1)	PI2EX	D1	68Ω	PI2 TIM7 H
R195(1)	PI2EX	A1	68Ω	PI2 TIMER DONE H
R72(1)	PI2EX	B1	68Ω	-PI2 TIMER DONE H
R70(1)	PI2EX	B4	68Ω	PI2 TRAN REC H
R74(1)	PI2EX	B3	68Ω	-PI2 TRAN REC H
R89(1)	PI3EX	B2	68Ω	PI3 APR PHY NO. H
R96(1)	PI3EX	B3	68Ω	-PI3 APR PHY NO. H
R90(1)	PI3EX	C2	68Ω	PI3 DK20 PHY NO. H
R71(1)	PI3EX	D3	68Ω	-PI3 DK20 PHY NO. H
R115(1)	PI3EX	D5	68Ω	PI3 PI01 H
R123(1)	PI3EX	D5	68Ω	PI3 PI02 H
R46(1)	PI3EX	D5	68Ω	PI3 PI03 H
R273(1)	PI3EX	D5	68Ω	PI3 PI04 H
R37(1)	PI3EX	D5	68Ω	PI3 PI05 H
R192(1)	PI3EX	D4	68Ω	PI3 PI06 H
R191(1)	PI3EX	D4	68Ω	PI3 PI07 H
R186(1)	PI4EX	A7	68Ω	PI4 BUS EN H
R139(1)	PI4EX	A7	68Ω	-PI4 BUS EN H
R12(1)	PI4EX	D7	68Ω	-PI4 CONO DLY H
R137(1)	PI4EX	B7	68Ω	PI4 DIAG 05 H
R174(1)	PI4EX	B6	68Ω	PI4 DIAG 06 H
R177(1)	PI4EX	B7	68Ω	PI4 DIAG 10 H
R280(1)	PI4EX	D6	68Ω	-PI4 GEN CLR H
R281(1)	PI4EX	D6	68Ω	-PI4 GEN SET H
R51(1)	PI4EX	B1	68Ω	-PI4 IO REQ1 H
R47(1)	PI4EX	B1	68Ω	-PI4 IO REQ2 H
R64(1)	PI4EX	B1	68Ω	-PI4 IO REQ3 H
R58(1)	PI4EX	A1	68Ω	-PI4 IO REQ4 H
R209(1)	PI4EX	A1	68Ω	-PI4 IO REQ5 H
R223(1)	PI4EX	A1	68Ω	-PI4 IO REQ6 H
R206(1)	PI4EX	A1	68Ω	-PI4 IO REQ7 H
R54(1)	PI4EX	B3	68Ω	-PI4 IOB 11 H
R53(1)	PI4EX	B3	68Ω	-PI4 IOB 12 H
R90(1)	PI4EX	B3	68Ω	-PI4 IOB 13 H
R155(1)	PI4EX	A3	68Ω	-PI4 IOB 14 H
R198(1)	PI4EX	A2	68Ω	PI4 IOB 15 H
R215(1)	PI4EX	A3	68Ω	-PI4 IOB 15 H
R204(1)	PI4EX	A2	68Ω	PI4 IOB 16 H

RESISTOR LOC(PIN)	SHOWN ON DRW#	REF	VALUE	TERMINATES SIGNAL
R284(1)	PI4EX	A3	68Ω	-PI4 IOB 16 H
R202(1)	PI4EX	A2	68Ω	PI4 IOB 17 H
R211(1)	PI4EX	A3	68Ω	-PI4 IOB 17 H
R233(1)	PI4EX	C6	68Ω	PI4 MR RESET H
R166(1)	PI4EX	C6	68Ω	-PI4 MR RESET H
R208(1)	PI4EX	D5	68Ω	PI4 OFF H
R86(1)	PI4EX	C4	68Ω	PI4 OK ON HALT H
R209(1)	PI4EX	D5	68Ω	-PI4 ON H
R276(1)	PI4EX	D5	68Ω	-PI4 ON CLR H
R285(1)	PI4EX	D6	68Ω	-PI4 ON SET H
R292(1)	PI4EX	C6	68Ω	PI4 SYS CLR H
R95(1)	PI4EX	D6	68Ω	-PI4 SYS CLR A H
R65(1)	PI4EX	D6	68Ω	PI4 SYS CLR B H
R178(1)	PI5EX	A2	68Ω	-PI5 BUS EN H
R242(1)	PI5EX	D3	68Ω	PI5 CP BUS EN H
R196(1)	PI5EX	D1	68Ω	PI5 CTC START H
R76(1)	PI5EX	D1	68Ω	-PI5 CTC START H
R244(1)	PI5EX	D3	68Ω	-PI5 EBUS CP GRANT H
R298(1)	PI5EX	D3	68Ω	PI5 EBUS PI GRANT H
R80(1)	PI5EX	D3	68Ω	-PI5 EBUS PI GRANT H
R136(1)	PI5EX	C4	68Ω	PI5 EBUS REQ H
R241(1)	PI5EX	C4	68Ω	-PI5 EBUS REQ H
R149(1)	PI5EX	C6	68Ω	PI5 GEN 1 H
R151(1)	PI5EX	C6	68Ω	PI5 GEN 2 H
R150(1)	PI5EX	C7	68Ω	PI5 GEN 4 H
R185(1)	PI5EX	B5	68Ω	PI5 GEN INT H
R94(1)	PI5EX	B5	68Ω	-PI5 GEN INT H
R148(1)	PI5EX	C7	68Ω	PI5 GEN ON H
R81(1)	PI5EX	D7	68Ω	-PI5 INHIBIT REQ H
R219(1)	PI5EX	D6	68Ω	PI5 LOAD H
R253(1)	PI5EX	B7	68Ω	PI5 T BR2
R252(1)	PI5EX	B7	68Ω	PI5 T BT2
R251(1)	PI5EX	B7	68Ω	PI5 T BU2
R250(1)	PI5EX	B7	68Ω	PI5 T BV2
R261(1)	PI5EX	B7	68Ω	PI5 T CM2
R259(1)	PI5EX	A7	68Ω	PI5 T CP1
R258(1)	PI5EX	A7	68Ω	PI5 T CS2
R266(1)	PI5EX	A7	68Ω	PI5 T DC1
R265(1)	PI5EX	A7	68Ω	PI5 T DD1
R271(1)	PI5EX	A7	68Ω	PI5 T DS1

RESISTOR LOC(PIN)	SHOWN ON DRW#	REF	VALUE	TERMINATES SIGNAL
R275(1)	PI5EX	A7	68Ω	PI5 T EA1
R274(1)	PI5EX	A7	68Ω	PI5 T ED1
R277(1)	PI5EX	A7	68Ω	PI5 T EE2
R279(1)	PI5EX	A7	68Ω	PI5 T EK2
R278(1)	PI5EX	A7	68Ω	PI5 T EL2
R17(1)	PI5EX	D6	68Ω	PI5 TEST H
R44(1)	PI5EX	D6	68Ω	PI5 WAIT1 H
R43(1)	PI5EX	D6	68Ω	PI5 WAIT2 H
R168(1)	PI5EX	C2	68Ω	PI5 XFER FORCE H

NOTE:

1. ALL TERMINATORS HAVE PIN TWO CONNECTED TO -2.0V AND ARE 5% 1/4WATT UNLESS OTHERWISE SPECIFIED
2. ENTRIES ARE SORTED BY SIGNAL NAME
3. % INDICATES OUTPUT OF DIP LOC AND () INDICATES PIN NUMBER

"THIS DRAWING AND SPECIFICATIONS, HEREIN, ARE THE PROPERTY OF DIGITAL EQUIPMENT CORPORATION AND SHALL NOT BE REPRODUCED OR COPIED OR USED IN WHOLE OR IN PART AS THE BASIS FOR THE MANUFACTURE OR SALE OF ITEMS WITHOUT WRITTEN PERMISSION. COPYRIGHT © 1975, DIGITAL EQUIPMENT CORPORATION"

REVISIONS		
CHK	CHANGE NO.	REV
	M8532-0005	B1
	Pwr 1 Hwr Acc-II	
	J.C.A.V.O	

DRN. C. Smith DATE 13-NOV-74 ENG. DATE 1/23/76
CHK'D. DATE 12/6/75 BOARD LOCATION: SHEET 2 OF 2
M8532.RVB(4,427) 13-NOV-75 10:30 NEXT HIGHER ASSEMBLY:
FIRST USED ON OPTION/MODEL: KL10 B-DD-M8532-0

TITLE: P. I. CONTROL TERMINATORS

SIZE	CODE	NUMBER	REV.
D	CS	M8532-0-RES	B1

206

DRAWING NUMBER	PAGES	PART NO.	DESCRIPTION	REVISIONS	
			FILE: #1 RELAYOUT		
			ECO NUMBER	5	6
			MODULE REVISION	E	F
D-UA-M8532-0-0	6		PI LOGIC BOARD	E	F
K-PL-M8532-0-DBP	1		PI LOGIC BOARD	*	F
D-CS-M8532-0-PIC1	1		PRIORITY INTERRUPT REGISTER	C	C
D-CS-M8532-0-PIC2	1		PRIORITY INTERRUPT DEVICE SELECTION	C	D
D-CS-M8532-0-PIC3	1		PRIORITY INTERRUPT CHANNELS	D	D
D-CS-M8532-0-PIC4	1		PRIORITY INTERRUPT EBUS INTERFACE	C	C
D-CS-M8532-0-PIC5	1		PRIORITY INTERRUPT CONTROL	C	D
D-CS-M8532-0-PIC6	1		POWER. GND. CAPS.	B	C
D-CS-M8532-0-RES	1		TERMINATORS	C	C
D-AH-M8532-0-5	4		PI LOGIC BOARD	B	B
		5010829	ETCH CIRCUIT BOARD	C	C
K-CO-M8532-0-4	1		PI LOGIC BOARD	C	C
POO-M8532-00			PROCESS SHEET (REF ONLY)		

NOTES:

"THIS DRAWING AND SPECIFICATIONS, HEREIN, ARE THE PROPERTY OF DIGITAL EQUIPMENT CORPORATION AND SHALL NOT BE REPRODUCED OR COPIED OR USED IN WHOLE OR IN PART AS THE BASIS FOR THE MANUFACTURE OR SALE OF ITEMS WITHOUT WRITTEN PERMISSION. COPYRIGHT © 1978, DIGITAL EQUIPMENT CORPORATION"

REVISIONS		
CHK	CHANGE NO.	REV

digital

DRN. D. Stanley DATE 24-OCT-78 ENG. W.BRUCKERT DATE 1-24-75
CHK'D. G.FLANDERS DATE 1-27-75 BOARD LOCATION: N/A
DSK:8532DD.T2P[4,615] 24-OCT-78 13:47 SHEET 2 OF 2
FIRST USED ON OPTION/MODEL: KL10 NEXT HIGHER ASSEMBLY: NONE

TITLE: PI LOGIC BOARD

SIZE	CODE	NUMBER	REV.
D	DD	M8532-0	F

MR

207

THIS DRAWING AND SPECIFICATIONS, HEREIN, ARE THE PROPERTY OF DIGITAL EQUIPMENT CORPORATION AND SHALL NOT BE REPRODUCED OR COPIED OR USED IN WHOLE OR IN PART AS THE BASIS FOR THE MANUFACTURE OR SALE OF ITEMS WITHOUT WRITTEN PERMISSION. COPYRIGHT © 1977 DIGITAL EQUIPMENT CORPORATION

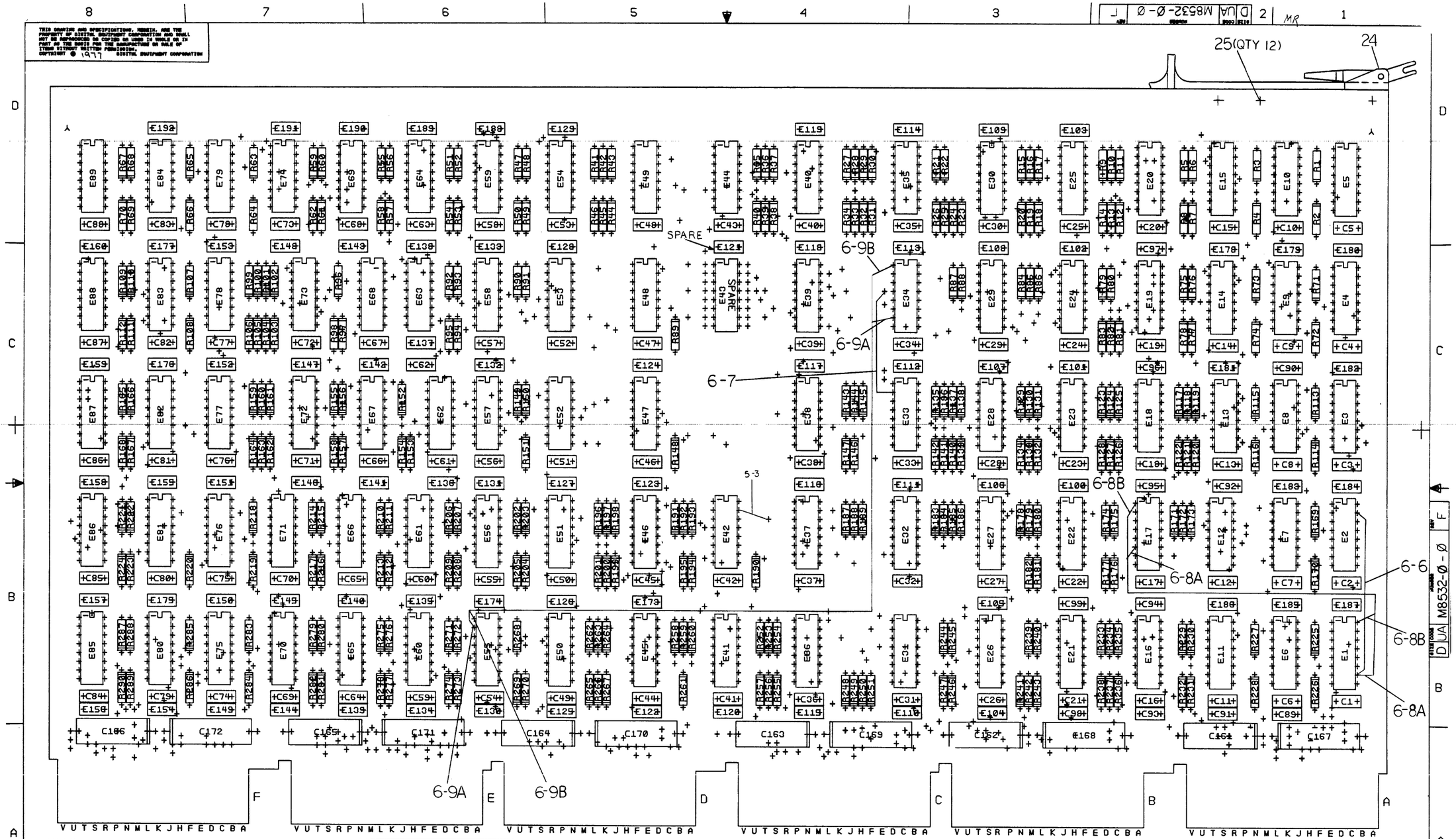

NOTES:

CHK	CHANGE NO	REV
	M8532-MR6	F
	L.BALES	

SIGNATURES	DATE
DRN. E. Wilson	11 MAY 77
CHK'D. R.W. Cantey	12 MAY 77
ENG.	
PROJ.ENG.	
PROD. W. Bailey	19 Aug 77

digital

TITLE PI LOGIC

SCALE 2/1	SIZE	CODE	NUMBER	REV
SHT. 1 OF 5	D	UA	M8532-Ø-Ø	F

NEXT HIGHER ASSY. B-DD-M8512-Ø

ETCH REV. C

P.C. DESIGN DATA BASE REV. C

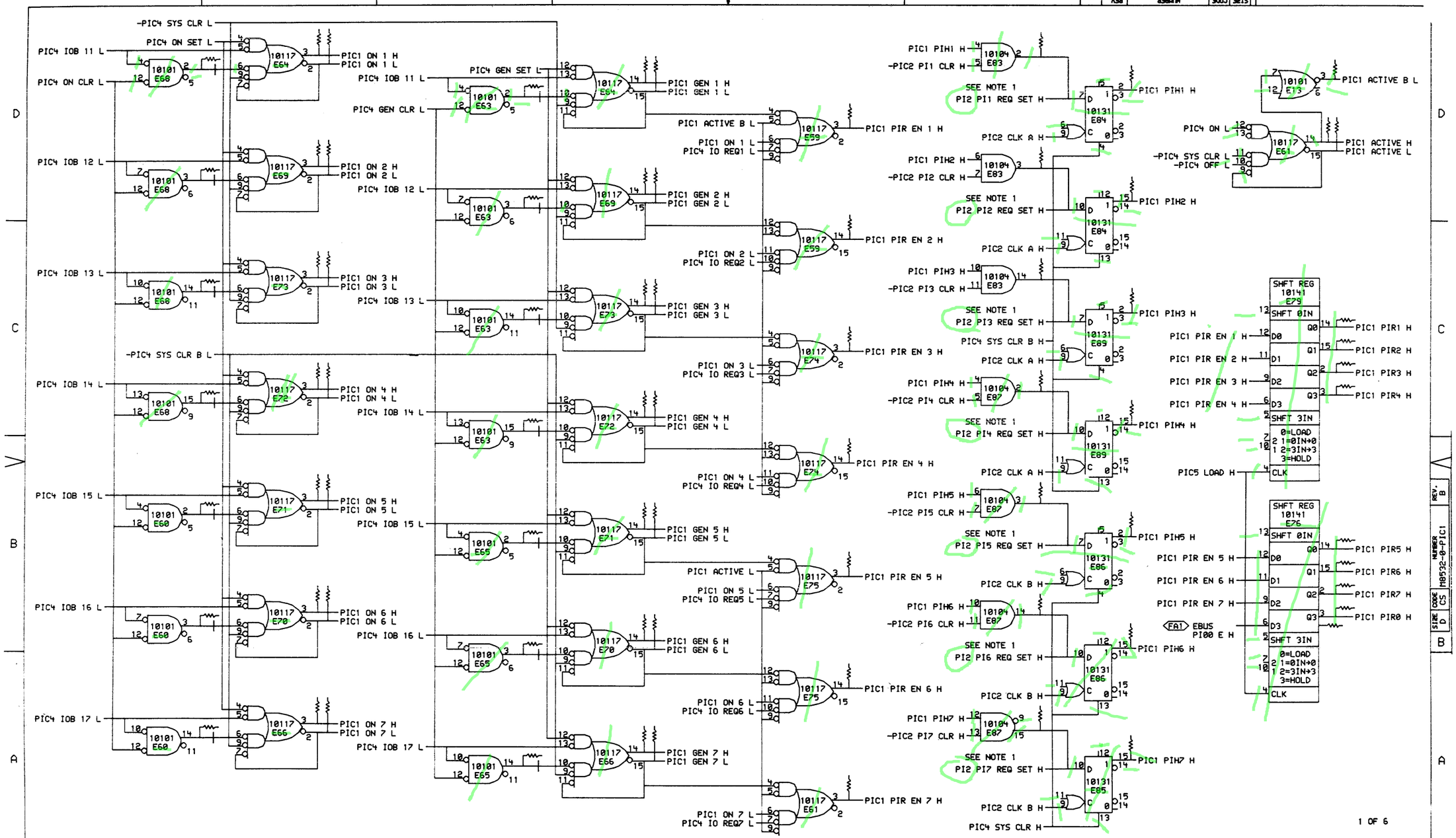

NOTE 1: THESE SIGNALS ARE EMITTER ORED WITH SIGNALS GENERATED ON THE PIC2 PRINT

"THIS DRAWING AND SPECIFICATIONS, HEREIN, ARE THE PROPERTY OF DIGITAL EQUIPMENT CORPORATION AND SHALL NOT BE REPRODUCED OR COPIED OR USED IN WHOLE OR IN PART AS THE BASIS FOR THE MANUFACTURE OR SALE OF ITEMS WITHOUT WRITTEN PERMISSION. COPYRIGHT © 1977, DIGITAL EQUIPMENT CORPORATION"

REVISIONS		
CHK	CHANGE NO.	REV

digital

DRN. J. Lagosky DATE 25-MAY-77 ENG. DATE
CHK'D. D. Stephenson DATE 5/27/77 BOARD LOCATION: 4AF31
SHEET 1 OF 1
P11ER.DRW[4,567] 25-MAY-77 06:22 NEXT HIGHER ASSEMBLY:
FIRST USED ON OPTION/MODEL: KL10 B-DD-M8532-0

TITLE: PRIORITY INTERRUPT REGISTERS

SIZE	CODE	NUMBER	REV.
D	CS	M8532-0-PIC1	B

209

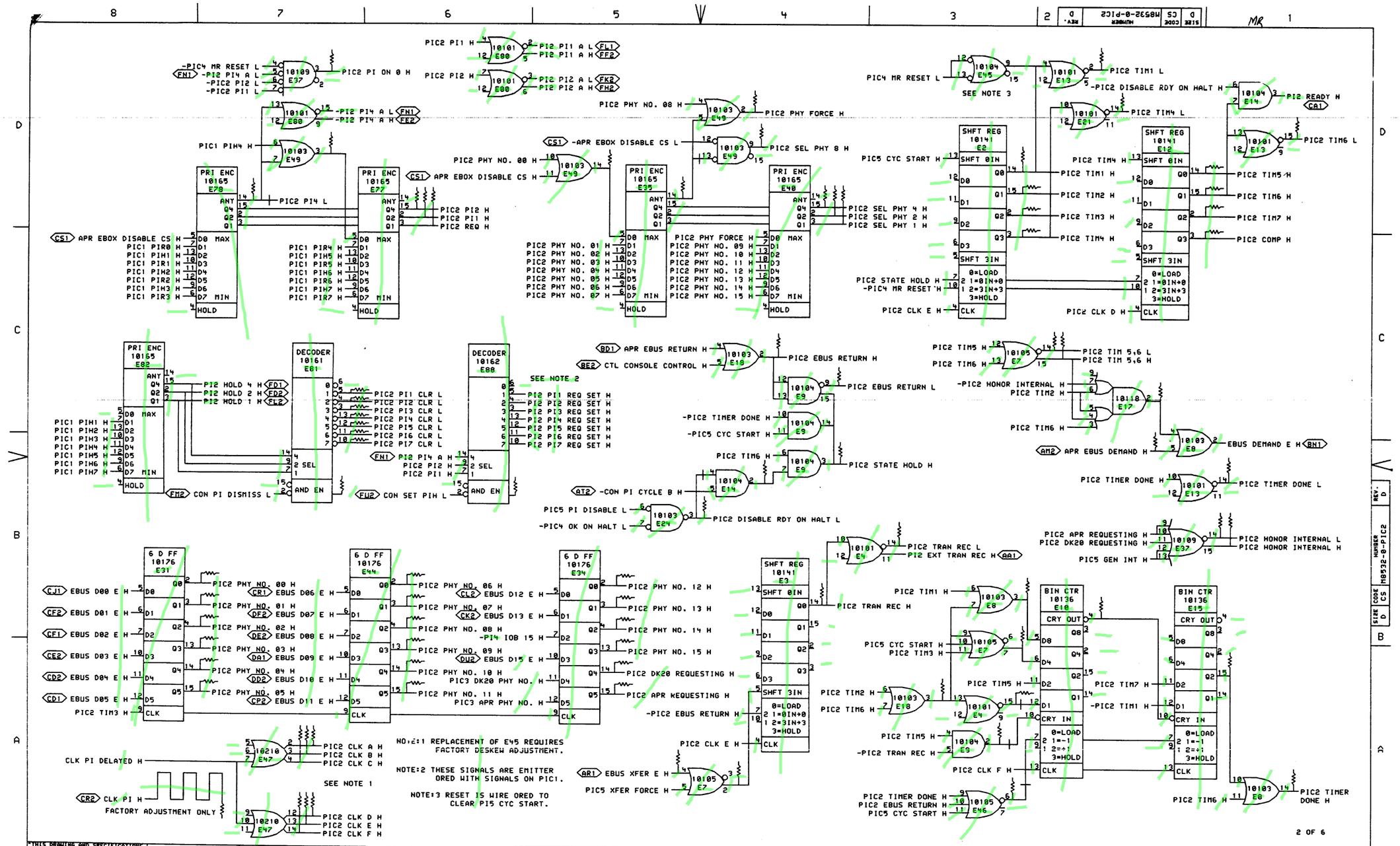
PRIORITY INTERRUPT DEVICE SELECTION
M8532-0-PIC2
2 OF 6
PRI ENC 10165 E70
PRI ENC 10165 E77
PRI ENC 10165 E35
PRI ENC 10165 E40
PRI ENC 10165 E82
DECODER 10161 E81
DECODER 10162 E88
6 D FF 10176 E31
6 D FF 10176 E44
6 D FF 10176 E34
SHFT REG 10141 E2
SHFT REG 10141 E12
SHFT REG 10141 E3
BIN CTR 10136 E10
BIN CTR 10136 E15
NO:2:1 REPLACEMENT OF E45 REQUIRES FACTORY DESKEW ADJUSTMENT.
NOTE:2 THESE SIGNALS ARE EMITTER ORED WITH SIGNALS ON PIC1.
NOTE:3 RESET IS WIRE ORED TO CLEAR P15 CYC START.
SEE NOTE 1
SEE NOTE 2
SEE NOTE 3
FACTORY ADJUSTMENT ONLY
"THIS DRAWING AND SPECIFICATIONS, HEREIN, ARE THE PROPERTY OF DIGITAL EQUIPMENT CORPORATION AND SHALL NOT BE REPRODUCED OR COPIED OR USED IN WHOLE OR IN PART AS THE BASIS FOR THE MANUFACTURE OR SALE OF ITEMS WITHOUT WRITTEN PERMISSION. COPYRIGHT © 1978, DIGITAL EQUIPMENT CORPORATION."
REVISIONS
CHK CHANGE NO. REV
M8532-MR6 D
SALES
digital
DRN. 28-JUL-78
CHK'D 23-OCT-78
ENG. 10-27-78
MODULE:<M8532>PI2ER.DRW 20-JUL-78 11:29
FIRST USED ON OPTION/MODEL: KL10
NEXT HIGHER ASSEMBLY: B-DD-M8532-0
BOARD LOCATION: 4AF31
SHEET 1 OF 1
SIZE D CODE CS NUMBER M8532-0-PIC2 REV. D

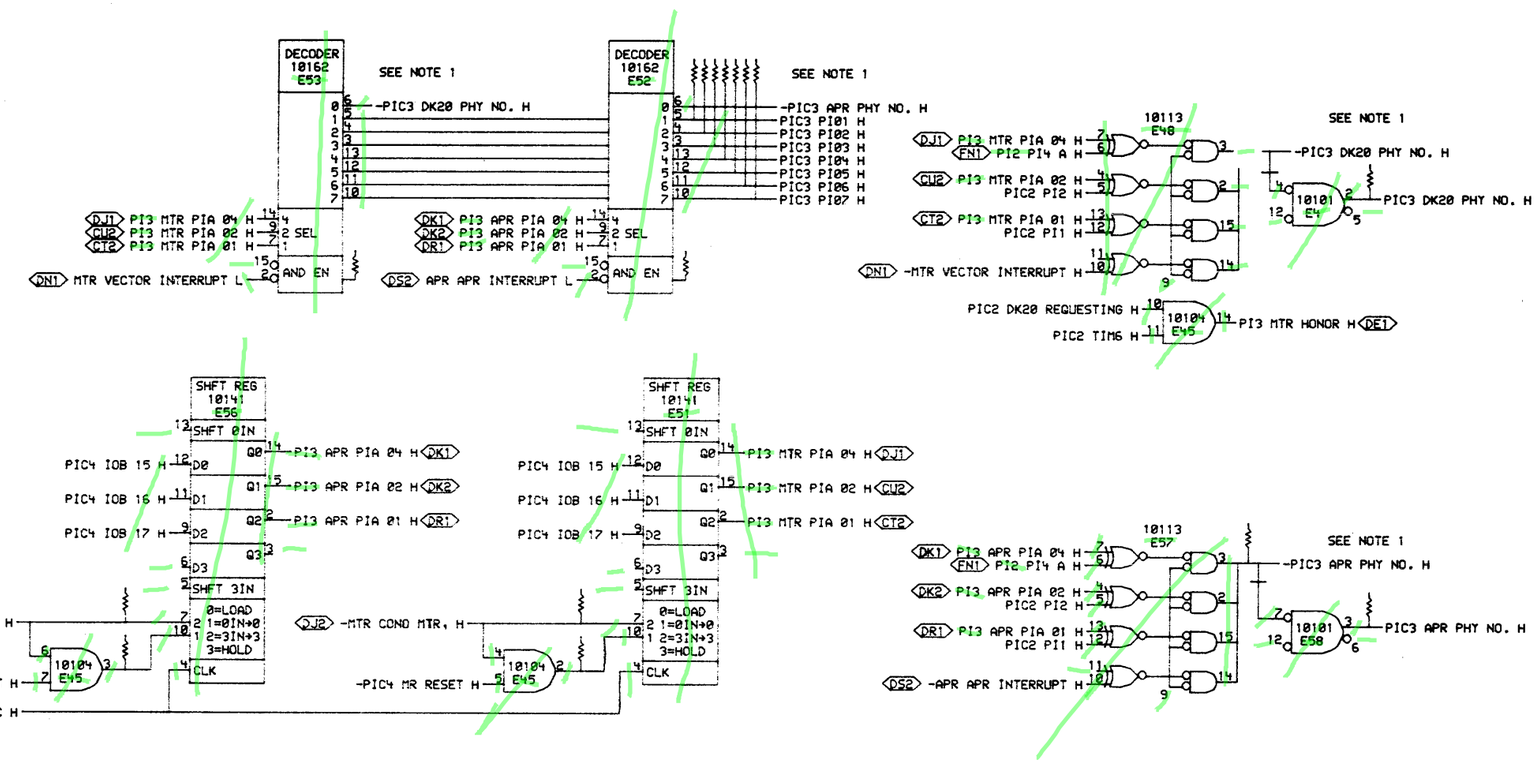

NOTE 1: THIS SIGNAL IS EMITTER ORED
WITH ANOTHER GATE ON THIS PRINT

3 OF 6

"THIS DRAWING AND SPECIFICATIONS, HEREIN, ARE THE PROPERTY OF DIGITAL EQUIPMENT CORPORATION AND SHALL NOT BE REPRODUCED OR COPIED OR USED IN WHOLE OR IN PART AS THE BASIS FOR THE MANUFACTURE OR SALE OF ITEMS WITHOUT WRITTEN PERMISSION.
COPYRIGHT © 1977, DIGITAL EQUIPMENT CORPORATION"

REVISIONS		
CHK	CHANGE NO.	REV

digital

DRN. S. Loosley DATE 25-MAY-77 ENG. W. Bradley DATE 6/20/77
CHK'D. W. Stephenson DATE 6/20/77 BOARD LOCATION: 4AF31
SHEET 1 OF 1
PI3ER.DRW[4,567] 25-MAY-77 06:37 NEXT HIGHER ASSEMBLY:
FIRST USED ON OPTION/MODEL: KL10 B-DD-M8532-0

TITLE: PRIORITY INTERRUPT CHANNELS

SIZE	CODE	NUMBER	REV.
D	CS	M8532-0-PIC3	D

MR

211

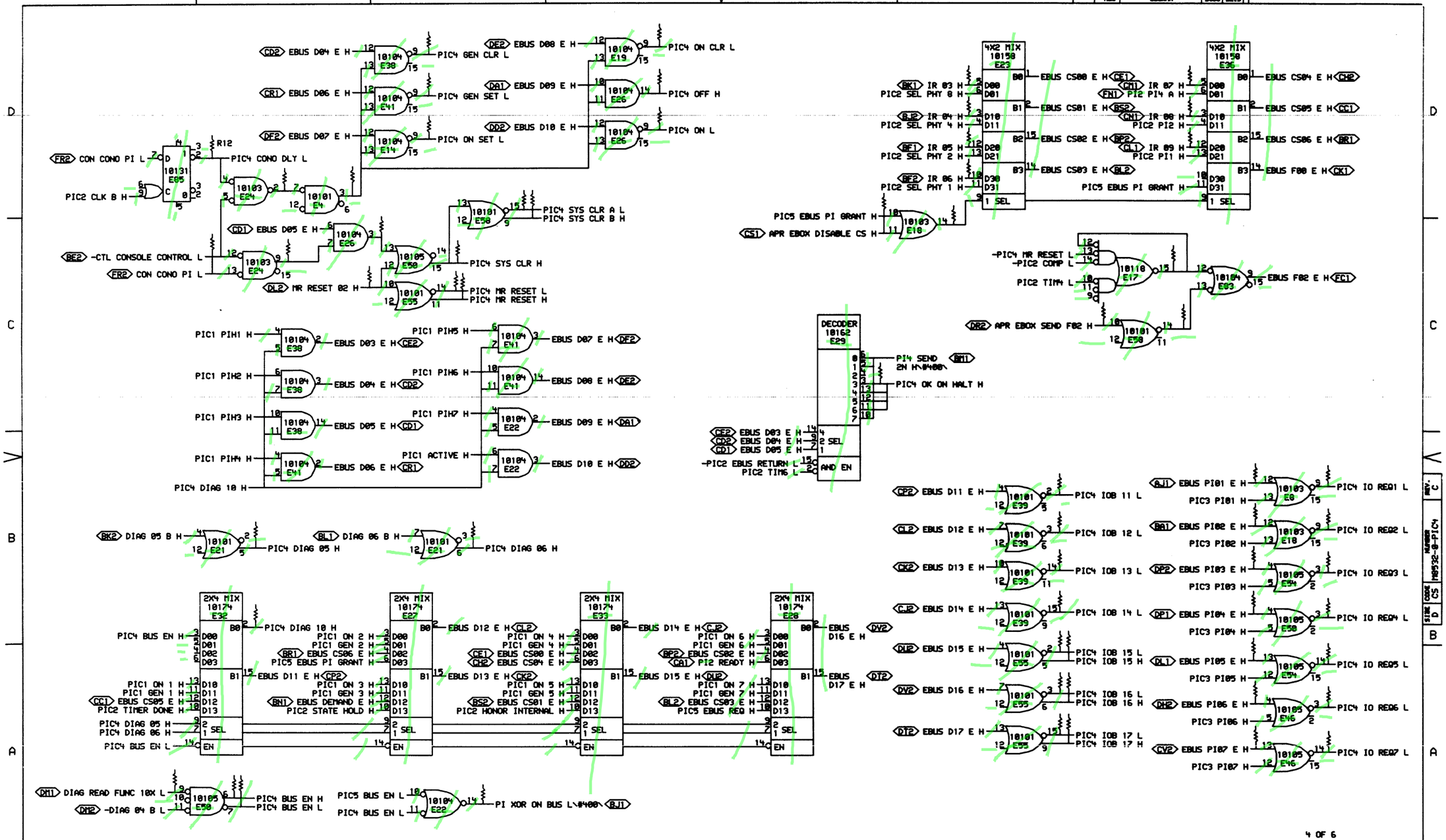

"THIS DRAWING AND SPECIFICATIONS, HEREIN, ARE THE PROPERTY OF DIGITAL EQUIPMENT CORPORATION AND SHALL NOT BE REPRODUCED OR COPIED OR USED IN WHOLE OR IN PART AS THE BASIS FOR THE MANUFACTURE OR SALE OF ITEMS WITHOUT WRITTEN PERMISSION. COPYRIGHT © 1977, DIGITAL EQUIPMENT CORPORATION"

REVISIONS		
CHK	CHANGE NO.	REV

digital

DRN. Tomby DATE 23-AUG-77
CHKD. DATE
ENG. DATE
PI4ER.DRW[4,562] 16-AUG-77 13:53
FIRST USED ON OPTION/MODEL: KL10
BOARD LOCATION: 4AF31
SHEET 1 OF 1
NEXT HIGHER ASSEMBLY: B-DD-M85332-0

TITLE: PRIORITY INTERRUPT EBUS INTERFACE

SIZE	CODE	NUMBER	REV.
D	CS	M8532-0-PIC4	C

MR

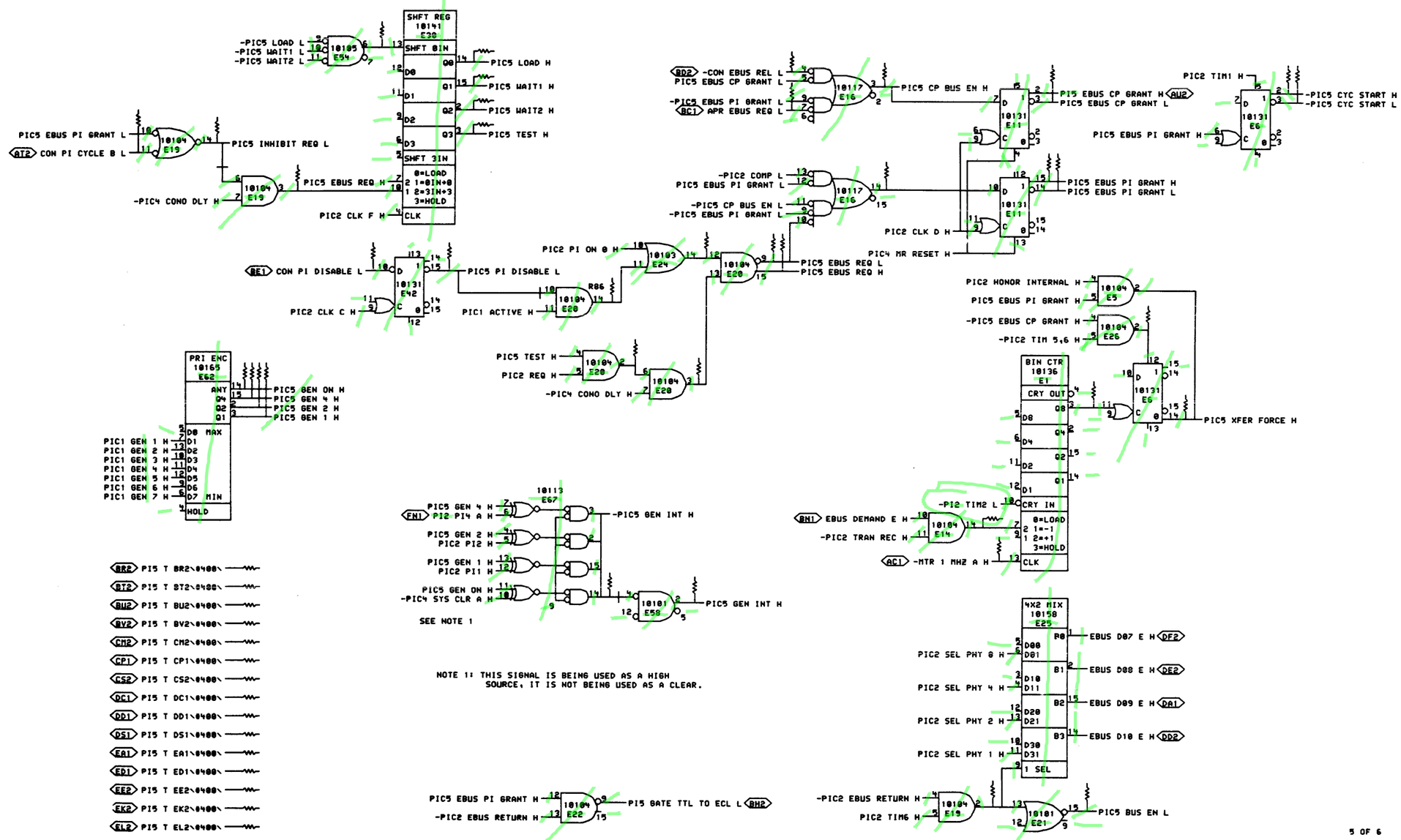

NOTE 1: THIS SIGNAL IS BEING USED AS A HIGH SOURCE, IT IS NOT BEING USED AS A CLEAR.

5 OF 6

"THIS DRAWING AND SPECIFICATIONS, HEREIN, ARE THE PROPERTY OF DIGITAL EQUIPMENT CORPORATION AND SHALL NOT BE REPRODUCED OR COPIED OR USED IN WHOLE OR IN PART AS THE BASIS FOR THE MANUFACTURE OR SALE OF ITEMS WITHOUT WRITTEN PERMISSION. COPYRIGHT © 1978, DIGITAL EQUIPMENT CORPORATION"

REVISIONS		
CHK	CHANGE NO.	REV
	M8532-MRG	D

DRW. 29-JUL-78 | ENG. 17-OCT-78 | TITLE: PRIORITY INTERRUPT CONTROL

MODULE: <M8532>PI5ER.DRW 20-JUL-78 11:33 | BOARD LOCATION: NAF31 | SHEET 1 OF 1

FIRST USED ON OPTION/MODEL: KL10 | NEXT HIGHER ASSEMBLY: B-DD-M8532-0

SIZE	CODE	NUMBER	REV.
D	CS	M8532-0-PIC5	D

213

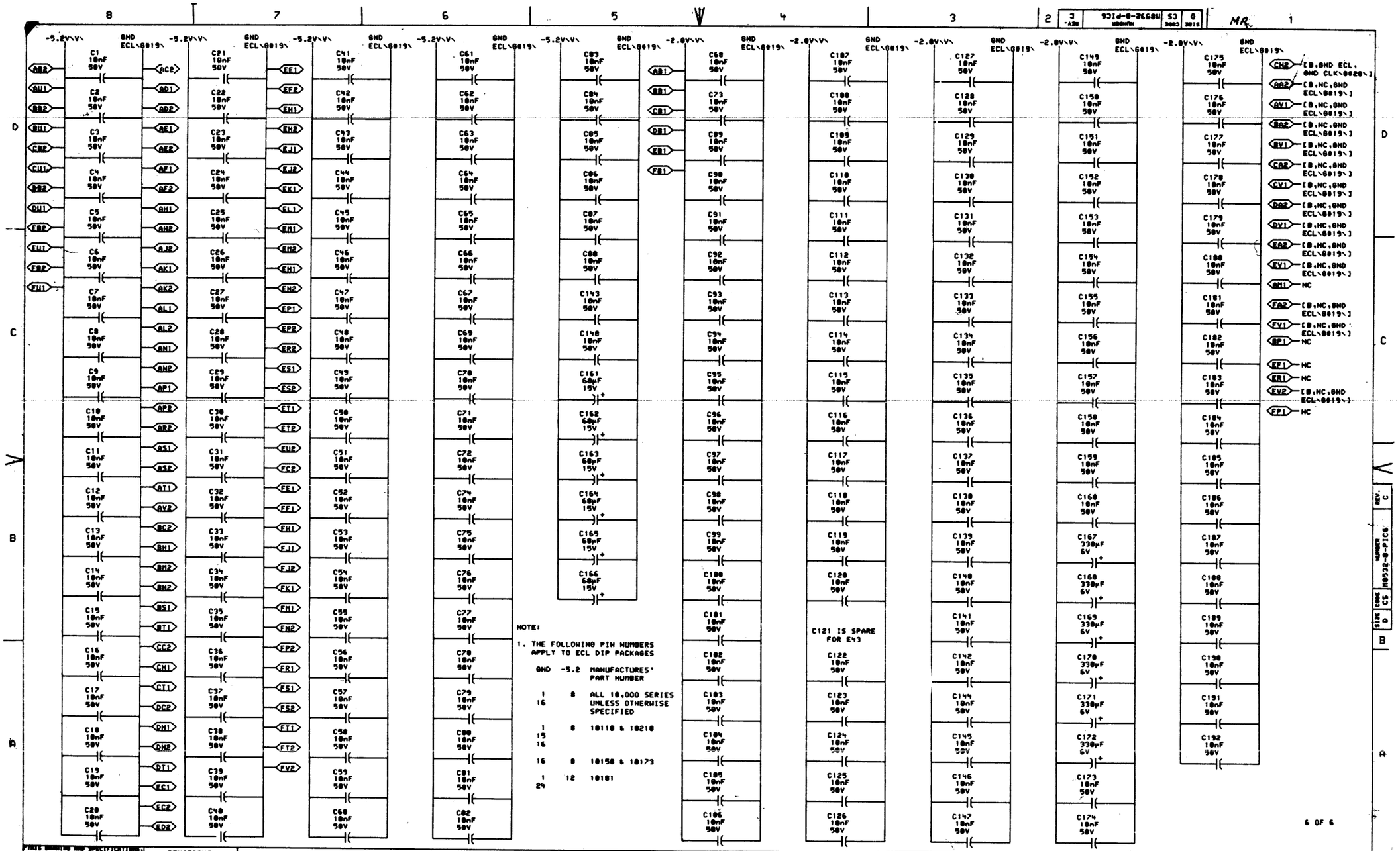

NOTE:

1. THE FOLLOWING PIN NUMBERS APPLY TO ECL DIP PACKAGES

GND	-5.2	MANUFACTURES' PART NUMBER
1, 16	8	ALL 10,000 SERIES UNLESS OTHERWISE SPECIFIED
1, 15, 16	8	10110 & 10210
16	8	10150 & 10173
1, 24	12	10101

THIS DRAWING AND SPECIFICATIONS, HEREIN, ARE THE PROPERTY OF DIGITAL EQUIPMENT CORPORATION AND SHALL NOT BE REPRODUCED OR COPIED OR USED IN WHOLE OR IN PART AS THE BASIS FOR THE MANUFACTURE OR SALE OF ITEMS WITHOUT WRITTEN PERMISSION. COPYRIGHT © 1979, DIGITAL EQUIPMENT CORPORATION.

REVISIONS		
CHK	CHANGE NO.	REV
	M8532-WRA	C
	DATE	

digital

DRN. J. Crowley DATE 31-JUL-78 ENG. J. Bake DATE 10-27-78
CHK'D. DATE
MODULE:<M8532>PIGER.DRW 31-JUL-78 08:06 SHEET 1 OF 1 NEXT HIGHER ASSEMBLY: B-DD-M8532-0
FIRST USED ON OPTION/MODEL: KL10 BOARD LOCATION: 4AE31

TITLE: PRIORITY INTERRUPT PWR, GNDS, CAPS

SIZE	CODE	NUMBER	REV.
D	CS	M8532-0-PIC6	C

214

RESISTOR LOC(PIN)	SHOWN ON DRW#	REF	VALUE	TERMINATES SIGNAL
R228(1)	PIC5	C2	68Ω	%E1(3)
R9(1)	PIC2	B2	68Ω	%E10(4)
R226(1)	PIC5	B3	68Ω	%E14(14)
R70(1)	PIC2	B4	68Ω	%E14(2)
R122(1)	PIC2	A1	68Ω	%E15(15)
R230(1)	PIC5	D3	68Ω	%E16(14)
R107(1)	PIC4	C2	68Ω	%E17(15)
R121(1)	PIC2	C2	68Ω	%E17(2)
R255(1)	PIC4	C3	68Ω	%E18(14)
R71(1)	PIC2	A3	68Ω	%E18(3)
R233(1)	PIC5	A3	68Ω	%E19(2)
R23(1)	PIC5	D7	68Ω	%E19(3)
R86(1)	PIC5	C5	68Ω	%E20(14)
R5(1)	PIC5	C5	68Ω	%E20(2)
R16(1)	PIC5	C4	68Ω	%E20(3)
R17(1)	PIC5	C4	68Ω	%E24(14)
R74(1)	PIC4	D7	68Ω	%E24(2)
R246(1)	PIC4	C7	68Ω	%E24(9)
R227(1)	PIC5	C2	68Ω	%E26(2)
R263(1)	PIC4	C6	68Ω	%E26(3)
R43(1)	PIC2	D5	68Ω	%E35(14)
R6(1)	PIC2	A3	68Ω	%E4(15)
R247(1)	PIC4	D7	68Ω	%E4(3)
R201(1)	PIC3	B5	68Ω	%E45(2)
R205(1)	PIC3	B7	68Ω	%E45(3)
R13(1)	PIC2	A3	68Ω	%E46(6)
R30(1)	PIC2	D5	68Ω	%E49(14)
R162(1)	PIC2	D7	68Ω	%E49(3)
R22(1)	PIC5	D6	68Ω	%E54(6)
R101(1)	PIC4	C2	68Ω	%E58(14)
R211(1)	PIC1	A7	68Ω	%E60(14)
R215(1)	PIC1	B7	68Ω	%E60(2)
R276(1)	PIC1	B7	68Ω	%E60(3)
R98(1)	PIC1	C6	68Ω	%E63(14)
R158(1)	PIC1	C6	68Ω	%E63(15)
R92(1)	PIC1	D6	68Ω	%E63(2)
R58(1)	PIC1	D6	68Ω	%E63(3)
R213(1)	PIC1	A6	68Ω	%E65(14)
R217(1)	PIC1	B6	68Ω	%E65(2)
R278(1)	PIC1	B6	68Ω	%E65(3)

RESISTOR LOC(PIN)	SHOWN ON DRW#	REF	VALUE	TERMINATES SIGNAL
R103(1)	PIC1	C7	68Ω	%E68(14)
R155(1)	PIC1	C7	68Ω	%E68(15)
R53(1)	PIC1	D7	68Ω	%E68(2)
R57(1)	PIC1	D7	68Ω	%E68(3)
R113(1)	PIC2	A4	68Ω	%E7(2)
R14(1)	PIC2	B3	68Ω	%E7(7)
R3(1)	PIC2	B3	68Ω	%E8(3)
R7(1)	PIC2	A3	68Ω	%E9(2)
R149(1)	PIC3	C5	68Ω	-APR APR INTERRUPT H
R127(1)	PIC4	D4	68Ω	APR EBOX DISABLE CS H
R97(1)	PIC4	C2	68Ω	APR EBOX SEND F02 H
R120(1)	PIC2	B2	68Ω	APR EBUS DEMAND H
R236(1)	PIC5	D4	68Ω	-APR EBUS REQ H
R148(1)	PIC2	A7	68Ω	CLK PI H
R208(1)	PIC3	B7	68Ω	-CON CONO APR H
R79(1)	PIC4	C7	68Ω	-CON CONO PI H
R234(1)	PIC5	D4	68Ω	CON EBUS REL H
R80(1)	PIC5	D7	68Ω	-CON PI CYCLE B H
R190(1)	PIC5	C6	68Ω	-CON PI DISABLE H
R221(1)	PIC2	B7	68Ω	-CON PI DISMISS H
R110(1)	PIC2	B6	68Ω	-CON SET PIH H
R266(1)	PIC4	A8	68Ω	-DIAG READ FUNC 10X H
R220(1)	PIC1	B1	68Ω	EBUS PI00 E H
R116(1)	PIC4	B1	68Ω	EBUS PI01 E H
R117(1)	PIC4	B1	68Ω	EBUS PI02 E H
R48(1)	PIC4	B1	68Ω	EBUS PI03 E H
R262(1)	PIC4	B1	68Ω	EBUS PI04 E H
R41(1)	PIC4	A1	68Ω	EBUS PI05 E H
R197(1)	PIC4	A1	68Ω	EBUS PI06 E H
R192(1)	PIC4	A1	68Ω	EBUS PI07 E H
R172(1)	PIC2	A5	68Ω	EBUS XFER E H
R131(1)	PIC4	D3	68Ω	IR 03 H
R129(1)	PIC4	D3	68Ω	IR 04 H
R123(1)	PIC4	D3	68Ω	IR 05 H
R128(1)	PIC4	D3	68Ω	IR 06 H
R254(1)	PIC4	D2	68Ω	IR 07 H
R252(1)	PIC4	D2	68Ω	IR 08 H
R256(1)	PIC4	D2	68Ω	IR 09 H
R268(1)	PIC4	C6	68Ω	MR RESET 02 H
R225(1)	PIC5	B3	68Ω	-MTR 1 MHZ A H

RESISTOR LOC(PIN)	SHOWN ON DRW#	REF	VALUE	TERMINATES SIGNAL
R204(1)	PIC3	B5	68Ω	-MTR CONO MTR, H
R89(1)	PIC3	C6	68Ω	-MTR VECTOR INTERRUPT H
R112(1)	PIC1	D3	68Ω	PI2 PI1 REQ SET H
R66(1)	PIC1	D3	68Ω	PI2 PI2 REQ SET H
R69(1)	PIC1	C3	68Ω	PI2 PI3 REQ SET H
R70(1)	PIC1	C3	68Ω	PI2 PI4 REQ SET H
R223(1)	PIC1	B3	68Ω	PI2 PI5 REQ SET H
R224(1)	PIC1	B3	68Ω	PI2 PI6 REQ SET H
R290(1)	PIC1	A3	68Ω	PI2 PI7 REQ SET H
R243(1)	PIC4	A6	68Ω	PI4 XOR ON BUS L\#400\
R242(1)	PIC5	B7	68Ω	PI5 T BR2\#400\
R241(1)	PIC5	B7	68Ω	PI5 T BT2\#400\
R240(1)	PIC5	B7	68Ω	PI5 T BU2\#400\
R239(1)	PIC5	B7	68Ω	PI5 T BV2\#400\
R250(1)	PIC5	B7	68Ω	PI5 T CM2\#400\
R249(1)	PIC5	A7	68Ω	PI5 T CP1\#400\
R248(1)	PIC5	A7	68Ω	PI5 T CS2\#400\
R264(1)	PIC5	A7	68Ω	PI5 T DC1\#400\
R267(1)	PIC5	A7	68Ω	PI5 T DD1\#400\
R270(1)	PIC5	A7	68Ω	PI5 T DS1\#400\
R269(1)	PIC5	A7	68Ω	PI5 T EA1\#400\
R273(1)	PIC5	A7	68Ω	PI5 T ED1\#400\
R277(1)	PIC5	A7	68Ω	PI5 T EE2\#400\
R272(1)	PIC5	A7	68Ω	PI5 T EK2\#400\
R274(1)	PIC5	A7	68Ω	PI5 T EL2\#400\
R20(1)	PIC1	D1	68Ω	PIC1 ACTIVE H
R281(1)	PIC1	D1	68Ω	-PIC1 ACTIVE H
R61(1)	PIC1	D1	68Ω	-PIC1 ACTIVE B H
R184(1)	PIC1	D5	68Ω	PIC1 GEN 1 H
R93(1)	PIC1	D5	68Ω	-PIC1 GEN 1 H
R186(1)	PIC1	D5	68Ω	PIC1 GEN 2 H
R47(1)	PIC1	D5	68Ω	-PIC1 GEN 2 H
R181(1)	PIC1	C5	68Ω	PIC1 GEN 3 H
R63(1)	PIC1	C5	68Ω	-PIC1 GEN 3 H
R145(1)	PIC1	C5	68Ω	PIC1 GEN 4 H
R55(1)	PIC1	C5	68Ω	-PIC1 GEN 4 H
R142(1)	PIC1	B5	68Ω	PIC1 GEN 5 H
R285(1)	PIC1	B5	68Ω	-PIC1 GEN 5 H
R138(1)	PIC1	B5	68Ω	PIC1 GEN 6 H
R283(1)	PIC1	B5	68Ω	-PIC1 GEN 6 H

RESISTOR LOC(PIN)	SHOWN ON DRW#	REF	VALUE	TERMINATES SIGNAL
R140(1)	PIC1	A5	68Ω	PIC1 GEN 7 H
R207(1)	PIC1	A5	68Ω	-PIC1 GEN 7 H
R183(1)	PIC1	D7	68Ω	PIC1 ON 1 H
R49(1)	PIC1	D7	68Ω	-PIC1 ON 1 H
R185(1)	PIC1	D7	68Ω	PIC1 ON 2 H
R91(1)	PIC1	D7	68Ω	-PIC1 ON 2 H
R178(1)	PIC1	C7	68Ω	PIC1 ON 3 H
R65(1)	PIC1	C7	68Ω	-PIC1 ON 3 H
R144(1)	PIC1	C7	68Ω	PIC1 ON 4 H
R56(1)	PIC1	C7	68Ω	-PIC1 ON 4 H
R135(1)	PIC1	B7	68Ω	PIC1 ON 5 H
R286(1)	PIC1	B7	68Ω	-PIC1 ON 5 H
R141(1)	PIC1	B7	68Ω	PIC1 ON 6 H
R284(1)	PIC1	B7	68Ω	-PIC1 ON 6 H
R137(1)	PIC1	A7	68Ω	PIC1 ON 7 H
R202(1)	PIC1	A7	68Ω	-PIC1 ON 7 H
R143(1)	PIC1	D2	68Ω	PIC1 PIH1 H
R146(1)	PIC1	D2	68Ω	PIC1 PIH2 H
R147(1)	PIC1	C2	68Ω	PIC1 PIH3 H
R259(1)	PIC1	C2	68Ω	PIC1 PIH4 H
R260(1)	PIC1	B2	68Ω	PIC1 PIH5 H
R257(1)	PIC1	B2	68Ω	PIC1 PIH6 H
R179(1)	PIC1	A2	68Ω	PIC1 PIH7 H
R59(1)	PIC1	D4	68Ω	PIC1 PIR EN 1 H
R64(1)	PIC1	C4	68Ω	PIC1 PIR EN 2 H
R60(1)	PIC1	C4	68Ω	PIC1 PIR EN 3 H
R68(1)	PIC1	B4	68Ω	PIC1 PIR EN 4 H
R218(1)	PIC1	B4	68Ω	PIC1 PIR EN 5 H
R219(1)	PIC1	A4	68Ω	PIC1 PIR EN 6 H
R216(1)	PIC1	A4	68Ω	PIC1 PIR EN 7 H
R105(1)	PIC1	B1	68Ω	PIC1 PIR0 H
R106(1)	PIC1	C1	68Ω	PIC1 PIR1 H
R99(1)	PIC1	C1	68Ω	PIC1 PIR2 H
R104(1)	PIC1	C1	68Ω	PIC1 PIR3 H
R163(1)	PIC1	C1	68Ω	PIC1 PIR4 H
R164(1)	PIC1	B1	68Ω	PIC1 PIR5 H
R159(1)	PIC1	B1	68Ω	PIC1 PIR6 H
R160(1)	PIC1	B1	68Ω	PIC1 PIR7 H
R188(1)	PIC2	A5	68Ω	PIC2 APR REQUESTING H
R109(1)	PIC2	A7	68Ω	PIC2 CLK A H

NOTE:

1. ALL TERMINATORS HAVE PIN TWO CONNECTED TO -2.0V AND ARE 5% 1/4WATT UNLESS OTHERWISE SPECIFIED
2. ENTRIES ARE SORTED BY SIGNAL NAME
3. % INDICATES OUTPUT OF DIP LOC AND () INDICATES PIN NUMBER

"THIS DRAWING AND SPECIFICATIONS, HEREIN, ARE THE PROPERTY OF DIGITAL EQUIPMENT CORPORATION AND SHALL NOT BE REPRODUCED OR COPIED OR USED IN WHOLE OR IN PART AS THE BASIS FOR THE MANUFACTURE OR SALE OF ITEMS WITHOUT WRITTEN PERMISSION.
COPYRIGHT © 1977, DIGITAL EQUIPMENT CORPORATION"

REVISIONS		
CHK	CHANGE NO.	REV

digital

DRN. C Smith DATE 25-MAY-77 ENG. DATE 6-JUN-77
CHK'D DATE BOARD LOCATION: SHEET 1 OF 2
R05321.DRW4,5671 [26-MAY-77 09:16] NEXT HIGHER ASSEMBLY: B-DD-M8532-0
FIRST USED ON OPTION/MODEL: KL10

TITLE: PRIORITY INTR TERMINATORS

SIZE	CODE	NUMBER	REV.
D	CS	M8532-0-RES	C

215

RESISTOR LOC(PIN)	SHOWN ON DRW#	REF	VALUE	TERMINATES SIGNAL
R208(1)	PIC2	A7	68Ω	PIC2 CLK B H
R203(1)	PIC2	A7	68Ω	PIC2 CLK C H
R232(1)	PIC2	A7	68Ω	PIC2 CLK D H
R169(1)	PIC2	A7	68Ω	PIC2 CLK E H
R4(1)	PIC2	A7	68Ω	PIC2 CLK F H
R235(1)	PIC2	D1	68Ω	PIC2 COMP H
R75(1)	PIC2	B4	68Ω	-PIC2 DISABLE RDY ON HALT H
R261(1)	PIC2	A5	68Ω	PIC2 DK20 REQUESTING H
R195(1)	PIC2	C4	68Ω	PIC2 EBUS RETURN H
R174(1)	PIC2	C4	68Ω	-PIC2 EBUS RETURN H
R1(1)	PIC2	B1	68Ω	PIC2 HONOR INTERNAL H
R176(1)	PIC2	B1	68Ω	-PIC2 HONOR INTERNAL H
R37(1)	PIC2	D4	68Ω	PIC2 PHY FORCE H
R35(1)	PIC2	B7	68Ω	PIC2 PHY NO. 00 H
R31(1)	PIC2	B7	68Ω	PIC2 PHY NO. 01 H
R29(1)	PIC2	B7	68Ω	PIC2 PHY NO. 02 H
R26(1)	PIC2	B7	68Ω	PIC2 PHY NO. 03 H
R25(1)	PIC2	A7	68Ω	PIC2 PHY NO. 04 H
R21(1)	PIC2	A7	68Ω	PIC2 PHY NO. 05 H
R24(1)	PIC2	B6	68Ω	PIC2 PHY NO. 06 H
R32(1)	PIC2	B6	68Ω	PIC2 PHY NO. 07 H
R42(1)	PIC2	B6	68Ω	PIC2 PHY NO. 08 H
R38(1)	PIC2	B6	68Ω	PIC2 PHY NO. 09 H
R28(1)	PIC2	A6	68Ω	PIC2 PHY NO. 10 H
R34(1)	PIC2	A6	68Ω	PIC2 PHY NO. 11 H
R33(1)	PIC2	B5	68Ω	PIC2 PHY NO. 12 H
R27(1)	PIC2	B5	68Ω	PIC2 PHY NO. 13 H
R39(1)	PIC2	B5	68Ω	PIC2 PHY NO. 14 H
R36(1)	PIC2	B5	68Ω	PIC2 PHY NO. 15 H
R83(1)	PIC2	D7	68Ω	PIC2 PI ON 0 H
R251(1)	PIC2	D6	68Ω	PIC2 PI1 H
R100(1)	PIC2	C7	68Ω	-PIC2 PI1 CLR H
R253(1)	PIC2	D6	68Ω	PIC2 PI2 H
R111(1)	PIC2	C7	68Ω	-PIC2 PI2 CLR H
R100(1)	PIC2	C7	68Ω	-PIC2 PI3 CLR H
R44(1)	PIC2	D7	68Ω	-PIC2 PI4 H
R165(1)	PIC2	C7	68Ω	-PIC2 PI4 CLR H
R168(1)	PIC2	C7	68Ω	-PIC2 PI5 CLR H
R167(1)	PIC2	C7	68Ω	-PIC2 PI6 CLR H
R166(1)	PIC2	B7	68Ω	-PIC2 PI7 CLR H

RESISTOR LOC(PIN)	SHOWN ON DRW#	REF	VALUE	TERMINATES SIGNAL
R10(1)	PIC2	D6	68Ω	PIC2 REQ H
R125(1)	PIC2	D4	68Ω	PIC2 SEL PHY 1 H
R124(1)	PIC2	D4	68Ω	PIC2 SEL PHY 2 H
R130(1)	PIC2	D4	68Ω	PIC2 SEL PHY 4 H
R132(1)	PIC2	D4	68Ω	PIC2 SEL PHY 8 H
R182(1)	PIC2	B4	68Ω	PIC2 STATE HOLD H
R175(1)	PIC2	C2	68Ω	PIC2 TIM 5,6 H
R245(1)	PIC2	C2	68Ω	-PIC2 TIM 5,6 H
R119(1)	PIC2	D3	68Ω	PIC2 TIM1 H
R11(1)	PIC2	D2	68Ω	-PIC2 TIM1 H
R126(1)	PIC2	D3	68Ω	PIC2 TIM2 H
R40(1)	PIC2	D3	68Ω	PIC2 TIM3 H
R230(1)	PIC2	D3	68Ω	PIC2 TIM4 H
R171(1)	PIC2	D2	68Ω	-PIC2 TIM4 H
R8(1)	PIC2	D1	68Ω	PIC2 TIM5 H
R258(1)	PIC2	D1	68Ω	PIC2 TIM6 H
R85(1)	PIC2	D1	68Ω	-PIC2 TIM6 H
R10(1)	PIC2	D1	68Ω	PIC2 TIM7 H
R194(1)	PIC2	A1	68Ω	PIC2 TIMER DONE H
R77(1)	PIC2	B1	68Ω	-PIC2 TIMER DONE H
R114(1)	PIC2	B4	68Ω	PIC2 TRAN REC H
R76(1)	PIC2	B3	68Ω	-PIC2 TRAN REC H
R87(1)	PIC3	B2	68Ω	PIC3 APR PHY NO. H
R94(1)	PIC3	B3	68Ω	-PIC3 APR PHY NO. H
R88(1)	PIC3	C2	68Ω	PIC3 DK20 PHY NO. H
R72(1)	PIC3	D3	68Ω	-PIC3 DK20 PHY NO. H
R115(1)	PIC3	D5	68Ω	PIC3 PI01 H
R118(1)	PIC3	D5	68Ω	PIC3 PI02 H
R150(1)	PIC3	D5	68Ω	PIC3 PI03 H
R265(1)	PIC3	D5	68Ω	PIC3 PI04 H
R151(1)	PIC3	D5	68Ω	PIC3 PI05 H
R198(1)	PIC3	D4	68Ω	PIC3 PI06 H
R191(1)	PIC3	D4	68Ω	PIC3 PI07 H
R189(1)	PIC4	A7	68Ω	PIC4 BUS EN H
R136(1)	PIC4	A7	68Ω	-PIC4 BUS EN H
R12(1)	PIC4	D7	68Ω	-PIC4 COND DLY H
R133(1)	PIC4	B7	68Ω	PIC4 DIAG 05 H
R139(1)	PIC4	B6	68Ω	PIC4 DIAG 06 H
R180(1)	PIC4	B7	68Ω	PIC4 DIAG 10 H
R275(1)	PIC4	D6	68Ω	-PIC4 GEN CLR H

RESISTOR LOC(PIN)	SHOWN ON DRW#	REF	VALUE	TERMINATES SIGNAL
R51(1)	PIC4	D6	68Ω	-PIC4 GEN SET H
R50(1)	PIC4	B1	68Ω	-PIC4 IO REQ1 H
R90(1)	PIC4	B1	68Ω	-PIC4 IO REQ2 H
R102(1)	PIC4	B1	68Ω	-PIC4 IO REQ3 H
R62(1)	PIC4	B1	68Ω	-PIC4 IO REQ4 H
R289(1)	PIC4	A1	68Ω	-PIC4 IO REQ5 H
R282(1)	PIC4	A1	68Ω	-PIC4 IO REQ6 H
R212(1)	PIC4	A1	68Ω	-PIC4 IO REQ7 H
R54(1)	PIC4	B3	68Ω	-PIC4 IOB 11 H
R52(1)	PIC4	B3	68Ω	-PIC4 IOB 12 H
R96(1)	PIC4	B3	68Ω	-PIC4 IOB 13 H
R161(1)	PIC4	B3	68Ω	-PIC4 IOB 14 H
R196(1)	PIC4	A3	68Ω	PIC4 IOB 15 H
R214(1)	PIC4	A3	68Ω	-PIC4 IOB 15 H
R200(1)	PIC4	A3	68Ω	PIC4 IOB 16 H
R279(1)	PIC4	A3	68Ω	-PIC4 IOB 16 H
R199(1)	PIC4	A3	68Ω	PIC4 IOB 17 H
R210(1)	PIC4	A3	68Ω	-PIC4 IOB 17 H
R229(1)	PIC4	C6	68Ω	PIC4 MR RESET H
R170(1)	PIC4	C6	68Ω	-PIC4 MR RESET H
R209(1)	PIC4	D5	68Ω	PIC4 OFF H
R84(1)	PIC4	C4	68Ω	PIC4 OK ON HALT H
R206(1)	PIC4	D5	68Ω	-PIC4 ON H
R271(1)	PIC4	D5	68Ω	-PIC4 ON CLR H
R280(1)	PIC4	D6	68Ω	-PIC4 ON SET H
R287(1)	PIC4	C6	68Ω	PIC4 SYS CLR H
R154(1)	PIC4	D6	68Ω	-PIC4 SYS CLR A H
R67(1)	PIC4	D6	68Ω	PIC4 SYS CLR B H
R177(1)	PIC5	A2	68Ω	-PIC5 BUS EN H
R231(1)	PIC5	D4	68Ω	PIC5 CP BUS EN H
R193(1)	PIC5	D1	68Ω	PIC5 CYC START H
R73(1)	PIC5	D1	68Ω	-PIC5 CYC START H
R244(1)	PIC5	D3	68Ω	-PIC5 EBUS CP GRANT H
R2(1)	PIC5	D3	68Ω	PIC5 EBUS PI GRANT H
R82(1)	PIC5	D3	68Ω	-PIC5 EBUS PI GRANT H
R134(1)	PIC5	C4	68Ω	PIC5 EBUS REQ H
R237(1)	PIC5	C4	68Ω	-PIC5 EBUS REQ H
R152(1)	PIC5	C7	68Ω	PIC5 GEN 1 H
R156(1)	PIC5	C7	68Ω	PIC5 GEN 2 H
R157(1)	PIC5	C7	68Ω	PIC5 GEN 4 H

RESISTOR LOC(PIN)	SHOWN ON DRW#	REF	VALUE	TERMINATES SIGNAL
R187(1)	PIC5	B5	68Ω	PIC5 GEN INT H
R95(1)	PIC5	B5	68Ω	-PIC5 GEN INT H
R153(1)	PIC5	C7	68Ω	PIC5 GEN ON H
R81(1)	PIC5	D7	68Ω	-PIC5 INHIBIT REQ H
R222(1)	PIC5	D6	68Ω	PIC5 LOAD H
R15(1)	PIC5	C6	68Ω	-PIC5 PI DISABLE H
R19(1)	PIC5	D6	68Ω	PIC5 TEST H
R46(1)	PIC5	D6	68Ω	PIC5 WAIT1 H
R45(1)	PIC5	D6	68Ω	PIC5 WAIT2 H
R173(1)	PIC5	C2	68Ω	PIC5 XFER FORCE H

NOTE:

1. ALL TERMINATORS HAVE PIN TWO CONNECTED TO -2.0V AND ARE 5% 1/4WATT UNLESS OTHERWISE SPECIFIED
2. ENTRIES ARE SORTED BY SIGNAL NAME
3. % INDICATES OUTPUT OF DIP LOC AND ( ) INDICATES PIN NUMBER

"THIS DRAWING AND SPECIFICATIONS, HEREIN, ARE THE PROPERTY OF DIGITAL EQUIPMENT CORPORATION AND SHALL NOT BE REPRODUCED OR COPIED OR USED IN WHOLE OR IN PART AS THE BASIS FOR THE MANUFACTURE OR SALE OF ITEMS WITHOUT WRITTEN PERMISSION. COPYRIGHT © 1977, DIGITAL EQUIPMENT CORPORATION"

REVISIONS		
CHK	CHANGE NO.	REV

digital

DRN. C Smith DATE 26-MAY-77 ENG. DATE
CHK DATE 5/27/77 BOARD LOCATION: SHEET 2 OF 2
R8532.DRW[4,567] 26-MAY-77 09:21 NEXT HIGHER ASSEMBLY:
FIRST USED ON OPTION/MODEL: KL10 B-DD-M8532-0

TITLE: PRIORITY INTR TERMINATORS

SIZE	CODE	NUMBER	REV.
D	CS	M8532-0-RES	C

MF

210

REVISION CONTROL SHEET

CUSTOMER PRINT SET	MFG SET	DRAWING NO	NO OF SHT	DESCRIPTION	OPTION NO/FILE DATE	REVISIONS
			-	MODULE REVISION		A
		D-UA-M8549-YB-Ø	5	CHAN CONTROL WORD SUBSTITUTE BD		-
		D-CS-M8549-YB-CCWS	1	CHAN CONTROL WORD SUBSTITUTE		-
		K-CO-M8549-YB-4	1	CHAN CONTROL WORD SUBSTITUTE BD (CALDEC DATA BASE)		A
		D-AH-M8549-YB-5	4	CHAN CONTROL WORD SUBSTITUTE BD		-
		B-MH-M8549-YB-6	1	MODULE ECO HISTORY		-
		5011495	-	ETCHED CIRCUIT BOARD		A
		P00-M8549-YB		PROCESS SHEET (REF ONLY)		-

CUSTOMER PRINT SET CODES
X = PRINT OF DOCUMENT INCLUDED IN PRINT SET
C = INCLUDES ALL PRINTS INDICATED ON DOCUMENT
S = CONFIDENTIAL AUTHORIZED SIGNATURE REQUIRED

ECO NO: ORIG

TITLE		SIZE	CODE	NUMBER	REV
CHAN CONTROL WORD SUBSTITUTE BD	SHEET 2 OF 2	B	DD	M8549-YB-Ø	

217

MR

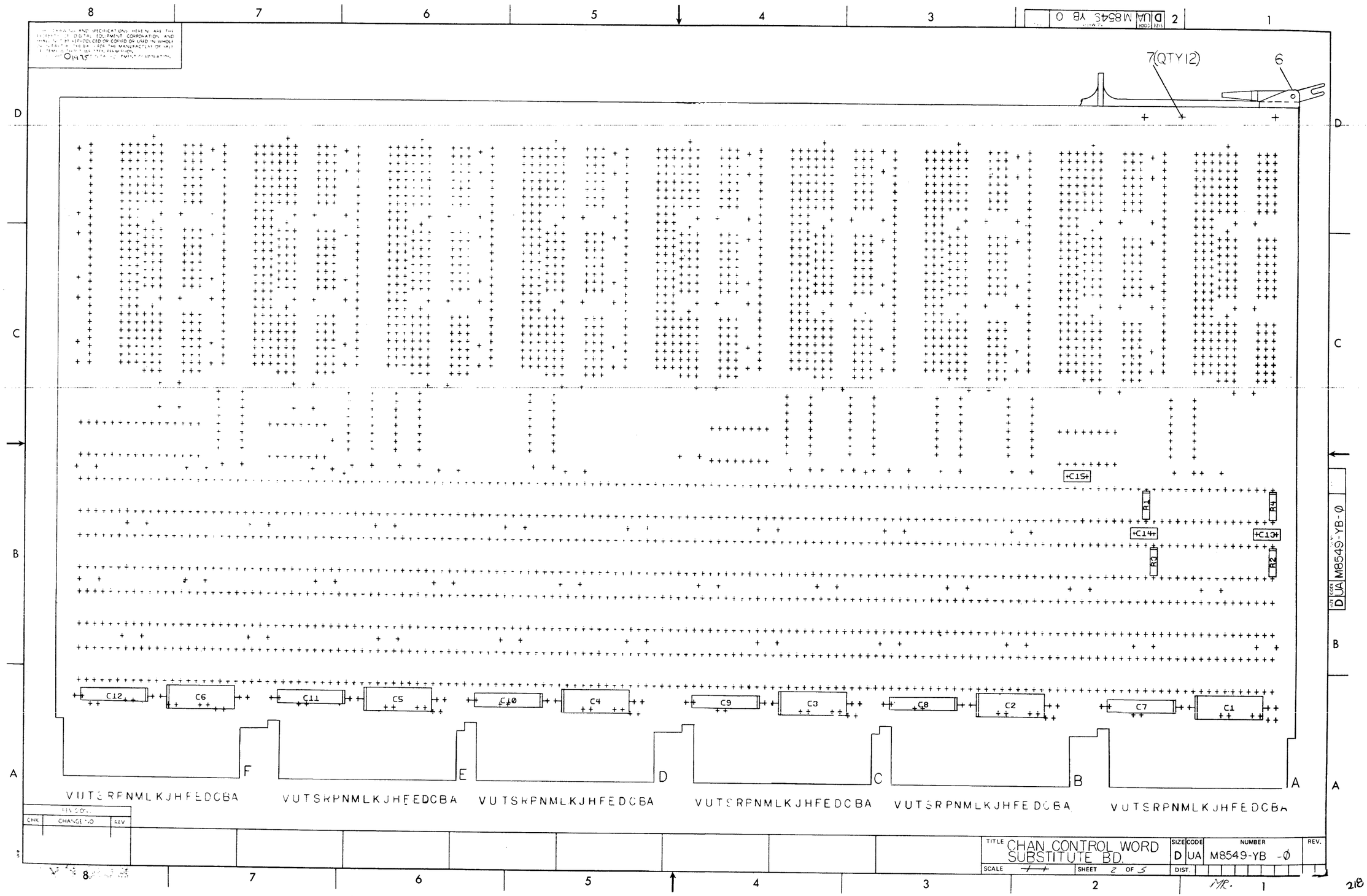
7(QTY12)
6
C12
C6
C11
C5
C10
C4
C9
C3
C8
C2
C7
C1
C15
C14
C13
R1
R2
R3
R4
VUTSRPNMLKJHFEDCBA
VUTSRPNMLKJHFEDCBA
VUTSRPNMLKJHFEDCBA
VUTSRPNMLKJHFEDCBA
VUTSRPNMLKJHFEDCBA
VUTSRPNMLKJHFEDCBA
CHK
CHANGE NO
REV
TITLE CHAN CONTROL WORD SUBSTITUTE BD.
SIZE D
CODE UA
NUMBER M8549-YB -Ø
REV.
SCALE
SHEET 2 OF 5
DIST.
SIZE D
CODE UA
M8549-YB-Ø

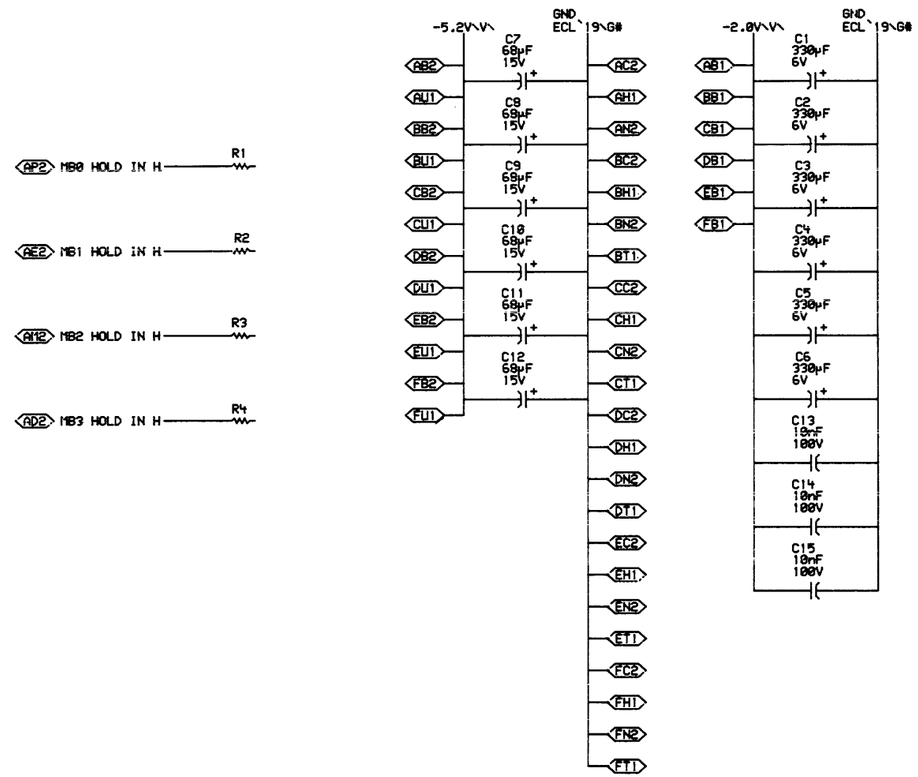

NOTE:

1. THE FOLLOWING PIN NUMBERS APPLY TO ECL DIP PACKAGES

GND	-5.2	MANUFACTURES' PART NUMBER
1 16	8	ALL 10,000 SERIES UNLESS OTHERWISE SPECIFIED
1 15 16	8	10110 & 10210
16	8	10158 & 10173

1 OF 1

"THIS DRAWING AND SPECIFICATIONS, HEREIN, ARE THE PROPERTY OF DIGITAL EQUIPMENT CORPORATION AND SHALL NOT BE REPRODUCED OR COPIED OR USED IN WHOLE OR IN PART AS THE BASIS FOR THE MANUFACTURE OR SALE OF ITEMS WITHOUT WRITTEN PERMISSION.
COPYRIGHT 1975, DIGITAL EQUIPMENT CORPORATION"

REVISIONS		
CHK	CHANGE NO.	REV

digital

DRN | DATE 2-19-75 | ENG. | DATE 02-19-75
CHK'D | DATE 2-19-75 | BOARD LOCATION: | SHEET ___ OF ___
CCWS[4,121] 19-FEB-75 09:10 | NEXT HIGHER ASSEMBLY: B-DD-M8549-YB
BASED ON OPTION/MODEL: KL10

TITLE: CHANNEL CONTROL WORD SUBSTITUTE

SIZE	CODE	NUMBER	REV.
D	CS	M8549-YB-CCWS	

219

M/R

REVISION CONTROL SHEET

CUSTOMER PRINT SET	MFG SET	DRAWING NO	NO OF SHT	DESCRIPTION	OPTION NO/FILE DATE	REVISIONS		
				MODULE REVISION		A	B	C
		D-UA-M8533-Ø-Ø	5	CHANNEL CONTROL		-	A	B
		D-CS-M8533-Ø-CHC1	1	CHANNEL CONTROL			A	B
		D-CS-M8533-Ø-CHC2	1	CHANNEL CONTROL			A	B
		D-CS-M8533-Ø-CHC3	1	CHANNEL CONTROL			A	B
		D-CS-M8533-Ø-CHC4	1	CHANNEL CONTROL			A	B
		D-CS-M8533-Ø-CHC5	1	CHANNEL CONTROL			A	B
		D-CS-M8533-Ø-CHC6	1	CHANNEL CONTROL PWR AND GND			A	B
		D-CS-M8533-RES	2	CHANNEL CONTROL TERMINATORS			A	B
		K-CO-M8533-Ø-4	1	CHANNEL CONTROL (CALDEC DATA BASE)		B	B	B
		D-AH-M8533-Ø-5	4	CHANNEL CONTROL		A	A	A
		B-MH-M8533-Ø-6	1	MODULE ECO HISTORY		REF	—	—
		5010923	-	ETCH CIRCUIT BOARD		B	B	B
		P00-M8533-ØØ		PROCESS SHEET (REF ONLY)		-		

CUSTOMER PRINT SET CODES
X = PRINT OF DOCUMENT INCLUDED IN PRINT SET
C = INCLUDES ALL PRINTS INDICATED ON DOCUMENT
S = CONFIDENTIAL AUTHORIZED SIGNATURE REQUIRED

ECO NO	ORIG	00001	00002

TITLE	SHEET	SIZE	CODE	NUMBER	REV
CHANNEL CONTROL	SHEET 2 OF 2	B	DD	M8533-Ø	B

MR

"THIS DRAWING AND SPECIFICATIONS, HEREIN, ARE THE PROPERTY OF DIGITAL EQUIPMENT CORPORATION AND SHALL NOT BE REPRODUCED OR COPIED OR USED IN WHOLE OR IN PART AS THE BASIS FOR THE MANUFACTURE OR SALE OF ITEMS WITHOUT WRITTEN PERMISSION. COPYRIGHT © 1975 DIGITAL EQUIPMENT CORPORATION"

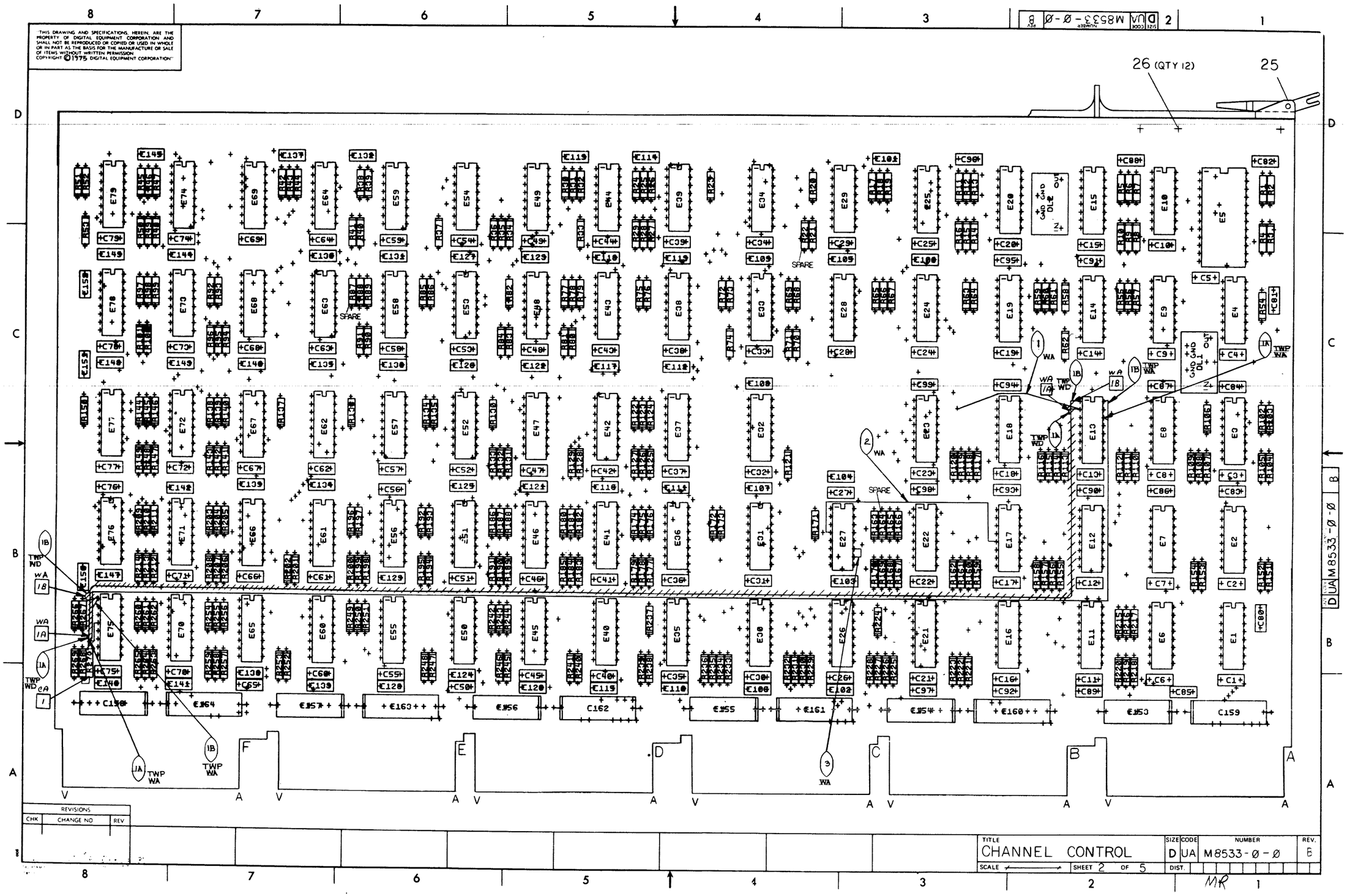

REVISIONS		
CHK	CHANGE NO	REV

TITLE	SIZE	CODE	NUMBER	REV.
CHANNEL CONTROL	D	UA	M8533-0-0	B
SCALE	SHEET 2 OF 5	DIST.		

MR

221

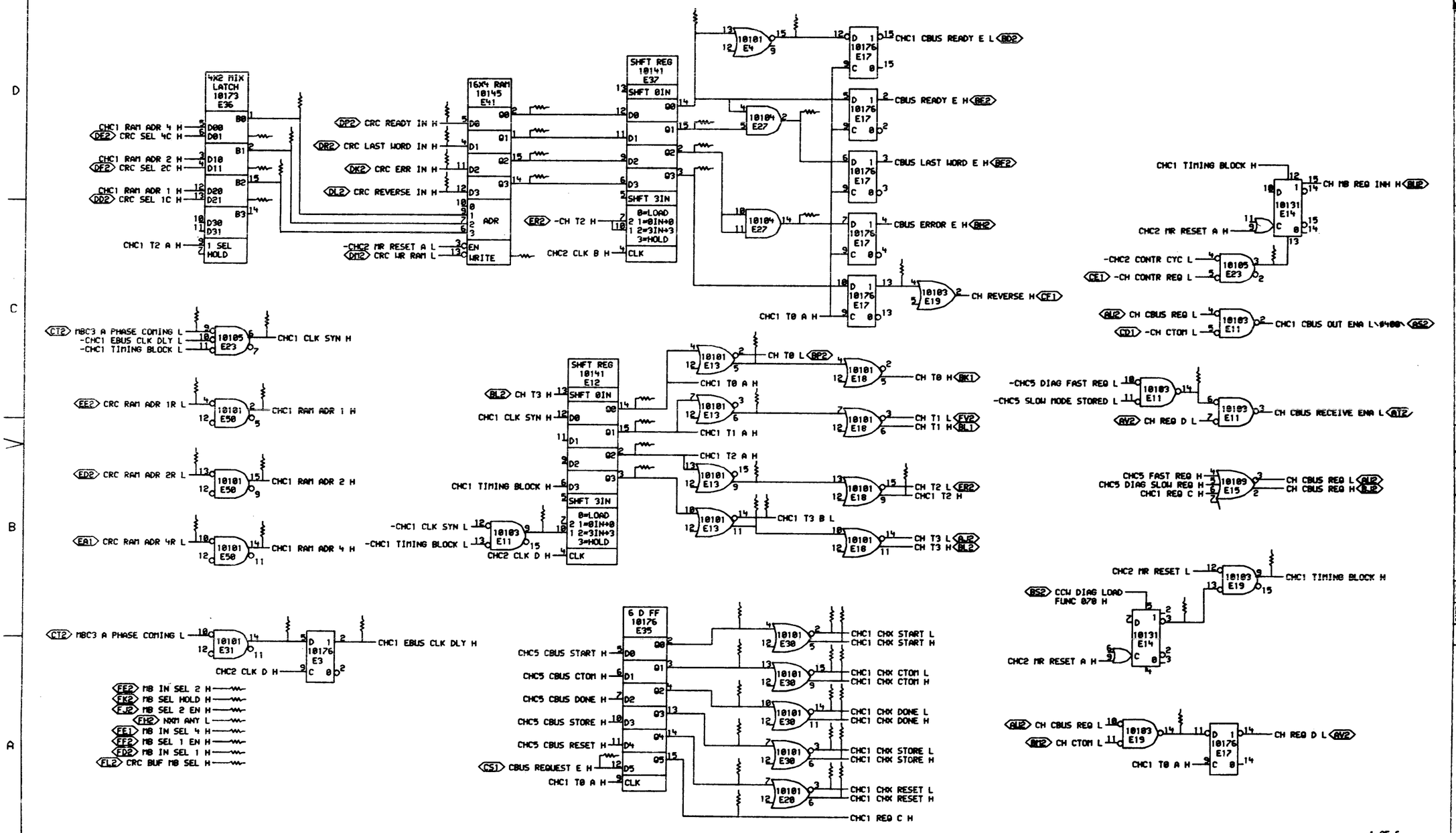

1 OF 6

"THIS DRAWING AND SPECIFICATIONS, HEREIN, ARE THE PROPERTY OF DIGITAL EQUIPMENT CORPORATION AND SHALL NOT BE REPRODUCED OR COPIED OR USED IN WHOLE OR IN PART AS THE BASIS FOR THE MANUFACTURE OR SALE OF ITEMS WITHOUT WRITTEN PERMISSION. COPYRIGHT © 1977, DIGITAL EQUIPMENT CORPORATION"

REVISIONS		
CHK	CHANGE NO.	REV
G.W.	M8533-00002	B
	M. SCHWARTZ	

digital

DRN: DATE 06-JAN-77 | ENG: DATE 1/12/77 | TITLE: CHANNEL CONTROL

CHC1EF.DR(4,570) 10-JAN-77 09:41 | BOARD LOCATION: 4AF09 | SHEET 1 OF 1

FIRST USED ON OPTION/MODEL: KL10 | NEXT HIGHER ASSEMBLY: B-DD-M8533-0

SIZE	CODE	NUMBER	REV.
D	CS	M8533-0-CHC1	B

MR 1

222

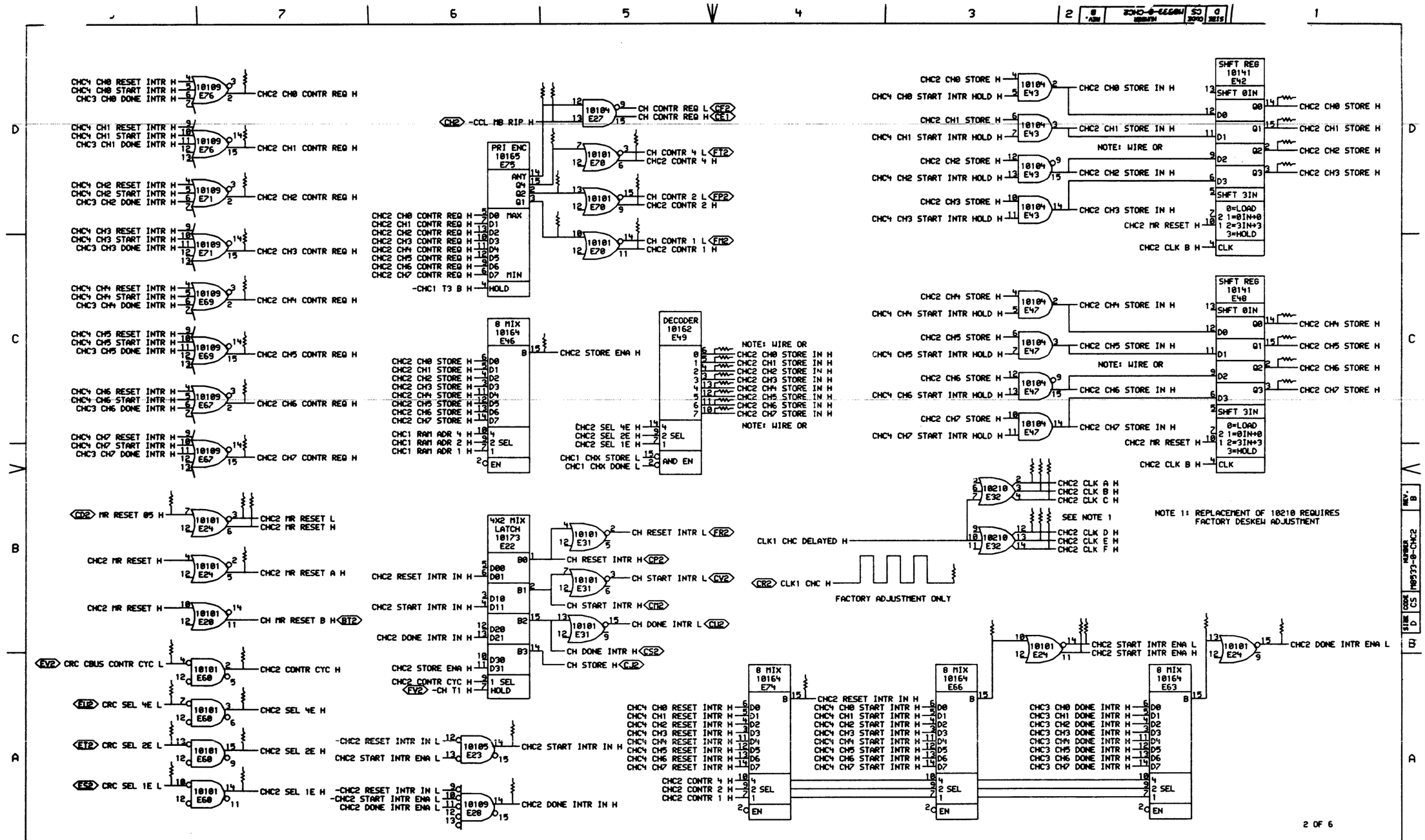

"THIS DRAWING AND SPECIFICATIONS, HEREIN, ARE THE PROPERTY OF DIGITAL EQUIPMENT CORPORATION AND SHALL NOT BE REPRODUCED OR COPIED OR USED IN WHOLE OR IN PART AS THE BASIS FOR THE MANUFACTURE OR SALE OF ITEMS WITHOUT WRITTEN PERMISSION. COPYRIGHT © 1977, DIGITAL EQUIPMENT CORPORATION"

REVISIONS		
CHK	CHANGE NO.	REV
CA1	M8533-00002	B

digital

DRW: DATE 06-JAN-77 ENG: DATE 1/12/77
DATE 1/10/77 BOARD LOCATION: 4AF09
SHEET 1 OF 1
CHC2EF.DRW[4,570] 06-JAN-77 10:45 NEXT HIGHER ASSEMBLY: B-DD-M8533-0
FIRST USED ON OPTION/MODEL: KL10

TITLE: CHANNEL CONTROL

SIZE	CODE	NUMBER	REV.
D	CS	M8533-0-CHC2	B

MR

223

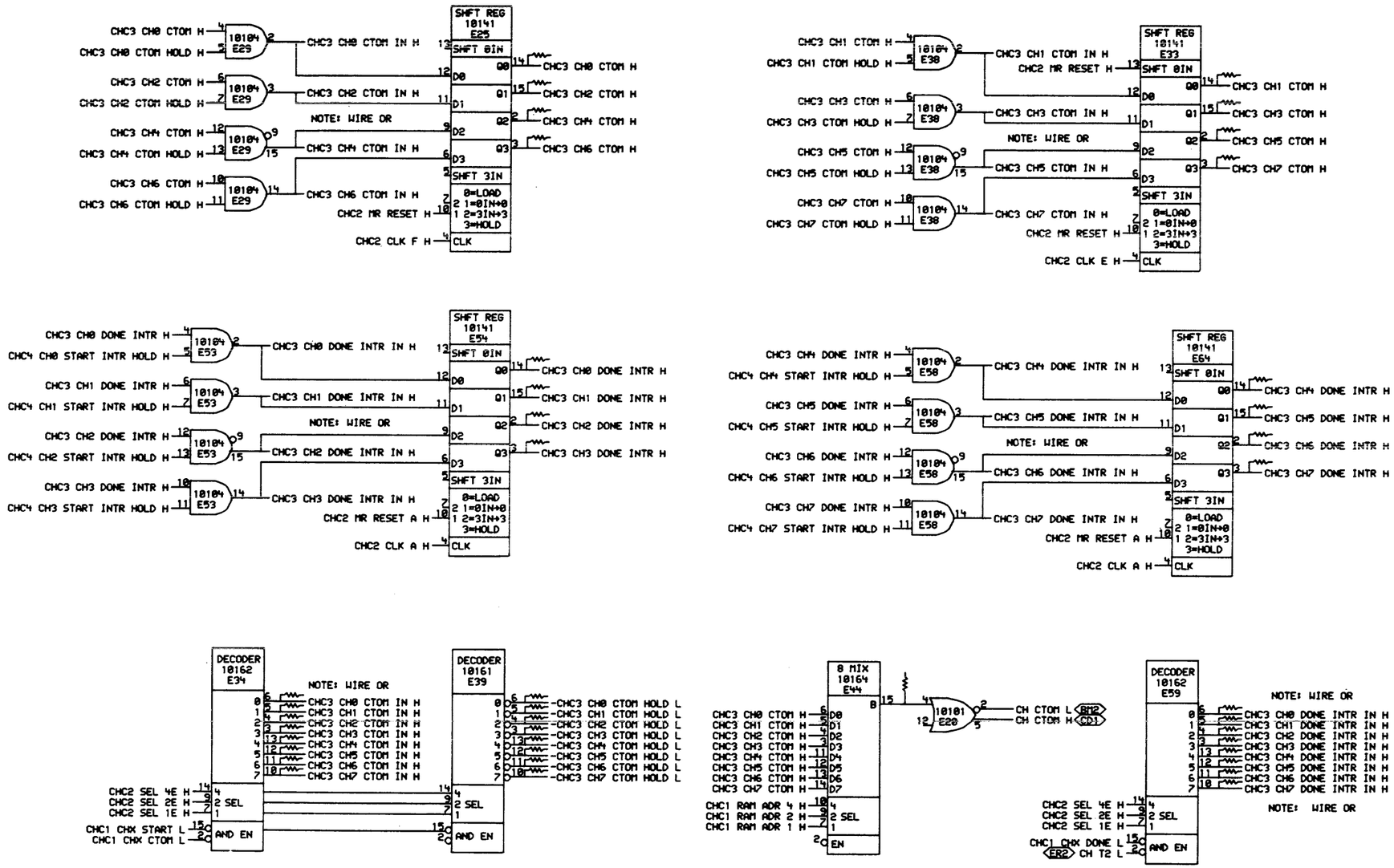

"THIS DRAWING AND SPECIFICATIONS, HEREIN, ARE THE PROPERTY OF DIGITAL EQUIPMENT CORPORATION AND SHALL NOT BE REPRODUCED OR COPIED OR USED IN WHOLE OR IN PART AS THE BASIS FOR THE MANUFACTURE OR SALE OF ITEMS WITHOUT WRITTEN PERMISSION. COPYRIGHT © 1977, DIGITAL EQUIPMENT CORPORATION"

REVISIONS		
CHK	CHANGE NO.	REV
		B

digital

DRN.	DATE 06-JAN-77	ENG.	DATE 1/12/77
CHC3EF.DRW[4,570] 06-JAN-77 10:52		BOARD LOCATION: 4AF09 SHEET 1 OF 1	
FIRST USED ON OPTION/MODEL: KL10		NEXT HIGHER ASSEMBLY: B-DD-M8533-0	

TITLE: CHANNEL CONTROL

SIZE	CODE	NUMBER	REV.
D	CS	M8533-0-CHC3	B

224

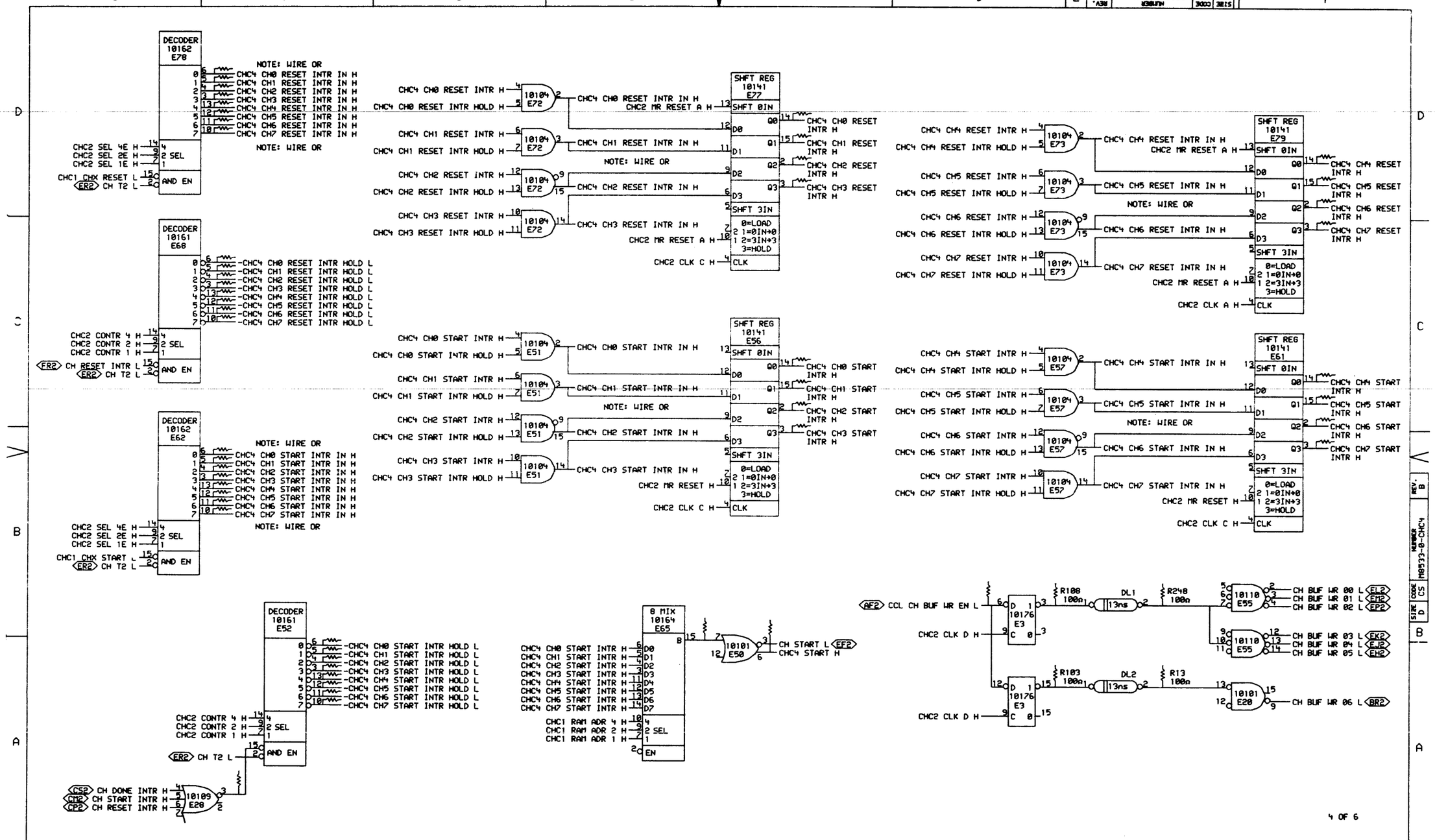

"THIS DRAWING AND SPECIFICATIONS, HEREIN, ARE THE PROPERTY OF DIGITAL EQUIPMENT CORPORATION AND SHALL NOT BE REPRODUCED OR COPIED OR USED IN WHOLE OR IN PART AS THE BASIS FOR THE MANUFACTURE OR SALE OF ITEMS WITHOUT WRITTEN PERMISSION. COPYRIGHT © 1977, DIGITAL EQUIPMENT CORPORATION"

REVISIONS		
CHK	CHANGE NO.	REV
Q.W.	M8533-00002	B

SCHWAB

digital

DRN: DATE 06-JAN-77
CHK: DATE 1/10/77
ENG: DATE 1/12/77
CHC4EF.DRW[4,570] 06-JAN-77 10:55
BOARD LOCATION: 4AF03
SHEET 1 OF 1
NEXT HIGHER ASSEMBLY: B-DD-M8533-0
FIRST USED ON OPTION/MODEL:

TITLE: CHANNEL CONTROL

SIZE	CODE	NUMBER	REV.
D	CS	M8533-0-CHC4	B

225

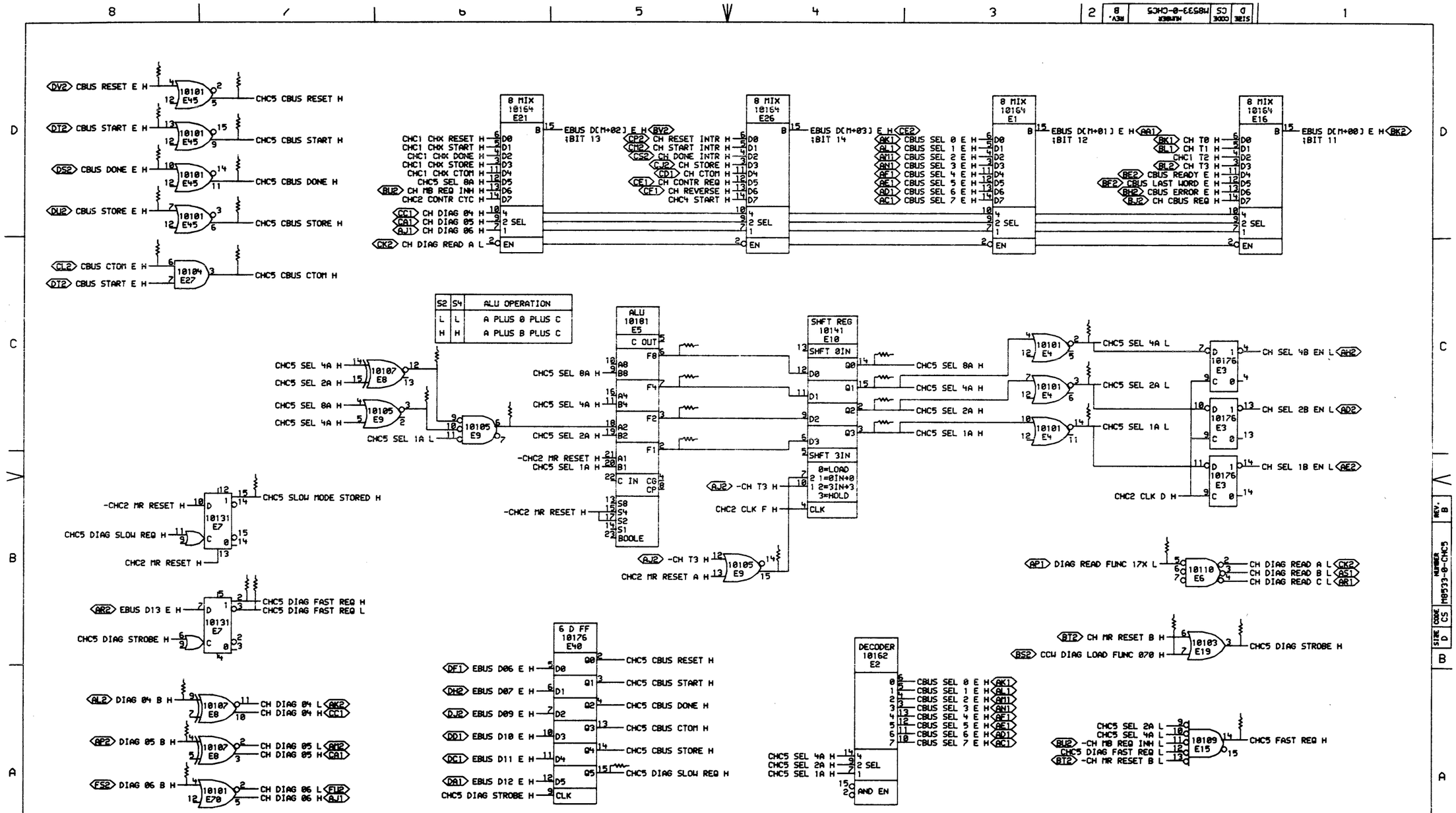

"THIS DRAWING AND SPECIFICATIONS, HEREIN, ARE THE PROPERTY OF DIGITAL EQUIPMENT CORPORATION AND SHALL NOT BE REPRODUCED OR COPIED OR USED IN WHOLE OR IN PART AS THE BASIS FOR THE MANUFACTURE OR SALE OF ITEMS WITHOUT WRITTEN PERMISSION. COPYRIGHT © 1977, DIGITAL EQUIPMENT CORPORATION"

REVISIONS		
CHK	CHANGE NO.	REV
G.W.	M8533-00002	E
M.SCHWARTZ		

digital

DRN	DATE 06-JAN-77	ENG.	DATE
CHC5EF.DRW[4,570]	06-JAN-77 10:32	BOARD LOCATION: 4F09 SHEET 1 OF 1	
FIRST USED ON OPTION/MODEL:		NEXT HIGHER ASSEMBLY: B-DD-M8533-0	

TITLE: CHANNEL CONTROL

SIZE	CODE	NUMBER	REV.
D	CS	M8533-0-CHC5	B

MR

226

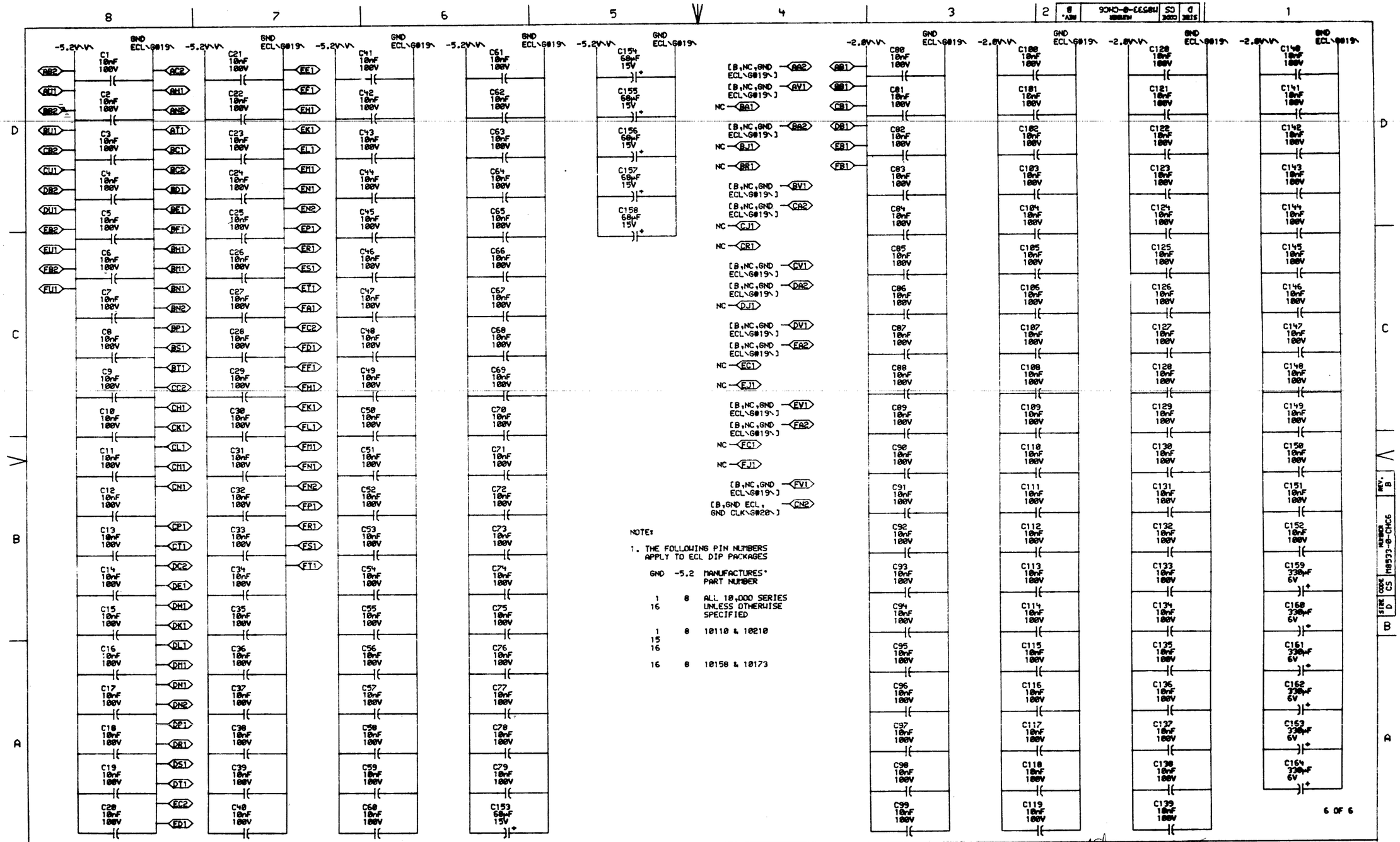

NOTE:

1. THE FOLLOWING PIN NUMBERS APPLY TO ECL DIP PACKAGES

GND	-5.2	MANUFACTURES' PART NUMBER
1	8	ALL 10,000 SERIES UNLESS OTHERWISE SPECIFIED
16		
1	8	10110 & 10210
15		
16		
16	8	10158 & 10173

"THIS DRAWING AND SPECIFICATIONS, HEREIN, ARE THE PROPERTY OF DIGITAL EQUIPMENT CORPORATION AND SHALL NOT BE REPRODUCED OR COPIED OR USED IN WHOLE OR IN PART AS THE BASIS FOR THE MANUFACTURE OR SALE OF ITEMS WITHOUT WRITTEN PERMISSION. COPYRIGHT © 1977, DIGITAL EQUIPMENT CORPORATION"

REVISIONS

CHK	CHANGE NO.	REV
	M8533-0000-2	B

digital

DRAWN: CHCGEF,DRW4,578 05-JAN-77 14:28

DATE 05-JAN-77 | ENG. | DATE

DATE | BOARD LOCATION: 4AE05 | SHEET 1 OF 1

NEXT HIGHER ASSEMBLY: B-DD-M8533-0

FIRST USED ON OPTION/MODEL: KL10

TITLE: CHANNEL CONTROL POWER AND GROUND

SIZE	CODE	NUMBER	REV.
D	CS	M8533-0-CHC6	B

227

RESISTOR LOC(PIN)	SHOWN ON DRW#	REF	VALUE	TERMINATES SIGNAL
R248(1)	CHC4	B2	100Ω	%DL1(2)
R13(1)	CHC4	A2	100Ω	%DL2(2)
R219(1)	CHC1	C2	68Ω	%E11(14)
R155(1)	CHC1	B6	68Ω	%E11(9)
R112(1)	CHC1	B5	68Ω	%E12(3)
R116(1)	CHC1	B4	68Ω	%E13(11)
R113(1)	CHC1	C4	68Ω	%E13(5)
R114(1)	CHC1	C4	68Ω	%E13(6)
R115(1)	CHC1	B4	68Ω	%E13(9)
R59(1)	CHC1	B2	68Ω	%E14(3)
R60(1)	CHC1	C4	68Ω	%E17(13)
R157(1)	CHC1	A2	68Ω	%E19(14)
R55(1)	CHC1	C2	68Ω	%E23(3)
R159(1)	CHC1	C4	68Ω	%E27(14)
R160(1)	CHC1	D4	68Ω	%E27(2)
R130(1)	CHC4	A7	68Ω	%E28(3)
R103(1)	CHC4	A3	100Ω	%E3(15)
R108(1)	CHC4	B3	100Ω	%E3(3)
R107(1)	CHC1	B7	68Ω	%E31(14)
R230(1)	CHC1	A4	68Ω	%E35(13)
R14(1)	CHC1	A4	68Ω	%E35(14)
R232(1)	CHC1	B4	68Ω	%E35(2)
R231(1)	CHC1	A4	68Ω	%E35(3)
R229(1)	CHC1	A4	68Ω	%E35(4)
R178(1)	CHC1	D7	68Ω	%E36(1)
R184(1)	CHC1	D7	68Ω	%E36(15)
R183(1)	CHC1	D7	68Ω	%E36(2)
R54(1)	CHC1	D5	68Ω	%E37(14)
R171(1)	CHC1	D5	68Ω	%E37(15)
R168(1)	CHC1	D5	68Ω	%E37(2)
R158(1)	CHC1	D5	68Ω	%E37(3)
R156(1)	CHC1	D4	68Ω	%E4(15)
R126(1)	CHC1	D6	68Ω	%E41(1)
R123(1)	CHC1	D6	68Ω	%E41(14)
R125(1)	CHC1	D6	68Ω	%E41(15)
R124(1)	CHC1	D6	68Ω	%E41(2)
R12(1)	CHC3	B4	68Ω	%E44(15)
R7(1)	CHC5	C5	68Ω	%E5(2)
R3(1)	CHC5	C5	68Ω	%E5(3)
R2(1)	CHC5	C5	68Ω	%E5(6)

RESISTOR LOC(PIN)	SHOWN ON DRW#	REF	VALUE	TERMINATES SIGNAL
R1(1)	CHC5	C5	68Ω	%E5(7)
R64(1)	CHC2	B2	68Ω	%E63(15)
R247(1)	CHC4	B5	68Ω	%E65(15)
R63(1)	CHC2	B3	68Ω	%E66(15)
R163(1)	CHC2	D5	68Ω	%E75(14)
R258(1)	CHC2	D5	68Ω	%E75(15)
R255(1)	CHC2	D5	68Ω	%E75(2)
R259(1)	CHC2	C5	68Ω	%E75(3)
R56(1)	CHC5	C6	68Ω	%E8(12)
R8(1)	CHC5	B4	68Ω	%E9(15)
R57(1)	CHC5	C6	68Ω	%E9(3)
R4(1)	CHC5	C6	68Ω	%E9(6)
R169(1)	CHC5	C8	68Ω	CBUS CTOM E H
R241(1)	CHC5	D8	68Ω	CBUS DONE E H
R235(1)	CHC1	A5	68Ω	CBUS REQUEST E H
R244(1)	CHC5	D8	68Ω	CBUS RESET E H
R170(1)	CHC5	D8	68Ω	CBUS START E H
R245(1)	CHC5	D8	68Ω	CBUS STORE E H
R102(1)	CHC4	B3	68Ω	-CCL CH BUF WR EN H
R165(1)	CHC2	D5	68Ω	-CCL MB RIP H
R61(1)	CHC5	B2	68Ω	CCW DIAG LOAD FUNC 070 H
R223(1)	CHC1	A4	68Ω	CHC1 CHX CTOM H
R23(1)	CHC1	A4	68Ω	-CHC1 CHX CTOM H
R227(1)	CHC1	A4	68Ω	CHC1 CHX DONE H
R39(1)	CHC1	A4	68Ω	-CHC1 CHX DONE H
R225(1)	CHC1	A4	68Ω	CHC1 CHX RESET H
R98(1)	CHC1	A4	68Ω	-CHC1 CHX RESET H
R226(1)	CHC1	B4	68Ω	CHC1 CHX START H
R136(1)	CHC1	B4	68Ω	-CHC1 CHX START H
R224(1)	CHC1	A4	68Ω	CHC1 CHX STORE H
R30(1)	CHC1	A4	68Ω	-CHC1 CHX STORE H
R215(1)	CHC1	C7	68Ω	CHC1 CLK SYN H
R120(1)	CHC1	B7	68Ω	CHC1 EBUS CLK DLY H
R257(1)	CHC1	C7	68Ω	CHC1 RAM ADR 1 H
R253(1)	CHC1	B7	68Ω	CHC1 RAM ADR 2 H
R29(1)	CHC1	B7	68Ω	CHC1 RAM ADR 4 H
R62(1)	CHC1	A4	68Ω	CHC1 REQ C H
R233(1)	CHC1	C5	68Ω	CHC1 T0 A H
R111(1)	CHC1	B5	68Ω	CHC1 T1 A H
R221(1)	CHC1	B4	68Ω	CHC1 T2 H

RESISTOR LOC(PIN)	SHOWN ON DRW#	REF	VALUE	TERMINATES SIGNAL
R172(1)	CHC1	B5	68Ω	CHC1 T2 A H
R270(1)	CHC1	B4	68Ω	-CHC1 T3 B H
R216(1)	CHC1	B2	68Ω	CHC1 TIMING BLOCK H
R263(1)	CHC2	D7	68Ω	CHC2 CH0 CONTR REQ H
R189(1)	CHC2	D1	68Ω	CHC2 CH0 STORE H
R122(1)	CHC2	C4	68Ω	CHC2 CH0 STORE IN H
R266(1)	CHC2	D7	68Ω	CHC2 CH1 CONTR REQ H
R190(1)	CHC2	D1	68Ω	CHC2 CH1 STORE H
R127(1)	CHC2	C4	68Ω	CHC2 CH1 STORE IN H
R261(1)	CHC2	D7	68Ω	CHC2 CH2 CONTR REQ H
R191(1)	CHC2	D1	68Ω	CHC2 CH2 STORE H
R128(1)	CHC2	C4	68Ω	CHC2 CH2 STORE IN H
R265(1)	CHC2	C7	68Ω	CHC2 CH3 CONTR REQ H
R188(1)	CHC2	D1	68Ω	CHC2 CH3 STORE H
R129(1)	CHC2	C4	68Ω	CHC2 CH3 STORE IN H
R262(1)	CHC2	C7	68Ω	CHC2 CH4 CONTR REQ H
R185(1)	CHC2	C1	68Ω	CHC2 CH4 STORE H
R77(1)	CHC2	C4	68Ω	CHC2 CH4 STORE IN H
R260(1)	CHC2	C7	68Ω	CHC2 CH5 CONTR REQ H
R180(1)	CHC2	C1	68Ω	CHC2 CH5 STORE H
R83(1)	CHC2	C4	68Ω	CHC2 CH5 STORE IN H
R264(1)	CHC2	C7	68Ω	CHC2 CH6 CONTR REQ H
R187(1)	CHC2	C1	68Ω	CHC2 CH6 STORE H
R81(1)	CHC2	C4	68Ω	CHC2 CH6 STORE IN H
R267(1)	CHC2	B7	68Ω	CHC2 CH7 CONTR REQ H
R186(1)	CHC2	C1	68Ω	CHC2 CH7 STORE H
R84(1)	CHC2	C4	68Ω	CHC2 CH7 STORE IN H
R51(1)	CHC2	B3	68Ω	CHC2 CLK A H
R82(1)	CHC2	B3	68Ω	CHC2 CLK B H
R150(1)	CHC2	B3	68Ω	CHC2 CLK C H
R106(1)	CHC2	B3	68Ω	CHC2 CLK D H
R68(1)	CHC2	B3	68Ω	CHC2 CLK E H
R10(1)	CHC2	B3	68Ω	CHC2 CLK F H
R132(1)	CHC2	C5	68Ω	CHC2 CONTR 1 H
R131(1)	CHC2	D5	68Ω	CHC2 CONTR 2 H
R133(1)	CHC2	D5	68Ω	CHC2 CONTR 4 H
R119(1)	CHC2	A7	68Ω	CHC2 CONTR CYC H
R65(1)	CHC2	B1	68Ω	-CHC2 DONE INTR ENA H
R162(1)	CHC2	A6	68Ω	CHC2 DONE INTR IN H
R200(1)	CHC2	B7	68Ω	CHC2 MR RESET H

RESISTOR LOC(PIN)	SHOWN ON DRW#	REF	VALUE	TERMINATES SIGNAL
R154(1)	CHC2	B7	68Ω	-CHC2 MR RESET H
R149(1)	CHC2	B7	68Ω	CHC2 MR RESET A H
R167(1)	CHC2	A4	68Ω	CHC2 RESET INTR IN H
R101(1)	CHC2	A7	68Ω	CHC2 SEL 1E H
R100(1)	CHC2	A7	68Ω	CHC2 SEL 2E H
R97(1)	CHC2	A7	68Ω	CHC2 SEL 4E H
R66(1)	CHC2	B2	68Ω	CHC2 START INTR ENA H
R118(1)	CHC2	B2	68Ω	-CHC2 START INTR ENA H
R166(1)	CHC2	A6	68Ω	CHC2 START INTR IN H
R161(1)	CHC2	C5	68Ω	CHC2 STORE ENA H
R28(1)	CHC3	D5	68Ω	CHC3 CH0 CTOM H
R20(1)	CHC3	B5	68Ω	CHC3 CH0 CTOM HOLD H
R11(1)	CHC3	B7	68Ω	CHC3 CH0 CTOM IN H
R210(1)	CHC3	C5	68Ω	CHC3 CH0 DONE INTR H
R35(1)	CHC3	B2	68Ω	CHC3 CH0 DONE INTR IN H
R33(1)	CHC3	D2	68Ω	CHC3 CH1 CTOM H
R76(1)	CHC3	B5	68Ω	CHC3 CH1 CTOM HOLD H
R69(1)	CHC3	B7	68Ω	CHC3 CH1 CTOM IN H
R213(1)	CHC3	C5	68Ω	CHC3 CH1 DONE INTR H
R36(1)	CHC3	B2	68Ω	CHC3 CH1 DONE INTR IN H
R32(1)	CHC3	D5	68Ω	CHC3 CH2 CTOM H
R21(1)	CHC3	B5	68Ω	CHC3 CH2 CTOM HOLD H
R16(1)	CHC3	B7	68Ω	CHC3 CH2 CTOM IN H
R211(1)	CHC3	C5	68Ω	CHC3 CH2 DONE INTR H
R34(1)	CHC3	A2	68Ω	CHC3 CH2 DONE INTR IN H
R31(1)	CHC3	D2	68Ω	CHC3 CH3 CTOM H
R75(1)	CHC3	A5	68Ω	CHC3 CH3 CTOM HOLD H
R71(1)	CHC3	A7	68Ω	CHC3 CH3 CTOM IN H
R212(1)	CHC3	C5	68Ω	CHC3 CH3 DONE INTR H
R37(1)	CHC3	A2	68Ω	CHC3 CH3 DONE INTR IN H
R27(1)	CHC3	D5	68Ω	CHC3 CH4 CTOM H
R17(1)	CHC3	A5	68Ω	CHC3 CH4 CTOM HOLD H
R15(1)	CHC3	A7	68Ω	CHC3 CH4 CTOM IN H
R88(1)	CHC3	C2	68Ω	CHC3 CH4 DONE INTR H
R38(1)	CHC3	A2	68Ω	CHC3 CH4 DONE INTR IN H
R24(1)	CHC3	D2	68Ω	CHC3 CH5 CTOM H
R72(1)	CHC3	A5	68Ω	CHC3 CH5 CTOM HOLD H
R70(1)	CHC3	A7	68Ω	CHC3 CH5 CTOM IN H
R91(1)	CHC3	C2	68Ω	CHC3 CH5 DONE INTR H
R41(1)	CHC3	A2	68Ω	CHC3 CH5 DONE INTR IN H

NOTE:

1. ALL TERMINATORS HAVE PIN TWO CONNECTED TO -2.0V AND ARE 5% 1/4WATT UNLESS OTHERWISE SPECIFIED
2. ENTRIES ARE SORTED BY SIGNAL NAME
3. % INDICATES OUTPUT OF DIP LOC AND
   () INDICATES PIN NUMBER

WAINGS AND SPECIFICATIONS, HEREIN, ARE THE
F DIGITAL EQUIPMENT CORPORATION AND SHALL
RODUCED OR COPIED OR USED IN WHOLE OR IN
THE BASIS FOR THE MANUFACTURE OR SALE OF
IT WRITTEN PERMISSION.
1977, DIGITAL EQUIPMENT CORPORA "ON"

REVISIONS		
CHK	CHANGE NO.	REV
GM		E

digital

DRN. C Smith DATE 11-JAN-77 ENG. DATE 11/7/77
DATE BOARD LOCATION:
SHEET 1 OF 2
F85331.DRW(4,570) 17-JAN-77 14:04 NEXT HIGHER ASSEMBLY: B-DD-M8533-0
FIRST USED ON OPTION/MODEL: KL10

TITLE: CHANNEL CONTROL TERMINATORS

SIZE	CODE	NUMBER	REV.
D	CS	M8533-0-RES	B

MR 1

328

RESISTOR LOC(PIN)	SHOWN ON DRW#	REF	VALUE	TERMINATES SIGNAL
R25(1)	CHC3	D5	68Ω	CHC3 CH6 CTOM H
R18(1)	CHC3	A5	68Ω	CHC3 CH6 CTOM HOLD H
R19(1)	CHC3	A7	68Ω	CHC3 CH6 CTOM IN H
R140(1)	CHC3	C2	68Ω	CHC3 CH6 DONE INTR H
R40(1)	CHC3	A2	68Ω	CHC3 CH6 DONE INTR IN H
R26(1)	CHC3	D2	68Ω	CHC3 CH7 CTOM H
R73(1)	CHC3	A5	68Ω	CHC3 CH7 CTOM HOLD H
R74(1)	CHC3	A7	68Ω	CHC3 CH7 CTOM IN H
R137(1)	CHC3	C2	68Ω	CHC3 CH7 DONE INTR H
R44(1)	CHC3	A2	68Ω	CHC3 CH7 DONE INTR IN H
R48(1)	CHC4	D4	68Ω	CHC4 CH0 RESET INTR H
R146(1)	CHC4	C7	68Ω	CHC4 CH0 RESET INTR HOLD H
R144(1)	CHC4	D7	68Ω	CHC4 CH0 RESET INTR IN H
R209(1)	CHC4	C4	68Ω	CHC4 CH0 START INTR H
R79(1)	CHC4	A7	68Ω	CHC4 CH0 START INTR HOLD H
R192(1)	CHC4	B7	68Ω	CHC4 CH0 START INTR IN H
R47(1)	CHC4	D4	68Ω	CHC4 CH1 RESET INTR H
R143(1)	CHC4	C7	68Ω	CHC4 CH1 RESET INTR HOLD H
R145(1)	CHC4	D7	68Ω	CHC4 CH1 RESET INTR IN H
R214(1)	CHC4	C4	68Ω	CHC4 CH1 START INTR H
R80(1)	CHC4	A7	68Ω	CHC4 CH1 START INTR HOLD H
R193(1)	CHC4	B7	68Ω	CHC4 CH1 START INTR IN H
R46(1)	CHC4	D4	68Ω	CHC4 CH2 RESET INTR H
R138(1)	CHC4	C7	68Ω	CHC4 CH2 RESET INTR HOLD H
R147(1)	CHC4	D7	68Ω	CHC4 CH2 RESET INTR IN H
R256(1)	CHC4	C4	68Ω	CHC4 CH2 START INTR H
R78(1)	CHC4	A7	68Ω	CHC4 CH2 START INTR HOLD H
R195(1)	CHC4	B7	68Ω	CHC4 CH2 START INTR IN H
R45(1)	CHC4	D4	68Ω	CHC4 CH3 RESET INTR H
R142(1)	CHC4	C7	68Ω	CHC4 CH3 RESET INTR HOLD H
R148(1)	CHC4	D7	68Ω	CHC4 CH3 RESET INTR IN H
R208(1)	CHC4	C4	68Ω	CHC4 CH3 START INTR H
R194(1)	CHC4	A7	68Ω	CHC4 CH3 START INTR HOLD H
R198(1)	CHC4	B7	68Ω	CHC4 CH3 START INTR IN H
R99(1)	CHC4	D1	68Ω	CHC4 CH4 RESET INTR H
R94(1)	CHC4	C7	68Ω	CHC4 CH4 RESET INTR HOLD H
R49(1)	CHC4	D7	68Ω	CHC4 CH4 RESET INTR IN H
R42(1)	CHC4	C1	68Ω	CHC4 CH4 START INTR H
R89(1)	CHC4	A7	68Ω	CHC4 CH4 START INTR HOLD H
R196(1)	CHC4	B7	68Ω	CHC4 CH4 START INTR IN H

RESISTOR LOC(PIN)	SHOWN ON DRW#	REF	VALUE	TERMINATES SIGNAL
R95(1)	CHC4	D1	68Ω	CHC4 CH5 RESET INTR H
R96(1)	CHC4	C7	68Ω	CHC4 CH5 RESET INTR HOLD H
R50(1)	CHC4	D7	68Ω	CHC4 CH5 RESET INTR IN H
R43(1)	CHC4	C1	68Ω	CHC4 CH5 START INTR H
R90(1)	CHC4	A7	68Ω	CHC4 CH5 START INTR HOLD H
R197(1)	CHC4	B7	68Ω	CHC4 CH5 START INTR IN H
R139(1)	CHC4	D1	68Ω	CHC4 CH6 RESET INTR H
R93(1)	CHC4	C7	68Ω	CHC4 CH6 RESET INTR HOLD H
R53(1)	CHC4	D7	68Ω	CHC4 CH6 RESET INTR IN H
R134(1)	CHC4	C1	68Ω	CHC4 CH6 START INTR H
R85(1)	CHC4	A7	68Ω	CHC4 CH6 START INTR HOLD H
R199(1)	CHC4	B7	68Ω	CHC4 CH6 START INTR IN H
R141(1)	CHC4	C1	68Ω	CHC4 CH7 RESET INTR H
R92(1)	CHC4	C7	68Ω	CHC4 CH7 RESET INTR HOLD H
R52(1)	CHC4	D7	68Ω	CHC4 CH7 RESET INTR IN H
R135(1)	CHC4	B1	68Ω	CHC4 CH7 START INTR H
R86(1)	CHC4	A7	68Ω	CHC4 CH7 START INTR HOLD H
R201(1)	CHC4	B7	68Ω	CHC4 CH7 START INTR IN H
R228(1)	CHC4	B4	68Ω	CHC4 START H
R238(1)	CHC5	C7	68Ω	CHC5 CBUS CTOM H
R234(1)	CHC5	D7	68Ω	CHC5 CBUS DONE H
R236(1)	CHC5	D7	68Ω	CHC5 CBUS RESET H
R237(1)	CHC5	D7	68Ω	CHC5 CBUS START H
R239(1)	CHC5	D7	68Ω	CHC5 CBUS STORE H
R220(1)	CHC5	B7	68Ω	CHC5 DIAG FAST REQ H
R5(1)	CHC5	B7	68Ω	-CHC5 DIAG FAST REQ H
R6(1)	CHC5	A5	68Ω	CHC5 DIAG SLOW REQ H
R240(1)	CHC5	B2	68Ω	CHC5 DIAG STROBE H
R58(1)	CHC5	A2	68Ω	CHC5 FAST REQ H
R153(1)	CHC5	C4	68Ω	CHC5 SEL 1A H
R104(1)	CHC5	C2	68Ω	-CHC5 SEL 1A H
R152(1)	CHC5	C4	68Ω	CHC5 SEL 2A H
R105(1)	CHC5	C2	68Ω	-CHC5 SEL 2A H
R151(1)	CHC5	C4	68Ω	CHC5 SEL 4A H
R9(1)	CHC5	C2	68Ω	-CHC5 SEL 4A H
R222(1)	CHC5	C4	68Ω	CHC5 SEL 8A H
R218(1)	CHC5	B7	68Ω	CHC5 SLOW MODE STORED H
R121(1)	CHC2	B3	68Ω	CLK1 CHC H
R269(1)	CHC1	A7	68Ω	CRC BUF MB SEL H
R249(1)	CHC2	A8	68Ω	-CRC CBUS CONTR CYC H

RESISTOR LOC(PIN)	SHOWN ON DRW#	REF	VALUE	TERMINATES SIGNAL
R179(1)	CHC1	D6	68Ω	CRC ERR IN H
R181(1)	CHC1	D6	68Ω	CRC LAST WORD IN H
R242(1)	CHC1	C7	68Ω	-CRC RAM ADR 1R H
R243(1)	CHC1	B7	68Ω	-CRC RAM ADR 2R H
R246(1)	CHC1	B7	68Ω	-CRC RAM ADR 4R H
R182(1)	CHC1	D6	68Ω	CRC READY IN H
R174(1)	CHC1	D6	68Ω	CRC REVERSE IN H
R173(1)	CHC1	C7	68Ω	CRC SEL 1C H
R251(1)	CHC2	A8	68Ω	-CRC SEL 1E H
R176(1)	CHC1	D7	68Ω	CRC SEL 2C H
R250(1)	CHC2	A8	68Ω	-CRC SEL 2E H
R177(1)	CHC1	D7	68Ω	CRC SEL 4C H
R252(1)	CHC2	A8	68Ω	-CRC SEL 4E H
R175(1)	CHC1	C6	68Ω	-CRC WR RAM H
R109(1)	CHC5	A8	68Ω	DIAG 04 B H
R110(1)	CHC5	A8	68Ω	DIAG 05 B H
R254(1)	CHC5	A8	68Ω	DIAG 06 B H
R217(1)	CHC5	B2	68Ω	-DIAG READ FUNC 17X H
R205(1)	CHC1	A7	68Ω	MB IN SEL 1 H
R207(1)	CHC1	A7	68Ω	MB IN SEL 2 H
R206(1)	CHC1	A7	68Ω	MB IN SEL 4 H
R204(1)	CHC1	A7	68Ω	MB SEL 1 EN H
R203(1)	CHC1	A7	68Ω	MB SEL 2 EN H
R268(1)	CHC1	A7	68Ω	MB SEL HOLD H
R117(1)	CHC1	C7	68Ω	-MBC3 A PHASE COMING H
R67(1)	CHC2	B8	68Ω	MR RESET 05 H
R202(1)	CHC1	A7	68Ω	-NXM ANY H

NOTE:

1. ALL TERMINATORS HAVE PIN TWO CONNECTED TO -2.0V AND ARE 5% 1/4WATT UNLESS OTHERWISE SPECIFIED
2. ENTRIES ARE SORTED BY SIGNAL NAME
3. % INDICATES OUTPUT OF DIP LOC AND
   () INDICATES PIN NUMBER

"THIS DRAWING AND SPECIFICATIONS, HEREIN, ARE THE PROPERTY OF DIGITAL EQUIPMENT CORPORATION AND SHALL NOT BE REPRODUCED OR COPIED OR USED IN WHOLE OR IN PART AS THE BASIS FOR THE MANUFACTURE OR SALE OF ITEMS WITHOUT WRITTEN PERMISSION.
COPYRIGHT © 1977, DIGITAL EQUIPMENT CORPORATION"

REVISIONS		
CHK	CHANGE NO.	REV

digital

DRN. C. Smith DATE 11-JAN-77 ENG. DATE
DATE
F85332.DRW[4,570] 11-JAN-77 14:11 BOARD LOCATION: SHEET 2 OF 2
NEXT HIGHER ASSEMBLY: B-DD-M8533-0
FIRST USED ON OPTION/MODEL: KL10

TITLE: CHANNEL CONTROL TERMINATORS

SIZE	CODE	NUMBER	REV.
D	CS	M8533-0-RES	B

229

REVISION CONTROL SHEET

CUSTOMER PRINT SET	MFG SET	DRAWING NO	NO OF SHT	DESCRIPTION	OPTION NO/FILE DATE	REVISIONS						
			-	MODULE REVISION		A	B	C	C		C	
		D-UA-M8534-Ø-Ø	5	CHANNEL CONTROL WORD		-	A	B	BI		BI	
		D-CS-M8534-Ø-CCW1	1	CHANNEL CONTROL WORD		-	A	B	B		B	
		D-CS-M8534-Ø-CCW2	1	CHANNEL CONTROL WORD		-	A	B	C		C	
		D-CS-M8534-Ø-CCW3	1	CHANNEL CONTROL WORD		-	A	B			B	
		D-CS-M8534-Ø-CCW4	1	CHANNEL CONTROL WORD		-	A	A			A	
		D-CS-M8534-Ø-CCW5	1	CHANNEL CONTROL WORD		-	A	B	C		C	
		D-CS-M8534-Ø-CCW6	1	CHANNEL CONTROL WORD		-	A	A	B		B	
		D-CS-M8534-Ø-CCW7	1	CHANNEL CONTROL WORD		-	A	B	C		C	
		D-CS-M8534-Ø-RES	2	CHAN CONTROL WORD TERMINATORS		-	A	B	C		C	
		K-CO-M8534-Ø-4	1	CHANNEL CONTROL WORD (CALDEC DATA BASE)		B	B	B	B	SEE SHT. 3	B	
		D-AH-M8534-Ø-5	4	CHANNEL CONTROL WORD		A	A	A	A		A	
		B-MH-M8534-Ø-6	1	MODULE ECO HISTORY		A	B	C	C		C	
		5010924	-	ETCH CIRCUIT BOARD		B	B	B	B	VERSION	B	
		P00-M8534-ØØ		PROCESS SHEET (REF ONLY)		-	-	-	-		-	
									REWORK VERSION	RELAYOUT		
					ECO NO	ORIG.	00001	00002	MR003		MR004	

CUSTOMER PRINT SET CODES
X = PRINT OF DOCUMENT INCLUDED IN PRINT SET
C = INCLUDES ALL PRINTS INDICATED ON DOCUMENT
S = CONFIDENTIAL AUTHORIZED SIGNATURE REQUIRED

TITLE	SHEET	SIZE	CODE	NUMBER	REV
CHANNEL CONTROL WORD	SHEET 2 OF 3	B	DD	M8534-Ø	D

MR

230

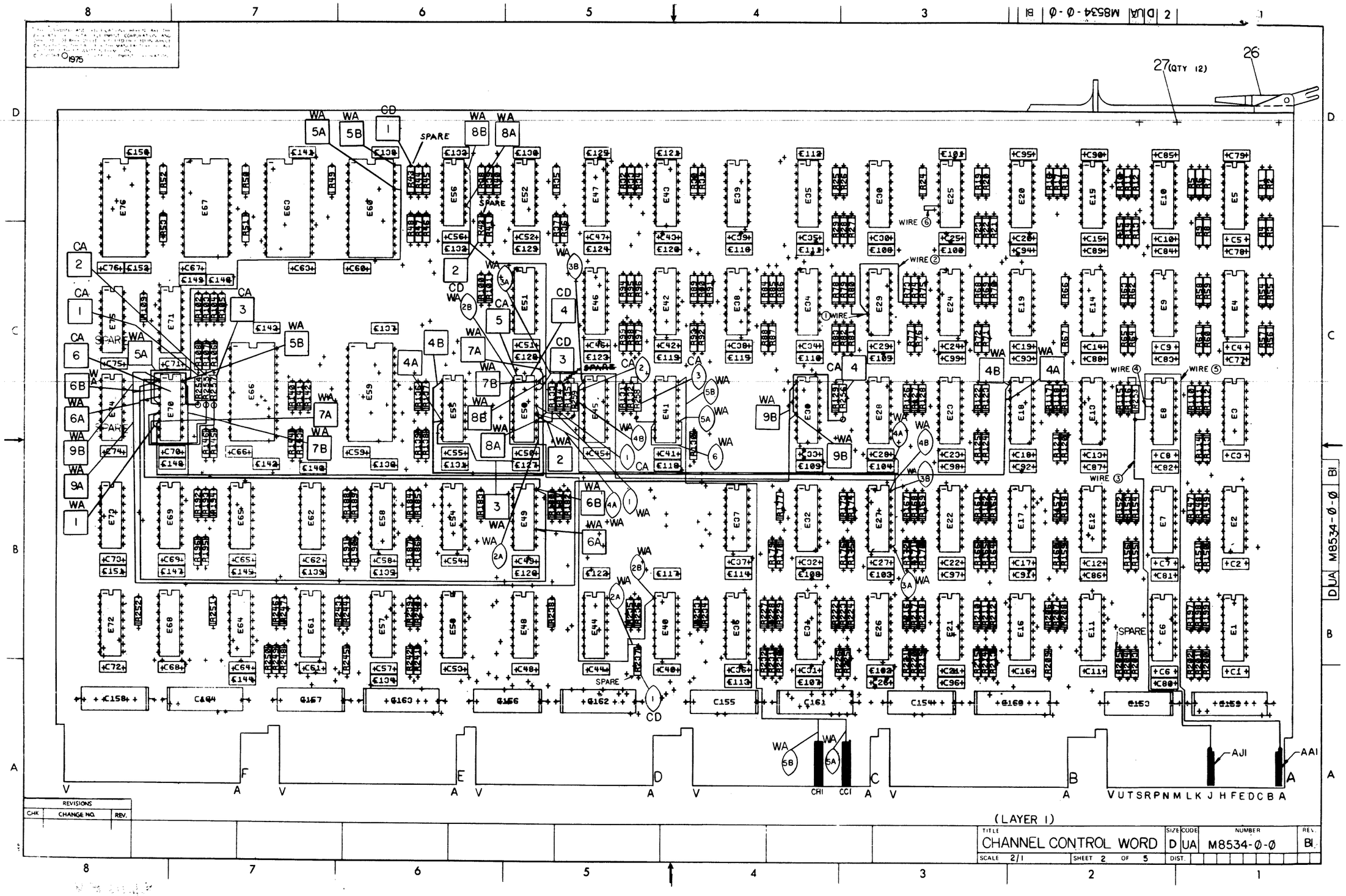
27 (QTY 12)
26
SPARE
WIRE ①
WIRE ②
WIRE ③
WIRE ④
WIRE ⑤
WIRE ⑥
AJI
AAI
CHI
CCI
(LAYER 1)
TITLE
CHANNEL CONTROL WORD
SIZE D
CODE UA
NUMBER M8534-Ø-Ø
REV. BI
SCALE 2/1
SHEET 2 OF 5
DIST.
REVISIONS
CHK
CHANGE NO.
REV.
D UA M8534-Ø-Ø BI

231

REVISION CONTROL SHEET

CUSTOMER PRINT SET	MFG SET	DRAWING NO	NO OF SHT	DESCRIPTION	OPTION NO/FILE DATE	REVISIONS NEW	LAYOUT VERSION
				MODULE REVISION		D	D
		D-UA-M8534-Ø-Ø	5	CHANNEL CONTROL WORD		C	C
		D-CS-M8534-Ø-CCW1	1	CHANNEL CONTROL WORD		B	B
		D-CS-M8534-Ø-CCW2	1	CHANNEL CONTROL WORD		C	C
		D-CS-M8534-Ø-CCW3	1	CHANNEL CONTROL WORD		B	B
		D-CS-M8534-Ø-CCW4	1	CHANNEL CONTROL WORD		A	A
		D-CS-M8534-Ø-CCW5	1	CHANNEL CONTROL WORD		C	C
		D-CS-M8534-Ø-CCW6	1	CHANNEL CONTROL WORD		B	B
		D-CS-M8534-Ø-CCW7	1	CHANNEL CONTROL WORD		C	C
		D-CS-M8534-Ø-RES	2	CHAN CONTROL WORD TERMINATORS		C	C
		K-CO-M8534-Ø-4	1	CHANNEL CONTROL WORD (CALDEC DATA BASE)		C	C
		D-MD-5010924-0-0	5	DRILL & ETCH DRAWINGS		B	C
		B-MH-M8534-Ø-6	1	MODULE ECO HISTORY		D	D
		5010924	-	ETCH CIRCUIT BOARD		C	C
		POO-M8534-ØØ		PROCESS SHEET (REF ONLY)		-	-

CUSTOMER PRINT SET CODES
X = PRINT OF DOCUMENT INCLUDED IN PRINT SET
C = INCLUDES ALL PRINTS INDICATED ON DOCUMENT
S = CONFIDENTIAL AUTHORIZED SIGNATURE REQUIRED

ECO NO		
	MR003	MR004

TITLE	SHEET	SIZE	CODE	NUMBER	REV
CHANNEL CONTROL WORD	3 OF 3	B	DD	M8534-Ø	D

MR

22

THIS DRAWING AND SPECIFICATIONS, HEREIN, ARE THE PROPERTY OF DIGITAL EQUIPMENT CORPORATION AND SHALL NOT BE REPRODUCED OR COPIED OR USED IN WHOLE OR IN PART AS THE BASIS FOR THE MANUFACTURE OR SALE OF ITEMS WITHOUT WRITTEN PERMISSION.
COPYRIGHT © 1977 DIGITAL EQUIPMENT CORPORATION

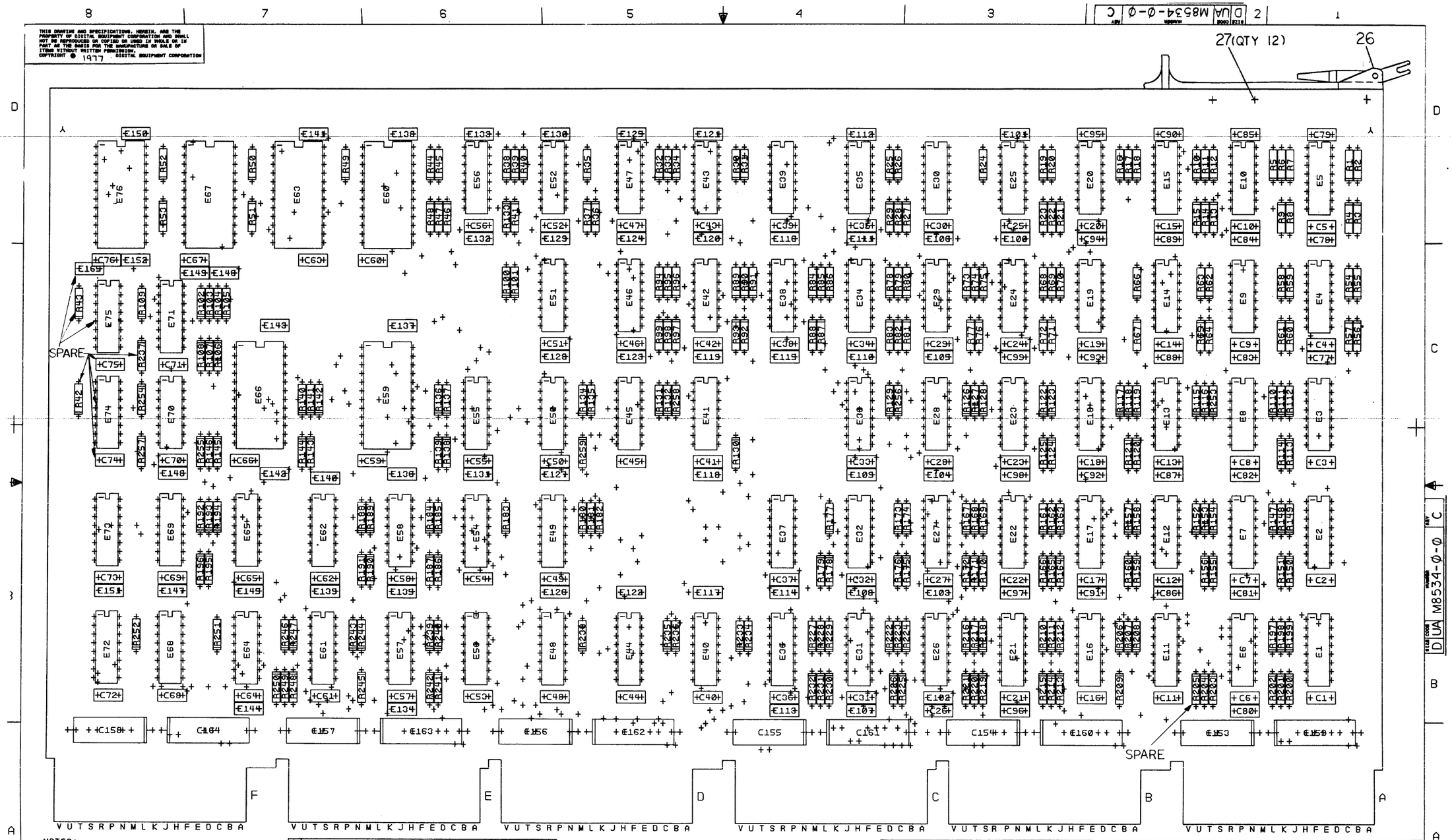

NOTES:

CHK	CHANGE NO	REV

ETCH REV.	C
P.C. DESIGN DATA BASE REV.	C

SIGNATURES	DATE
DRN. R. COUNTER	1-3-75
CHK'D. G. FLANDER	8-28-75
ENG. M. SCHWARTZ	8-28-75
PROJ. ENG. M. SCHWARTZ	8-28-75
PROD. D. RECZEK	8-28-75
SCALE 2/1	
SHT. 2 OF 5	

digital

TITLE
CHANNEL CONTROL WORD

SIZE	CODE	NUMBER	REV
D	UA	M8534-0-0	C

NEXT HIGHER ASSY. B-DD-M8534-0

MR 1 MS# 104479

233

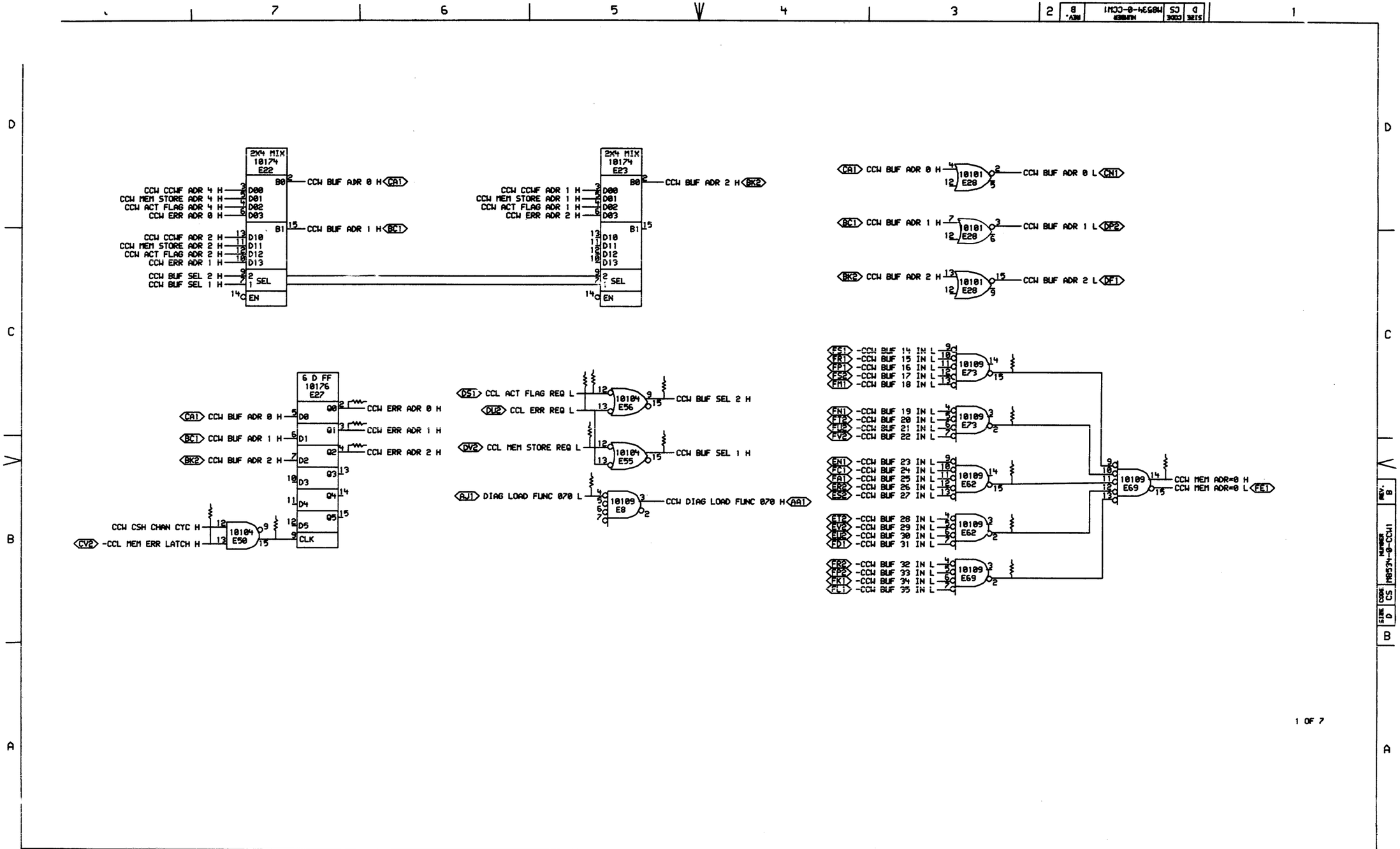

"THIS DRAWING AND SPECIFICATIONS, HEREIN, ARE THE PROPERTY OF DIGITAL EQUIPMENT CORPORATION AND SHALL NOT BE REPRODUCED OR COPIED OR USED IN WHOLE OR IN PART AS THE BASIS FOR THE MANUFACTURE OR SALE OF ITEMS WITHOUT WRITTEN PERMISSION.
COPYRIGHT © 1976, DIGITAL EQUIPMENT CORPORATION"

REVISIONS		
CHK	CHANGE NO.	REV
–	M8534-00002	B
	M.SCHWARTZ	

digital

DRN. J. Cooney DATE 03-FEB-76
CHK'D. C. Mathewson DATE 3/12/76
ENG. M. Schwartz DATE 2/19/76
CCWTEX.DRW[4,477] 30-JAN-76 14:57
BOARD LOCATION: 4AF12
SHEET 1 OF 1
FIRST USED ON OPTION/MODEL: KL10
NEXT HIGHER ASSEMBLY: B-DD-M8534-0

TITLE: CHANNEL CONTROL WORD

SIZE	CODE	NUMBER	REV.
D	CS	M8534-0-CCW1	B

MR

234

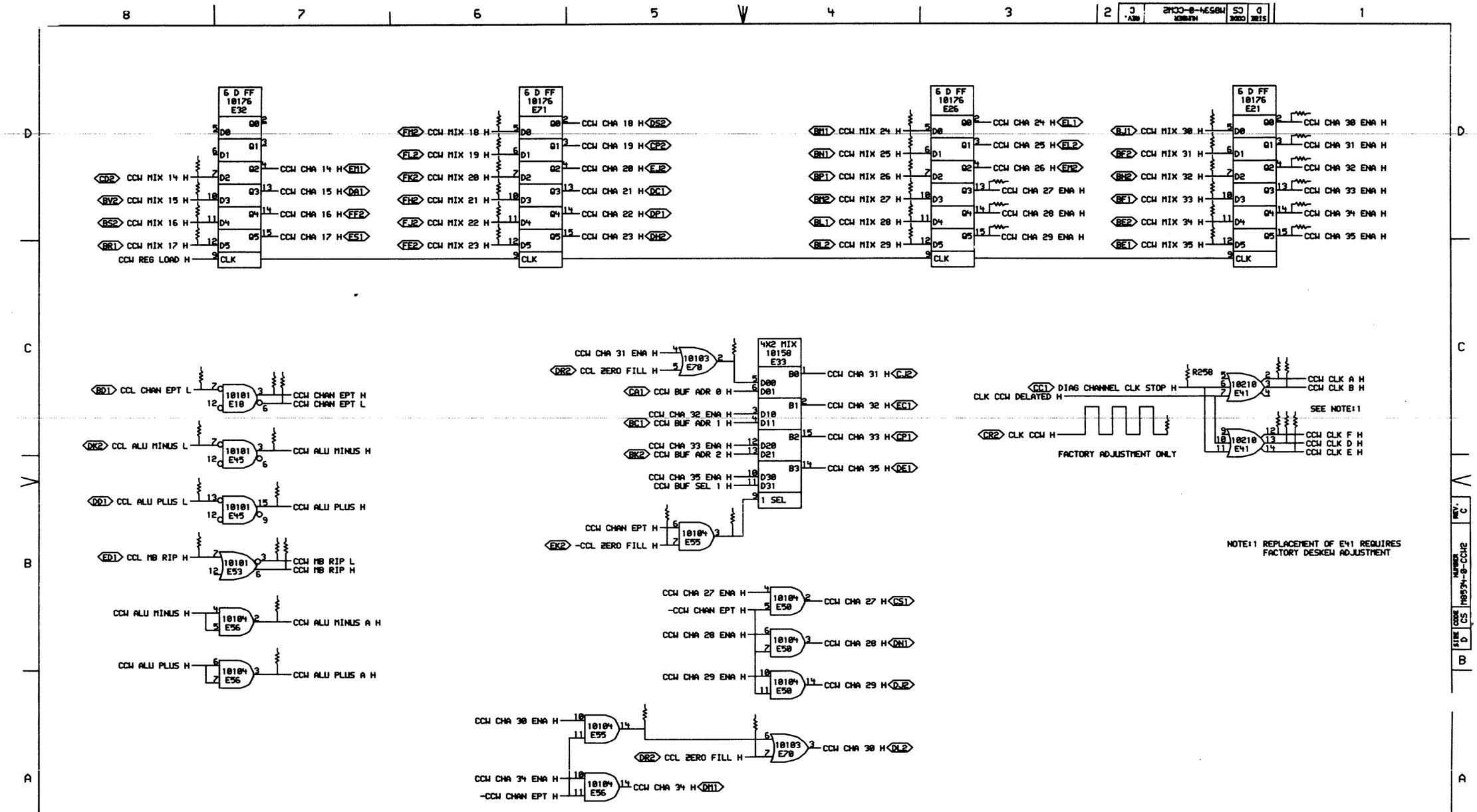

NOTE:1 REPLACEMENT OF E41 REQUIRES FACTORY DESKEW ADJUSTMENT

2 OF 7

"THIS DRAWING AND SPECIFICATIONS, HEREIN, ARE THE PROPERTY OF DIGITAL EQUIPMENT CORPORATION AND SHALL NOT BE REPRODUCED OR COPIED OR USED IN WHOLE OR IN PART AS THE BASIS FOR THE MANUFACTURE OR SALE OF ITEMS WITHOUT WRITTEN PERMISSION. COPYRIGHT © 1977, DIGITAL EQUIPMENT CORPORATION"

REVISIONS		
CHK	CHANGE NO.	REV
	M8534-M0003	C
	20-DEC-77	
	M. SCHWARTZ	

digital

DRN. | DATE 15-AUG-77 | ENG. | DATE
CHK'D | DATE | BOARD LOCATION: 4 OF 12
SHEET 1 OF 1
CC12EX.DRW[4,571] 20-JUL-77 11:38 NEXT HIGHER ASSEMBLY:
FIRST USED ON OPTION/MODEL: KL10 B-DD-M8534-0

TITLE: CHANNEL CONTROL WORD

SIZE	CODE	NUMBER	REV.
D	CS	M8534-0-CCW2	C

235

MF

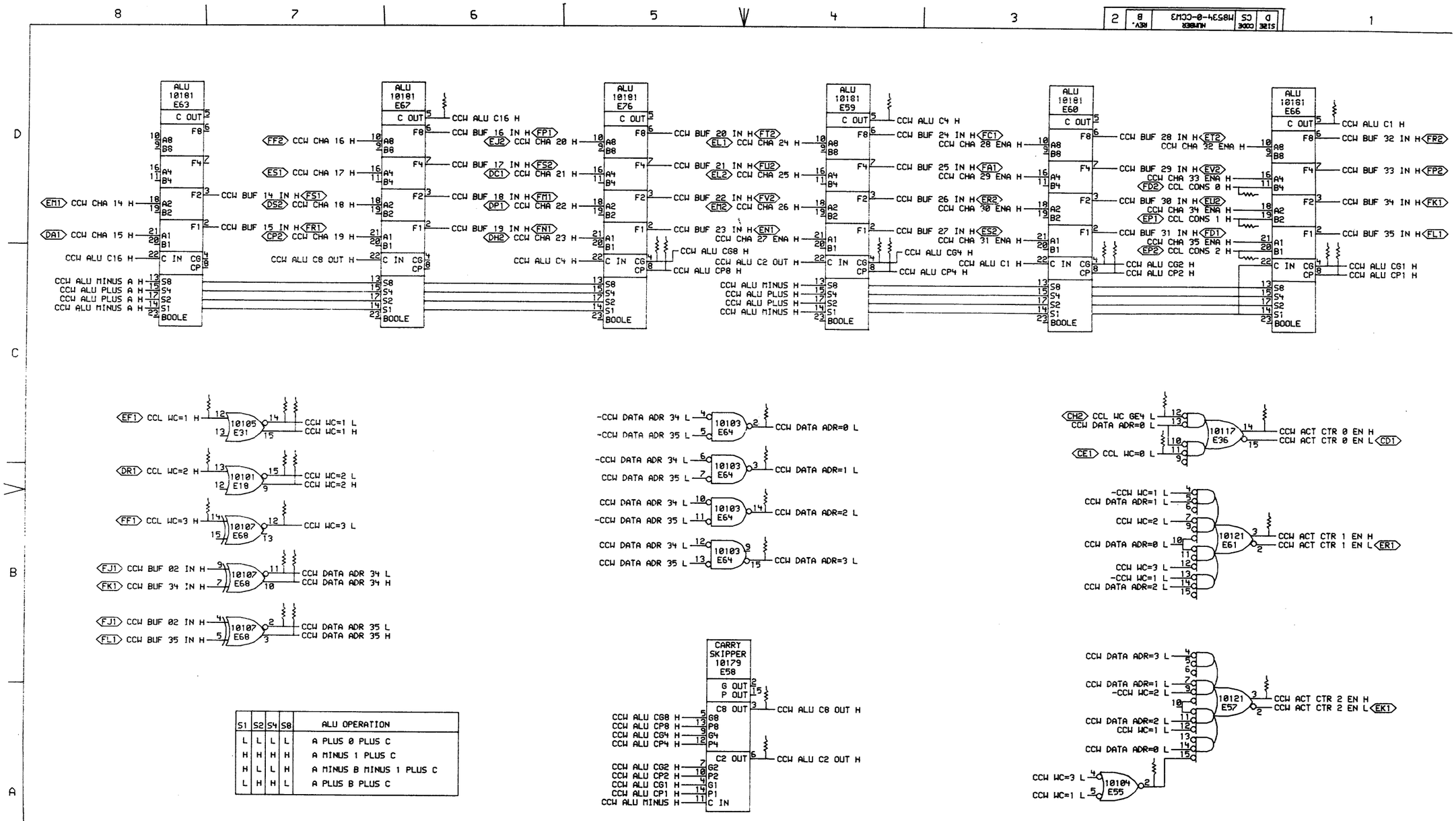

S1	S2	S4	S8	ALU OPERATION
L	L	L	L	A PLUS 0 PLUS C
H	H	H	H	A MINUS 1 PLUS C
H	L	L	H	A MINUS B MINUS 1 PLUS C
L	H	H	L	A PLUS B PLUS C

"THIS DRAWING AND SPECIFICATIONS, HEREIN, ARE THE PROPERTY OF DIGITAL EQUIPMENT CORPORATION AND SHALL NOT BE REPRODUCED OR COPIED OR USED IN WHOLE OR IN PART AS THE BASIS FOR THE MANUFACTURE OR SALE OF ITEMS WITHOUT WRITTEN PERMISSION. COPYRIGHT © 1976, DIGITAL EQUIPMENT CORPORATION"

REVISIONS		
CHK	CHANGE NO.	REV
—	M5534-[illegible]	B
	M5534-[illegible]	
	M5534-[illegible]	

digital

DRN: [illegible] DATE 14-FEB-76 ENG: [illegible] DATE [illegible]
CHK'D: [illegible] DATE 2/16/76 BOARD LOCATION: 4AF12 SHEET 1 OF 1
CCW3EX.DRW[4,4773] 02-FEB-76 15:34 NEXT HIGHER ASSEMBLY:
FIRST USED ON OPTION/MODEL: KL10 B-DD-M8534-0

TITLE: CHANNEL CONTROL WORD

SIZE	CODE	NUMBER	REV.
D	CS	M8534-0-CCW3	B

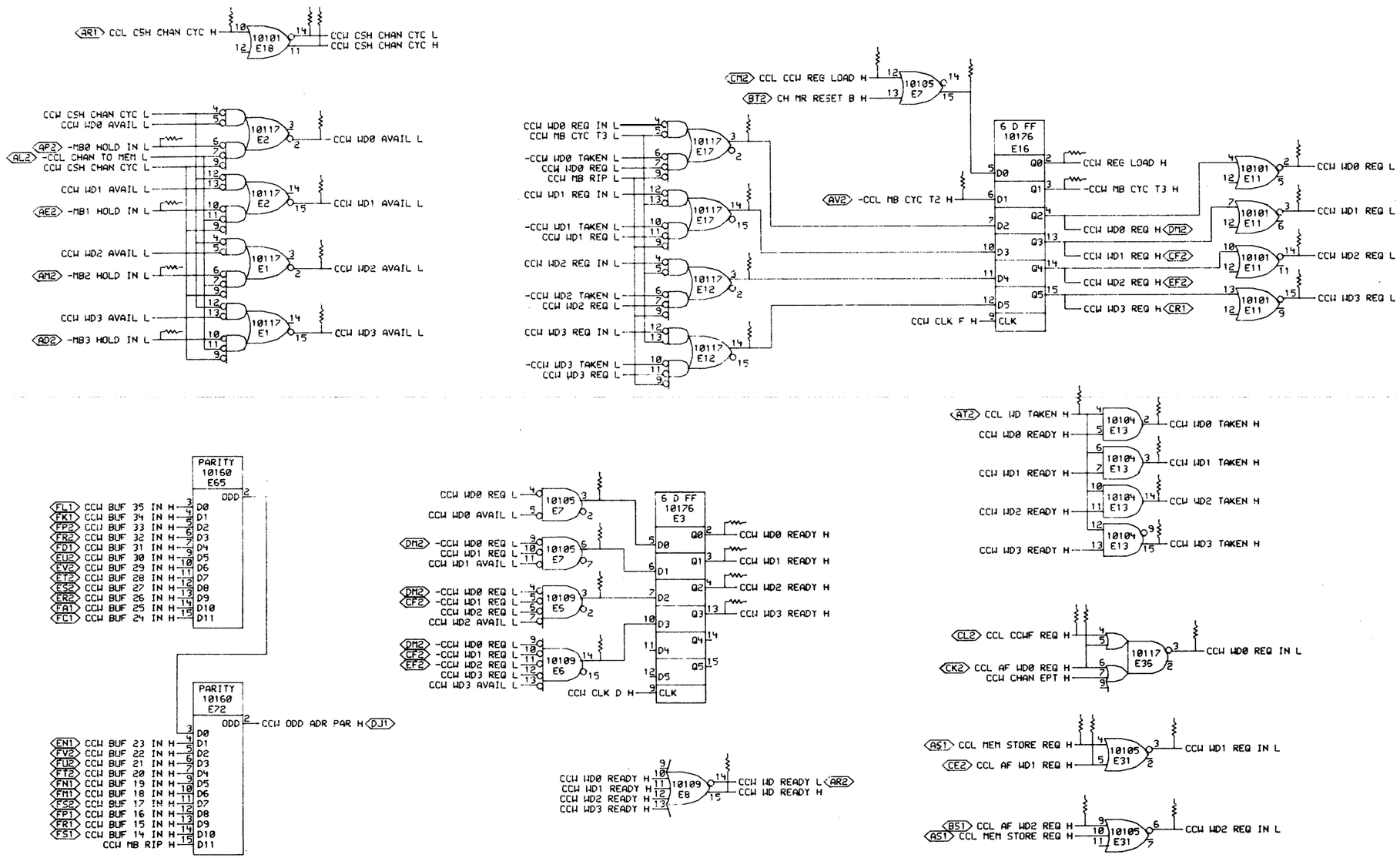

"THIS DRAWING AND SPECIFICATIONS, HEREIN, ARE THE PROPERTY OF DIGITAL EQUIPMENT CORPORATION AND SHALL NOT BE REPRODUCED OR COPIED OR USED IN WHOLE OR IN PART AS THE BASIS FOR THE MANUFACTURE OR SALE OF ITEMS WITHOUT WRITTEN PERMISSION.
COPYRIGHT © 1975, DIGITAL EQUIPMENT CORPORATION"

REVISIONS		
CHK	CHANGE NO.	REV

00001 A
M.SCHWARTZ

digital

DRN. S.Toomey DATE 24-SEP-75 ENG. DATE
CHK'D. DATE BOARD LOCATION: 4AF12
SHEET 1 OF 1
CCW4EXC(4,477) 17-SEP-75 10:04 NEXT HIGHER ASSEMBLY: B-DD-M8534-0
FIRST USED ON OPTION/MODEL: KL10

TITLE: CHANNEL CONTROL WORD

SIZE	CODE	NUMBER	REV.
D	CS	M8534-0-CCW4	A

237

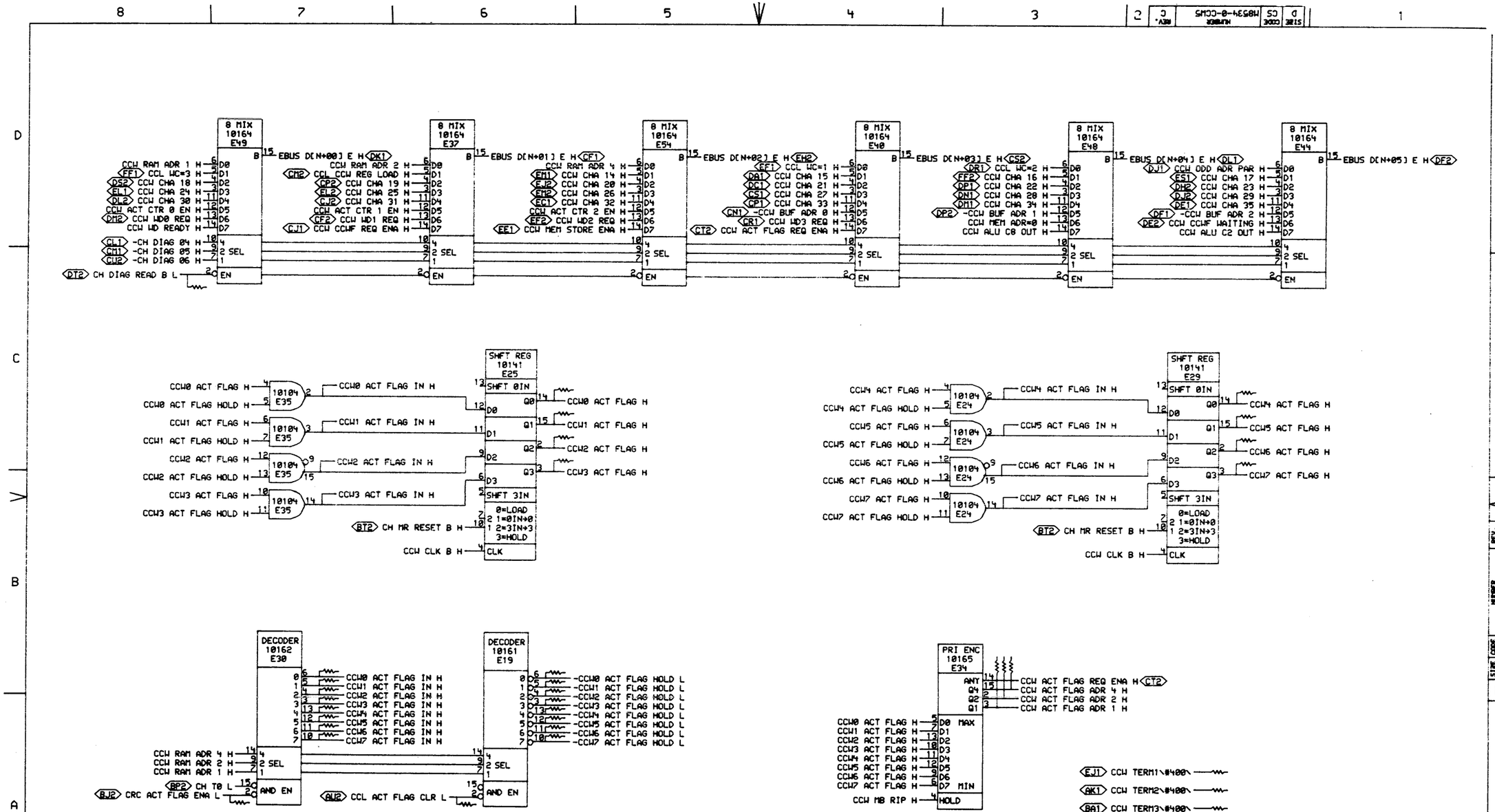

"THIS DRAWING AND SPECIFICATIONS, HEREIN, ARE THE PROPERTY OF DIGITAL EQUIPMENT CORPORATION AND SHALL NOT BE REPRODUCED OR COPIED OR USED IN WHOLE OR IN PART AS THE BASIS FOR THE MANUFACTURE OR SALE OF ITEMS WITHOUT WRITTEN PERMISSION.
COPYRIGHT © 1977, DIGITAL EQUIPMENT CORPORATION"

REVISIONS		
CHK	CHANGE NO.	REV
	M8534-MR0003	C
	M. SCHWARTZ	

digital

DRN. J. Crowley DATE 25-JUL-77 ENG. DATE 8/4/77
CHK'D. DATE
CCUSEX.DRW[4,571] 20-JUL-77 11:39
BOARD LOCATION: 4AF12
SHEET 1 OF 1
NEXT HIGHER ASSEMBLY: B-DD-M8534-0
FIRST USED ON OPTION/MODEL: KL10

TITLE: CHANNEL CONTROL WORD

SIZE	CODE	NUMBER	REV.
D	CS	M8534-0-CCW5	C

238

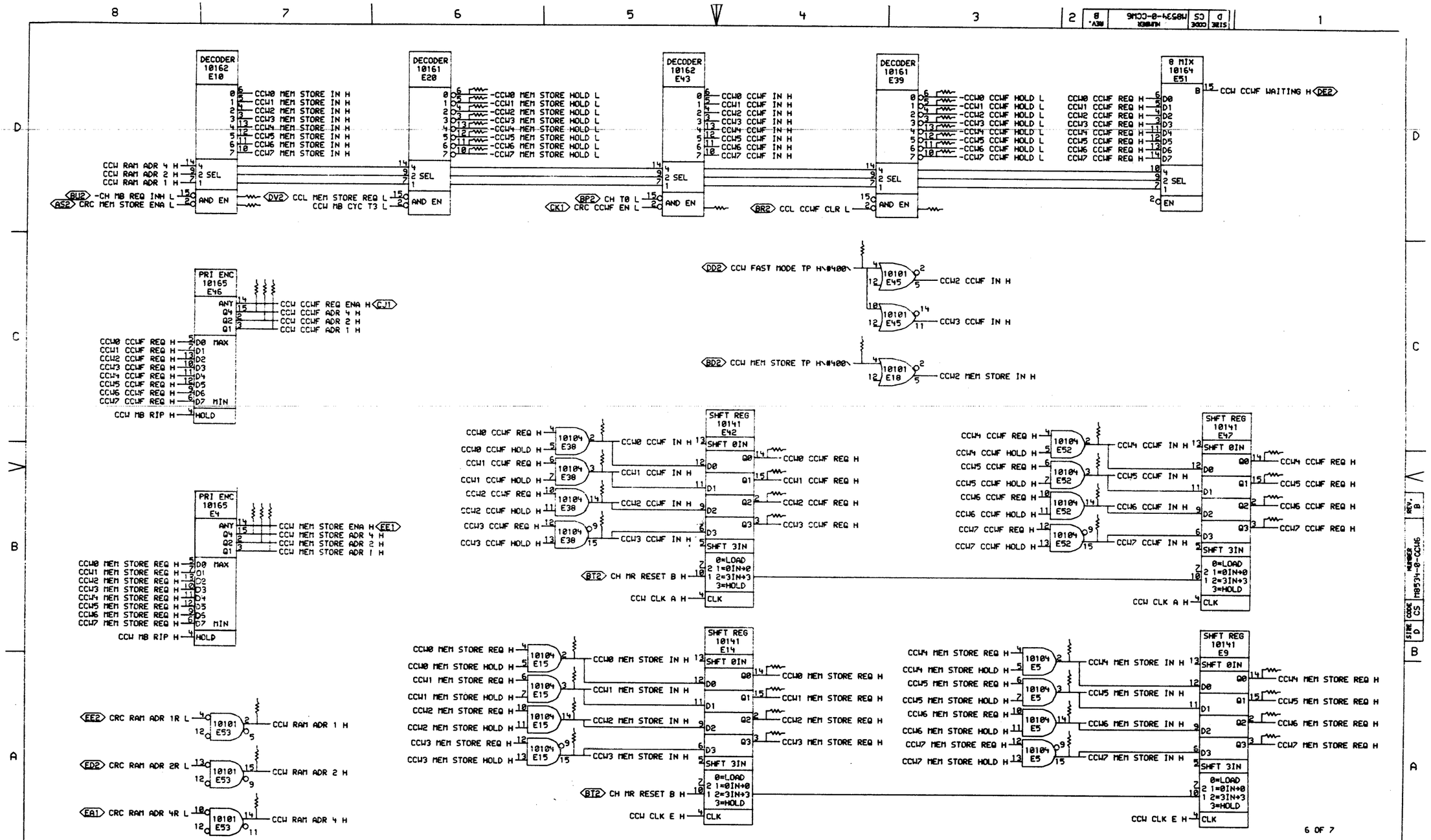

"THIS DRAWING AND SPECIFICATIONS, HEREIN, ARE THE PROPERTY OF DIGITAL EQUIPMENT CORPORATION AND SHALL NOT BE REPRODUCED OR COPIED OR USED IN WHOLE OR IN PART AS THE BASIS FOR THE MANUFACTURE OR SALE OF ITEMS WITHOUT WRITTEN PERMISSION. COPYRIGHT © 1977, DIGITAL EQUIPMENT CORPORATION"

REVISIONS		
CHK	CHANGE NO.	REV
	M8534-M0003	B
	M. SCHWARTZ	

digital

DRN. K. Loosley DATE 25-JUL-77 ENG. DATE
CHK'D. DATE BOARD LOCATION: 4AF12 SHEET 1 OF 1
CCWSEX.DRW[4,571] 20-JUL-77 11:39 NEXT HIGHER ASSEMBLY:
FIRST USED ON OPTION/MODEL: KL10 B-DD-M8534-0

TITLE: CHANNEL CONTROL WORD

SIZE	CODE	NUMBER	REV.
D	CS	M8534-0-CCW6	B

239

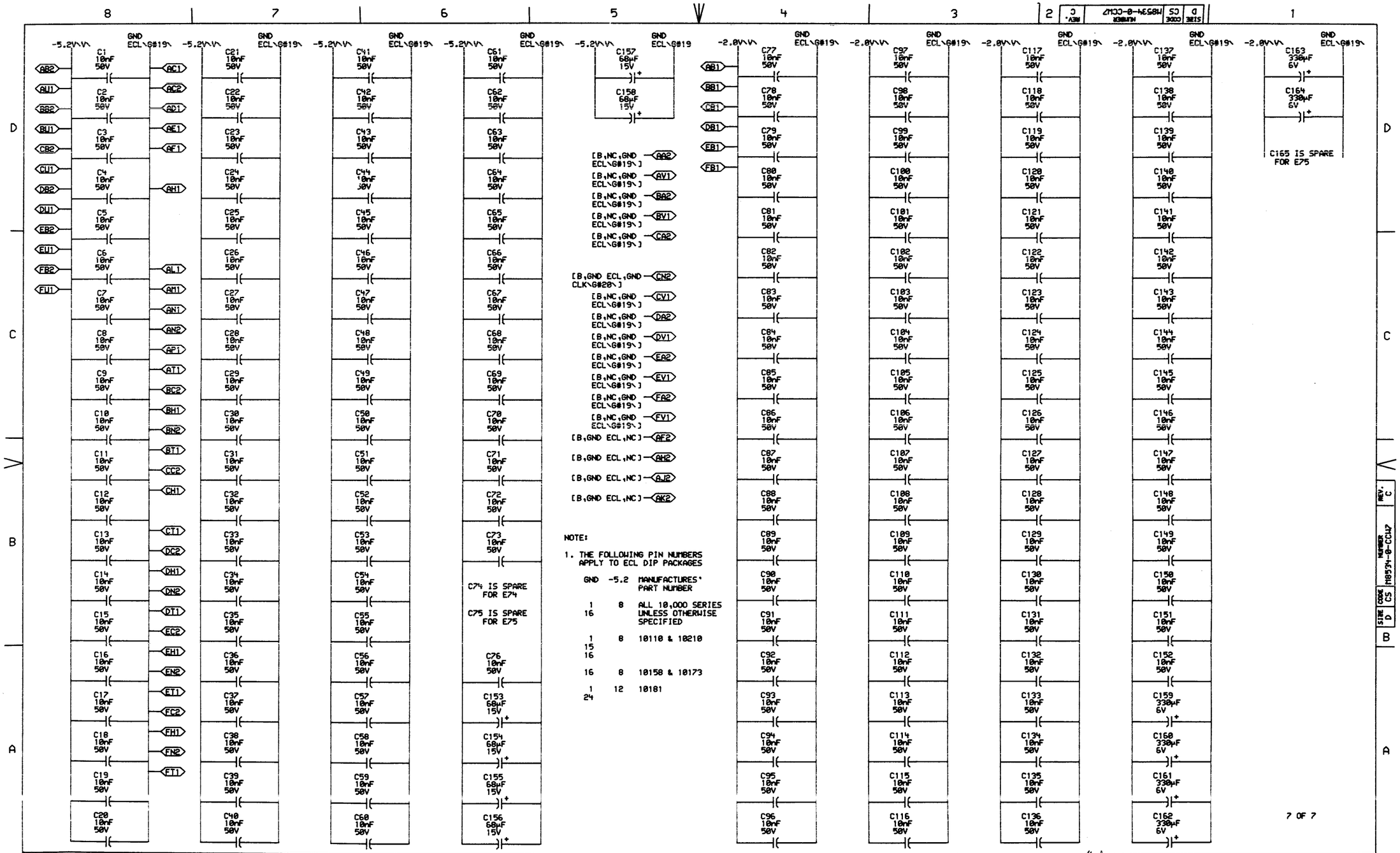

NOTE:

1. THE FOLLOWING PIN NUMBERS APPLY TO ECL DIP PACKAGES

GND	-5.2	MANUFACTURES' PART NUMBER
1 16	8	ALL 10,000 SERIES UNLESS OTHERWISE SPECIFIED
1 15 16	8	10110 & 10210
16	8	10158 & 10173
1 24	12	10181

"THIS DRAWING AND SPECIFICATIONS, HEREIN, ARE THE PROPERTY OF DIGITAL EQUIPMENT CORPORATION AND SHALL NOT BE REPRODUCED OR COPIED OR USED IN WHOLE OR IN PART AS THE BASIS FOR THE MANUFACTURE OR SALE OF ITEMS WITHOUT WRITTEN PERMISSION. COPYRIGHT © 1977, DIGITAL EQUIPMENT CORPORATION"

REVISIONS		
CHK	CHANGE NO.	REV
	M8534 MR003	C
	M. SCHWARTZ	

digital

DRN. | DATE 05-AUG-77 | ENG. | DATE
CHK'D. | DATE | BOARD LOCATION: 4AF12 | SHEET 1 OF 1

CCW7EX.DRW[4,571] 05-AUG-77 13:48 NEXT HIGHER ASSEMBLY:
FIRST USED ON OPTION/MODEL: KL10 B-DD-M8534-0

TITLE: CHANNEL CONTROL WORD

SIZE	CODE	NUMBER	REV.
D	CS	M8534-0-CCW7	C

NR 1

242

RESISTOR LOC(PIN)	SHOWN ON DRW#	REF	VALUE	TERMINATES SIGNAL
R207(1)	CCW4	C4	68Ω	%E12(14)
R208(1)	CCW4	C4	68Ω	%E12(3)
R206(1)	CCW4	D4	68Ω	%E17(14)
R213(1)	CCW4	D4	68Ω	%E17(3)
R175(1)	CCW1	B7	68Ω	%E50(15)
R255(1)	CCW2	A5	68Ω	%E55(14)
R240(1)	CCW3	A2	68Ω	%E55(2)
R129(1)	CCW2	B5	68Ω	%E55(3)
R113(1)	CCW4	B5	68Ω	%E6(14)
R114(1)	CCW4	B5	68Ω	%E6(3)
R193(1)	CCW1	B3	68Ω	%E62(15)
R192(1)	CCW1	B3	68Ω	%E62(2)
R252(1)	CCW4	B7	68Ω	%E65(2)
R194(1)	CCW1	B3	68Ω	%E69(2)
R212(1)	CCW4	D3	68Ω	%E7(15)
R112(1)	CCW4	B5	68Ω	%E7(3)
R110(1)	CCW4	B5	68Ω	%E7(6)
R256(1)	CCW2	C5	68Ω	%E70(2)
R195(1)	CCW1	C3	68Ω	%E73(15)
R196(1)	CCW1	C3	68Ω	%E73(2)
R70(1)	CCW5	A6	68Ω	-CCL ACT FLAG CLR H
R38(1)	CCW1	C5	68Ω	-CCL ACT FLAG REQ H
R234(1)	CCW4	B3	68Ω	CCL AF WD0 REQ H
R229(1)	CCW4	A3	68Ω	CCL AF WD1 REQ H
R226(1)	CCW4	A3	68Ω	CCL AF WD2 REQ H
R126(1)	CCW4	A3	68Ω	CCL AF WD3 REQ H
R135(1)	CCW2	C8	68Ω	-CCL ALU MINUS H
R131(1)	CCW2	B8	68Ω	-CCL ALU PLUS H
R147(1)	CCW4	D4	68Ω	CCL CCW REG LOAD H
R31(1)	CCW6	D3	68Ω	-CCL CCWF CLR H
R233(1)	CCW4	B3	68Ω	CCL CCWF REQ H
R124(1)	CCW2	C8	68Ω	-CCL CHAN EPT H
R145(1)	CCW3	D2	68Ω	CCL CONS 0 H
R141(1)	CCW3	D2	68Ω	CCL CONS 1 H
R142(1)	CCW3	C2	68Ω	CCL CONS 2 H
R121(1)	CCW4	D7	68Ω	CCL CSH CHAN CYC H
R39(1)	CCW1	C5	68Ω	-CCL ERR REQ H
R211(1)	CCW4	D3	68Ω	-CCL MB CYC T2 H
R241(1)	CCW2	B8	68Ω	CCL MB RIP H
R134(1)	CCW1	B7	68Ω	-CCL MEM ERR LATCH H

RESISTOR LOC(PIN)	SHOWN ON DRW#	REF	VALUE	TERMINATES SIGNAL
R220(1)	CCW4	A3	68Ω	CCL MEM STORE REQ H
R16(1)	CCW1	B5	68Ω	-CCL MEM STORE REQ H
R227(1)	CCW3	C2	68Ω	-CCL WC GE4 H
R230(1)	CCW3	C2	68Ω	-CCL WC=0 H
R222(1)	CCW3	C7	68Ω	CCL WC=1 H
R120(1)	CCW3	B7	68Ω	CCL WC=2 H
R102(1)	CCW3	B7	68Ω	CCL WC=3 H
R117(1)	CCW4	C3	68Ω	CCL WD TAKEN H
R257(1)	CCW2	A4	68Ω	CCL ZERO FILL H
R139(1)	CCW2	B5	68Ω	-CCL ZERO FILL H
R100(1)	CCW3	C2	68Ω	CCW ACT CTR 0 EN H
R177(1)	CCW3	B2	68Ω	CCW ACT CTR 1 EN H
R183(1)	CCW3	A2	68Ω	CCW ACT CTR 2 EN H
R127(1)	CCW5	B3	68Ω	CCW ACT FLAG ADR 1 H
R161(1)	CCW5	B3	68Ω	CCW ACT FLAG ADR 2 H
R167(1)	CCW5	B3	68Ω	CCW ACT FLAG ADR 4 H
R44(1)	CCW3	D1	68Ω	CCW ALU C1 H
R51(1)	CCW3	D6	68Ω	CCW ALU C16 H
R235(1)	CCW3	A4	68Ω	CCW ALU C2 OUT H
R52(1)	CCW3	D4	68Ω	CCW ALU C4 H
R50(1)	CCW3	A4	68Ω	CCW ALU C8 OUT H
R108(1)	CCW3	C1	68Ω	CCW ALU CG1 H
R191(1)	CCW3	C2	68Ω	CCW ALU CG2 H
R190(1)	CCW3	C4	68Ω	CCW ALU CG4 H
R189(1)	CCW3	C5	68Ω	CCW ALU CG8 H
R185(1)	CCW3	C1	68Ω	CCW ALU CP1 H
R187(1)	CCW3	C2	68Ω	CCW ALU CP2 H
R186(1)	CCW3	C4	68Ω	CCW ALU CP4 H
R184(1)	CCW3	C5	68Ω	CCW ALU CP8 H
R45(1)	CCW2	C7	68Ω	CCW ALU MINUS H
R109(1)	CCW2	B7	68Ω	CCW ALU MINUS A H
R46(1)	CCW2	B7	68Ω	CCW ALU PLUS H
R53(1)	CCW2	B7	68Ω	CCW ALU PLUS A H
R170(1)	CCW1	B5	68Ω	CCW BUF SEL 1 H
R165(1)	CCW1	C5	68Ω	CCW BUF SEL 2 H
R122(1)	CCW6	C7	68Ω	CCW CCWF ADR 1 H
R168(1)	CCW6	C7	68Ω	CCW CCWF ADR 2 H
R174(1)	CCW6	C7	68Ω	CCW CCWF ADR 4 H
R136(1)	CCW2	D3	68Ω	CCW CHA 27 ENA H
R49(1)	CCW2	D3	68Ω	CCW CHA 28 ENA H

RESISTOR LOC(PIN)	SHOWN ON DRW#	REF	VALUE	TERMINATES SIGNAL
R47(1)	CCW2	D3	68Ω	CCW CHA 29 ENA H
R48(1)	CCW2	D1	68Ω	CCW CHA 30 ENA H
R254(1)	CCW2	D1	68Ω	CCW CHA 31 ENA H
R146(1)	CCW2	D1	68Ω	CCW CHA 32 ENA H
R143(1)	CCW2	D1	68Ω	CCW CHA 33 ENA H
R144(1)	CCW2	D1	68Ω	CCW CHA 34 ENA H
R140(1)	CCW2	D1	68Ω	CCW CHA 35 ENA H
R231(1)	CCW2	C7	68Ω	CCW CHAN EPT H
R133(1)	CCW2	C7	68Ω	-CCW CHAN EPT H
R96(1)	CCW2	C1	68Ω	CCW CLK A H
R24(1)	CCW2	C1	68Ω	CCW CLK B H
R111(1)	CCW2	C1	68Ω	CCW CLK D H
R62(1)	CCW2	C1	68Ω	CCW CLK E H
R209(1)	CCW2	C1	68Ω	CCW CLK F H
R259(1)	CCW4	D6	68Ω	CCW CSH CHAN CYC H
R199(1)	CCW4	D7	68Ω	-CCW CSH CHAN CYC H
R251(1)	CCW3	B7	68Ω	CCW DATA ADR 34 H
R249(1)	CCW3	B7	68Ω	-CCW DATA ADR 34 H
R250(1)	CCW3	B7	68Ω	CCW DATA ADR 35 H
R246(1)	CCW3	B7	68Ω	-CCW DATA ADR 35 H
R232(1)	CCW3	C4	68Ω	-CCW DATA ADR=0 H
R245(1)	CCW3	C4	68Ω	-CCW DATA ADR=1 H
R239(1)	CCW3	B4	68Ω	-CCW DATA ADR=2 H
R244(1)	CCW3	B4	68Ω	-CCW DATA ADR=3 H
R172(1)	CCW1	C7	68Ω	CCW ERR ADR 0 H
R166(1)	CCW1	C7	68Ω	CCW ERR ADR 1 H
R125(1)	CCW1	B7	68Ω	CCW ERR ADR 2 H
R132(1)	CCW6	C4	68Ω	CCW FAST MODE TP H\#400\
R20(1)	CCW4	D3	68Ω	-CCW MB CYC T3 H
R57(1)	CCW2	B7	68Ω	CCW MB RIP H
R155(1)	CCW2	B7	68Ω	-CCW MB RIP H
R238(1)	CCW1	B2	68Ω	CCW MEM ADR=0 H
R128(1)	CCW6	B7	68Ω	CCW MEM STORE ADR 1 H
R171(1)	CCW6	B7	68Ω	CCW MEM STORE ADR 2 H
R169(1)	CCW6	B7	68Ω	CCW MEM STORE ADR 4 H
R123(1)	CCW6	C4	68Ω	CCW MEM STORE TP H\#400\
R178(1)	CCW2	D8	68Ω	CCW MIX 14 H
R176(1)	CCW2	D8	68Ω	CCW MIX 15 H
R179(1)	CCW2	D8	68Ω	CCW MIX 16 H
R173(1)	CCW2	C8	68Ω	CCW MIX 17 H

RESISTOR LOC(PIN)	SHOWN ON DRW#	REF	VALUE	TERMINATES SIGNAL
R102(1)	CCW2	D6	68Ω	CCW MIX 18 H
R104(1)	CCW2	D6	68Ω	CCW MIX 19 H
R107(1)	CCW2	D6	68Ω	CCW MIX 20 H
R108(1)	CCW2	D6	68Ω	CCW MIX 21 H
R105(1)	CCW2	D6	68Ω	CCW MIX 22 H
R103(1)	CCW2	C6	68Ω	CCW MIX 23 H
R224(1)	CCW2	D4	68Ω	CCW MIX 24 H
R223(1)	CCW2	D4	68Ω	CCW MIX 25 H
R225(1)	CCW2	D4	68Ω	CCW MIX 26 H
R221(1)	CCW2	D4	68Ω	CCW MIX 27 H
R217(1)	CCW2	D4	68Ω	CCW MIX 28 H
R218(1)	CCW2	C4	68Ω	CCW MIX 29 H
R216(1)	CCW2	D2	68Ω	CCW MIX 30 H
R220(1)	CCW2	D2	68Ω	CCW MIX 31 H
R219(1)	CCW2	D2	68Ω	CCW MIX 32 H
R215(1)	CCW2	D2	68Ω	CCW MIX 33 H
R214(1)	CCW2	D2	68Ω	CCW MIX 34 H
R210(1)	CCW2	C2	68Ω	CCW MIX 35 H
R13(1)	CCW6	A7	68Ω	CCW RAM ADR 1 H
R5(1)	CCW6	A7	68Ω	CCW RAM ADR 2 H
R11(1)	CCW6	A7	68Ω	CCW RAM ADR 4 H
R106(1)	CCW4	D3	68Ω	CCW REG LOAD H
R243(1)	CCW5	A2	68Ω	CCW TERM11\#400\
R203(1)	CCW5	A2	68Ω	CCW TERM12\#400\
R204(1)	CCW5	A2	68Ω	CCW TERM13\#400\
R247(1)	CCW3	C7	68Ω	CCW WC=1 H
R138(1)	CCW3	C7	68Ω	-CCW WC=1 H
R242(1)	CCW3	B7	68Ω	CCW WC=2 H
R248(1)	CCW3	B7	68Ω	-CCW WC=2 H
R137(1)	CCW3	B7	68Ω	-CCW WC=3 H
R101(1)	CCW4	A5	68Ω	CCW WD READY H
R154(1)	CCW4	D6	68Ω	-CCW WD0 AVAIL H
R119(1)	CCW4	B5	68Ω	CCW WD0 READY H
R153(1)	CCW4	D2	68Ω	-CCW WD0 REQ H
R163(1)	CCW4	B2	68Ω	-CCW WD0 REQ IN H
R164(1)	CCW4	C2	68Ω	CCW WD0 TAKEN H
R148(1)	CCW4	D6	68Ω	-CCW WD1 AVAIL H
R118(1)	CCW4	B5	68Ω	CCW WD1 READY H
R149(1)	CCW4	D2	68Ω	-CCW WD1 REQ H
R162(1)	CCW4	A2	68Ω	-CCW WD1 REQ IN H

NOTE:

1. ALL TERMINATORS HAVE PIN TWO CONNECTED TO -2.0V AND ARE 5% 1/4WATT UNLESS OTHERWISE SPECIFIED
2. ENTRIES ARE SORTED BY SIGNAL NAME
3. % INDICATES OUTPUT OF DIP LOC AND () INDICATES PIN NUMBER

"THIS DRAWING AND SPECIFICATIONS, HEREIN, ARE THE PROPERTY OF DIGITAL EQUIPMENT CORPORATION AND SHALL NOT BE REPRODUCED OR COPIED OR USED IN WHOLE OR IN PART AS THE BASIS FOR THE MANUFACTURE OR SALE OF ITEMS WITHOUT WRITTEN PERMISSION.
"COPYRIGHT © 1977, DIGITAL EQUIPMENT CORPORATION"

REVISIONS		
CHK	CHANGE NO.	REV
	M8534-MR003	C
	M. SCHWARTZ	

digital	DRN. C. Smith	DATE 25-JUL-77	ENG.
	CHK'D.	DATE	BOARD LOCATION:
	M85341.DRW(4,571)	25-JUL-77 14:15	SHEET 1 OF 2
	FIRST USED ON OPTION/MODEL: KL10		NEXT HIGHER ASSEMBLY: B-DD-M8534-0

TITLE: CHANNEL CONTROL TERMINATORS

SIZE	CODE	NUMBER	REV.
D	CS	M8534-0-RES	C

MR 1

241

RESISTOR LOC(PIN)	SHOWN ON DRW#	REF	VALUE	TERMINATES SIGNAL
R160(1)	CCW4	C2	68Ω	CCW WD1 TAKEN H
R202(1)	CCW4	C6	68Ω	-CCW WD2 AVAIL H
R115(1)	CCW4	B5	68Ω	CCW WD2 READY H
R159(1)	CCW4	C2	68Ω	-CCW WD2 REQ H
R157(1)	CCW4	A2	68Ω	-CCW WD2 REQ IN H
R158(1)	CCW4	B2	68Ω	CCW WD2 TAKEN H
R197(1)	CCW4	C6	68Ω	-CCW WD3 AVAIL H
R116(1)	CCW4	B5	68Ω	CCW WD3 READY H
R201(1)	CCW4	C2	68Ω	-CCW WD3 REQ H
R152(1)	CCW4	A2	68Ω	-CCW WD3 REQ IN H
R156(1)	CCW4	B2	68Ω	CCW WD3 TAKEN H
R86(1)	CCW5	C6	68Ω	CCW0 ACT FLAG H
R28(1)	CCW5	B6	68Ω	CCW0 ACT FLAG HOLD H
R19(1)	CCW5	B7	68Ω	CCW0 ACT FLAG IN H
R91(1)	CCW6	D3	68Ω	CCW0 CCWF HOLD H
R89(1)	CCW6	C5	68Ω	CCW0 CCWF IN H
R101(1)	CCW6	B4	68Ω	CCW0 CCWF REQ H
R10(1)	CCW6	D6	68Ω	CCW0 MEM STORE HOLD H
R63(1)	CCW6	A5	68Ω	CCW0 MEM STORE IN H
R59(1)	CCW6	A4	68Ω	CCW0 MEM STORE REQ H
R81(1)	CCW5	C6	68Ω	CCW1 ACT FLAG H
R29(1)	CCW5	B6	68Ω	CCW1 ACT FLAG HOLD H
R21(1)	CCW5	B7	68Ω	CCW1 ACT FLAG IN H
R92(1)	CCW6	D3	68Ω	CCW1 CCWF HOLD H
R90(1)	CCW6	B5	68Ω	CCW1 CCWF IN H
R100(1)	CCW6	B4	68Ω	CCW1 CCWF REQ H
R17(1)	CCW6	D6	68Ω	CCW1 MEM STORE HOLD H
R67(1)	CCW6	A5	68Ω	CCW1 MEM STORE IN H
R56(1)	CCW6	A4	68Ω	CCW1 MEM STORE REQ H
R79(1)	CCW5	C6	68Ω	CCW2 ACT FLAG H
R25(1)	CCW5	B6	68Ω	CCW2 ACT FLAG HOLD H
R23(1)	CCW5	B7	68Ω	CCW2 ACT FLAG IN H
R88(1)	CCW6	D3	68Ω	CCW2 CCWF HOLD H
R93(1)	CCW6	B5	68Ω	CCW2 CCWF IN H
R87(1)	CCW6	B4	68Ω	CCW2 CCWF REQ H
R15(1)	CCW6	D6	68Ω	CCW2 MEM STORE HOLD H
R65(1)	CCW6	A5	68Ω	CCW2 MEM STORE IN H
R54(1)	CCW6	A4	68Ω	CCW2 MEM STORE REQ H
R83(1)	CCW5	C6	68Ω	CCW3 ACT FLAG H
R27(1)	CCW5	A6	68Ω	CCW3 ACT FLAG HOLD H

RESISTOR LOC(PIN)	SHOWN ON DRW#	REF	VALUE	TERMINATES SIGNAL
R22(1)	CCW5	A7	68Ω	CCW3 ACT FLAG IN H
R85(1)	CCW6	D3	68Ω	CCW3 CCWF HOLD H
R97(1)	CCW6	B5	68Ω	CCW3 CCWF IN H
R84(1)	CCW6	B4	68Ω	CCW3 CCWF REQ H
R14(1)	CCW6	D6	68Ω	CCW3 MEM STORE HOLD H
R66(1)	CCW6	A5	68Ω	CCW3 MEM STORE IN H
R55(1)	CCW6	A4	68Ω	CCW3 MEM STORE REQ H
R82(1)	CCW5	C2	68Ω	CCW4 ACT FLAG H
R75(1)	CCW5	A6	68Ω	CCW4 ACT FLAG HOLD H
R73(1)	CCW5	A7	68Ω	CCW4 ACT FLAG IN H
R40(1)	CCW6	D3	68Ω	CCW4 CCWF HOLD H
R32(1)	CCW6	C2	68Ω	CCW4 CCWF IN H
R94(1)	CCW6	B1	68Ω	CCW4 CCWF REQ H
R7(1)	CCW6	D6	68Ω	CCW4 MEM STORE HOLD H
R58(1)	CCW6	A2	68Ω	CCW4 MEM STORE IN H
R6(1)	CCW6	A1	68Ω	CCW4 MEM STORE REQ H
R78(1)	CCW5	C2	68Ω	CCW5 ACT FLAG H
R76(1)	CCW5	A6	68Ω	CCW5 ACT FLAG HOLD H
R74(1)	CCW5	A7	68Ω	CCW5 ACT FLAG IN H
R41(1)	CCW6	D3	68Ω	CCW5 CCWF HOLD H
R33(1)	CCW6	B2	68Ω	CCW5 CCWF IN H
R95(1)	CCW6	B1	68Ω	CCW5 CCWF REQ H
R9(1)	CCW6	D6	68Ω	CCW5 MEM STORE HOLD H
R60(1)	CCW6	A2	68Ω	CCW5 MEM STORE IN H
R8(1)	CCW6	A1	68Ω	CCW5 MEM STORE REQ H
R68(1)	CCW5	C2	68Ω	CCW6 ACT FLAG H
R69(1)	CCW5	A6	68Ω	CCW6 ACT FLAG HOLD H
R77(1)	CCW5	A7	68Ω	CCW6 ACT FLAG IN H
R37(1)	CCW6	D3	68Ω	CCW6 CCWF HOLD H
R34(1)	CCW6	B2	68Ω	CCW6 CCWF IN H
R98(1)	CCW6	B1	68Ω	CCW6 CCWF REQ H
R3(1)	CCW6	D6	68Ω	CCW6 MEM STORE HOLD H
R61(1)	CCW6	A2	68Ω	CCW6 MEM STORE IN H
R4(1)	CCW6	A1	68Ω	CCW6 MEM STORE REQ H
R72(1)	CCW5	C2	68Ω	CCW7 ACT FLAG H
R71(1)	CCW5	A6	68Ω	CCW7 ACT FLAG HOLD H
R80(1)	CCW5	A7	68Ω	CCW7 ACT FLAG IN H
R35(1)	CCW6	D3	68Ω	CCW7 CCWF HOLD H
R36(1)	CCW6	B2	68Ω	CCW7 CCWF IN H
R99(1)	CCW6	B1	68Ω	CCW7 CCWF REQ H

RESISTOR LOC(PIN)	SHOWN ON DRW#	REF	VALUE	TERMINATES SIGNAL
R2(1)	CCW6	D6	68Ω	CCW7 MEM STORE HOLD H
R64(1)	CCW6	A2	68Ω	CCW7 MEM STORE IN H
R1(1)	CCW6	A1	68Ω	CCW7 MEM STORE REQ H
R236(1)	CCW5	C8	68Ω	-CH DIAG READ B H
R12(1)	CCW6	D7	68Ω	CH MB REQ INH H
R130(1)	CCW2	C2	68Ω	CLK CCW H
R26(1)	CCW5	A7	68Ω	-CRC ACT FLAG ENA H
R30(1)	CCW6	D4	68Ω	-CRC CCWF EN H
R10(1)	CCW6	D7	68Ω	-CRC MEM STORE ENA H
R258(1)	CCW2	C2	68Ω	DIAG CHANNEL CLK STOP H
R253(1)	CCW1	B5	68Ω	-DIAG LOAD FUNC 070 H
R151(1)	CCW4	D7	68Ω	MB0 HOLD IN H
R150(1)	CCW4	D7	68Ω	MB1 HOLD IN H
R200(1)	CCW4	C7	68Ω	MB2 HOLD IN H
R198(1)	CCW4	C7	68Ω	MB3 HOLD IN H

NOTE:

1. ALL TERMINATORS HAVE PIN TWO CONNECTED TO -2.0V AND ARE 5% 1/4WATT UNLESS OTHERWISE SPECIFIED
2. ENTRIES ARE SORTED BY SIGNAL NAME
3. % INDICATES OUTPUT OF DIP LOC AND
   () INDICATES PIN NUMBER

"THIS DRAWING AND SPECIFICATIONS, HEREIN, ARE THE PROPERTY OF DIGITAL EQUIPMENT CORPORATION AND SHALL NOT BE REPRODUCED OR COPIED OR USED IN WHOLE OR IN PART AS THE BASIS FOR THE MANUFACTURE OR SALE OF ITEMS WITHOUT WRITTEN PERMISSION.
COPYRIGHT © 1977, DIGITAL EQUIPMENT CORPORATION"

REVISIONS		
CHK	CHANGE NO.	REV

digital

DRN. C Smith DATE 25-JUL-77 ENG. M Schwartz DATE 8/15/77
CHK'D. DATE BOARD LOCATION: SHEET 2 OF 2
M8534.DRW[4,571] 25-JUL-77 14:15 NEXT HIGHER ASSEMBLY: B-DD-M8534-0
FIRST USED ON OPTION/MODEL: KL10

TITLE: CHANNEL CONTROL TERMINATORS

SIZE	CODE	NUMBER	REV.
D	CS	M8534-0-RES	C

MR

242

REVISION CONTROL SHEET

CUSTOMER PRINT SET	MFG SET	DRAWING NO	NO OF SHT	DESCRIPTION	OPTION NO/FILE DATE	REVISIONS				
			-	MODULE REVISION		A	B	C	C	
		D-UA-M8535-Ø-Ø	6	CHANNEL RAM CONTROL		-	A	B	B1	
		D-CS-M8535-Ø-CRC1	1	CHANNEL RAM CONTROL		-	A	B	B1	
		D-CS-M8535-Ø-CRC2	1	CHANNEL RAM CONTROL		-	A	B	B1	
		D-CS-M8535-Ø-CRC3	1	CHANNEL RAM CONTROL		-	A	B	B1	
		D-CS-M8535-Ø-CRC4	1	CHANNEL RAM CONTROL		-	A	B	B1	
		D-CS-M8535-Ø-CRC5	1	CHANNEL RAM CONTROL		-	A	B	B1	
		D-CS-M8535-Ø-CRC6	1	CHANNEL RAM CONTROL		-	A	B	B1	
		D-CS-M8535-Ø-CRC7	1	CHANNEL RAM CONTROL PWR, GND, AND CAPS		-	A	B	B1	
		D-CS-M8535-Ø-RES	2	CHANNEL RAM CONTROL TERMINATORS		—	A	B	B1	
		K-CO-M8535-Ø-4	1	CHANNEL RAM CONTROL (CALDEC DATA BASE)		B	B	B	B	
		D-AH-M8535-Ø-5	4	CHANNEL RAM CONTROL		A	A	A	A	
		B-MH-M8535-Ø-6	1	MODULE ECO HISTORY		-	A	B	B	
		5010925 P00-M8535-ØØ	-	ETCH CIRCUIT BOARD PROCESS SHEET (REF ONLY)		B	B	B	B	
									REWORK VERSION	
					ECO NO	ORIG	00001	00002	00003	

CUSTOMER PRINT SET CODES
X = PRINT OF DOCUMENT INCLUDED IN PRINT SET
C = INCLUDES ALL PRINTS INDICATED ON DOCUMENT
S = CONFIDENTIAL AUTHORIZED SIGNATURE REQUIRED

TITLE		SIZE	CODE	NUMBER	REV
CHANNEL RAM CONTROL	SHEET 2 OF 3	B	DD	M8535-Ø	C

MR

246

"THIS DRAWING AND SPECIFICATIONS, HEREIN, ARE THE PROPERTY OF DIGITAL EQUIPMENT CORPORATION AND SHALL NOT BE REPRODUCED OR COPIED OR USED IN WHOLE OR IN PART AS THE BASIS FOR THE MANUFACTURE OR SALE OF ITEMS WITHOUT WRITTEN PERMISSION
COPYRIGHT © 1975 DIGITAL EQUIPMENT CORPORATION"

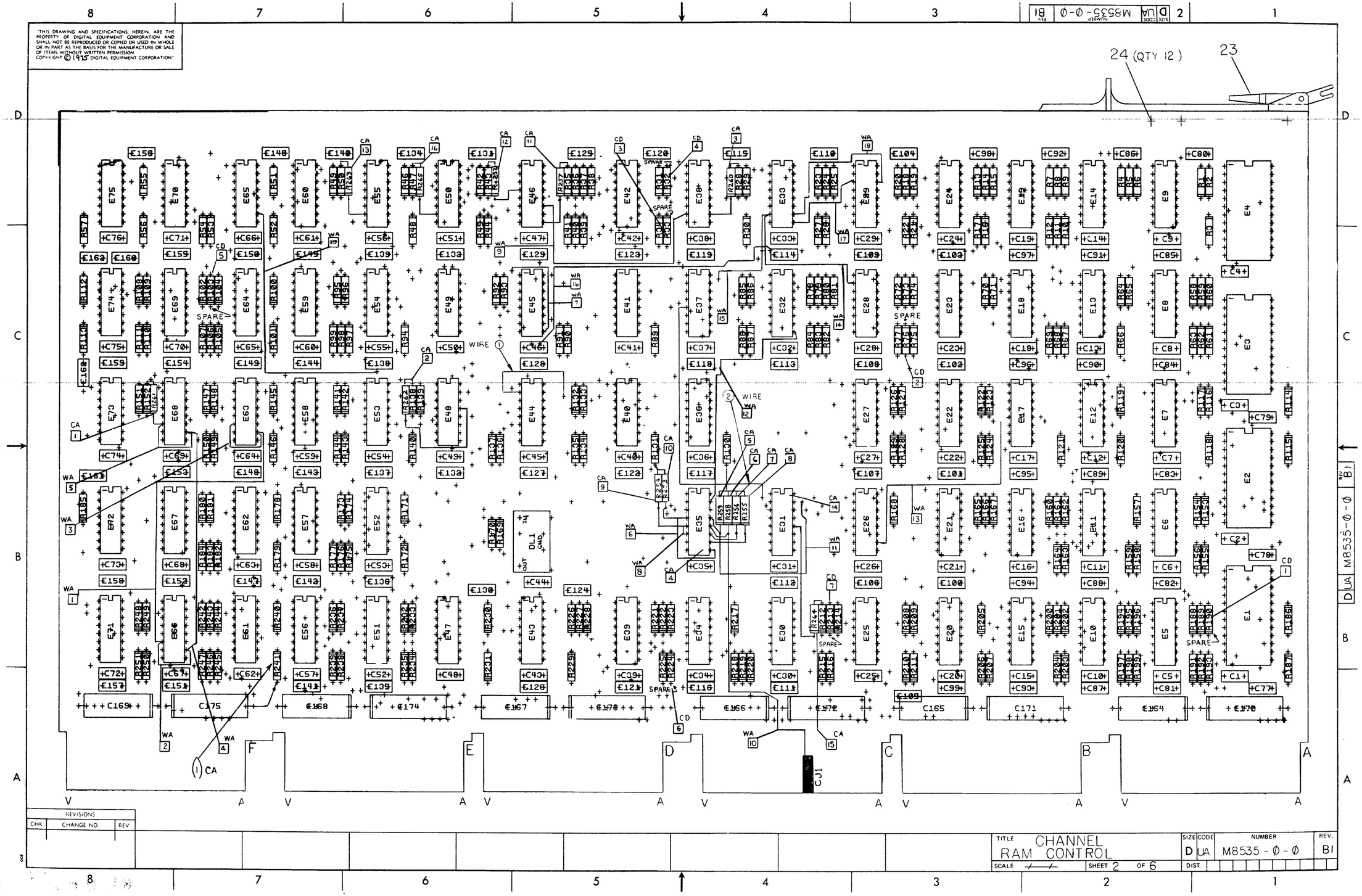

247

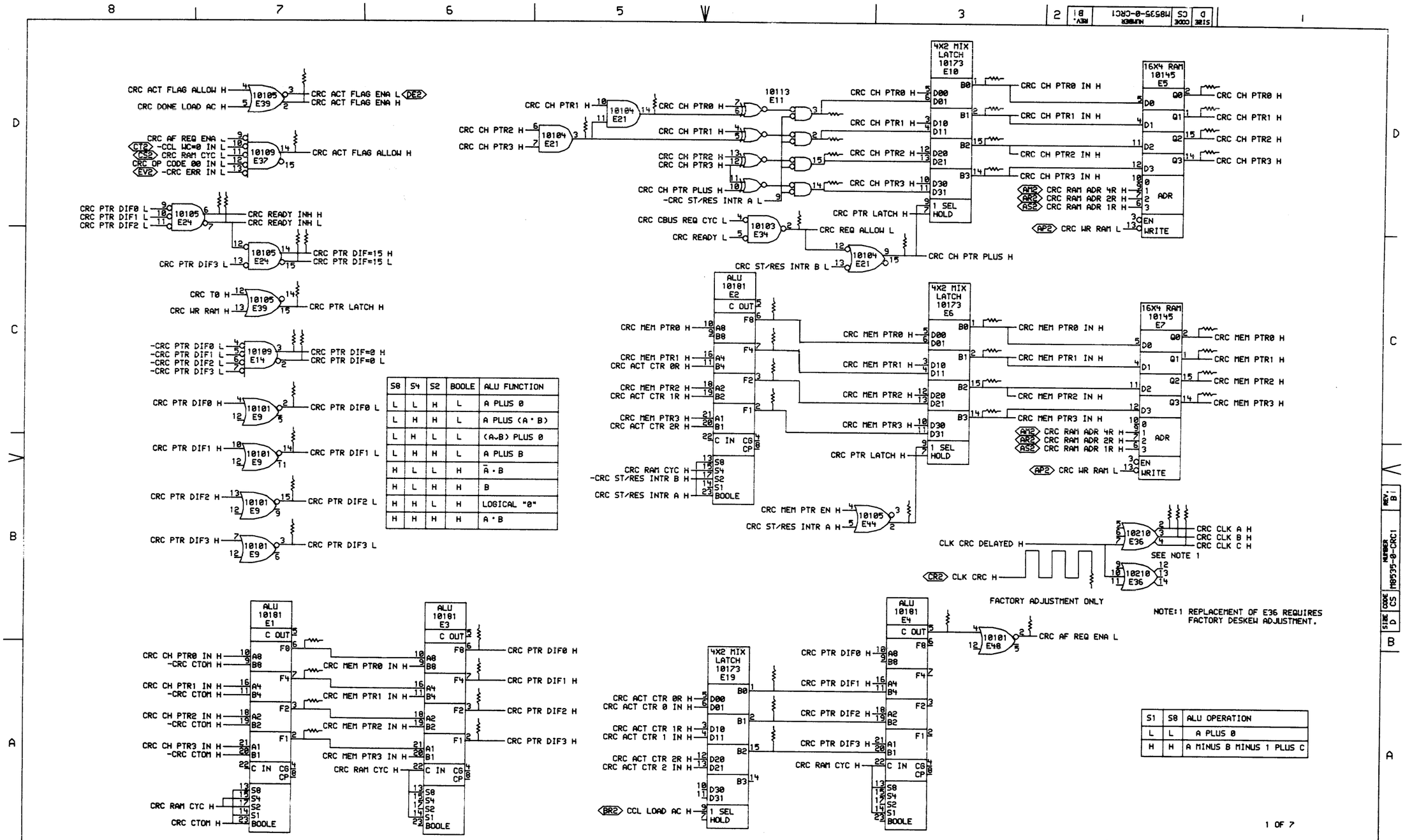

S8	S4	S2	BOOLE	ALU FUNCTION
L	L	H	L	A PLUS 0
L	H	H	L	A PLUS (A · B)
L	H	L	L	(A∨B) PLUS 0
L	H	H	L	A PLUS B
H	L	L	H	$\bar{A}$ · B
H	L	H	H	B
H	H	L	H	LOGICAL "0"
H	H	H	H	A · B

S1	S8	ALU OPERATION
L	L	A PLUS 0
H	H	A MINUS B MINUS 1 PLUS C

"THIS DRAWING AND SPECIFICATIONS, HEREIN, ARE THE PROPERTY OF DIGITAL EQUIPMENT CORPORATION AND SHALL NOT BE REPRODUCED OR COPIED OR USED IN WHOLE OR IN PART AS THE BASIS FOR THE MANUFACTURE OR SALE OF ITEMS WITHOUT WRITTEN PERMISSION.
COPYRIGHT © 1976, DIGITAL EQUIPMENT CORPORATION"

REVISIONS

CHK	CHANGE NO.	REV

CHK CHANGE NO. PG. V8535-00003 B1

DRN. DATE 22-JUN-76 ENG. DATE
CHK'D. DATE
BOARD LOCATION: 4A10
SHEET 1 OF 1

TITLE: CHANNEL RAM CONTROL

CRC1EX.DRW[4,477] 26-MAY-76 15:43 NEXT HIGHER ASSEMBLY:
FIRST USED ON OPTION/MODEL: KL10 B-DD-M8535-0

SIZE	CODE	NUMBER	REV.
D	CS	M8535-0-CRC1	B1

248

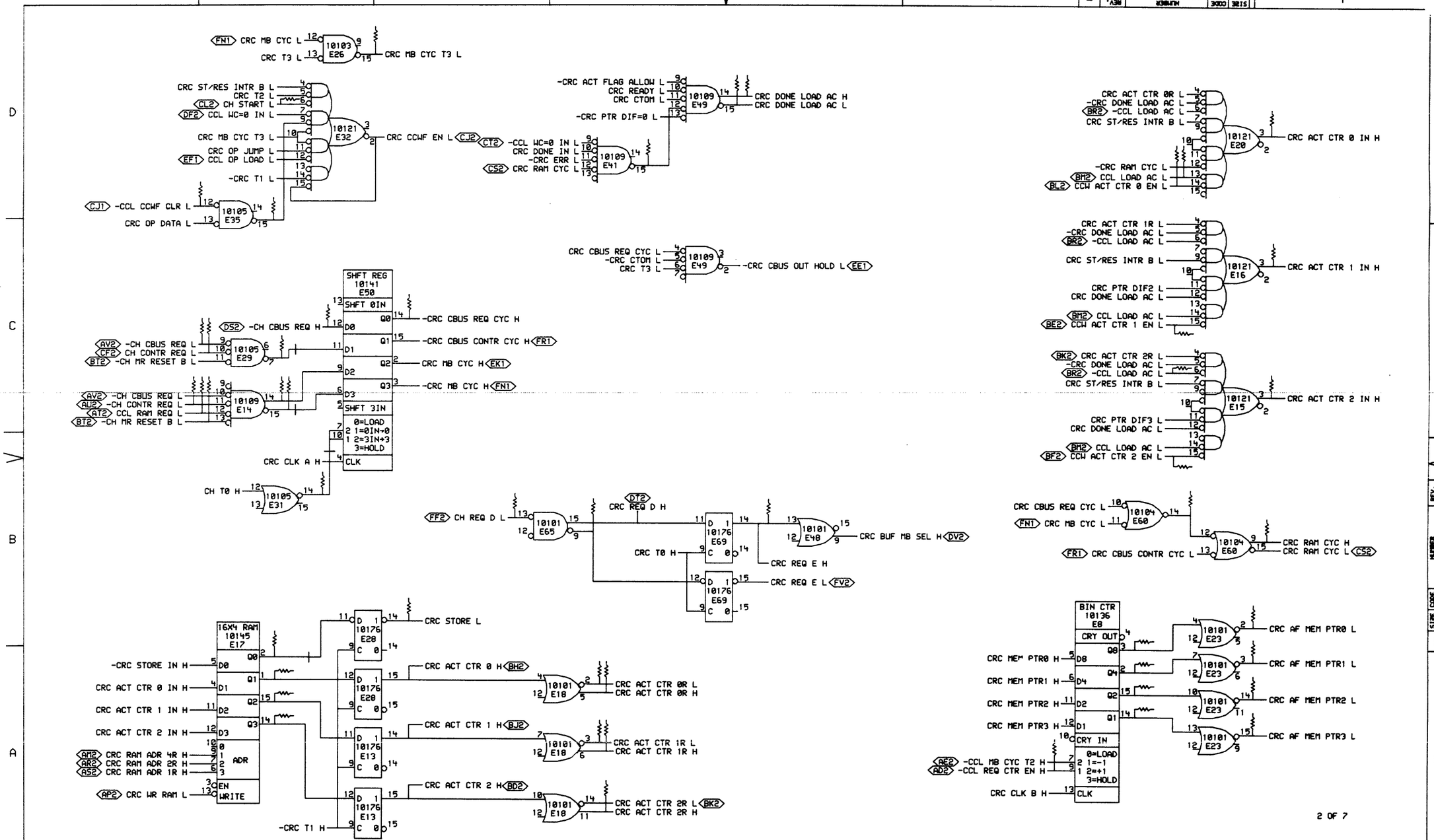

"THIS DRAWING AND SPECIFICATIONS, HEREIN, A E THE PROPERTY OF DIGITAL EQUIPMENT CORPORATION A D SHALL NOT BE REPRODUCED OR COPIED OR USED IN WHOLE OR IN PART A THE BASIS FOR THE MANUFACTURE OR SALE OF ITEMS WITHOUT WRITTEN PERMISSION.
COPYRIGHT © 1976, DIGITAL EQUIPMENT CORPORATION"

REVISIONS					
CHK	CHANGE NO.	REV	CHK	CHANGE NO.	REV.
				M8535-00008	B1

digital

DRW. | DATE 22-JUN-76 | ENG. | DATE
CHK'D. | DATE | BOARD LOCATION: 4AF10 | SHEET 1 OF 1
CRC2EX.DRW[4,477] 26-MAY-76 13:10 | NEXT HIGHER ASSEMBLY:
FIRST USED ON OPTION/MODEL: KL10 | B-DD-M8535

TITLE: CHANNEL RAM CONTROL

SIZE	CODE	NUMBER	REV.
D	CS	M8535-0-CRC2	B1

2.49

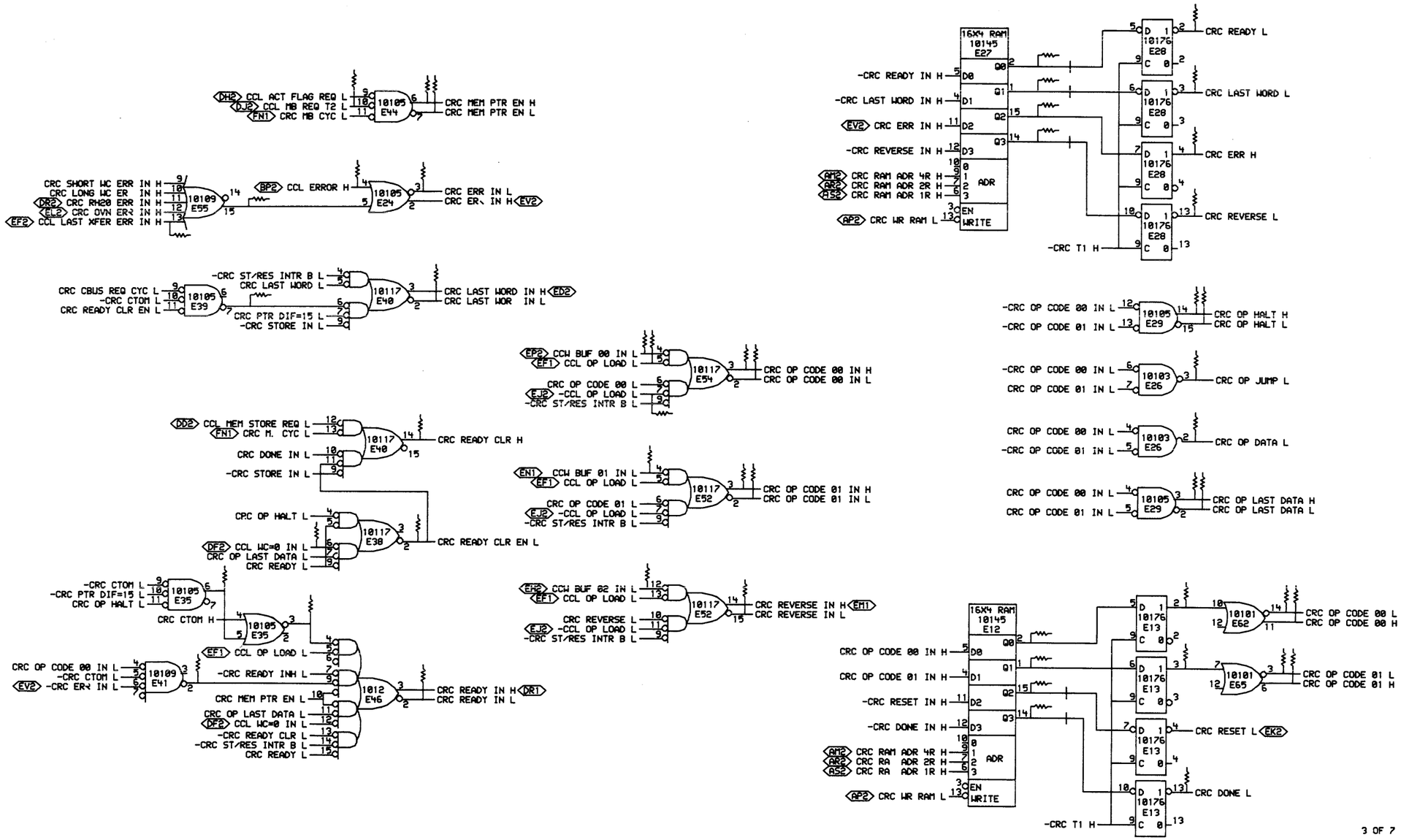

"THIS DRAWING AND SPECIFICATIONS, HEREIN, A E THE PROPERTY OF DIGITAL EQUIPMENT CORPORATION AND SHALL NOT BE REPRODUCED OR COPIED OR USED IN WHOLE OR IN PART A THE BASIS FOR THE MA UFACTURE OR SALE OF ITEMS WITHOUT WRITTEN PERMISSION. COPYRIGHT © 1976, DIGITAL EQUIPMENT CORPORATION"

REVISIONS			CHK	CHANGE NO.	REV.
CHK	CHANGE NO.	REV		M8535-00038	B1
	M8535-00032	B	RO Brown	H777	
			M SCHWARTZ		

digital

DRN.	DATE 22-JUN-76	ENG.	DATE 6/21/76
CHK'D.	DATE	BOARD LOCATION: 4AF10 SHEET 1 OF 1	
CRC3EX.DRW[4,477]	26-MAY-76 13:12	NEXT HIGHER ASSEMBLY:	
FIRST USED ON OPTION/MODEL: KL10		B-DD-M8535-0	

TITLE: CHANNEL RAM CONTROL

SIZE	CODE	NUMBER	REV.
D	CS	M8535-0-CRC3	B1

250

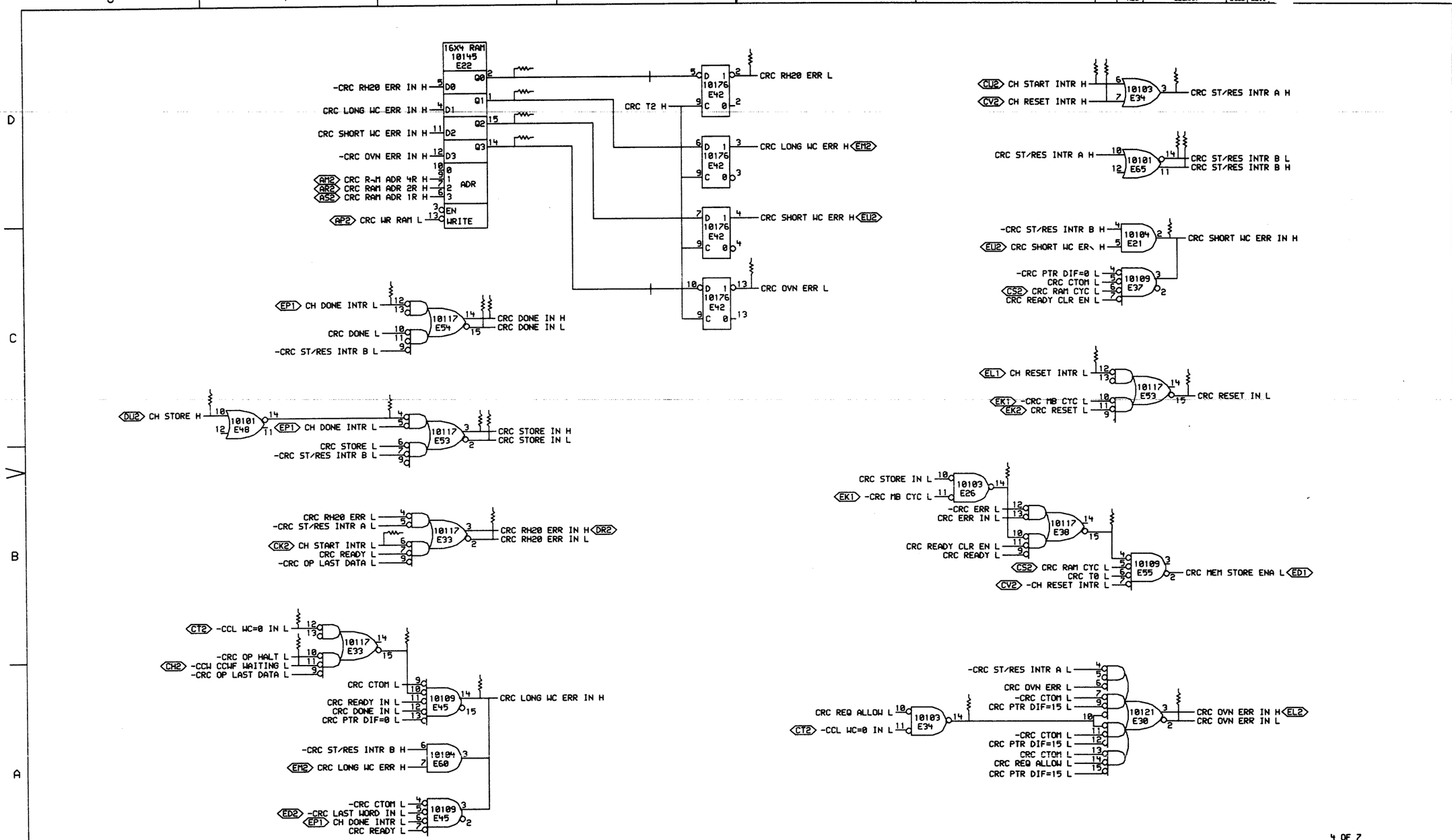

4 OF 7

"THIS DRAWING A D SPECIFICATIONS, HEREIN, ARE THE PROPERTY OF DIGITAL EQUIPMENT CORPORATION AND SHALL NOT BE REPRODUCED OR COPIED OR USED IN WHOLE OR IN PART A THE BASIS FOR THE MA UFACTURE OR SALE OF ITEMS WITHOUT WRITTEN PERMISSION.
COPYRIGHT © 1976, DIGITAL EQUIPMENT CORPOR TION"

REVISIONS			CHK	CHANGE NO.	REV
CHK	CHANGE NO.	REV		M8535-00003	B1
				M SCHWARTZ	

digital

DRN.	DATE 22-JUN-76	ENG.	DATE 6/11/76	TITLE: CHANNEL RAM CONTROL
CHK'D.	DATE	BOARD LOCATION: 4AF10		
		SHEET 1 OF 1		
CRC4EX DRW[4,477]	26-MAY-76 13:13	NEXT HIGHER ASSEMBLY:		
FIRST USED ON OPTION/MODEL: KL10		B-DD-M8535-0		

SIZE	CODE	NUMBER	REV.
D	CS	M8535-0-CRC4	B1

251

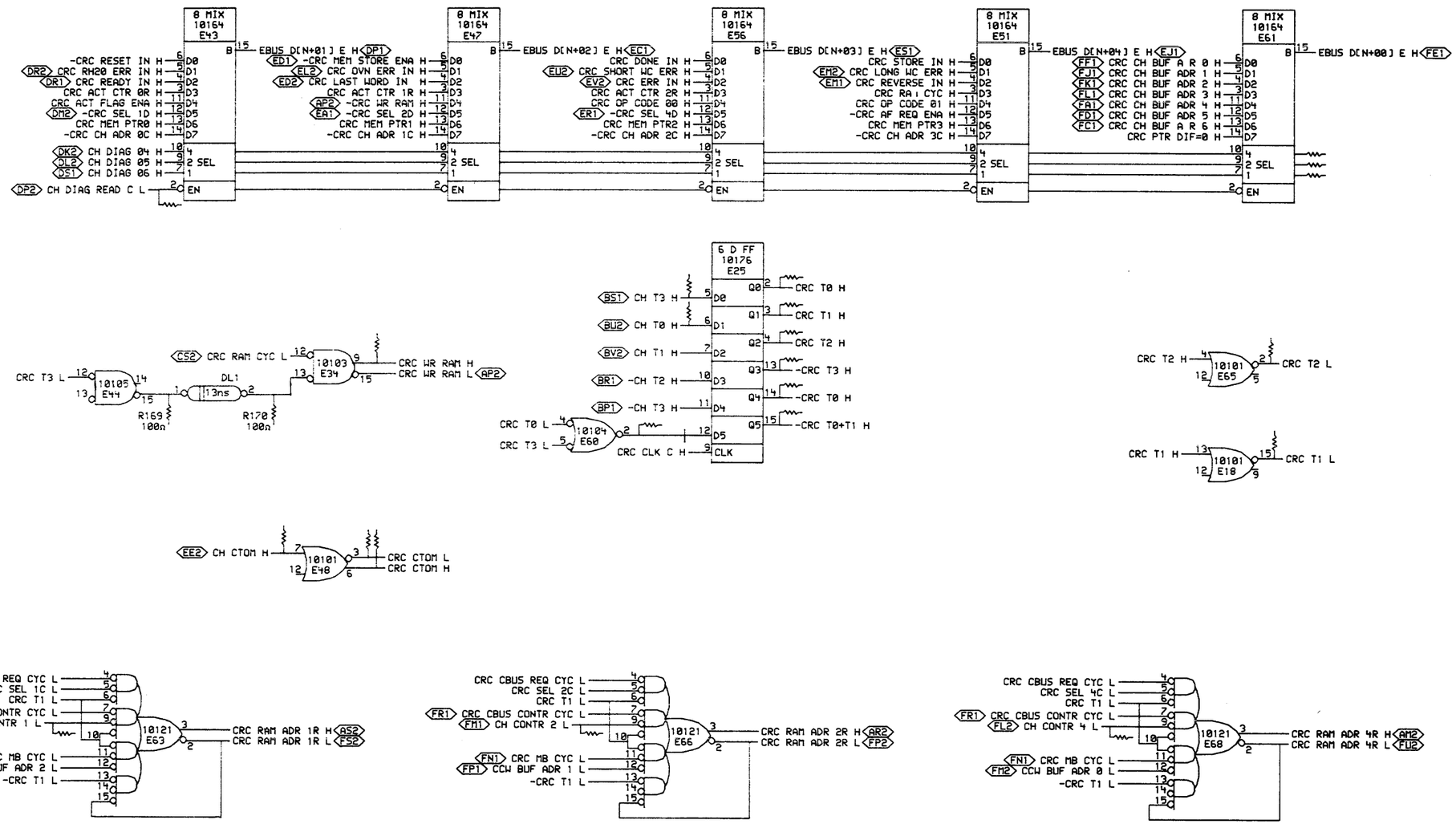

5 OF 7

"THIS DRAWING A D SPECIFICATIONS, HEREIN, A E THE PROPERTY OF DIGITAL EQUIPMENT CORPORATION A D SHALL NOT BE REPRODUCED OR COPIED OR USED IN WHOLE OR IN PART A THE BA IS FOR THE MANUFACTURE OR SALE OF ITEM" WITHOUT WRITTEN PERMISSION.
COPYRIGHT © 1976, DIGITAL EQUIPMENT CORPORATION"

REVISIONS			CHK	CHANGE NO.	REV
CHK	CHANGE NO.	REV		M8535-00003	E
	M8535-00002	B			
	M.SCHWAB			M.SCHWARTZ	

digital

DRN. | DATE 12-AUG-76 | ENG. | DATE
CHK'D. | DATE | BOARD LOCATION: 4AF10 | SHEET 1 OF 1
CRC5EX.DRW[4,477] 28-MAY-76 13:27 | NEXT HIGHER ASSEMBLY:
FIRST USED ON OPTION/MODEL: KL10

TITLE: CHANNEL RAM CONTROL

SIZE	CODE	NUMBER	REV.
D	CS	M8535-0-CRC5	B1

SIZE D | CODE CS | NUMBER M8535-0-CRC5 | REV. B1

252

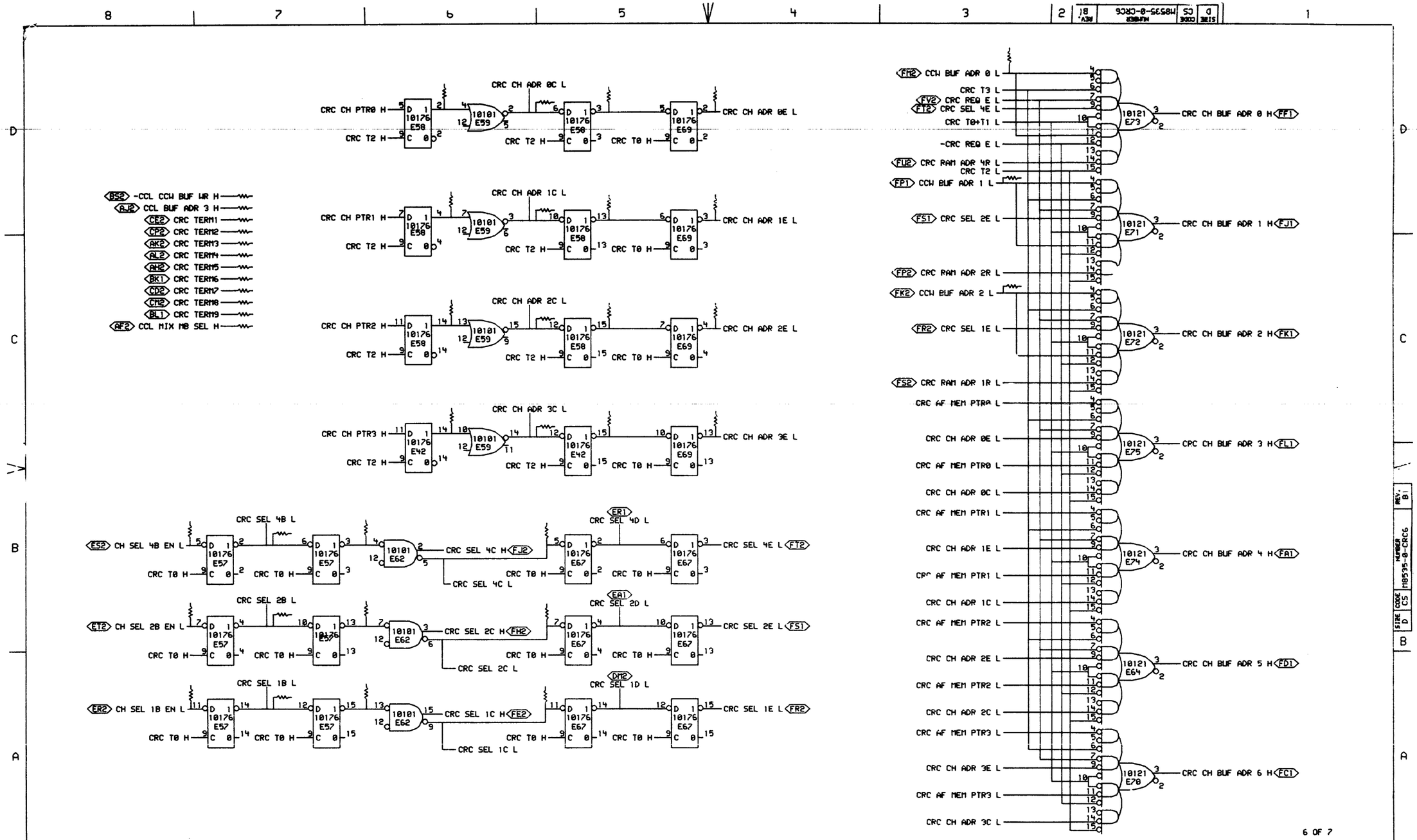

"THIS DRAWING AND SPECIFICATIONS, HEREIN, ARE THE PROPERTY OF DIGITAL EQUIPMENT CORPORATION AND SHALL NOT BE REPRODUCED OR COPIED OR USED IN WHOLE OR IN PART AS THE BASIS FOR THE MANUFACTURE OR SALE OF ITEMS WITHOUT WRITTEN PERMISSION.
COPYRIGHT © 1976, DIGITAL EQUIPMENT CORPORATION"

REVISIONS			CHK	CHANGE NO.	REV.
CHK	CHANGE NO.	REV		M8535-00003	B1
	M8535-00003	B			
	M8535-00003	A	M SCHWARTZ		

digital

DRWN.	DATE 26-MAY-76	ENG.	DATE 6/22/76
CHK TO.	DATE 5/26/76	BOARD LOCATION: 4RE10	
CRCSEX.DRW[4,477] 26-MAY-76 13:15		SHEET 1 OF 1	
FIRST USED ON OPTION/MODEL: KL10		NEXT HIGHER ASSEMBLY: B-DD-M8535-0	

TITLE: CHANNEL RAM CONTROL

SIZE	CODE	NUMBER	REV.
D	CS	M8535-0-CRC6	B1

253

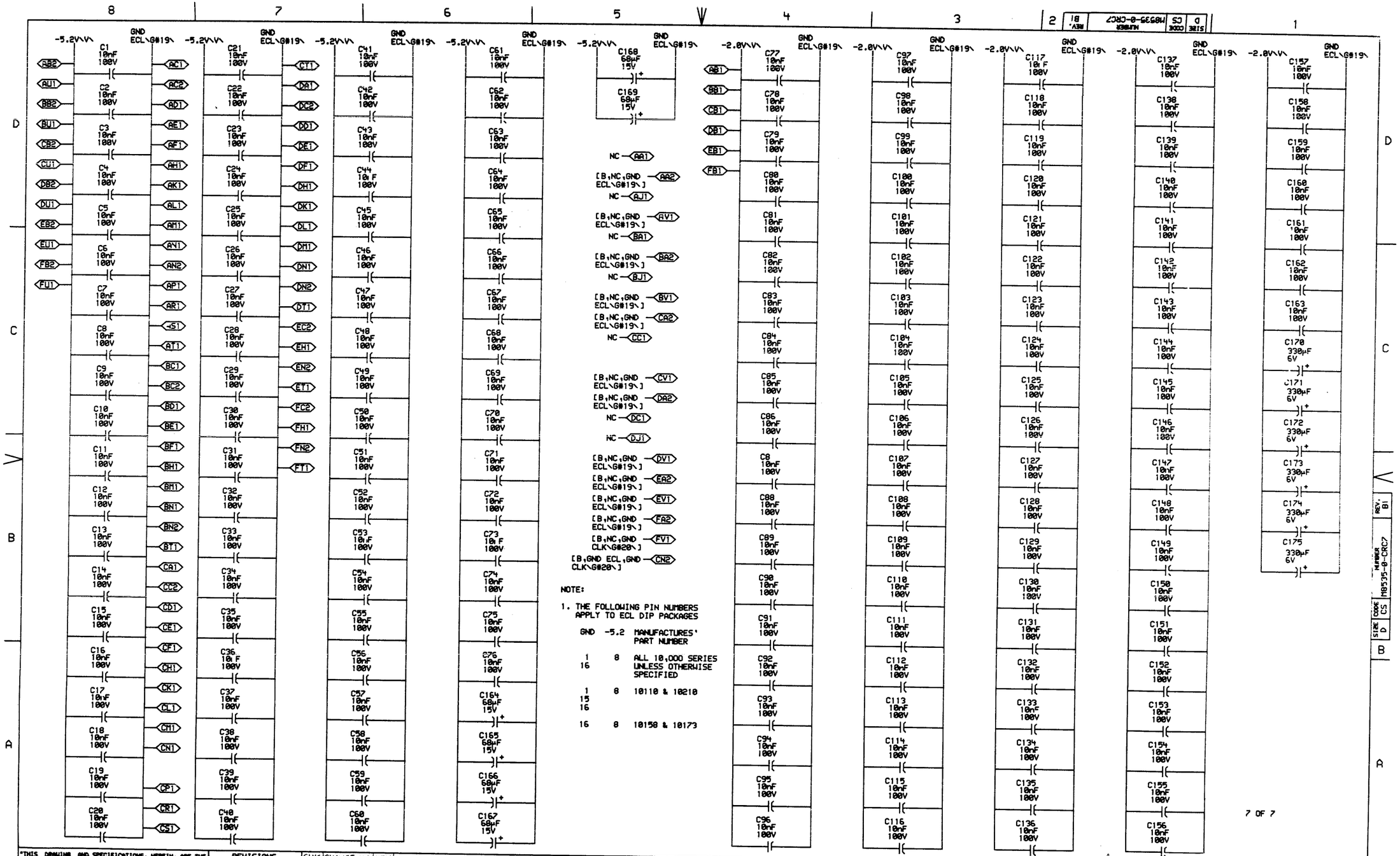
-5.2V\\
-2.0V\\
GND ECL\G#19\
AB2
AU1
BB2
BU1
CB2
CU1
DB2
DU1
EB2
EU1
FB2
FU1
AB1
BB1
CB1
DB1
EB1
FB1
AC1
AC2
AD1
AE1
AF1
AH1
AK1
AL1
AM1
AN1
AN2
AP1
AR1
AS1
AT1
BC1
BC2
BD1
BE1
BF1
BH1
BM1
BN1
BN2
BT1
CA1
CC2
CD1
CE1
CF1
CH1
CK1
CL1
CM1
CN1
CP1
CR1
CS1
CT1
DA1
DC2
DD1
DE1
DF1
DH1
DK1
DL1
DM1
DN1
DN2
DT1
EC2
EH1
EN2
ET1
FC2
FH1
FN2
FT1
NC — AA1
[B,NC,GND ECL\G#19\] — AA2
NC — AJ1
[B,NC,GND ECL\G#19\] — AV1
NC — BA1
[B,NC,GND ECL\G#19\] — BA2
NC — BJ1
[B,NC,GND ECL\G#19\] — BV1
[B,NC,GND ECL\G#19\] — CA2
NC — CC1
[B,NC,GND ECL\G#19\] — CV1
[B,NC,GND ECL\G#19\] — DA2
NC — DC1
NC — DJ1
[B,NC,GND ECL\G#19\] — DV1
[B,NC,GND ECL\G#19\] — EA2
[B,NC,GND ECL\G#19\] — EV1
[B,NC,GND ECL\G#19\] — FA2
[B,NC,GND ECL\G#19\] — FV1
[B,GND ECL,GND CLK\G#20\] — CN2
NOTE:
1. THE FOLLOWING PIN NUMBERS APPLY TO ECL DIP PACKAGES
GND -5.2 MANUFACTURES' PART NUMBER
1 16 8 ALL 10,000 SERIES UNLESS OTHERWISE SPECIFIED
1 15 16 8 10110 & 10210
16 8 10158 & 10173
7 OF 7
SIZE D CODE CS NUMBER M8535-0-CRC7 REV. B1
REV. B1
NUMBER M8535-0-CRC7
SIZE D CODE CS
"THIS DRAWING AND SPECIFICATIONS, HEREIN, ARE THE PROPERTY OF DIGITAL EQUIPMENT CORPORATION AND SHALL NOT BE REPRODUCED OR COPIED OR USED IN WHOLE OR IN PART A THE BA IS FOR THE MANUFACTURE OR SALE OF ITEMS WITHOUT WRITTEN PERMISSION.
COPYRIGHT © 1976, DIGITAL EQUIPMENT CORPORATION"
REVISIONS
CHK CHANGE NO. REV
- M8535-00002 A
CHK CHANGE NO. REV
M8535-00003 B1
digital
DRN. D. Lemay DATE 22-JUN-76
CHK'D. DATE
ENG. DATE 6/11/76
BOARD LOCATION: 4AF10
SHEET 1 OF 1
CRC7EX.DRW[4,477] 22-JUN-76 09:22
NEXT HIGHER ASSEMBLY: B-DD-M8535-0
FIRST USED ON OPTION/MODEL: KL10
TITLE: CHANNEL RAM CNTRL PWR, GND, AND CAPS
SIZE D CODE CS NUMBER M8535-0-CRC7 REV. B1

254

RESISTOR LOC(PIN)	SHOWN DRW#	ON REF	VALUE	TERMINATES SIGNAL
R60(1)	CRC1	A7	68n	%E1(2)
R62(1)	CRC1	A7	68n	%E1(3)
R116(1)	CRC1	B7	68n	%E1(6)
R114(1)	CRC1	A7	68n	%E1(7)
R195(1)	CRC1	D4	68n	%E11(14)
R194(1)	CRC1	D4	68n	%E11(15)
R202(1)	CRC1	D4	68n	%E11(2)
R203(1)	CRC1	D4	68n	%E11(3)
R68(1)	CRC3	B3	68n	%E12(1)
R66(1)	CRC3	A3	68n	%E12(14)
R67(1)	CRC3	A3	68n	%E12(15)
R69(1)	CRC3	B3	68n	%E12(2)
R183(1)	CRC3	B2	68n	%E13(2)
R53(1)	CRC3	A2	68n	%E13(3)
R45(1)	CRC2	C7	68n	%E14(14)
R48(1)	CRC2	C7	68n	%E14(15)
R72(1)	CRC2	A7	68n	%E17(1)
R64(1)	CRC2	A7	68n	%E17(14)
R65(1)	CRC2	A7	68n	%E17(15)
R73(1)	CRC2	A7	68n	%E17(2)
R3(1)	CRC1	A4	68n	%E19(1)
R1(1)	CRC1	A4	68n	%E19(15)
R2(1)	CRC1	A4	68n	%E19(2)
R156(1)	CRC1	C4	68n	%E2(2)
R154(1)	CRC1	C4	68n	%E2(3)
R159(1)	CRC1	C4	68n	%E2(6)
R157(1)	CRC1	C4	68n	%E2(7)
R163(1)	CRC1	D5	68n	%E21(14)
R162(1)	CRC1	D5	68n	%E21(3)
R40(1)	CRC4	D6	68n	%E22(1)
R34(1)	CRC4	D6	68n	%E22(14)
R39(1)	CRC4	D6	68n	%E22(15)
R38(1)	CRC4	D6	68n	%E22(2)
R260(1)	CRC4	B3	68n	%E26(14)
R80(1)	CRC3	D3	68n	%E27(1)
R77(1)	CRC3	D3	68n	%E27(14)
R82(1)	CRC3	D3	68n	%E27(15)
R81(1)	CRC3	D3	68n	%E27(2)
R43(1)	CRC2	C7	68n	%E29(7)
R265(1)	CRC2	B7	68n	%E31(14)

RESISTOR LOC(PIN)	SHOWN DRW#	ON REF	VALUE	TERMINATES SIGNAL
R91(1)	CRC4	B6	68n	%E33(15)
R170(1)	CRC5	C6	100n	%E34(13)
R212(1)	CRC4	A3	68n	%E34(14)
R83(1)	CRC2	C7	68n	%E35(15)
R252(1)	CRC3	B6	68n	%E35(3)
R254(1)	CRC3	B7	68n	%E35(6)
R50(1)	CRC4	B2	68n	%E38(15)
R132(1)	CRC3	C7	68n	%E39(7)
R139(1)	CRC1	B3	68n	%E4(5)
R92(1)	CRC2	D5	68n	%E41(15)
R257(1)	CRC3	A7	68n	%E41(2)
R99(1)	CRC6	C6	68n	%E42(14)
R107(1)	CRC6	C5	68n	%E42(15)
R169(1)	CRC5	C7	100n	%E44(15)
R155(1)	CRC1	B3	68n	%E44(2)
R142(1)	CRC4	C6	68n	%E48(14)
R19(1)	CRC3	C7	68n	%E55(15)
R184(1)	CRC6	B6	68n	%E57(13)
R181(1)	CRC6	A6	68n	%E57(15)
R180(1)	CRC6	B6	68n	%E57(3)
R111(1)	CRC6	D5	68n	%E58(13)
R95(1)	CRC6	C6	68n	%E58(14)
R110(1)	CRC6	C5	68n	%E58(15)
R100(1)	CRC6	D6	66n	%E58(2)
R109(1)	CRC6	D5	68n	%E58(3)
R101(1)	CRC6	D6	68n	%E58(4)
R49(1)	CRC2	B2	68n	%E60(14)
R208(1)	CRC5	C5	68n	%E60(2)
R102(1)	CRC2	B5	68n	%E65(9)
R70(1)	CRC2	A2	68n	%E8(14)
R71(1)	CRC2	A2	68n	%E8(15)
R75(1)	CRC2	A2	68n	%E8(2)
R74(1)	CRC2	B2	68n	%E8(3)
R199(1)	CRC6	D7	68n	CCL BUF ADR 3 H
R211(1)	CRC6	D7	68n	-CCL CCW BUF WR H
R258(1)	CRC2	D7	68n	CCL CCWF CLR H
R18(1)	CRC3	C6	68n	CCL ERROR H
R46(1)	CRC3	C7	68n	CCL LAST XFER ERR IN H
R12(1)	CRC2	C2	68n	CCL LOAD AC H
R160(1)	CRC2	D2	68n	-CCL LOAD AC H

RESISTOR LOC(PIN)	SHOWN DRW#	ON REF	VALUE	TERMINATES SIGNAL
R135(1)	CRC3	D6	68n	-CCL MB REQ T2 H
R193(1)	CRC6	C7	68n	CCL MIX MB SEL H
R97(1)	CRC3	C5	68n	CCL OP LOAD H
R78(1)	CRC3	C5	68n	-CCL OP LOAD H
R4(1)	CRC2	C7	66n	-CCL RAM REQ H
R63(1)	CRC2	A3	66n	-CCL REQ CTR EN H
R23(1)	CRC4	B7	66n	CCL WC=0 IN H
R87(1)	CRC3	B6	66n	-CCL WC=0 IN H
R205(1)	CRC2	D2	66n	-CCW ACT CTR 0 EN H
R161(1)	CRC2	C2	66n	-CCW ACT CTR 1 EN H
R201(1)	CRC2	B2	66n	-CCW ACT CTR 2 EN H
R96(1)	CRC3	C5	68n	-CCW BUF 00 IN H
R174(1)	CRC3	B5	68n	-CCW BUF 01 IN H
R171(1)	CRC3	B5	66n	-CCW BUF 02 IN H
R151(1)	CRC6	D3	68n	-CCW BUF ADR 0 H
R248(1)	CRC6	D3	68n	-CCW BUF ADR 1 H
R185(1)	CRC6	C3	66n	-CCW BUF ADR 2 H
R24(1)	CRC4	B7	66n	CCW CCWF WAITING H
R21(1)	CRC2	C7	66n	CH CBUS REQ H
R42(1)	CRC2	C7	66n	-CH CBUS REQ H
R149(1)	CRC5	A7	66n	-CH CONTR 1 H
R250(1)	CRC5	A5	66n	-CH CONTR 2 H
R150(1)	CRC5	A2	66n	-CH CONTR 4 H
R5(1)	CRC2	C8	66n	CH CONTR REQ H
R22(1)	CRC2	C7	66n	-CH CONTR REQ H
R140(1)	CRC5	B6	66n	CH CTOM H
R246(1)	CRC5	D2	66n	CH DIAG 04 H
R247(1)	CRC5	D2	68n	CH DIAG 05 H
R245(1)	CRC5	D2	68n	CH DIAG 06 H
R243(1)	CRC5	C7	66n	-CH DIAG READ C H
R93(1)	CRC4	C6	66n	-CH DONE INTR H
R6(1)	CRC2	C7	66n	CH MR RESET B H
R52(1)	CRC2	B6	66n	-CH REQ D H
R263(1)	CRC4	D2	68n	CH RESET INTR H
R138(1)	CRC4	C2	68n	-CH RESET INTR H
R176(1)	CRC6	A7	68n	-CH SEL 1B EN H
R182(1)	CRC6	B7	68n	-CH SEL 2B EN H
R178(1)	CRC6	B7	68n	-CH SEL 4B EN H
R85(1)	CRC2	D7	66n	-CH START H
R225(1)	CRC4	D2	66n	CH START INTR H

RESISTOR LOC(PIN)	SHOWN DRW#	ON REF	VALUE	TERMINATES SIGNAL
R30(1)	CRC4	B6	68n	-CH START INTR H
R137(1)	CRC4	C7	68n	CH STORE H
R264(1)	CRC5	C4	68n	CH T0 H
R214(1)	CRC5	C4	68n	CH T3 H
R130(1)	CRC1	B2	68n	CLK CRC H
R15(1)	CRC2	D1	68n	CRC ACT CTR 0 IN H
R230(1)	CRC2	A5	68n	CRC ACT CTR 0R H
R209(1)	CRC2	A5	68n	-CRC ACT CTR 0R H
R14(1)	CRC2	C1	68n	CRC ACT CTR 1 IN H
R233(1)	CRC2	A5	68n	CRC ACT CTR 1R H
R166(1)	CRC2	A5	68n	-CRC ACT CTR 1R H
R7(1)	CRC2	C1	68n	CRC ACT CTR 2 IN H
R240(1)	CRC2	A5	68n	CRC ACT CTR 2R H
R228(1)	CRC1	D7	68n	CRC ACT FLAG ALLOW H
R229(1)	CRC1	D7	68n	CRC ACT FLAG ENA H
R57(1)	CRC2	B2	68n	-CRC AF MEM PTR0 H
R112(1)	CRC2	A2	68n	-CRC AF MEM PTR1 H
R104(1)	CRC2	A2	68n	-CRC AF MEM PTR2 H
R55(1)	CRC2	A2	68n	-CRC AF MEM PTR3 H
R88(1)	CRC1	B3	68n	-CRC AF REQ ENA H
R217(1)	CRC2	C6	68n	-CRC CBUS REQ CYC H
R227(1)	CRC6	D5	68n	-CRC CH ADR 0C H
R56(1)	CRC6	D4	68n	-CRC CH ADR 0E H
R108(1)	CRC6	D5	68n	-CRC CH ADR 1C H
R113(1)	CRC6	D4	68n	-CRC CH ADR 1E H
R237(1)	CRC6	C5	68n	-CRC CH ADR 2C H
R106(1)	CRC6	C4	68n	-CRC CH ADR 2E H
R232(1)	CRC6	C5	68n	-CRC CH ADR 3C H
R54(1)	CRC6	C4	68n	-CRC CH ADR 3E H
R196(1)	CRC1	C3	68n	CRC CH PTR PLUS H
R145(1)	CRC1	D2	68n	CRC CH PTR0 H
R191(1)	CRC1	D3	68n	CRC CH PTR0 IN H
R146(1)	CRC1	D2	68n	CRC CH PTR1 H
R189(1)	CRC1	D3	68n	CRC CH PTR1 IN H
R141(1)	CRC1	D2	68n	CRC CH PTR2 H
R188(1)	CRC1	D3	68n	CRC CH PTR2 IN H
R31(1)	CRC1	D2	68n	CRC CH PTR3 H
R186(1)	CRC1	D3	68n	CRC CH PTR3 IN H
R47(1)	CRC1	B2	68n	CRC CLK A H
R58(1)	CRC1	B2	68n	CRC CLK B H

NOTE:

1. ALL TERMINATORS HAVE PIN TWO CONNECTED TO -2.0V AND ARE 5% 1/4WATT UNLESS OTHERWISE SPECIFIED
2. ENTRIES ARE SORTED BY SIGNAL NAME
3. % INDICATES OUTPUT OF DIP LOC AND ( ) INDICATES PIN NUMBER

"THIS DRAWING AND SPECIFICATIONS, HEREIN, ARE THE PROPERTY OF DIGITAL EQUIPMENT CORPORATION AND SHALL NOT BE REPRODUCED OR COPIED OR USED IN WHOLE OR IN PART AS THE BASIS FOR THE MANUFACTURE OR SALE OF ITEMS WITHOUT WRITTEN PERMISSION. COPYRIGHT © 1976, DIGITAL EQUIPMENT CORPORATION"

REVISIONS			CHK	CHANGE NO	REV
CHK	CHANGE NO.	REV		M8535-00003	B1
-	M8535-00002	B			

M8535.DRW(4,4773) 27-MAY-76 08:18

FIRST USED ON OPTION/MODEL: KL10

DRN. C Smith 27-MAY-76 | ENG. DATE 6/16/76 | TITLE: CHANNEL RAM TERMINATORS

CHK. 5/27/76 | BOARD LOCATION: SHEET 1 OF 2 | NEXT HIGHER ASSEMBLY: B-DD-M8535-0

SIZE	CODE	NUMBER	REV.
D	CS	M8535-0-RES	B1

255

RESISTOR LOC(PIN)	SHOWN ON DRW#	REF	VALUE	TERMINATES SIGNAL
R210(1)	CRC1	B2	68Ω	CRC CLK C H
R253(1)	CRC5	B6	68Ω	CRC CTOM H
R187(1)	CRC5	B6	68Ω	-CRC CTOM H
R94(1)	CRC3	A2	68Ω	-CRC DONE H
R241(1)	CRC4	C6	68Ω	CRC DONE IN H
R119(1)	CRC4	C6	68Ω	-CRC DONE IN H
R167(1)	CRC2	D4	68Ω	CRC DONE LOAD AC H
R200(1)	CRC2	D4	68Ω	-CRC DONE LOAD AC H
R89(1)	CRC3	D2	68Ω	CRC ERR H
R28(1)	CRC3	C6	68Ω	-CRC ERR IN H
R133(1)	CRC3	D2	68Ω	-CRC LAST WORD H
R128(1)	CRC3	C6	68Ω	-CRC LAST WORD IN H
R124(1)	CRC4	A6	68Ω	CRC LONG WC ERR IN H
R84(1)	CRC2	D6	68Ω	-CRC MB CYC T3 H
R136(1)	CRC3	D6	68Ω	CRC MEM PTR EN H
R41(1)	CRC3	D6	68Ω	-CRC MEM PTR EN H
R226(1)	CRC1	C2	68Ω	CRC MEM PTR0 H
R117(1)	CRC1	C3	68Ω	CRC MEM PTR0 IN H
R231(1)	CRC1	C2	68Ω	CRC MEM PTR1 H
R118(1)	CRC1	C3	68Ω	CRC MEM PTR1 IN H
R236(1)	CRC1	C2	68Ω	CRC MEM PTR2 H
R61(1)	CRC1	C3	68Ω	CRC MEM PTR2 IN H
R234(1)	CRC1	C2	68Ω	CRC MEM PTR3 H
R59(1)	CRC1	C3	68Ω	CRC MEM PTR3 IN H
R239(1)	CRC3	B1	68Ω	CRC OP CODE 00 H
R98(1)	CRC3	B1	68Ω	-CRC OP CODE 00 H
R121(1)	CRC3	C4	68Ω	CRC OP CODE 00 IN H
R168(1)	CRC3	C4	68Ω	-CRC OP CODE 00 IN H
R235(1)	CRC3	A1	68Ω	CRC OP CODE 01 H
R175(1)	CRC3	A1	68Ω	-CRC OP CODE 01 H
R20(1)	CRC3	B4	68Ω	CRC OP CODE 01 IN H
R25(1)	CRC3	B4	68Ω	-CRC OP CODE 01 IN H
R259(1)	CRC3	B2	68Ω	-CRC OP DATA H
R26(1)	CRC3	C2	68Ω	CRC OP HALT H
R256(1)	CRC3	C2	68Ω	-CRC OP HALT H
R79(1)	CRC3	C2	68Ω	-CRC OP JUMP H
R27(1)	CRC3	B2	68Ω	CRC OP LAST DATA H
R35(1)	CRC3	B2	68Ω	-CRC OP LAST DATA H
R220(1)	CRC4	C4	68Ω	-CRC OVN ERR H
R122(1)	CRC4	A2	68Ω	-CRC OVN ERR IN H

RESISTOR LOC(PIN)	SHOWN ON DRW#	REF	VALUE	TERMINATES SIGNAL
R8(1)	CRC1	B6	68Ω	CRC PTR DIF0 H
R16(1)	CRC1	C7	68Ω	-CRC PTR DIF0 H
R9(1)	CRC1	A6	68Ω	CRC PTR DIF1 H
R17(1)	CRC1	B7	68Ω	-CRC PTR DIF1 H
R11(1)	CRC1	A6	68Ω	CRC PTR DIF2 H
R164(1)	CRC1	B7	68Ω	-CRC PTR DIF2 H
R10(1)	CRC1	A6	68Ω	CRC PTR DIF3 H
R204(1)	CRC1	B7	68Ω	-CRC PTR DIF3 H
R244(1)	CRC1	C7	68Ω	CRC PTR DIF=0 H
R90(1)	CRC1	C7	68Ω	-CRC PTR DIF=0 H
R255(1)	CRC1	C7	68Ω	CRC PTR DIF=15 H
R134(1)	CRC1	C7	68Ω	-CRC PTR DIF=15 H
R158(1)	CRC1	C7	68Ω	CRC PTR LATCH H
R238(1)	CRC2	B1	68Ω	CRC RAM CYC H
R223(1)	CRC3	D2	68Ω	-CRC READY H
R36(1)	CRC3	B6	68Ω	CRC READY CLR H
R222(1)	CRC3	B6	68Ω	-CRC READY CLR EN H
R129(1)	CRC3	A6	68Ω	-CRC READY IN H
R44(1)	CRC1	D7	68Ω	CRC READY INH H
R13(1)	CRC1	D7	68Ω	-CRC READY INH H
R165(1)	CRC1	C4	68Ω	-CRC REQ ALLOW H
R262(1)	CRC2	B4	68Ω	CRC REQ E H
R120(1)	CRC4	C2	68Ω	-CRC RESET IN H
R172(1)	CRC3	C2	68Ω	-CRC REVERSE H
R126(1)	CRC3	B4	68Ω	-CRC REVERSE IN H
R29(1)	CRC4	D4	68Ω	-CRC RH20 ERR H
R127(1)	CRC4	B6	68Ω	-CRC RH20 ERR IN H
R173(1)	CRC6	A7	68Ω	-CRC SEL 1B H
R148(1)	CRC6	A5	68Ω	-CRC SEL 1C H
R177(1)	CRC6	B7	68Ω	-CRC SEL 2B H
R249(1)	CRC6	B5	68Ω	-CRC SEL 2C H
R179(1)	CRC6	B7	68Ω	-CRC SEL 4B H
R152(1)	CRC6	B5	68Ω	-CRC SEL 4C H
R125(1)	CRC4	C2	68Ω	CRC SHORT WC ERR IN H
R115(1)	CRC4	D2	68Ω	CRC ST/RES INTR A H
R37(1)	CRC4	D2	68Ω	CRC ST/RES INTR B H
R153(1)	CRC4	D2	68Ω	-CRC ST/RES INTR B H
R143(1)	CRC2	B6	68Ω	-CRC STORE H
R131(1)	CRC4	C6	68Ω	CRC STORE IN H
R123(1)	CRC4	C6	68Ω	-CRC STORE IN H

RESISTOR LOC(PIN)	SHOWN ON DRW#	REF	VALUE	TERMINATES SIGNAL
R147(1)	CRC5	C4	68Ω	CRC T0 H
R51(1)	CRC5	C4	68Ω	-CRC T0 H
R105(1)	CRC5	C4	68Ω	-CRC T0+T1 H
R242(1)	CRC5	C4	68Ω	CRC T1 H
R261(1)	CRC5	C2	68Ω	-CRC T1 H
R144(1)	CRC5	C4	68Ω	CRC T2 H
R86(1)	CRC5	C2	68Ω	-CRC T2 H
R251(1)	CRC5	C4	68Ω	-CRC T3 H
R215(1)	CRC6	D7	68Ω	CRC TERM1
R218(1)	CRC6	C7	68Ω	CRC TERM2
R198(1)	CRC6	C7	68Ω	CRC TERM3
R197(1)	CRC6	C7	68Ω	CRC TERM4
R192(1)	CRC6	C7	68Ω	CRC TERM5
R207(1)	CRC6	C7	68Ω	CRC TERM6
R216(1)	CRC6	C7	68Ω	CRC TERM7
R219(1)	CRC6	C7	68Ω	CRC TERM8
R206(1)	CRC6	C7	68Ω	CRC TERM9
R221(1)	CRC5	C6	68Ω	CRC WR RAM H

NOTE:

1. ALL TERMINATORS HAVE PIN TWO CONNECTED TO -2.0V AND ARE 5% 1/4WATT UNLESS OTHERWISE SPECIFIED
2. ENTRIES ARE SORTED BY SIGNAL NAME
3. % INDICATES OUTPUT OF DIP LOC AND ( ) INDICATES PIN NUMBER

"THIS DRAWING AND SPECIFICATIONS, HEREIN, ARE THE PROPERTY OF DIGITAL EQUIPMENT CORPORATION AND SHALL NOT BE REPRODUCED OR COPIED OR USED IN WHOLE OR IN PART AS THE BASIS FOR THE MANUFACTURE OR SALE OF ITEMS WITHOUT WRITTEN PERMISSION.
COPYRIGHT © 1976, DIGITAL EQUIPMENT CORPORATION"

REVISIONS
CHK | CHANGE NO.

digital

DRN. C Smith DATE 27-MAY-76 ENG. DATE
CHK. DATE
M8535Z.DRW[4,477] 27-MAY-76 00:11
FIRST USED ON OPTION/MODEL: KL10
BOARD LOCATION:
SHEET 2 OF 2
NEXT HIGHER ASSEMBLY: B-DD-M8535-0

TITLE: CHANNEL RAM TERMINATORS

SIZE	CODE	NUMBER	REV.
D	CS	M8535-0-RES	B1

256

REVISION CONTROL SHEET

CUSTOMER PRINT SET	MFG SET	DRAWING NO	NO OF SHT	DESCRIPTION	OPTION NO/FILE DATE	REVISIONS			
			-	MODULE REVISION		A	B	C	D
		D-UA-M8535-Ø-Ø	6	CHANNEL RAM CONTROL		-	A	B	C
		D-CS-M8535-Ø-CRC1	1	CHANNEL RAM CONTROL		-	A	B	C
		D-CS-M8535-Ø-CRC2	1	CHANNEL RAM CONTROL		-	A	B	C
		D-CS-M8535-Ø-CRC3	1	CHANNEL RAM CONTROL		-	A	B	C
		D-CS-M8535-Ø-CRC4	1	CHANNEL RAM CONTROL		-	A	B	C
		D-CS-M8535-Ø-CRC5	1	CHANNEL RAM CONTROL		-	A	B	C
		D-CS-M8535-Ø-CRC6	1	CHANNEL RAM CONTROL		-	A	B	C
		D-CS-M8535-Ø-CRC7	1	CHANNEL RAM CONTROL		-	A	B	C
		- - -		PWR, GND, AND CAPS		-			
		D-CS-M8535-Ø-RES	2	CHANNEL RAM CONTROL		–	A	B	C
				TERMINATORS					
		K-CO-M8535-Ø-4	1	CHANNEL RAM CONTROL		B	B	B	C
				(CALDEC DATA BASE)					
		D-AH-M8535-Ø-5	4	CHANNEL RAM CONTROL		A	A	A	B
		B-MH-M8535-Ø-6	1	MODULE ECO HISTORY		-	A	B	C
		5010925	-	ETCH CIRCUIT BOARD		B	B	B	C
		P00-M8535-ØØ		PROCESS SHEET (REF ONLY)					
					ECO NO	ORIG	00001	00002	00003 NEW RELAYOUT VERSION

CUSTOMER PRINT SET CODES
X = PRINT OF DOCUMENT INCLUDED IN PRINT SET
C = INCLUDES ALL PRINTS INDICATED ON DOCUMENT
S = CONFIDENTIAL AUTHORIZED SIGNATURE REQUIRED

TITLE		SIZE	CODE	NUMBER	REV
CHANNEL RAM CONTROL	SHEET 3 OF 3	B	DD	M8535-Ø	C

257

MR

"THIS DRAWING AND SPECIFICATIONS, HEREIN, ARE THE PROPERTY OF DIGITAL EQUIPMENT CORPORATION AND SHALL NOT BE REPRODUCED OR COPIED OR USED IN WHOLE OR IN PART AS THE BASIS FOR THE MANUFACTURE OR SALE OF ITEMS WITHOUT WRITTEN PERMISSION.
COPYRIGHT © 1976 DIGITAL EQUIPMENT CORPORATION"

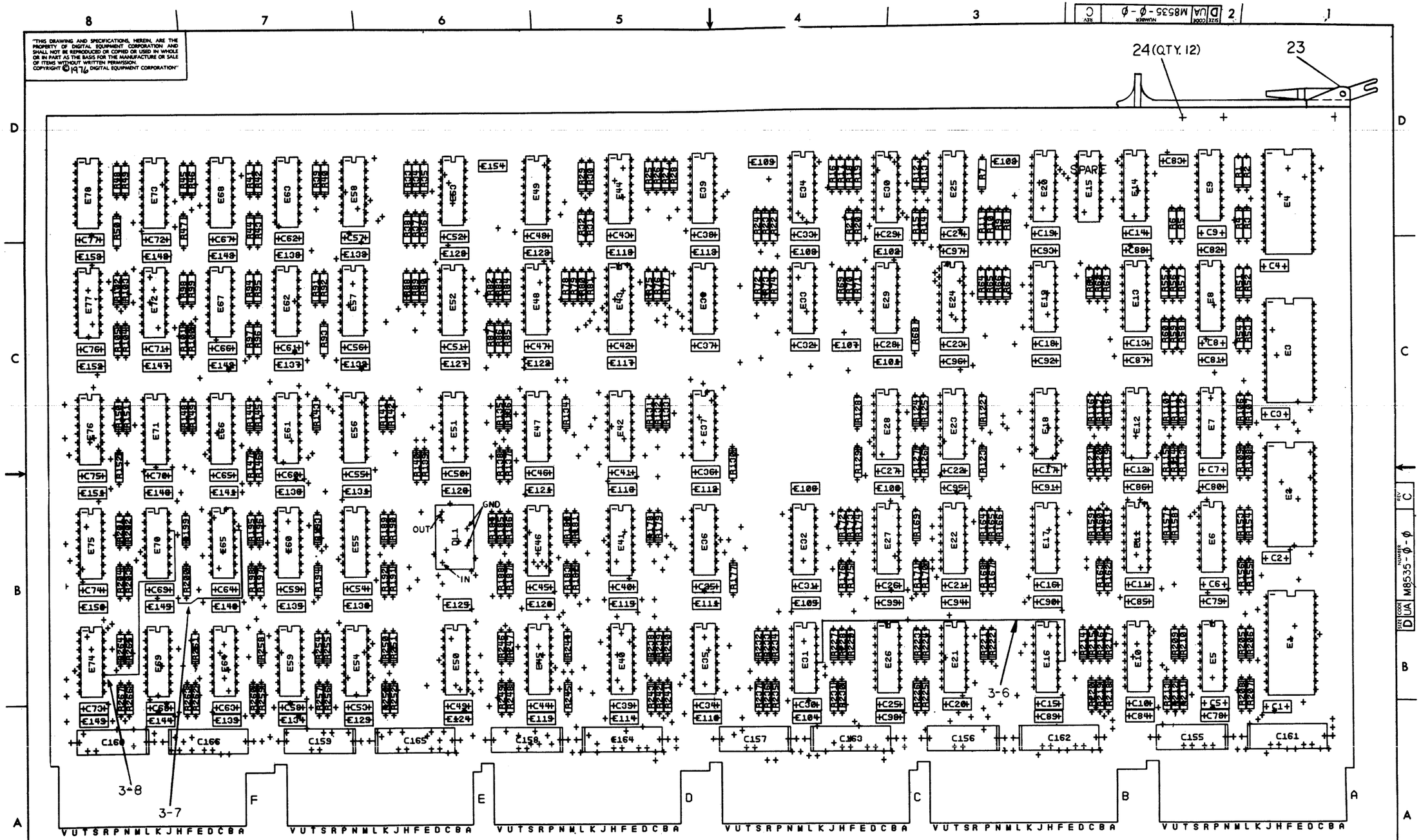

REVISIONS		
CHK	CHANGE NO.	REV.

TITLE	SIZE	CODE	NUMBER	REV.
CHANNEL RAM CONTROL	D	UA	M8535-Ø-Ø	C
SCALE 2/1	SHEET 2 OF 5	DIST.		

MR

258

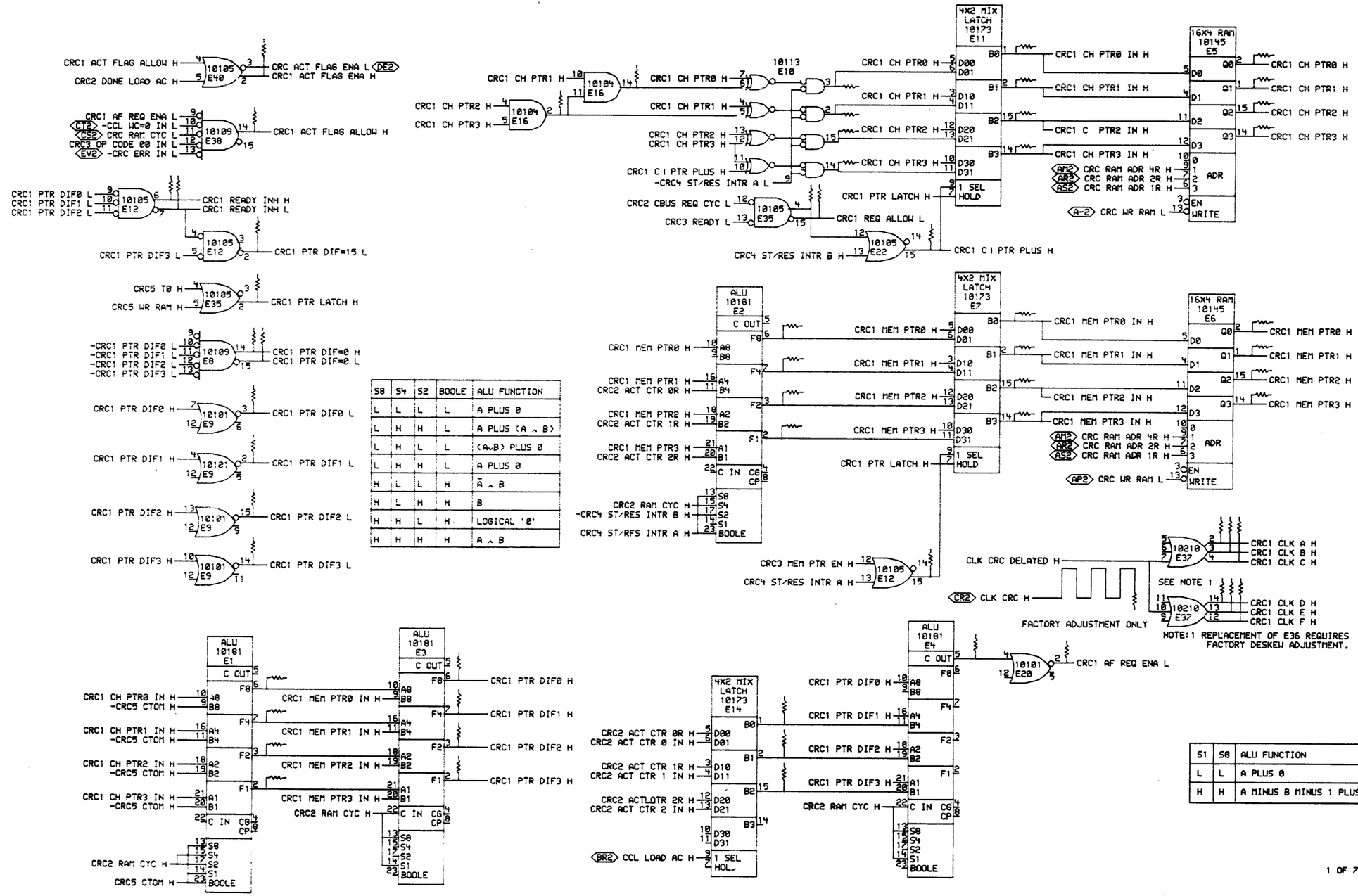

S8	S4	S2	BOOLE	ALU FUNCTION
L	L	L	L	A PLUS 0
L	H	H	L	A PLUS (A ∧ B)
L	H	L	L	(A∨B) PLUS 0
L	H	H	L	A PLUS 0
H	L	L	H	$\bar{A}$ ∧ B
H	L	H	H	B
H	H	L	H	LOGICAL '0'
H	H	H	H	A ∧ B

S1	S0	ALU FUNCTION
L	L	A PLUS 0
H	H	A MINUS B MINUS 1 PLUS C

1 OF 7

"THIS DRAWING AND SPECIFICATIONS, HEREIN, ARE THE PROPERTY OF DIGITAL EQUIPMENT CORPORATION AND SHALL NOT BE REPRODUCED OR COPIED OR USED IN WHOLE OR IN PART AS THE BASIS FOR THE M.UFACTURE OR SALE OF ITEMS WITHOUT WRITTEN PERM SSION. COPYRIGHT © 1976, DIGITAL EQUIPMENT CORPORATION"

REVISIONS		
CHK	CHANGE NO.	REV

digital

CRC1ES.DRW4,1753 13-OCT-76 13:23

FIRST USED ON OPTION/MODEL: KL10

DRN. Toomey DATE 01-NOV-76

CHK'D DATE

ENG. DATE 11/2/76

BOARD LOCATION: 4AF10

SHEET 1 OF 1

NEXT HIGHER ASSEMBLY: B-DD-M8535-0

TITLE: CHANNEL RAM CONTROL

SIZE	CODE	NUMBER	REV.
D	CS	M8535-0-CRC1	C

259

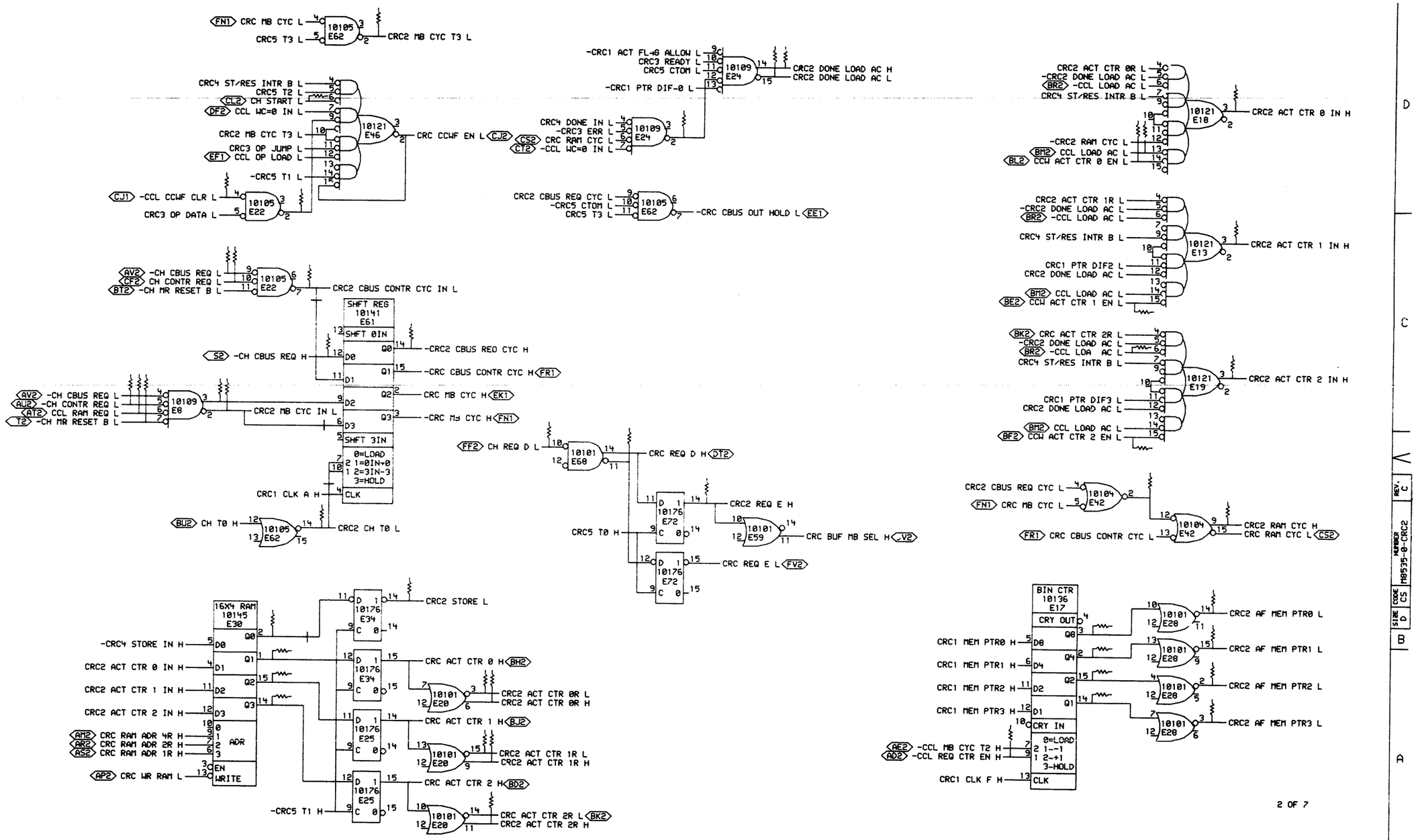

"THIS DRAWING AND SPECIFICATIONS, HEREIN, ARE THE PROPERTY OF DIGITAL EQUIPMENT CORPORATION AND SHALL NOT BE REPRODUCED OR COPIED OR USED IN WHOLE OR IN PART AS THE BAISIS FOR THE MANUFACTURE OR SALE OF ITEMS WITHOUT WRITTEN PERMISSION.
COPYRIGHT © 1976, DIGITAL EQUIPMENT CORPORATION"

REVISIONS		
CHK	CHANGE NO.	REV

digital

DRN. [illegible] DATE 01-NOV-76 ENG. [illegible] DATE [illegible]
CHK [illegible] DATE 11/2/76 BOARD LOCATION: 4AF10
CRC2ES.DRW(4,175) 13-OCT-76 13:24 SHEET 1 OF 1
NEXT HIGHER ASSEMBLY: B-DD-M8535
FIRST USED ON OPTION/MODEL: KL10

TITLE: CHANNEL RAM CONTROL

SIZE	CODE	NUMBER	REV.
D	CS	M8535-0-CRC2	C

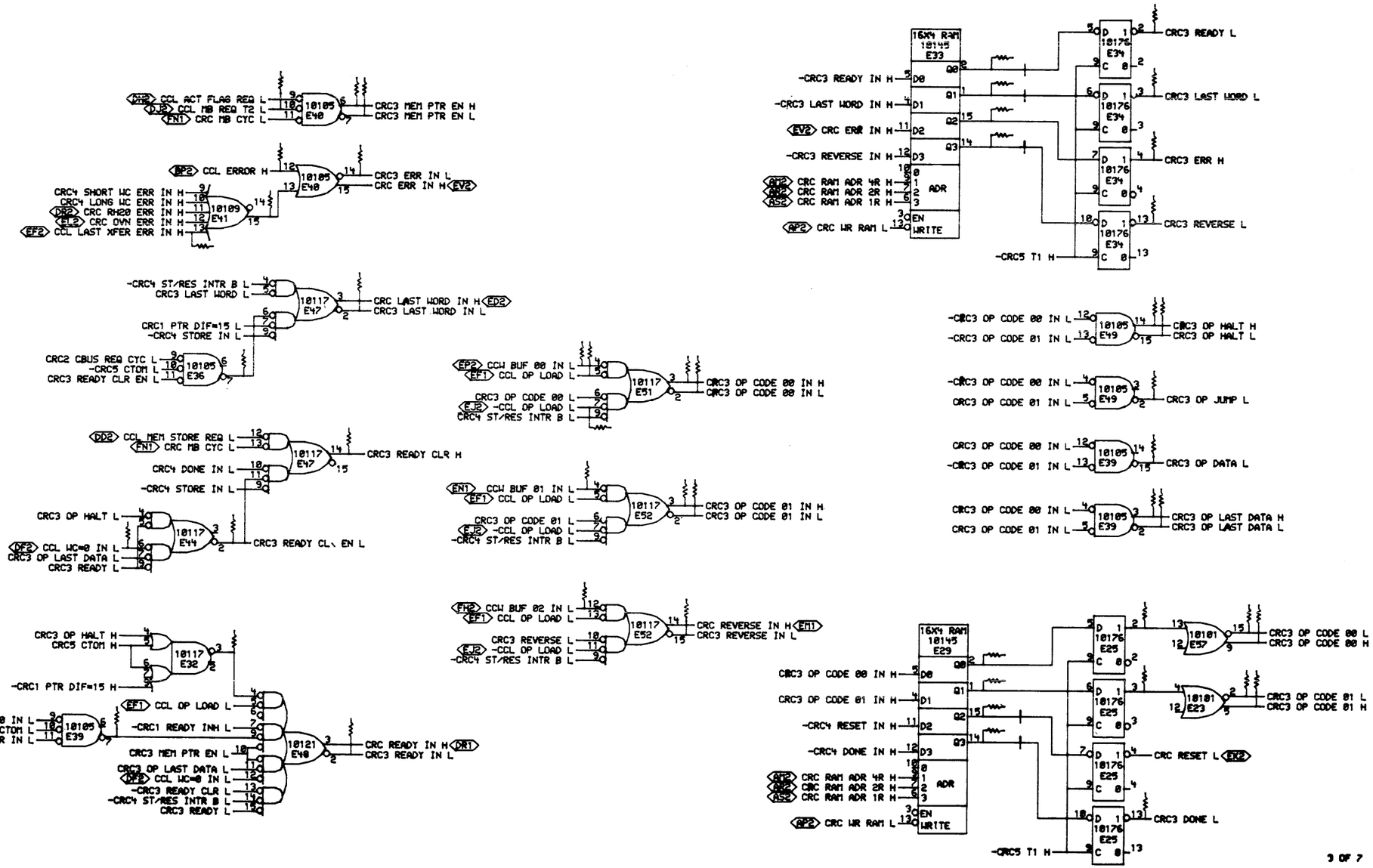

"THIS DRAWING AND SPECIFICATIONS, HEREIN, ARE THE PROPERTY OF DIGITAL EQUIPMENT CORPORATION AND SHALL NOT BE REPRODUCED OR COPIED OR USED IN WHOLE OR IN PART AS THE BASIS FOR THE MANUFACTURE OR SALE OF ITEMS WITHOUT WRITTEN PERMISSION. COPYRIGHT © 1974, DIGITAL EQUIPMENT CORPORATION"

REVISIONS		
CHK	CHANGE NO.	REV

digital

CRC3S.DWG 4.1793 13-OCT-76 13:02

DWN.	DATE 01-NOV-76	ENG.	DATE
CHK'D	DATE	BOARD LOCATIONS 4A-1B	
		SHEET 1 OF 1	

NEXT HIGHER ASSEMBLY: B-DD-M8535-0

FIRST USED ON OPTION/MODEL: KL10

TITLE: CHANNEL RAM CONTROL

SIZE	CODE	NUMBER	REV.
D	CS	M8535-0-CRC3	C

MR 1

261

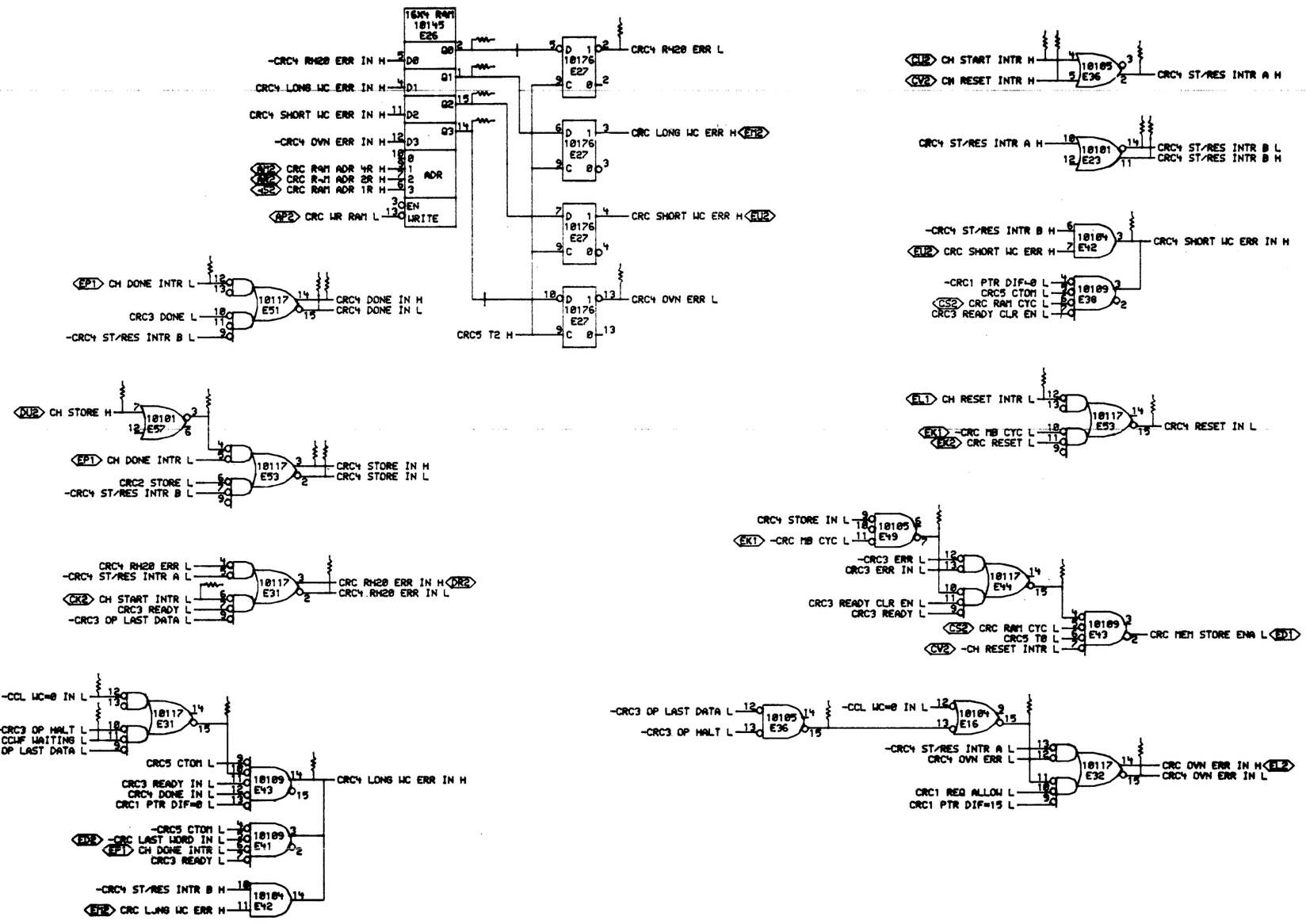

4 OF 5

"THIS DRAWING AND SPECIFICATIONS, HEREIN, ARE THE PROPERTY OF DIGITAL EQUIPMENT CORPORATION AND SHALL NOT BE REPRODUCED OR COPIED OR USED IN WHOLE OR IN PART AS THE BASIS FOR THE MANUFACTURE OR SALE OF ITEMS WITHOUT WRITTEN PERMISSION. COPYRIGHT © 1976, DIGITAL EQUIPMENT CORPORATION"

REVISIONS		
C BY	CHANGE NO.	REV

DRN. DATE ENG. DATE
CHK. DATE BOARD LOCATION: 4-E18
SHEET OF
NEXT HIGHER ASSEMBLY:
FIRST USED ON OPTION/MODEL: KL10 B-DD-M8535-0

TITLE: CHANNEL RAM CONTROL

SIZE	CODE	NUMBER	REV.
D	CS	M8535-0-CRC4	C

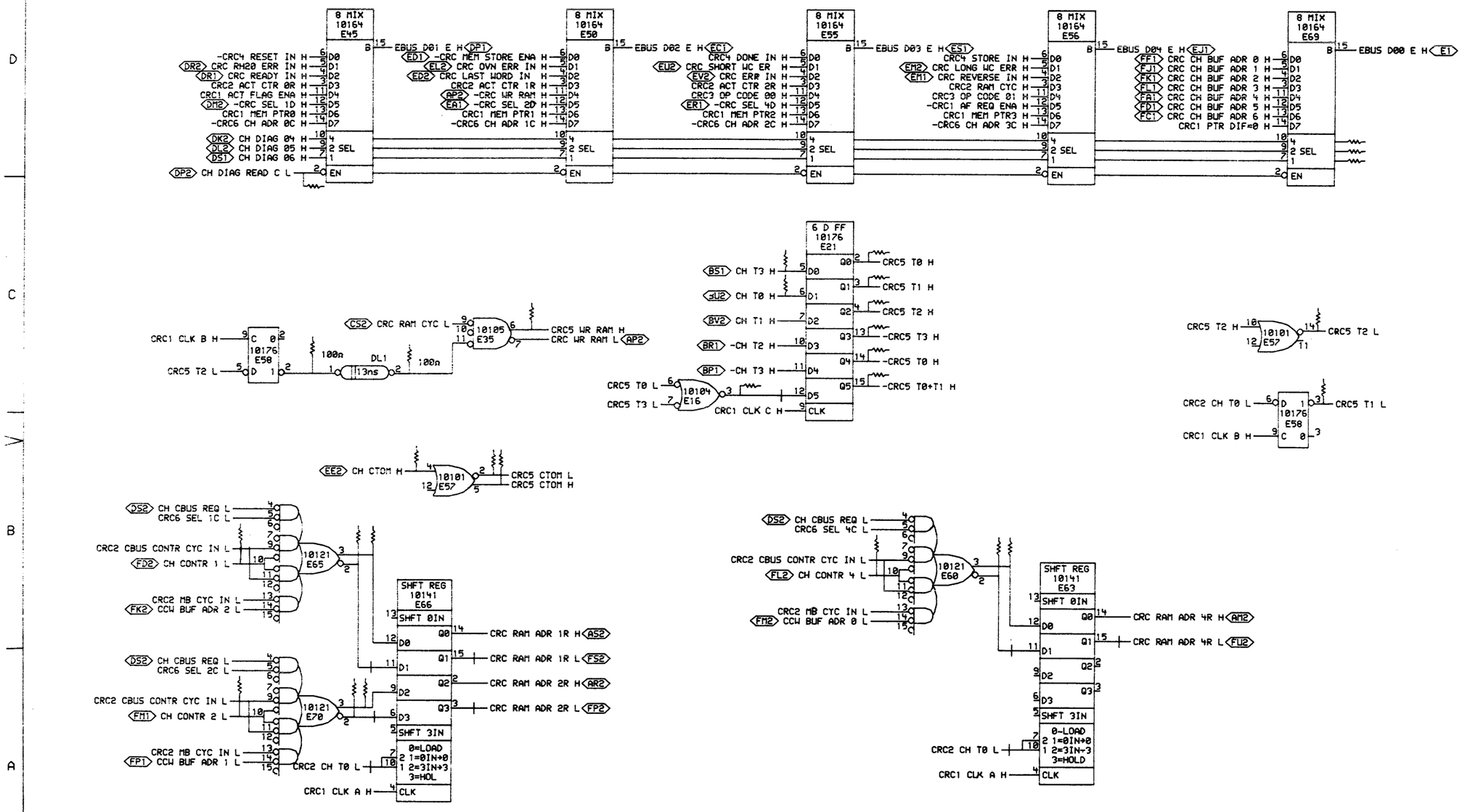

5 OF 7

"THIS DRAWING AND SPECIFICATIONS, HEREIN, ARE THE PROPERTY OF DIGITAL EQUIPMENT CORPORATION AND SHALL NOT BE REPRODUCED OR COPIED OR USED IN WHOLE OR IN PART AS THE BASIS FOR THE MANUFACTURE OR SALE OF ITEMS WITHOUT WRITTEN PERMISSION.
COPYRIGHT © 1976, DIGITAL EQUIPMENT CORPORATION"

REVISIONS		
CHK	CHANGE NO.	REV

digital

DRW. L. Loosley DATE 01-NOV-76 ENG. DATE 9/8/76
CHK. D. Hoffman DATE 11/2/76 BOARD LOCATION: 4AF10
CR5ES.DRW[4,175] 13-OCT-76 14:28 SHEET 1 OF 1
FIRST USED ON OPTION/MODEL: KL10 NEXT HIGHER ASSEM LT:

TITLE: CHANNEL RAM CONTROL

SIZE	CODE	NUMBER	REV.
D	CS	M8535-0-CRC5	C

263

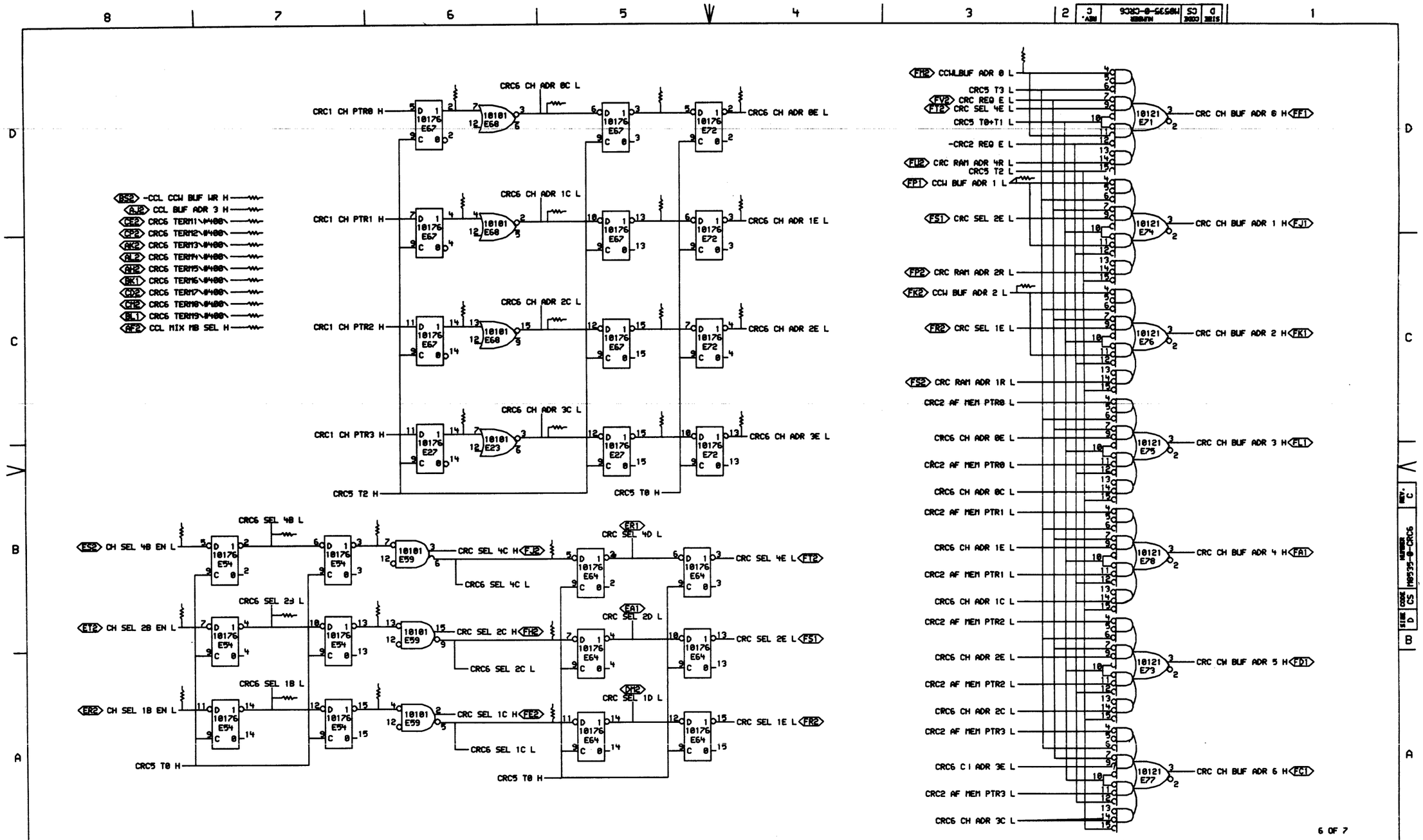

"THIS DRAWING AND SPECIFICATIONS, HEREIN, ARE THE PROPERTY OF DIGITAL EQUIPMENT CORPORATION AND SHALL NOT BE REPRODUCED OR COPIED OR USED IN WHOLE OR IN PART AS THE BASIS FOR THE MANUFACTURE OR SALE OF ITEMS WITHOUT WRITTEN PERMISSION.
"COPYRIGHT © 1976, DIGITAL EQUIPMENT CORPORATION"

REVISIONS		
CHK	CHANGE NO.	REV

digital

DRAWN: [illegible] DATE 01-NOV-76
CHK'D: [illegible] DATE 11/2/76
ENG: [illegible] DATE 11/2/76
CRC6ES.DRW(4.175) 13-OCT-76 15:52
BOARD LOCATION: KF10
SHEET 1 OF 1
FIRST USED ON OPTION/MODEL: KL10
NEXT HIGHER ASSEMBLY: B-DD-M8535-0

TITLE: CHANNEL RAM CONTROL

SIZE	CODE	NUMBER	REV.
D	CS	M8535-0-CRC6	C

MR

264

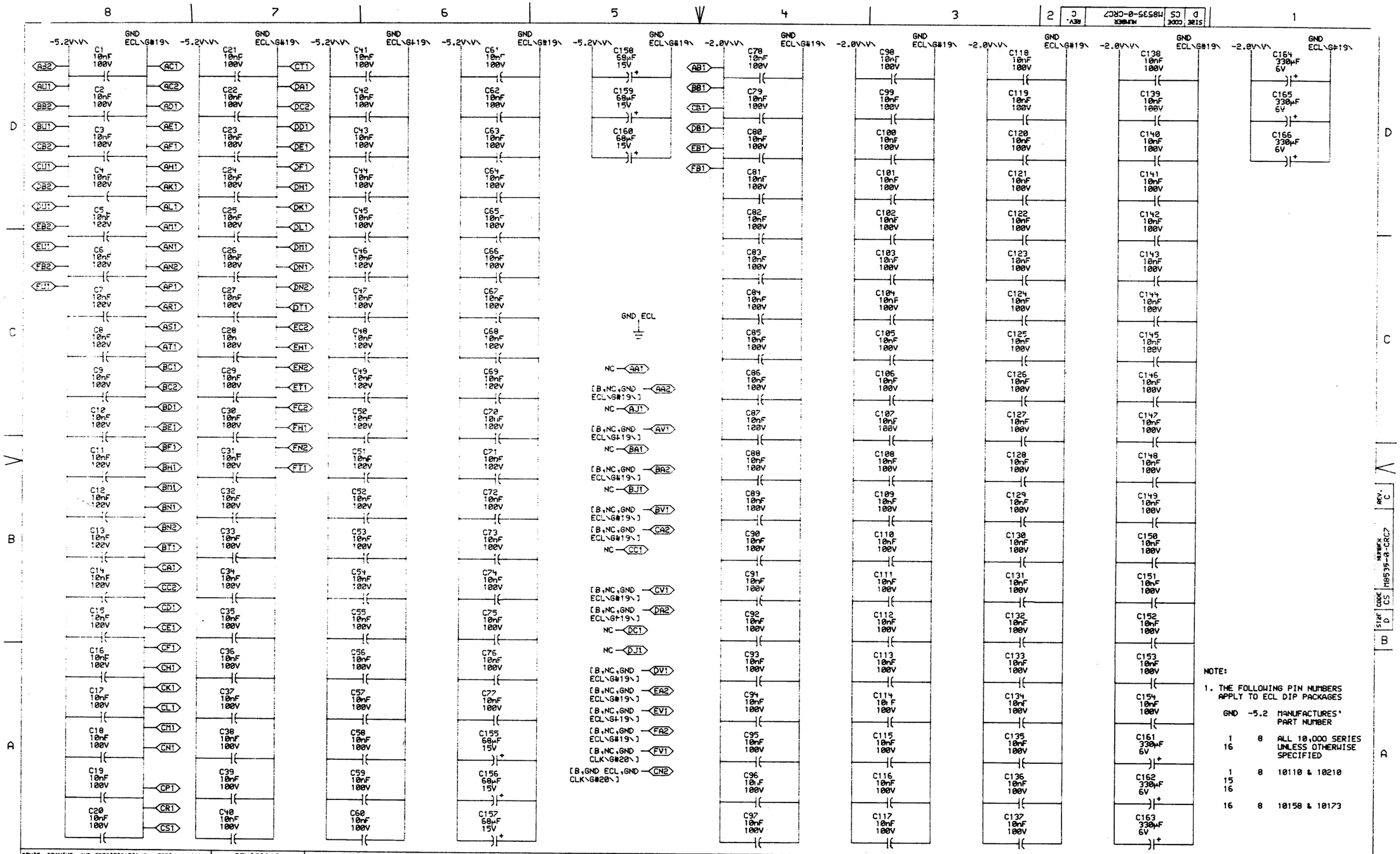
-5.2V\V\
GND ECL\G#19\
-2.0V\V\
C1 10nF 100V
C2 10nF 100V
C3 10nF 100V
C4 10nF 100V
C5 10nF 100V
C6 10nF 100V
C7 10nF 100V
C8 10nF 100V
C9 10nF 100V
C10 10nF 100V
C11 10nF 100V
C12 10nF 100V
C13 10nF 100V
C14 10nF 100V
C15 10nF 100V
C16 10nF 100V
C17 10nF 100V
C18 10nF 100V
C19 10nF 100V
C20 10nF 100V
C21 10nF 100V
C22 10nF 100V
C23 10nF 100V
C24 10nF 100V
C25 10nF 100V
C26 10nF 100V
C27 10nF 100V
C28 10n 100V
C29 10nF 100V
C30 10nF 100V
C31 10nF 100V
C32 10nF 100V
C33 10nF 100V
C34 10nF 100V
C35 10nF 100V
C36 10nF 100V
C37 10nF 100V
C38 10nF 100V
C39 10nF 100V
C40 10nF 100V
C41 10nF 100V
C42 10nF 100V
C43 10nF 100V
C44 10nF 100V
C45 10nF 100V
C46 10nF 100V
C47 10nF 100V
C48 10nF 100V
C49 10nF 100V
C50 10nF 100V
C51 10nF 100V
C52 10nF 100V
C53 10nF 100V
C54 10nF 100V
C55 10nF 100V
C56 10nF 100V
C57 10nF 100V
C58 10nF 100V
C59 10nF 100V
C60 10nF 100V
C61 10nF 100V
C62 10nF 100V
C63 10nF 100V
C64 10nF 100V
C65 10nF 100V
C66 10nF 100V
C67 10nF 100V
C68 10nF 100V
C69 10nF 100V
C70 10nF 100V
C71 10nF 100V
C72 10nF 100V
C73 10nF 100V
C74 10nF 100V
C75 10nF 100V
C76 10nF 100V
C77 10nF 100V
C155 68µF 15V
C156 68µF 15V
C157 68µF 15V
C158 68µF 15V
C159 68µF 15V
C160 68µF 15V
C78 10nF 100V
C79 10nF 100V
C80 10nF 100V
C81 10nF 100V
C82 10nF 100V
C83 10nF 100V
C84 10nF 100V
C85 10nF 100V
C86 10nF 100V
C87 10nF 100V
C88 10nF 100V
C89 10nF 100V
C90 10nF 100V
C91 10nF 100V
C92 10nF 100V
C93 10nF 100V
C94 10nF 100V
C95 10nF 100V
C96 10nF 100V
C97 10nF 100V
C98 10nF 100V
C99 10nF 100V
C100 10nF 100V
C101 10nF 100V
C102 10nF 100V
C103 10nF 100V
C104 10nF 100V
C105 10nF 100V
C106 10nF 100V
C107 10nF 100V
C108 10nF 100V
C109 10nF 100V
C110 10nF 100V
C111 10nF 100V
C112 10nF 100V
C113 10nF 100V
C114 10nF 100V
C115 10nF 100V
C116 10nF 100V
C117 10nF 100V
C118 10nF 100V
C119 10nF 100V
C120 10nF 100V
C121 10nF 100V
C122 10nF 100V
C123 10nF 100V
C124 10nF 100V
C125 10nF 100V
C126 10nF 100V
C127 10nF 100V
C128 10nF 100V
C129 10nF 100V
C130 10nF 100V
C131 10nF 100V
C132 10nF 100V
C133 10nF 100V
C134 10nF 100V
C135 10nF 100V
C136 10nF 100V
C137 10nF 100V
C138 10nF 100V
C139 10nF 100V
C140 10nF 100V
C141 10nF 100V
C142 10nF 100V
C143 10nF 100V
C144 10nF 100V
C145 10nF 100V
C146 10nF 100V
C147 10nF 100V
C148 10nF 100V
C149 10nF 100V
C150 10nF 100V
C151 10nF 100V
C152 10nF 100V
C153 10nF 100V
C154 10nF 100V
C161 330µF 6V
C162 330µF 6V
C163 330µF 6V
C164 330µF 6V
C165 330µF 6V
C166 330µF 6V
GND ECL
NC AA1
[B,NC,GND ECL\G#19\] AA2
NC AJ1
[B,NC,GND ECL\G#19\] AV1
NC BA1
[B,NC,GND ECL\G#19\] BA2
NC BJ1
[B,NC,GND ECL\G#19\] BV1
[B,NC,GND ECL\G#19\] CA2
NC CC1
[B,NC,GND ECL\G#19\] CV1
[B,NC,GND ECL\G#19\] DA2
NC DC1
NC DJ1
[B,NC,GND ECL\G#19\] DV1
[B,NC,GND ECL\G#19\] EA2
[B,NC,GND ECL\G#19\] EV1
[B,NC,GND ECL\G#19\] FA2
[B,NC,GND CLK\G#20\] FV1
[B,GND ECL,GND CLK\G#20\] CN2
AB2 AU1 BB2 BU1 CB2 CU1 DB2 DU1 EB2 EU1 FB2 FU1
AC1 AC2 AD1 AE1 AF1 AH1 AK1 AL1 AM1 AN1 AN2 AP1 AR1 AS1 AT1 BC1 BC2 BD1 BE1 BF1 BH1 BM1 BN1 BN2 BT1 CA1 CC2 CD1 CE1 CF1 CH1 CK1 CL1 CM1 CN1 CP1 CR1 CS1
CT1 DA1 DC2 DD1 DE1 DF1 DH1 DK1 DL1 DM1 DN1 DN2 DT1 EC2 EH1 EN2 ET1 FC2 FH1 FN2 FT1
AB1 BB1 CB1 DB1 EB1 FB1
NOTE:
1. THE FOLLOWING PIN NUMBERS APPLY TO ECL DIP PACKAGES
GND -5.2 MANUFACTURES' PART NUMBER
1 8 ALL 10,000 SERIES UNLESS OTHERWISE SPECIFIED
16
1 8 10110 & 10210
15
16
16 8 10158 & 10173
"THIS DRAWING AND SPECIFICATIONS, HEREIN, ARE THE PROPERTY OF DIGITAL EQUIPMENT CORPORATION A D SHALL NOT BE REPRODUCED OR COPIED OR USED IN WHOLE OR IN PART AS THE BASIS FOR THE MANUFACTURE OR SALE OF ITEMS WITHOUT WRITTEN PERMISSION.
COPYRIGHT © 1976, DIGITAL EQUIPMENT CORPORATION"
REVISIONS
CHK CHANGE NO. REV
digital
DRN. D. Toomey 02-NOV-76
CHK'D. E. Stephens 11/5/76
DATE
ENG.
DATE
BOARD LOCATION: 4AF10
SHEET 1 OF 1
CRC7ES.DRW[4,175] 13-OCT-76 13:28
NEXT HIGHER ASSEMBLY: B-DD-M8535-0
FIRST USED ON OPTION/MODEL: KL10
TITLE: CHANNEL RAM CNTRL PWR, GND, AND CAPS
SIZE D
CODE CS
NUMBER M8535-0-CRC7
REV. C
265

RESISTOR LOC(PIN)	SHOWN ON DRW#	REF	VALUE	TERMINATES SIGNAL
R108(1)	CRC5	C5	100Ω	%DL1(2)
R53(1)	CRC1	A7	68Ω	%E1(2)
R107(1)	CRC1	A7	68Ω	%E1(3)
R105(1)	CRC1	B7	68Ω	%E1(6)
R106(1)	CRC1	A7	68Ω	%E1(7)
R162(1)	CRC1	D4	68Ω	%E10(14)
R150(1)	CRC1	D4	68Ω	%E10(15)
R161(1)	CRC1	D4	68Ω	%E10(2)
R163(1)	CRC1	D4	68Ω	%E10(3)
R113(1)	CRC1	B3	68Ω	%E12(15)
R51(1)	CRC1	A4	68Ω	%E14(1)
R2(1)	CRC1	A4	68Ω	%E14(15)
R4(1)	CRC1	A4	68Ω	%E14(2)
R216(1)	CRC1	D5	68Ω	%E16(14)
R175(1)	CRC4	B3	68Ω	%E16(15)
R217(1)	CRC1	D5	68Ω	%E16(2)
R221(1)	CRC5	C5	68Ω	%E16(3)
R129(1)	CRC2	A2	68Ω	%E17(14)
R128(1)	CRC2	A2	68Ω	%E17(15)
R124(1)	CRC2	A2	68Ω	%E17(2)
R127(1)	CRC2	B2	68Ω	%E17(3)
R109(1)	CRC1	C4	68Ω	%E2(2)
R112(1)	CRC1	C4	68Ω	%E2(3)
R115(1)	CRC1	C4	68Ω	%E2(6)
R111(1)	CRC1	C4	68Ω	%E2(7)
R182(1)	CRC2	C7	68Ω	%E22(2)
R64(1)	CRC2	D4	68Ω	%E24(2)
R88(1)	CRC3	B2	68Ω	%E25(2)
R125(1)	CRC3	A2	68Ω	%E25(3)
R173(1)	CRC4	D5	68Ω	%E26(1)
R171(1)	CRC4	D5	68Ω	%E26(14)
R170(1)	CRC4	D5	68Ω	%E26(15)
R174(1)	CRC4	D5	68Ω	%E26(2)
R125(1)	CRC6	C6	68Ω	%E27(14)
R101(1)	CRC6	C5	68Ω	%E27(15)
R13(1)	CRC3	B3	68Ω	%E29(1)
R11(1)	CRC3	A3	68Ω	%E29(14)
R14(1)	CRC3	A3	68Ω	%E29(15)
R12(1)	CRC3	B3	68Ω	%E29(2)
R16(1)	CRC2	A7	68Ω	%E30(1)

RESISTOR LOC(PIN)	SHOWN ON DRW#	REF	VALUE	TERMINATES SIGNAL
R7(1)	CRC2	A7	68Ω	%E30(14)
R10(1)	CRC2	A7	68Ω	%E30(15)
R20(1)	CRC2	B7	68Ω	%E30(2)
R76(1)	CRC4	B6	68Ω	%E31(15)
R83(1)	CRC3	B6	68Ω	%E32(3)
R23(1)	CRC3	D3	68Ω	%E33(1)
R21(1)	CRC3	D3	68Ω	%E33(14)
R22(1)	CRC3	D3	68Ω	%E33(15)
R24(1)	CRC3	D3	68Ω	%E33(2)
R164(1)	CRC1	D4	68Ω	%E35(14)
R214(1)	CRC4	B4	68Ω	%E36(15)
R135(1)	CRC3	C6	68Ω	%E36(7)
R32(1)	CRC3	A7	68Ω	%E39(7)
R8(1)	CRC1	B3	68Ω	%E4(5)
R242(1)	CRC3	C6	68Ω	%E41(15)
R131(1)	CRC2	B2	68Ω	%E42(2)
R82(1)	CRC4	B3	68Ω	%E44(15)
R25(1)	CRC4	B3	68Ω	%E49(7)
R254(1)	CRC6	B6	68Ω	%E54(13)
R258(1)	CRC6	A6	68Ω	%E54(15)
R259(1)	CRC6	B6	68Ω	%E54(3)
R33(1)	CRC4	C7	68Ω	%E57(3)
R184(1)	CRC5	C7	100Ω	%E58(2)
R40(1)	CRC5	B3	68Ω	%E60(2)
R39(1)	CRC5	B3	68Ω	%E60(3)
R149(1)	CRC5	B7	68Ω	%E65(2)
R144(1)	CRC5	B7	68Ω	%E65(3)
R102(1)	CRC5	D5	68Ω	%E67(13)
R41(1)	CRC6	C6	68Ω	%E67(14)
R104(1)	CRC6	C5	68Ω	%E67(15)
R43(1)	CRC6	D6	68Ω	%E67(2)
R99(1)	CRC6	D5	68Ω	%E67(3)
R45(1)	CRC6	D6	68Ω	%E67(4)
R98(1)	CRC2	B5	68Ω	%E68(11)
R148(1)	CRC5	A7	68Ω	%E70(2)
R147(1)	CRC5	A7	68Ω	%E70(3)
R146(1)	CRC2	C7	68Ω	%E8(3)
R211(1)	CRC6	D7	68Ω	CCL BUF ADR 3 H
R220(1)	CRC6	D7	68Ω	-CCL CCW BUF WR H
R165(1)	CRC2	D7	68Ω	CCL CCWF CLR H

RESISTOR LOC(PIN)	SHOWN ON DRW#	REF	VALUE	TERMINATES SIGNAL
R238(1)	CRC3	D6	68Ω	CCL ERROR H
R178(1)	CRC3	C7	68Ω	CCL LAST XFER ERR IN H
R6(1)	CRC2	C2	68Ω	CCL LOAD AC H
R60(1)	CRC2	D2	68Ω	-CCL LOAD AC H
R243(1)	CRC3	D6	68Ω	-CCL MB REQ T2 H
R209(1)	CRC6	C7	68Ω	CCL MIX MB SEL H
R86(1)	CRC3	C5	68Ω	CCL OP LOAD H
R84(1)	CRC3	C5	68Ω	-CCL OP LOAD H
R59(1)	CRC2	C7	68Ω	-CCL RAM REQ H
R159(1)	CRC2	A3	68Ω	-CCL REQ CTR EN H
R72(1)	CRC4	B7	68Ω	CCL WC=0 IN H
R30(1)	CRC3	B7	68Ω	-CCL WC=0 IN H
R116(1)	CRC2	D2	68Ω	-CCW ACT CTR 0 EN H
R62(1)	CRC2	C2	68Ω	-CCW ACT CTR 1 EN H
R61(1)	CRC2	B2	68Ω	-CCW ACT CTR 2 EN H
R142(1)	CRC3	C5	68Ω	-CCW BUF 00 IN H
R89(1)	CRC3	B5	68Ω	-CCW BUF 01 IN H
R82(1)	CRC3	B5	68Ω	-CCW BUF 02 IN H
R196(1)	CRC6	D3	68Ω	-CCW BUF ADR 0 H
R264(1)	CRC6	D3	68Ω	-CCW BUF ADR 1 H
R152(1)	CRC6	C3	68Ω	-CCW BUF ADR 2 H
R227(1)	CRC4	B7	68Ω	CCW CCWF WAITING H
R56(1)	CRC2	C7	68Ω	CH CBUS REQ H
R145(1)	CRC2	C6	68Ω	-CH CBUS REQ H
R198(1)	CRC5	B7	68Ω	-CH CONTR 1 H
R200(1)	CRC5	A7	68Ω	-CH CONTR 2 H
R194(1)	CRC5	B4	68Ω	-CH CONTR 4 H
R57(1)	CRC2	C7	68Ω	CH CONTR REQ H
R168(1)	CRC2	C7	68Ω	-CH CONTR REQ H
R92(1)	CRC5	B6	68Ω	CH CTOM H
R263(1)	CRC5	D2	68Ω	CH DIAG 04 H
R262(1)	CRC5	D2	68Ω	CH DIAG 05 H
R266(1)	CRC5	D2	68Ω	CH DIAG 06 H
R265(1)	CRC5	C7	68Ω	-CH DIAG READ C H
R35(1)	CRC4	C7	68Ω	-CH DONE INTR H
R58(1)	CRC2	C7	68Ω	CH MR RESET B H
R44(1)	CRC2	B5	68Ω	-CH REQ D H
R77(1)	CRC4	D3	68Ω	CH RESET INTR H
R34(1)	CRC4	C3	68Ω	-CH RESET INTR H
R252(1)	CRC6	A8	68Ω	-CH SEL 1B EN H

RESISTOR LOC(PIN)	SHOWN ON DRW#	REF	VALUE	TERMINATES SIGNAL
R256(1)	CRC6	B8	68Ω	-CH SEL 2B EN H
R255(1)	CRC6	B8	68Ω	-CH SEL 4B EN H
R187(1)	CRC2	D7	68Ω	-CH START H
R179(1)	CRC4	D3	68Ω	CH START INTR H
R234(1)	CRC4	B7	68Ω	-CH START INTR H
R93(1)	CRC4	C7	68Ω	CH STORE H
R91(1)	CRC5	C5	68Ω	CH T0 H
R224(1)	CRC5	C5	68Ω	CH T3 H
R130(1)	CRC1	B2	68Ω	CLK CRC H
R239(1)	CRC1	D7	68Ω	CRC1 ACT FLAG ALLOW H
R245(1)	CRC1	D7	68Ω	CRC1 ACT FLAG ENA H
R141(1)	CRC1	B3	68Ω	-CRC1 AF REQ ENA H
R215(1)	CRC1	C3	68Ω	CRC1 CH PTR PLUS H
R95(1)	CRC1	D2	68Ω	CRC1 CH PTR0 H
R205(1)	CRC1	D3	68Ω	CRC1 CH PTR0 IN H
R96(1)	CRC1	D2	68Ω	CRC1 CH PTR1 H
R155(1)	CRC1	D3	68Ω	CRC1 CH PTR1 IN H
R94(1)	CRC1	D2	68Ω	CRC1 CH PTR2 H
R206(1)	CRC1	D3	68Ω	CRC1 CH PTR2 IN H
R169(1)	CRC1	D2	68Ω	CRC1 CH PTR3 H
R154(1)	CRC1	D3	68Ω	CRC1 CH PTR3 IN H
R42(1)	CRC1	B2	68Ω	CRC1 CLK A H
R38(1)	CRC1	B2	68Ω	CRC1 CLK B H
R222(1)	CRC1	B2	68Ω	CRC1 CLK C H
R133(1)	CRC1	B2	68Ω	CRC1 CLK D H
R132(1)	CRC1	B2	68Ω	CRC1 CLK E H
R166(1)	CRC1	B2	68Ω	CRC1 CLK F H
R244(1)	CRC1	C2	68Ω	CRC1 MEM PTR0 H
R158(1)	CRC1	C3	68Ω	CRC1 MEM PTR0 IN H
R249(1)	CRC1	C2	68Ω	CRC1 MEM PTR1 H
R157(1)	CRC1	C3	68Ω	CRC1 MEM PTR1 IN H
R189(1)	CRC1	C2	68Ω	CRC1 MEM PTR2 H
R153(1)	CRC1	C3	68Ω	CRC1 MEM PTR2 IN H
R143(1)	CRC1	C2	68Ω	CRC1 MEM PTR3 H
R54(1)	CRC1	C3	68Ω	CRC1 MEM PTR3 IN H
R5(1)	CRC1	B6	68Ω	CRC1 PTR DIF0 H
R171(1)	CRC1	C7	68Ω	-CRC1 PTR DIF0 H
R52(1)	CRC1	A6	68Ω	CRC1 PTR DIF1 H
R120(1)	CRC1	B7	68Ω	-CRC1 PTR DIF1 H
R3(1)	CRC1	A6	68Ω	CRC1 PTR DIF2 H

NOTE:

1. ALL TERMINATORS HAVE PIN TWO CONNECTED TO -2.0V AND ARE 5% 1/4WATT UNLESS OTHERWISE SPECIFIED
2. ENTRIES ARE SORTED BY SIGNAL NAME
3. % INDICATES OUTPUT OF DIP LOC AND () INDICATES PIN NUMBER

"THIS DRAWING AND SPECIFICATIONS, HEREIN, ARE THE PROPERTY OF DIGITAL EQUIPMENT CORPORATION AND SHALL NOT BE REPRODUCED OR COPIED OR USED IN WHOLE OR IN PART AS THE BASIS FOR THE MANUFACTURE OR SALE OF ITEMS WITHOUT WRITTEN PERMISSION.
COPYRIGHT © 1976, DIGITAL EQUIPMENT CORPORATION"

REVISIONS		
CHK	CHANGE NO.	REV

digital

DRN. C Smith DATE 28-OCT-76 ENG. DATE
CHK'D. DATE BOARD LOCATION:
SHEET 1 OF 2
S85351.DRW[4,175] 28-OCT-76 10:21 NEXT HIGHER ASSEMBLY: B-DD-M8535-0
FIRST USED ON OPTION/MODEL: KL10

TITLE: CHANNEL RAM TERMINATORS

SIZE	CODE	NUMBER	REV.
D	CS	M8535-0-RES	C

266

RESISTOR LOC(PIN)	SHOWN ON DRW#	REF	VALUE	TERMINATES SIGNAL
R119(1)	CRC1	B7	68Ω	-CRC1 PTR DIF2 H
R1(1)	CRC1	A6	68Ω	CRC1 PTR DIF3 H
R118(1)	CRC1	B7	68Ω	-CRC1 PTR DIF3 H
R261(1)	CRC1	C7	68Ω	CRC1 PTR DIF=0 H
R75(1)	CRC1	C7	68Ω	-CRC1 PTR DIF=0 H
R137(1)	CRC1	C7	68Ω	-CRC1 PTR DIF=15 H
R114(1)	CRC1	C7	68Ω	CRC1 PTR LATCH H
R85(1)	CRC1	D7	68Ω	CRC1 READY INH H
R117(1)	CRC1	D7	68Ω	-CRC1 READY INH H
R176(1)	CRC1	D4	68Ω	-CRC1 REQ ALLOW H
R17(1)	CRC2	D1	68Ω	CRC2 ACT CTR 0 IN H
R247(1)	CRC2	A5	68Ω	CRC2 ACT CTR 0R H
R122(1)	CRC2	A6	68Ω	-CRC2 ACT CTR 0R H
R15(1)	CRC2	C1	68Ω	CRC2 ACT CTR 1 IN H
R251(1)	CRC2	A5	68Ω	CRC2 ACT CTR 1R H
R63(1)	CRC2	A6	68Ω	-CRC2 ACT CTR 1R H
R10(1)	CRC2	C1	68Ω	CRC2 ACT CTR 2 IN H
R193(1)	CRC2	A5	68Ω	CRC2 ACT CTR 2R H
R201(1)	CRC2	B1	68Ω	-CRC2 AF MEM PTR0 H
R40(1)	CRC2	B1	68Ω	-CRC2 AF MEM PTR1 H
R49(1)	CRC2	A1	68Ω	-CRC2 AF MEM PTR2 H
R103(1)	CRC2	A1	68Ω	-CRC2 AF MEM PTR3 H
R203(1)	CRC2	C7	68Ω	-CRC2 CBUS CONTR CYC IN H
R232(1)	CRC2	C6	68Ω	-CRC2 CBUS REQ CYC H
R151(1)	CRC2	B6	68Ω	-CRC2 CH T0 H
R241(1)	CRC2	D4	68Ω	CRC2 DONE LOAD AC H
R55(1)	CRC2	D4	68Ω	-CRC2 DONE LOAD AC H
R199(1)	CRC2	C7	68Ω	-CRC2 MB CYC IN H
R103(1)	CRC2	D6	68Ω	-CRC2 MB CYC T3 H
R207(1)	CRC2	B1	68Ω	CRC2 RAM CYC H
R260(1)	CRC2	B4	68Ω	CRC2 REQ E H
R37(1)	CRC2	B6	68Ω	-CRC2 STORE H
R130(1)	CRC3	A2	68Ω	-CRC3 DONE H
R65(1)	CRC3	D2	68Ω	CRC3 ERR H
R26(1)	CRC3	D6	68Ω	-CRC3 ERR IN H
R136(1)	CRC3	D2	68Ω	-CRC3 LAST WORD H
R73(1)	CRC3	C6	68Ω	-CRC3 LAST WORD IN H
R110(1)	CRC3	D6	68Ω	CRC3 MEM PTR EN H
R31(1)	CRC3	D6	68Ω	-CRC3 MEM PTR EN H
R191(1)	CRC3	B1	68Ω	CRC3 OP CODE 00 H

RESISTOR LOC(PIN)	SHOWN ON DRW#	REF	VALUE	TERMINATES SIGNAL
R139(1)	CRC3	B1	68Ω	-CRC3 OP CODE 00 H
R71(1)	CRC3	C4	68Ω	CRC3 OP CODE 00 IN H
R27(1)	CRC3	C4	68Ω	-CRC3 OP CODE 00 IN H
R140(1)	CRC3	A1	68Ω	CRC3 OP CODE 01 H
R90(1)	CRC3	A2	68Ω	-CRC3 OP CODE 01 H
R70(1)	CRC3	B4	68Ω	CRC3 OP CODE 01 IN H
R20(1)	CRC3	B4	68Ω	-CRC3 OP CODE 01 IN H
R167(1)	CRC3	B2	68Ω	-CRC3 OP DATA H
R231(1)	CRC3	C2	68Ω	CRC3 OP HALT H
R29(1)	CRC3	C2	68Ω	-CRC3 OP HALT H
R100(1)	CRC3	C2	68Ω	-CRC3 OP JUMP H
R230(1)	CRC3	B2	68Ω	CRC3 OP LAST DATA H
R70(1)	CRC3	B2	68Ω	-CRC3 OP LAST DATA H
R67(1)	CRC3	D2	68Ω	-CRC3 READY H
R79(1)	CRC3	B6	68Ω	CRC3 READY CLR H
R177(1)	CRC3	B6	68Ω	-CRC3 READY CLR EN H
R74(1)	CRC3	A6	68Ω	-CRC3 READY IN H
R87(1)	CRC3	C2	68Ω	-CRC3 REVERSE H
R69(1)	CRC3	B4	68Ω	-CRC3 REVERSE IN H
R192(1)	CRC4	C6	68Ω	CRC4 DONE IN H
R66(1)	CRC4	C6	68Ω	-CRC4 DONE IN H
R220(1)	CRC4	A6	68Ω	CRC4 LONG WC ERR IN H
R172(1)	CRC4	C5	68Ω	-CRC4 OVN ERR H
R223(1)	CRC4	A2	68Ω	-CRC4 OVN ERR IN H
R60(1)	CRC4	C2	68Ω	-CRC4 RESET IN H
R233(1)	CRC4	D5	68Ω	-CRC4 R 120 ERR H
R229(1)	CRC4	B6	68Ω	-CRC4 RH20 ERR IN H
R226(1)	CRC4	C2	68Ω	CRC4 SHORT WC ERR IN H
R123(1)	CRC4	D2	68Ω	CRC4 ST/RES INTR A H
R36(1)	CRC4	D2	68Ω	CRC4 ST/RES INTR B H
R106(1)	CRC4	D2	68Ω	-CRC4 ST/RES INTR B H
R134(1)	CRC4	C6	68Ω	CRC4 STORE IN H
R19(1)	CRC4	C6	68Ω	-CRC4 STORE IN H
R200(1)	CRC5	B6	68Ω	CRC5 CTOM H
R156(1)	CRC5	B6	68Ω	-CRC5 CTOM H
R100(1)	CRC5	C4	68Ω	CRC5 T0 H
R81(1)	CRC5	C4	68Ω	-CRC5 T0 H
R46(1)	CRC5	C4	68Ω	-CRC5 T0:T1 H
R101(1)	CRC5	C4	68Ω	CRC5 T1 H
R9(1)	CRC5	C2	68Ω	-CRC5 T1 H

RESISTOR LOC(PIN)	SHOWN ON DRW#	REF	VALUE	TERMINATES SIGNAL
R97(1)	CRC5	C4	68Ω	CRC5 T2 H
R105(1)	CRC5	C2	68Ω	-CRC5 T2 H
R267(1)	CRC5	C4	68Ω	-CRC5 T3 H
R240(1)	CRC5	C6	68Ω	CRC5 WR RA1 H
R246(1)	CRC6	D5	68Ω	-CRC6 CH ADR 0C H
R204(1)	CRC6	D4	68Ω	-CRC6 CH ADR 0E H
R240(1)	CRC6	D5	68Ω	-CRC6 CH ADR 1C H
R50(1)	CRC6	D4	68Ω	-CRC6 CH ADR 1E H
R190(1)	CRC6	C5	68Ω	-CRC6 CH ADR 2C H
R47(1)	CRC6	C4	68Ω	-CRC6 CH ADR 2E H
R150(1)	CRC6	C5	68Ω	-CRC6 CH ADR 3C H
R105(1)	CRC6	C4	68Ω	-CRC6 CH ADR 3E H
R250(1)	CRC6	A7	68Ω	-CRC6 SEL 1B H
R195(1)	CRC6	A5	68Ω	-CRC6 SEL 1C H
R253(1)	CRC6	B7	68Ω	-CRC6 SEL 2B H
R202(1)	CRC6	B5	68Ω	-CRC6 SEL 2C H
R257(1)	CRC6	B7	68Ω	-CRC6 SEL 4B H
R197(1)	CRC6	B5	68Ω	-CRC6 SEL 4C H
R235(1)	CRC6	D7	68Ω	CRC6 TERM1\#400\
R237(1)	CRC6	C7	68Ω	CRC6 TERM2\#400\
R212(1)	CRC6	C7	68Ω	CRC6 TERM3\#400\
R213(1)	CRC6	C7	68Ω	CRC6 TERM4\#400\
R210(1)	CRC6	C7	68Ω	CRC6 TERM5\#400\
R210(1)	CRC6	C7	68Ω	CRC6 TERM6\#400\
R225(1)	CRC6	C7	68Ω	CRC6 TER 17\#400\
R236(1)	CRC6	C7	68Ω	CRC6 TERM8\#400\
R219(1)	CRC6	C7	68Ω	CRC6 TERM9\#400\

NOTE:

1. ALL TERMINATORS HAVE PIN TWO CONNECTED TO -2.0V AND ARE 5% 1/4WATT UNLESS OTHERWISE SPECIFIED
2. ENTRIES ARE SORTED BY SIGNAL NAME
3. % INDICATES OUTPUT OF DIP LOC AND () INDICATES PIN NUMBER

"THIS DRAWING AND SPECIFICATIONS, HEREIN, ARE THE PROPERTY OF DIGITAL EQUIPMENT CORPORATION AND SHALL NOT BE REPRODUCED OR COPIED OR USED IN WHOLE OR IN PART AS THE BASIS FOR THE MANUFACTURE OR SALE OF ITEMS WITHOUT WRITTEN PERMISSION. COPYRIGHT © 1976, DIGITAL EQUIPMENT CORPORATION"

REVISIONS		
CHK	CHANGE NO.	REV

digital

DRN. C Smith DATE 28-OCT-76 ENG. DATE 11/2/76
CHK'D BY DATE BOARD LOCATION:
SHEET 2 OF 2
S85352.DRW[4,175] 28-OCT-76 10:21 NEXT HIGHER ASSEMBLY: B-DD-M8535-0
FIRST USED ON OPTION/MODEL: KL10

TITLE: CHANNEL RAM TERMINATORS

SIZE	CODE	NUMBER	REV.
D	CS	M8535-0-RES	C

267

MR

REVISION CONTROL SHEET

CUSTOMER PRINT SET	MFG SET	DRAWING NO	NO OF SHT	DESCRIPTION	OPTION NO/FILE DATE	REVISIONS				
			-	MODULE REVISION		A	B	C	D	D
		D-UA-M8536-Ø-Ø	5	CHANNEL CONTROL LOGIC		-	A	B	C	C1
		D-CS-M8536-Ø-CCL1	1	CHANNEL CONTROL LOGIC		-	A	B	C	C1
		D-CS-M8536-Ø-CCL2	1	CHANNEL CONTROL LOGIC		-	A	A	B	B1
		D-CS-M8536-Ø-CCL3	1	CHANNEL CONTROL LOGIC		-	A	A	B	B1
		D-CS-M8536-Ø-CCL4	1	CHANNEL CONTROL LOGIC		-	A	B	C	C1
		D-CS-M8536-Ø-CCL5	1	CHANNEL CONTROL LOGIC		-	A	B	C	C1
		D-CS-M8536-Ø-CCL6	1	CHANNEL CONTROL LOGIC		-	A	B	C	C1
		D-CS-M8536-Ø-CCL7	1	CHANNEL CNTRL LGC PWR, CAPS, AND GNDS		-	A	B	C	C1
		D-CS-M8536-Ø-RES	2	CHAN CNTRL LOGIC TERM.		-	A	B	B	B1
		K-CO-M8536-Ø-4	1	CHANNEL CONTROL LOGIC (CALDEC DATA BASE)		B	B	B	B	B
		D-AH-M8536-Ø-5	4	CHANNEL CONTROL LOGIC		A	A	A	A	A
		B-MH-M8536-Ø-6	1	MODULE ECO HISTORY		REF	-	-	-	-
		5010926	-	ETCH CIRCUIT BOARD		B	B	B	B	B
		P00-M8536-ØØ		PROCESS SHEET (REF ONLY)		-				
					ECO NO	ORIG	00001	00002	00003	00004 REWORK VERSION

CUSTOMER PRINT SET CODES:
X = PRINT OF DOCUMENT INCLUDED IN PRINT SET
C = INCLUDES ALL PRINTS INDICATED ON DOCUMENT
S = CONFIDENTIAL AUTHORIZED SIGNATURE REQUIRED

TITLE		SIZE	CODE	NUMBER	REV
CHANNEL CONTROL LOGIC	SHEET 2 OF 3	B	DD	M8536-Ø	D

268

MR

THIS DRAWING AND SPECIFICATIONS, HEREIN, ARE THE PROPERTY OF DIGITAL EQUIPMENT CORPORATION AND SHALL NOT BE REPRODUCED OR COPIED OR USED IN WHOLE OR IN PART AS THE BASIS FOR THE MANUFACTURE OR SALE OF ITEMS WITHOUT WRITTEN PERMISSION
COPYRIGHT © 1975 DIGITAL EQUIPMENT CORPORATION

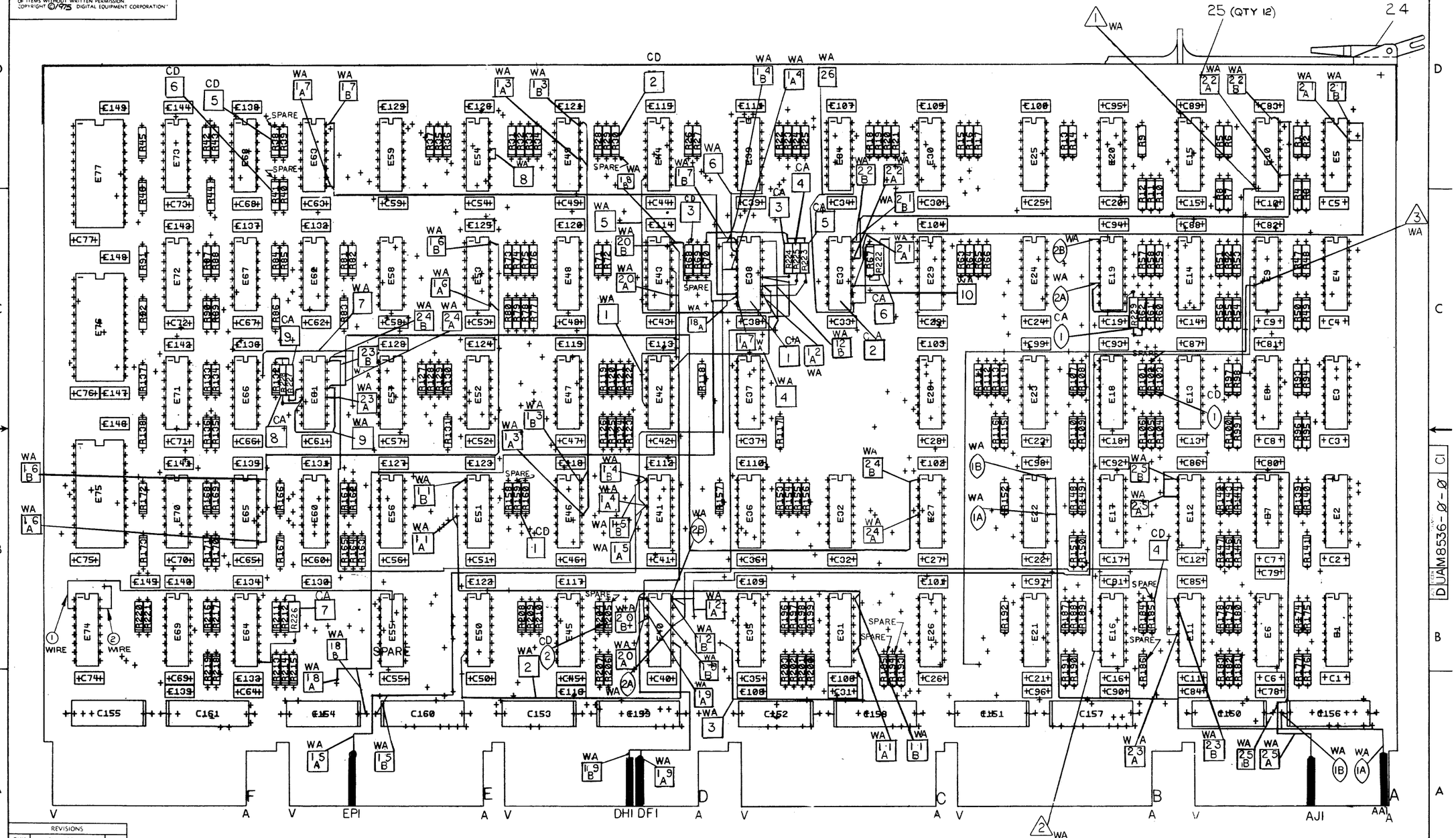

REVISIONS		
CHK	CHANGE NO	REV

TITLE	SIZE	CODE	NUMBER	REV.
CHANNEL CONTROL LOGIC	D	UA	M8536-Ø-Ø	C1
SCALE —	SHEET 2 OF 5		DIST.	

DUA M8536-Ø-Ø C1

269

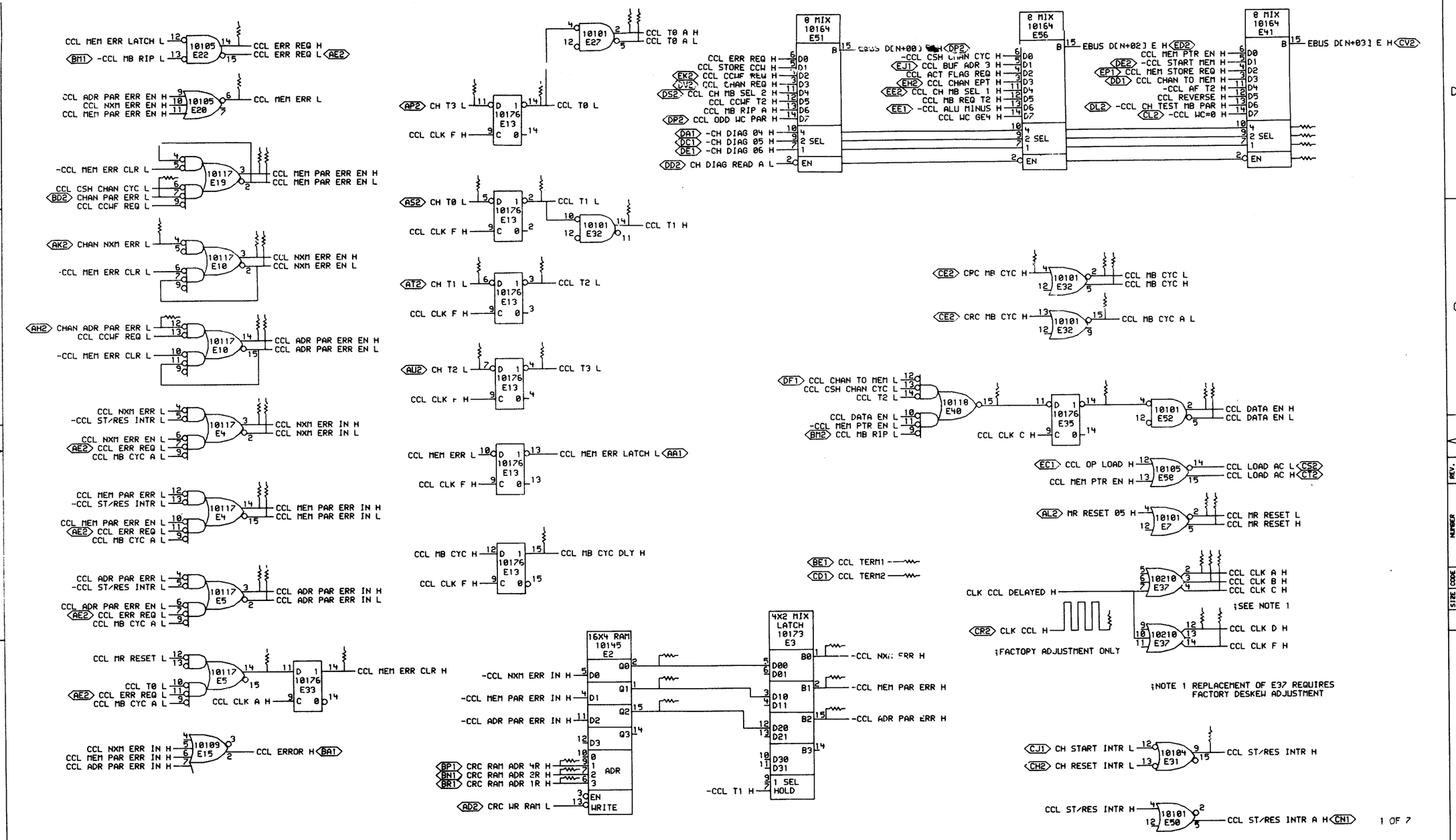

REVISIONS					
CHK	CHANGE NO.	REV	CHK	CHANGE NO.	REV
-	M8536-00003	C		M8536-00004	C1
				M. SCHWARTZ	

"THIS DRAWING AND SPECIFICATIONS, HEREIN, ARE THE PROPERTY OF DIGITAL EQUIPMENT CORPORATION AND SHALL NOT BE REPRODUCED OR COPIED OR USED IN WHOLE OR IN PART AS THE BASIS FOR THE MANUFACTURE OR SALE OF ITEMS WITHOUT WRITTEN PERMISSION. COPYRIGHT © 1976, DIGITAL EQUIPMENT CORPORATION"

digital

DRN. L. Loosley DATE 26-MAY-76
CHK'D. D. Johnson DATE 5/27/76
ENG. DATE
CCL1EX.DPW[4,477] 25-MAY-76 14:54
FIRST USED ON OPTION/MODEL: KL10
BOARD LOCATION: 4AF11
SHEET 1 OF 1
NEXT HIGHER ASSEMBLY: B-DD-M8536-0

TITLE: CHANNEL CONTROL LOGIC

SIZE	CODE	NUMBER	REV.
D	CS	M8536-0-CCL1	C1

230

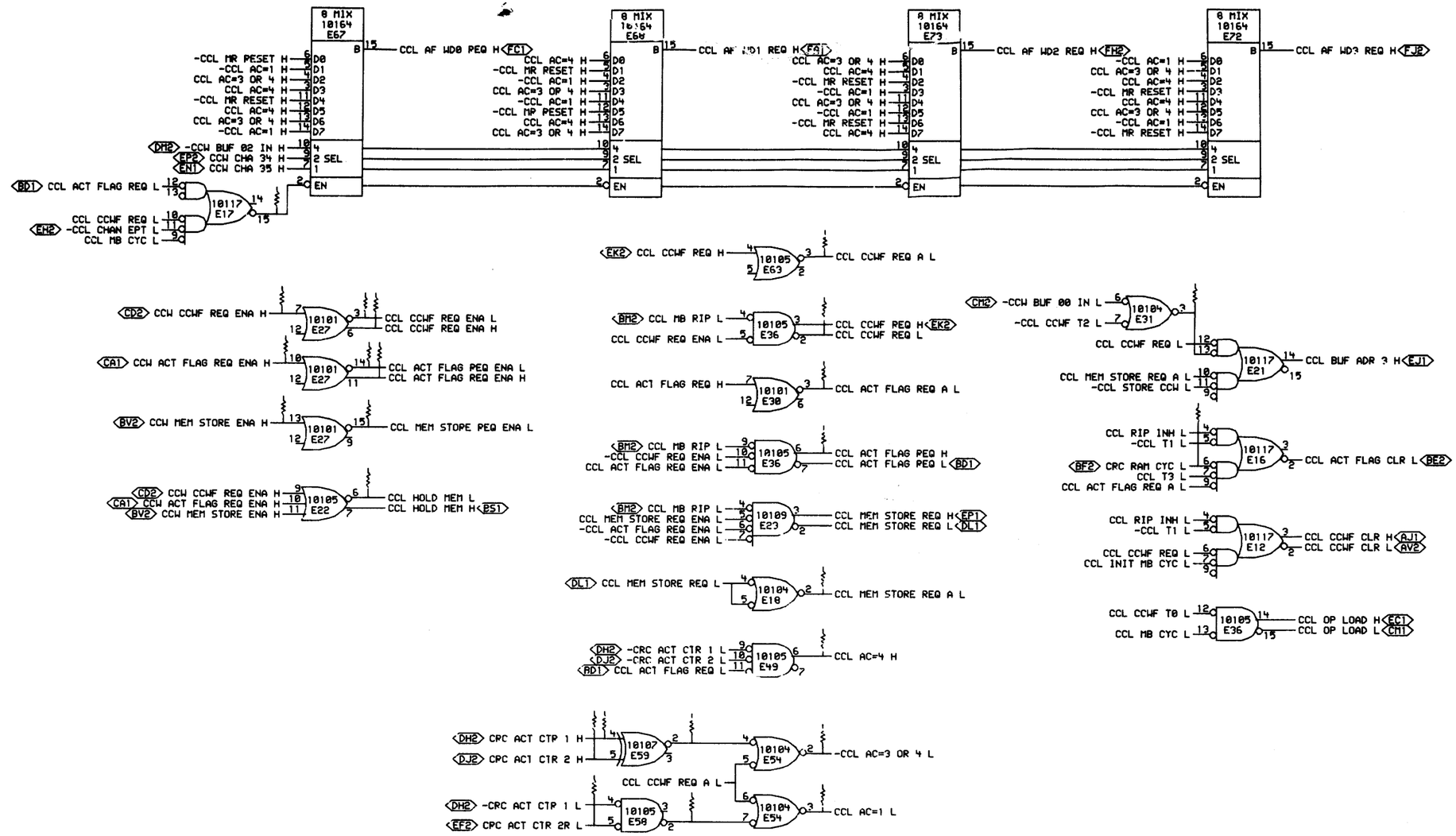

2 OF 7

"THIS DRAWING AND SPECIFICATIONS, HEREIN, ARE THE PROPERTY OF DIGITAL EQUIPMENT CORPORATION AND SHALL NOT BE REPRODUCED OR COPIED OR USED IN WHOLE OR IN PART AS THE BASIS FOR THE MANUFACTURE OR SALE OF ITEMS WITHOUT WRITTEN PERMISSION. COPYRIGHT © 1976, DIGITAL EQUIPMENT CORPORATION"

REVISIONS		
CHK	CHANGE NO.	REV
	M8536-00003	B
	M. SCHWARTZ	

CHK	CHANGE NO	REV
	M8536-00004	B
	M. SCHWARTZ	

digital

DRW. | DATE 22-JUN-76 | ENG. | DATE
CHK'D | DATE | BOARD LOCATION: 4AF11 | SHEET 1 OF 1
CCL2EX.DRW[4,4773] 28-MAY-76 13:24 | NEXT HIGHER ASSEMBLY: B-DD-M8536-0
FIRST USED ON OPTION/MODEL: KL10

TITLE: CHANNEL CONTROL LOGIC

SIZE	CODE	NUMBER	REV.
D	CS	M8536-0-CCL2	B1

271

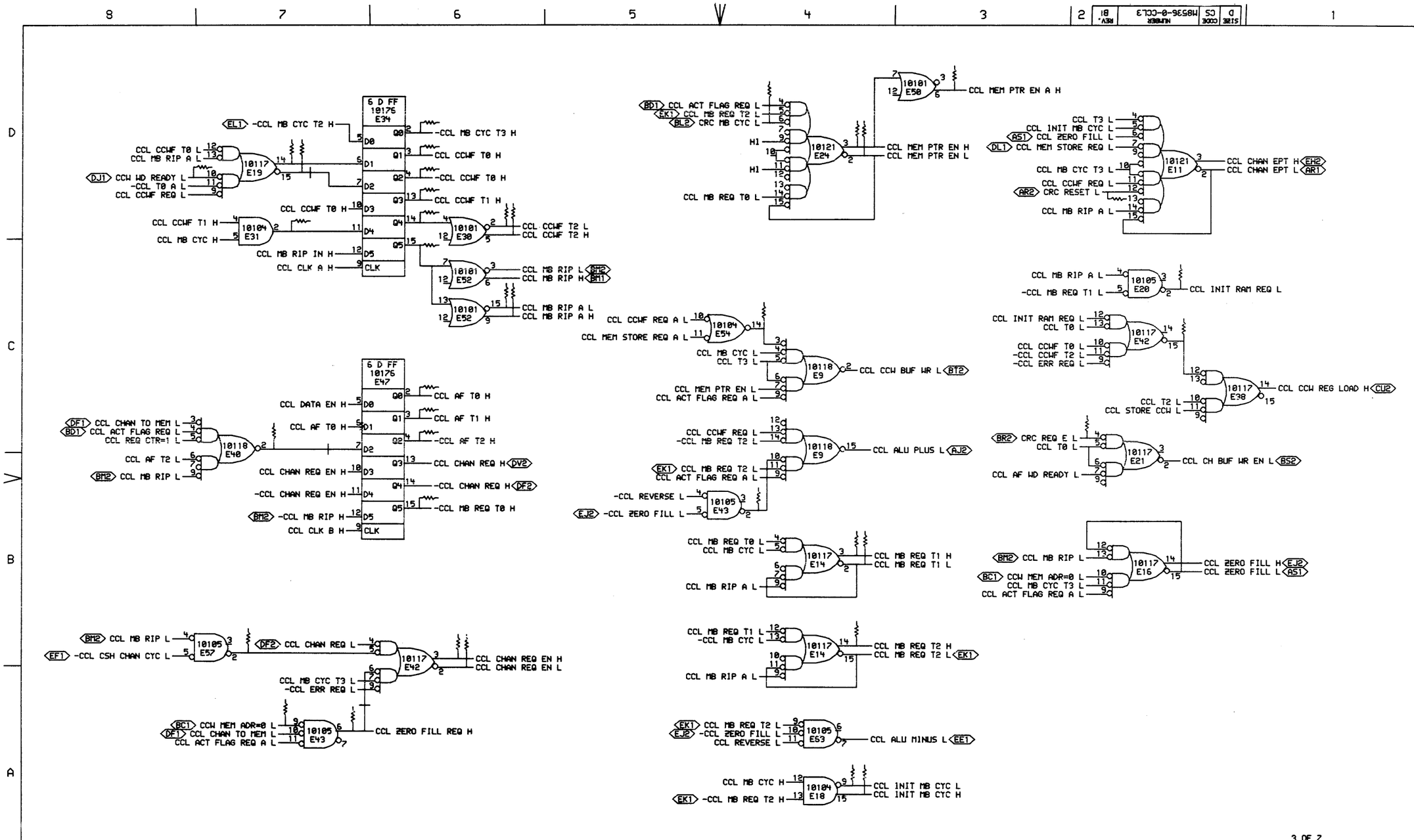

"THIS DRAWING AND SPECIFICATIONS, HEREIN, ARE THE PROPERTY OF DIGITAL EQUIPMENT CORPORATION AND SHALL NOT BE REPRODUCED OR COPIED OR USED IN WHOLE OR IN PART AS THE BASIS FOR THE MANUFACTURE OR SALE OF ITEMS WITHOUT WRITTEN PERMISSION. COPYRIGHT © 1976, DIGITAL EQUIPMENT CORPORATION"

REVISIONS			CHK	CHANGE NO.	REV.
CHK	CHANGE NO.	REV		M8536-00004	B1
-	M8536-00003	B	R.Q. Lemieux	M.SCHWARTZ	
	M. SCHWARTZ 7-14-75		M. SCHWARTZ		
	M. SCHWARTZ 3-6-76			1-26-77	

digital

DRN. L. Loosley DATE 26-MAY-76 ENG. DATE 6/25/76
CHK'D: DATE 6/25/76 BOARD LOCATION: 4AF11
CCL3EX.DPN(9,477). 25-MAY-76 14:53 SHEET 1 OF 1
FIRST USED ON OPTION/MODEL: KL10 NEXT HIGHER ASSEMBLY: B-DD-M8536-0

TITLE: CHANNEL CONTROL LOGIC

SIZE	CODE	NUMBER	REV.
D	CS	M8536-0-CCL3	B1

272

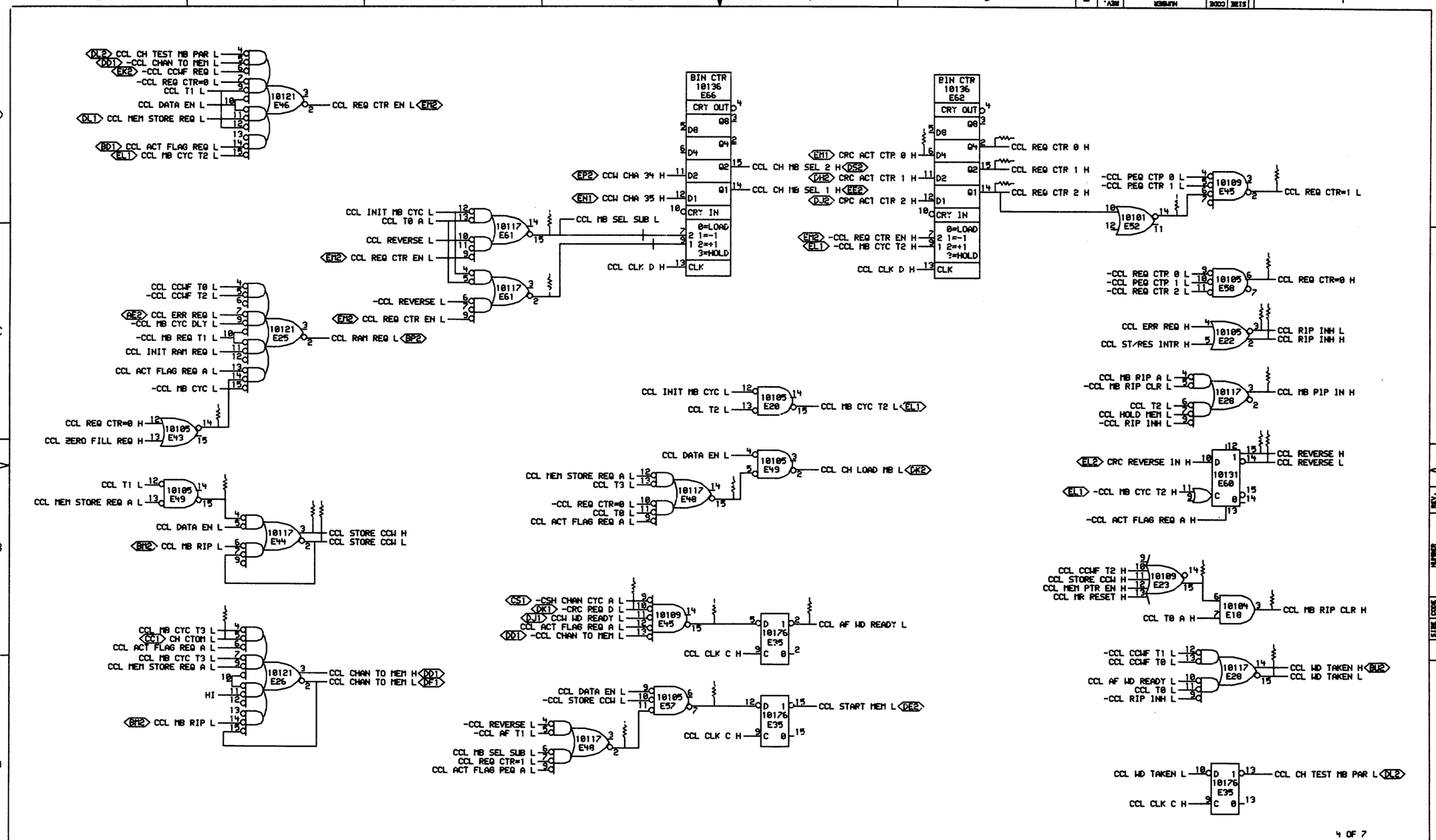

"THIS DRAWING AND SPECIFICATIONS, HEREIN, ARE THE PROPERTY OF DIGITAL EQUIPMENT CORPORATION AND SHALL NOT BE REPRODUCED OR COPIED OR USED IN WHOLE OR IN PART AS THE BASIS FOR THE MANUFACTURE OR SALE OF ITEMS WITHOUT WRITTEN PERMISSION. COPYRIGHT © 1976, DIGITAL EQUIPMENT CORPORATION"

REVISIONS			CHK	CHANGE NO	REV.
CHK	CHANGE NO.	REV		M8536-00004	C1
-	M8536-0003	C	R.O. Brassard 14JAN77		
	M. SCHWARTZ		M. SCHWARTZ		

digital

DRN. J. Lamay DATE 22-JUN-76
CHK. D. Allen DATE 6/23/76
ENG. M. Schwartz DATE 6/23/76
CCL4EX.DRW(4,422) 28-MAY-76 13:22
BOARD LOCATION: 4 OF 11
SHEET 1 OF 1
FIRST USED ON OPTION/MODEL: KL10
NEXT HIGHER ASSEMBLY: B-DD-M8536-0

TITLE: CHANNEL CONTROL LOGIC

SIZE	CODE	NUMBER	REV.
D	CS	M8536-0-CCL4	C1

273

S1	S0	ALU OPERATION
L	L	A PLUS 0
H	H	A MINUS B MINUS 1

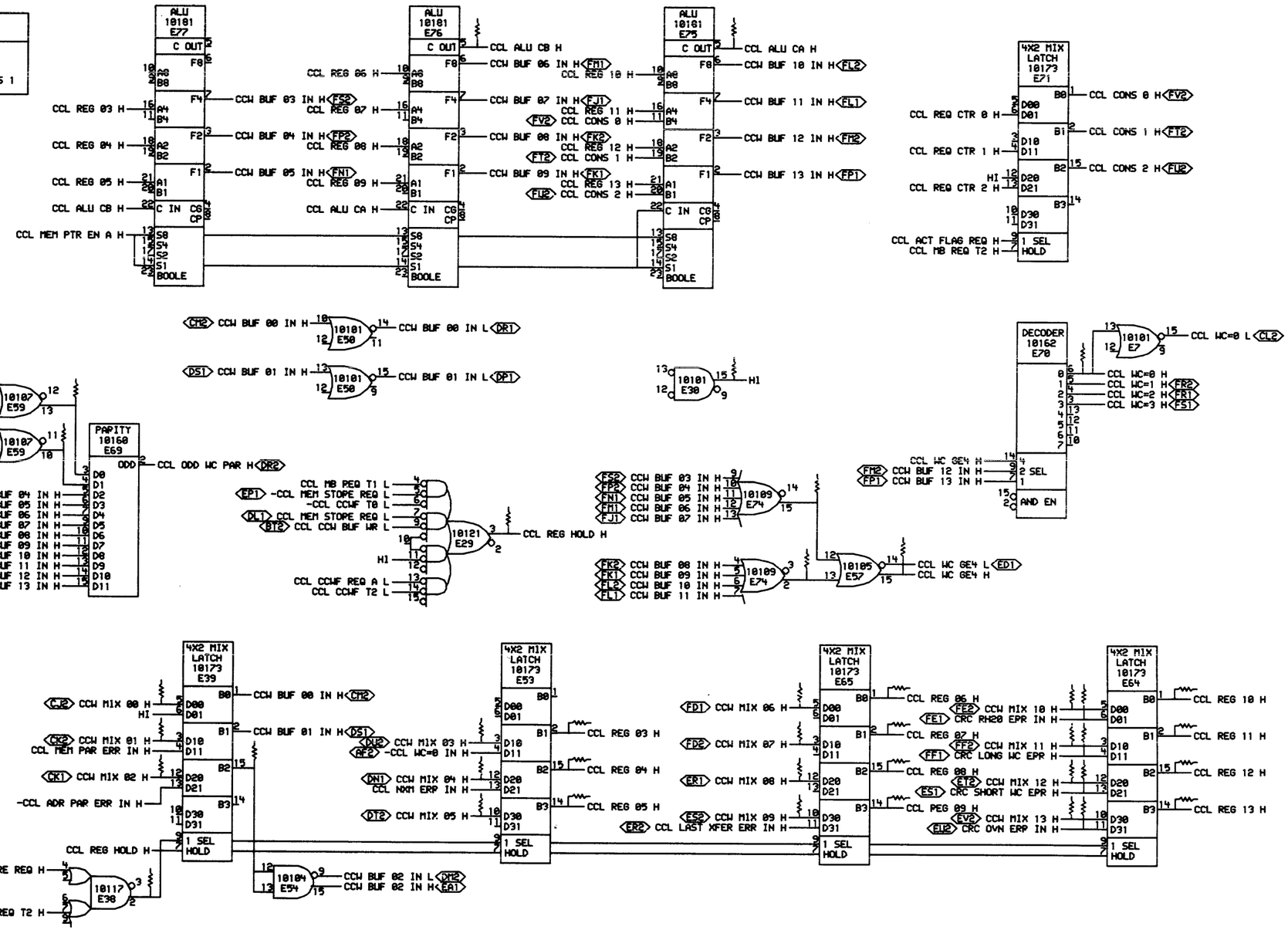

5 OF 7

"THIS DRAWING AND SPECIFICATIONS, HEREIN, ARE THE PROPERTY OF DIGITAL EQUIPMENT CORPORATION AND SHALL NOT BE REPRODUCED OR COPIED OR USED IN WHOLE OR IN PART AS THE BASIS FOR THE MANUFACTURE OR SALE OF ITEMS WITHOUT WRITTEN PERMISSION. COPYRIGHT © 1976, DIGITAL EQUIPMENT CORPORATION"

REVISIONS			CHK	CHANGE NO.	REV.
CHK	CHANGE NO.	REV		M8536-00004	C1
–	M8536-00003	C	R.Q. Johnson 14-JAN-77		
H. SCHWARTZ 6-6-76			M. SCHWARTZ 1-26-77		

digital

DRN. J. Lazarky 22-JUN-76 | ENG. 6/21/76 | TITLE: CHANNEL CONTROL LOGIC

CHK'D. | DATE | BOARD LOCATION: 4F11 | SHEET 1 OF 1

CCL5EX.DRW[4,4773] 28-MAY-76 13:23 | NEXT HIGHER ASSEMBLY: B-DD-M8536-0

FIRST USED ON OPTION/MODEL: KL10

SIZE	CODE	NUMBER	REV.
D	CS	M8536-0-CCL5	C1

274

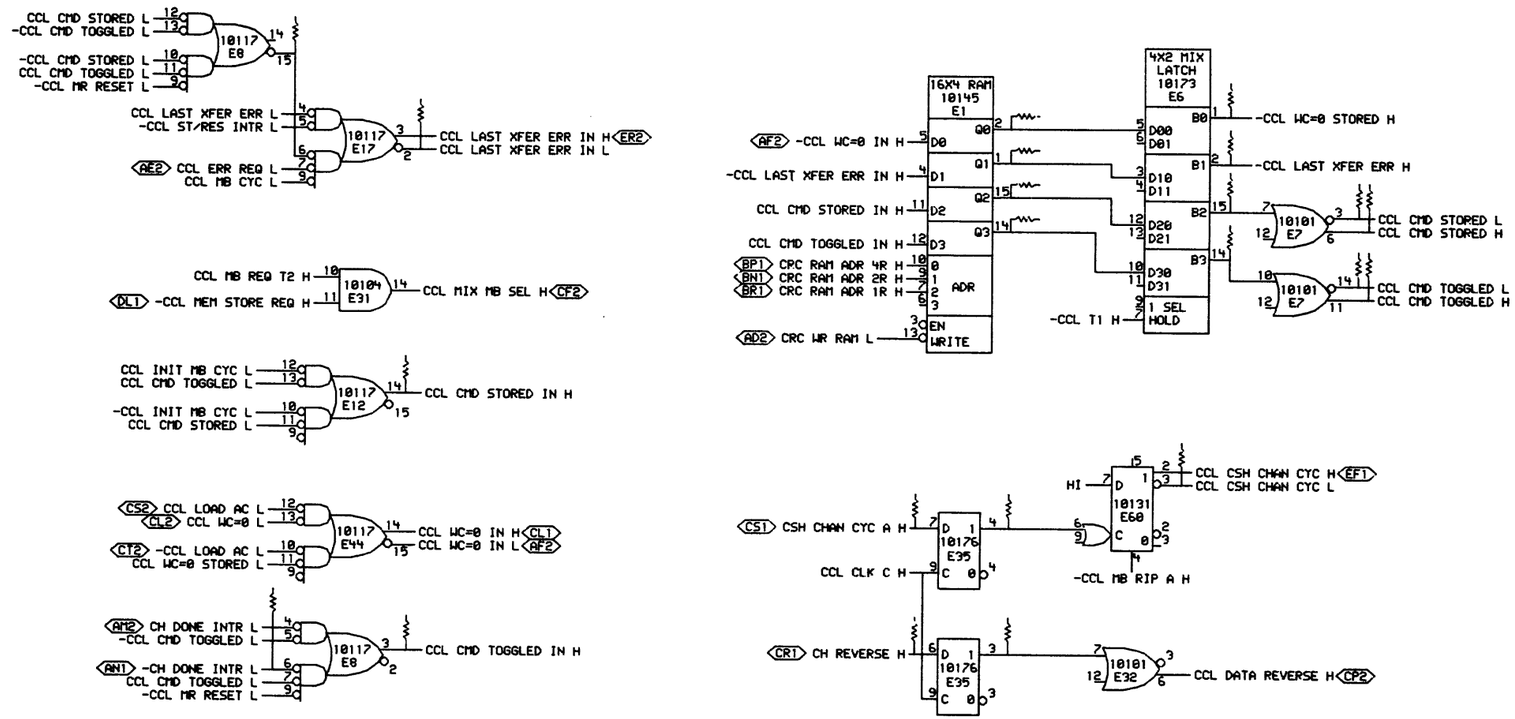

6 OF 7

"THIS DRAWING AND SPECIFICATIONS, HEREIN, ARE THE PROPERTY OF DIGITAL EQUIPMENT CORPORATION AND SHALL NOT BE REPRODUCED OR COPIED OR USED IN WHOLE OR IN PART AS THE BASIS FOR THE MANUFACTURE OR SALE OF ITEMS WITHOUT WRITTEN PERMISSION. COPYRIGHT © 1976, DIGITAL EQUIPMENT CORPORATION"

REVISIONS				
CHK	CHANGE NO.	REV	CHK	CHANGE NO.	REV.
-	M8536-00003	C		M8536-00004	C1
	R.G. Kimmerer 14JAN77				
	M. SCHWARTZ			M. SCHWARTZ	

digital

DRN. J. Toomey DATE 22-JUN-76 ENG. M. Schwartz DATE 6/21/76
CHK'D DATE BOARD LOCATION: 4AF11
CCL6EX.DRW[4,427] 28-MAY-76 13:23 SHEET 1 OF 1
FIRST USED ON OPTION/MODEL: KL10 NEXT HIGHER ASSEMBLY: B-DD-M8536-0

TITLE: CHANNEL CONTROL LOGIC

SIZE	CODE	NUMBER	REV.
D	CS	M8536-0-CCL6	C1

255

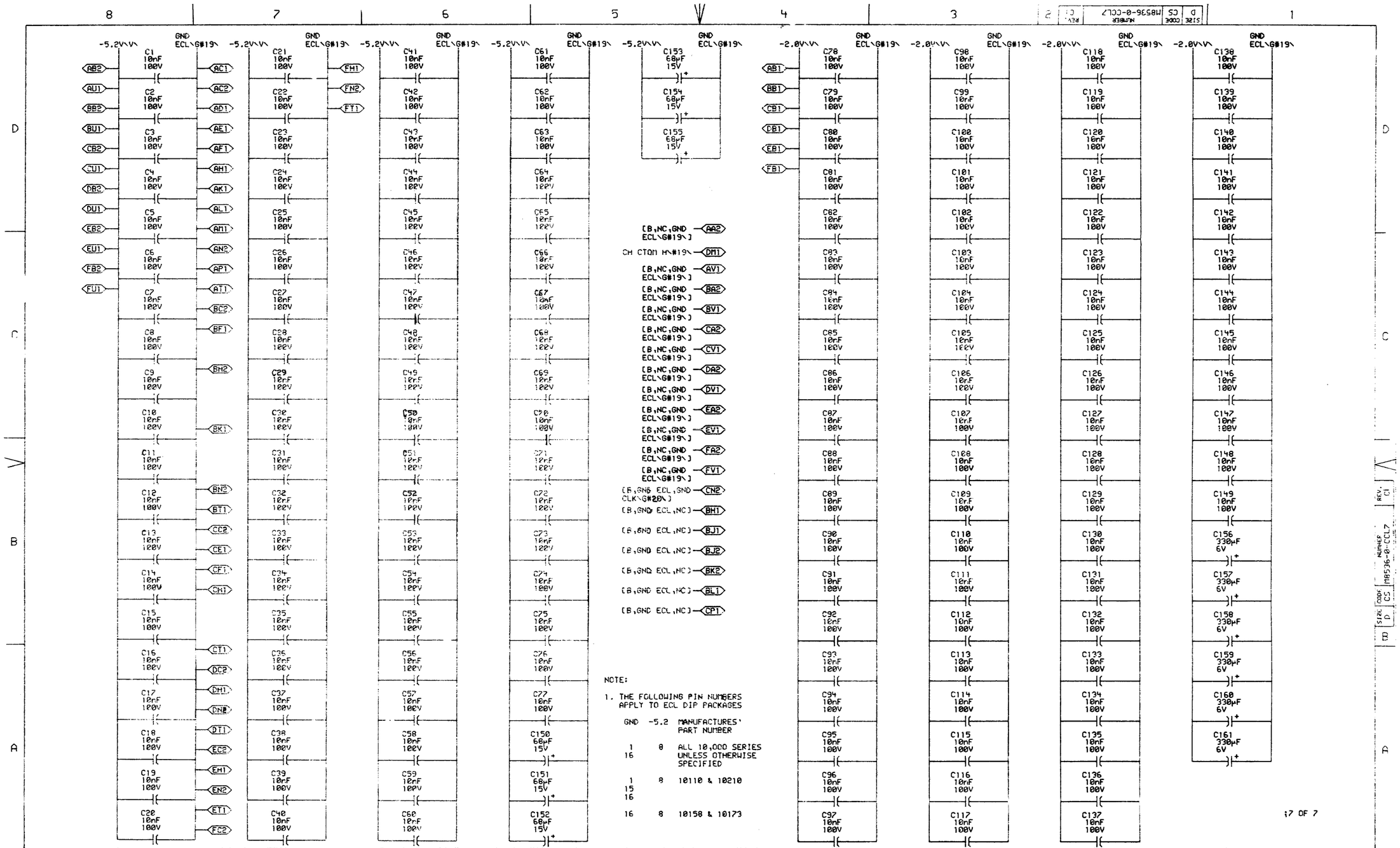

"THIS DRAWING AND SPECIFICATIONS, HEREIN, ARE THE PROPERTY OF DIGITAL EQUIPMENT CORPORATION AND SHALL NOT BE REPRODUCED OR COPIED OR USED IN WHOLE OR IN PART AS THE BASIS FOR THE MANUFACTURE OR SALE OF ITEMS WITHOUT WRITTEN PERMISSION.
COPYRIGHT © 1976, DIGITAL EQUIPMENT CORPORATION"

REVISIONS			CHK	CHANGE NO	REV
CHK	CHANGE NO.	REV		M8536-00004	C1
	M8536-00003	C	R.O. Brunner	14JAN77	
	M. SCHWARTZ		M.SCHWARTZ		

digital

DRN.	DATE 22-JAN-76	ENG.	DATE 6/21/76
CHK'D	DATE	BOARD LOCATION: 4AF11	
		SHEET 1 OF 1	

CCL2EX.PRWC4,477) 28-MAY-76 13:23 NEXT HIGHER ASSEMBLY:
FIRST USED ON OPTION/MODEL: KL10 B-DC-M8536-0

TITLE: CHANNEL CNTRL LGC PWR, CAPS, AND GNDS

SIZE	CODE	NUMBER	REV.
D	CS	M8536-0-CCL7	C1

270

RESISTOR LOC(PIN)	SHOWN DRW#	ON REF	VALUE	TERMINATES SIGNAL
R179(1)	CCL6	C4	68Ω	%E1(1)
R177(1)	CCL6	C4	68Ω	%E1(14)
R181(1)	CCL6	C4	68Ω	%E1(15)
R180(1)	CCL6	D4	68Ω	%E1(2)
R39(1)	CCL6	C7	68Ω	%E17(15)
R19(1)	CCL3	D7	68Ω	%E19(14)
R20(1)	CCL3	D7	68Ω	%E19(15)
R93(1)	CCL1	A5	68Ω	%E2(1)
R95(1)	CCL1	A5	68Ω	%E2(15)
R94(1)	CCL1	A5	68Ω	%E2(2)
R110(1)	CCL4	B2	68Ω	%E23(15)
R21(1)	CCL3	D7	68Ω	%E31(2)
R107(1)	CCL2	C2	68Ω	%E31(3)
R15(1)	CCL3	D6	68Ω	%E34(14)
R131(1)	CCL3	C6	68Ω	%E34(15)
R130(1)	CCL1	C2	68Ω	%E35(14)
R155(1)	CCL6	B4	68Ω	%E35(3)
R161(1)	CCL6	B4	68Ω	%E35(4)
R226(1)	CCL5	A7	68Ω	%E38(2)
R31(1)	CCL5	A6	68Ω	%E39(15)
R202(1)	CCL1	C3	68Ω	%E40(15)
R124(1)	CCL3	C7	68Ω	%E40(2)
R224(1)	CCL3	C2	68Ω	%E42(15)
R13(1)	CCL4	C7	68Ω	%E43(14)
R54(1)	CCL3	B4	68Ω	%E43(2)
R197(1)	CCL4	B5	68Ω	%E45(15)
R34(1)	CCL4	B4	68Ω	%E48(15)
R128(1)	CCL4	A5	68Ω	%E48(2)
R26(1)	CCL4	B7	68Ω	%E49(15)
R222(1)	CCL1	A7	68Ω	%E5(14)
R209(1)	CCL4	D2	68Ω	%E52(14)
R52(1)	CCL3	C4	68Ω	%E54(14)
R122(1)	CCL3	B7	68Ω	%E57(2)
R196(1)	CCL4	A5	68Ω	%E57(7)
R36(1)	CCL2	A5	68Ω	%E58(2)
R221(1)	CCL5	C7	68Ω	%E59(10)
R220(1)	CCL5	C7	68Ω	%E59(13)
R35(1)	CCL2	A5	68Ω	%E59(2)
R147(1)	CCL6	C3	68Ω	%E6(14)
R143(1)	CCL6	C3	68Ω	%E6(15)

RESISTOR LOC(PIN)	SHOWN DRW#	ON REF	VALUE	TERMINATES SIGNAL
R134(1)	CCL4	C5	68Ω	%E61(2)
R127(1)	CCL5	B3	68Ω	%E74(15)
R129(1)	CCL5	B3	68Ω	%E74(2)
R150(1)	CCL6	D7	68Ω	%E8(15)
R84(1)	CCL2	A4	68Ω	-CCL AC=1 H
R86(1)	CCL2	A4	68Ω	CCL AC=3 OR 4 H
R87(1)	CCL2	B4	68Ω	CCL AC=4 H
R16(1)	CCL2	B4	68Ω	CCL ACT FLAG REQ H
R56(1)	CCL2	C4	68Ω	-CCL ACT FLAG REQ A H
R113(1)	CCL2	C6	68Ω	CCL ACT FLAG REQ ENA H
R154(1)	CCL2	C6	68Ω	-CCL ACT FLAG REQ ENA H
R4(1)	CCL1	A4	68Ω	-CCL ADR PAR ERR H
R10(1)	CCL1	C7	68Ω	CCL ADR PAR ERR EN H
R2(1)	CCL1	C7	68Ω	-CCL ADR PAR ERR EN H
R7(1)	CCL1	B7	68Ω	CCL ADR PAR ERR IN H
R25(1)	CCL1	B7	68Ω	-CCL ADR PAR ERR IN H
R120(1)	CCL3	C6	68Ω	CCL AF T0 H
R76(1)	CCL3	C6	68Ω	CCL AF T1 H
R206(1)	CCL3	C6	68Ω	-CCL AF T2 H
R116(1)	CCL4	B4	68Ω	-CCL AF WD READY H
R90(1)	CCL5	D4	68Ω	CCL ALU CA H
R43(1)	CCL5	D5	68Ω	CCL ALU CB H
R6(1)	CCL2	C4	68Ω	-CCL CCWF REQ H
R65(1)	CCL2	C4	68Ω	-CCL CCWF REQ A H
R107(1)	CCL2	C6	68Ω	CCL CCWF REQ ENA H
R157(1)	CCL2	C6	68Ω	-CCL CCWF REQ ENA H
R64(1)	CCL3	D6	68Ω	CCL CCWF T0 H
R153(1)	CCL3	D6	68Ω	-CCL CCWF T0 H
R199(1)	CCL3	D6	68Ω	CCL CCWF T1 H
R200(1)	CCL3	D6	68Ω	CCL CCWF T2 H
R66(1)	CCL3	D6	68Ω	-CCL CCWF T2 H
R126(1)	CCL3	B6	68Ω	CCL CHAN REQ EN H
R125(1)	CCL3	B6	68Ω	-CCL CHAN REQ EN H
R67(1)	CCL1	B2	68Ω	CCL CLK A H
R123(1)	CCL1	B2	68Ω	CCL CLK B H
R201(1)	CCL1	B2	68Ω	CCL CLK C H
R132(1)	CCL1	B2	68Ω	CCL CLK D H
R106(1)	CCL1	B2	68Ω	CCL CLK F H
R96(1)	CCL6	C3	68Ω	CCL CMD STORED H
R97(1)	CCL6	C3	68Ω	-CCL CMD STORED H

RESISTOR LOC(PIN)	SHOWN DRW#	ON REF	VALUE	TERMINATES SIGNAL
R176(1)	CCL6	C6	68Ω	CCL CMD STORED IN H
R98(1)	CCL6	C3	68Ω	CCL CMD TOGGLED H
R100(1)	CCL6	C3	68Ω	-CCL CMD TOGGLED H
R175(1)	CCL6	B6	68Ω	CCL CMD TOGGLED IN H
R205(1)	CCL6	B3	68Ω	-CCL CSH CHAN CYC H
R119(1)	CCL1	C2	68Ω	CCL DATA EN H
R33(1)	CCL1	C2	68Ω	-CCL DATA EN H
R8(1)	CCL1	D7	68Ω	CCL ERR REQ H
R112(1)	CCL2	B6	68Ω	-CCL HOLD MEM H
R142(1)	CCL3	A4	68Ω	CCL INIT MB CYC H
R227(1)	CCL3	A4	68Ω	-CCL INIT MB CYC H
R110(1)	CCL3	C2	68Ω	-CCL INIT RAM REQ H
R149(1)	CCL6	C3	68Ω	-CCL LAST XFER ERR H
R174(1)	CCL6	D6	68Ω	-CCL LAST XFER ERR IN H
R9(1)	CCL1	C2	68Ω	CCL MB CYC H
R55(1)	CCL1	C2	68Ω	-CCL MB CYC H
R3(1)	CCL1	C2	68Ω	-CCL MB CYC A H
R17(1)	CCL1	B6	68Ω	CCL MB CYC DLY H
R103(1)	CCL3	D6	68Ω	-CCL MB CYC T3 H
R59(1)	CCL3	B6	68Ω	-CCL MB REQ T0 H
R14(1)	CCL3	B4	68Ω	CCL MB REQ T1 H
R63(1)	CCL3	B4	68Ω	-CCL MB REQ T1 H
R136(1)	CCL3	B4	68Ω	CCL MB REQ T2 H
R150(1)	CCL3	C6	68Ω	CCL MB RIP A H
R102(1)	CCL3	C6	68Ω	-CCL MB RIP A H
R111(1)	CCL4	B1	68Ω	CCL MB RIP CLR H
R10(1)	CCL4	C1	68Ω	CCL MB RIP IN H
R75(1)	CCL4	C5	68Ω	-CCL MB SEL SUB H
R105(1)	CCL1	D7	68Ω	-CCL MEM ERR H
R50(1)	CCL1	A7	68Ω	CCL MEM ERR CLR H
R49(1)	CCL1	A4	68Ω	-CCL MEM PAR ERR H
R11(1)	CCL1	D7	68Ω	CCL MEM PAR ERR EN H
R50(1)	CCL1	D7	68Ω	-CCL MEM PAR ERR EN H
R23(1)	CCL1	B7	68Ω	CCL MEM PAR ERR IN H
R139(1)	CCL1	B7	68Ω	-CCL MEM PAR ERR IN H
R81(1)	CCL3	D4	68Ω	CCL MEM PTR EN H
R51(1)	CCL3	D4	68Ω	-CCL MEM PTR EN H
R46(1)	CCL3	D3	68Ω	CCL MEM PTR EN A H
R32(1)	CCL2	B4	68Ω	-CCL MEM STORE REQ A H
R114(1)	CCL2	C6	68Ω	-CCL MEM STORE REQ ENA H

RESISTOR LOC(PIN)	SHOWN DRW#	ON REF	VALUE	TERMINATES SIGNAL
R188(1)	CCL1	B2	68Ω	CCL MR RESET H
R88(1)	CCL1	B2	68Ω	-CCL MR RESET H
R53(1)	CCL1	A4	68Ω	-CCL NXM ERR H
R12(1)	CCL1	C7	68Ω	CCL NXM ERR EN H
R48(1)	CCL1	C7	68Ω	-CCL NXM ERR EN H
R70(1)	CCL1	C7	68Ω	CCL NXM ERR IN H
R140(1)	CCL1	C7	68Ω	-CCL NXM ERR IN H
R45(1)	CCL5	A5	68Ω	CCL REG 03 H
R44(1)	CCL5	A5	68Ω	CCL REG 04 H
R42(1)	CCL5	A5	68Ω	CCL REG 05 H
R135(1)	CCL5	B3	68Ω	CCL REG 06 H
R92(1)	CCL5	A3	68Ω	CCL REG 07 H
R91(1)	CCL5	A3	68Ω	CCL REG 08 H
R89(1)	CCL5	A3	68Ω	CCL REG 09 H
R173(1)	CCL5	B2	68Ω	CCL REG 10 H
R172(1)	CCL5	A2	68Ω	CCL REG 11 H
R138(1)	CCL5	A2	68Ω	CCL REG 12 H
R137(1)	CCL5	A2	68Ω	CCL REG 13 H
R210(1)	CCL5	B5	68Ω	CCL REG HOLD H
R208(1)	CCL4	D3	68Ω	CCL REQ CTR 0 H
R210(1)	CCL4	D3	68Ω	CCL REQ CTR 1 H
R133(1)	CCL4	D3	68Ω	CCL REQ CTR 2 H
R160(1)	CCL4	C1	68Ω	CCL REQ CTR=0 H
R77(1)	CCL4	D1	68Ω	-CCL REQ CTR=1 H
R74(1)	CCL4	B2	68Ω	CCL REVERSE H
R40(1)	CCL4	B1	68Ω	-CCL REVERSE H
R115(1)	CCL4	C1	68Ω	CCL RIP INH H
R108(1)	CCL4	C2	68Ω	-CCL RIP INH H
R47(1)	CCL1	A2	68Ω	CCL STARES INTR H
R191(1)	CCL4	B7	68Ω	CCL STORE CCW H
R225(1)	CCL4	B7	68Ω	-CCL STORE CCW H
R71(1)	CCL1	D6	68Ω	-CCL T0 H
R61(1)	CCL1	D5	68Ω	CCL T0 A H
R220(1)	CCL1	D5	68Ω	-CCL T0 A H
R189(1)	CCL1	C5	68Ω	CCL T1 H
R20(1)	CCL1	D6	68Ω	-CCL T1 H
R223(1)	CCL1	C6	68Ω	-CCL T2 H
R72(1)	CCL1	C6	68Ω	-CCL T3 H
R184(1)	CCL1	B4	68Ω	CCL TERM1
R193(1)	CCL1	B4	68Ω	CCL TERM2

NOTE:

1. ALL TERMINATORS HAVE PIN TWO CONNECTED TO -2.0V AND ARE 5% 1/4WATT UNLESS OTHERWISE SPECIFIED
2. ENTRIES ARE SORTED BY SIGNAL NAME
3. % INDICATES OUTPUT OF DIP LOC AND () INDICATES PIN NUMBER

THIS DRAWING AND SPECIFICATIONS, HEREIN, ARE THE PROPERTY OF DIGITAL EQUIPMENT CORPORATION AND SHALL NOT BE REPRODUCED OR COPIED OR USED IN WHOLE OR IN PART AS THE BASIS FOR THE MANUFACTURE OR SALE OF ITEMS WITHOUT WRITTEN PERMISSION.
COPYRIGHT © 1976, DIGITAL EQUIPMENT CORPORATION

REVISIONS			CHK	CHANGE NO.	REV.
CHK	CHANGE NO.	REV		M8536-00004	B1
—	M8536-00002	B	R.O. Lawson 14JAN77		
H. Sanderson 3-4-76			M.SCHWARTZ		
M.SCHWARTZ					
R. Lawson 2-16-76					

digital

DRN. R. Smith DATE 12-FEB-6
CHK'D. D. Stephenson DATE 2/16/76
ENG. M. Schwartz DATE 2/16/76
M8536I.DRW(4,42") 11-FEB-76 14:23
BOARD LOCATION:
SHEET 1 OF 2
NEXT HIG ER ASSEMBLY.
FIRST USED ON OPTION/MODEL KL10 B-DD-M8536-0

TITLE: CHANNEL CONTROL LOGIC TERMINATORS

SIZE	CODE	NUMBER	REV.
D	CS	M8536-0-RES	B1

277

RESISTOR LOC(PIN)	SHOWN ON DRW#	REF	VALUE	TERMINATES SIGNAL
R171(1)	CCL5	B3	68Ω	CCL WC GE4 H
R144(1)	CCL5	C2	68Ω	CCL WC=0 H
R29(1)	CCL6	D3	68Ω	-CCL WC=0 STORED H
R203(1)	CCL4	A1	68Ω	-CCL WD TAKEN H
R121(1)	CCL3	A7	68Ω	CCL ZERO FILL REQ H
R148(1)	CCL2	C7	68Ω	CCW ACT FLAG REQ ENA H
R151(1)	CCL2	C7	68Ω	CCW CCWF REQ ENA H
R 0(1)	CCL3	A7	68Ω	-CCW MEM ADR=0 H
R152(1)	CCL2	C7	68Ω	CCW MEM STORE ENA H
R24(1)	CCL5	B7	68Ω	CCW MIX 00 H
R27(1)	CCL5	A7	68Ω	CCW MIX 01 H
R22(1)	CCL5	A7	68Ω	CCW MIX 02 H
R79(1)	CCL5	A5	68Ω	CCW MIX 03 H
R73(1)	CCL5	A5	68Ω	CCW MIX 04 H
R80(1)	CCL5	A5	68Ω	CCW MIX 05 H
R169(1)	CCL5	B3	68Ω	CCW MIX 06 H
R168(1)	CCL5	A3	68Ω	CCW MIX 07 H
R166(1)	CCL5	A3	68Ω	CCW MIX 08 H
R170(1)	CCL5	A3	68Ω	CCW MIX 09 H
R214(1)	CCL5	B2	68Ω	CCW MIX 10 H
R216(1)	CCL5	A2	68Ω	CCW MIX 11 H
R211(1)	CCL5	A2	68Ω	CCW MIX 12 H
R213(1)	CCL5	A2	68Ω	CCW MIX 13 H
R62(1)	CCL3	D8	68Ω	-CCW WD READY H
R69(1)	CCL4	B7	68Ω	-CH CTOM H
R164(1)	CCL1	D1	68Ω	-CH DIAG 04 H
R165(1)	CCL1	D1	68Ω	-CH DIAG 05 H
R163(1)	CCL1	D1	68Ω	-CH DIAG 06 H
R162(1)	CCL1	D1	68Ω	-CH DIAG READ A H
R99(1)	CCL6	B7	68Ω	CH DONE INTR H
R198(1)	CCL6	B4	68Ω	CH REVERSE H
R103(1)	CCL1	D6	68Ω	-CH T0 H
R101(1)	CCL1	C6	68Ω	-CH T1 H
R109(1)	CCL1	C6	68Ω	-CH T2 H
R104(1)	CCL1	D6	68Ω	-CH T3 H
R1(1)	CCL1	C8	68Ω	-CHAN ADR PAR ERR H
R5(1)	CCL1	C8	68Ω	-CHAN NXM ERR H
R60(1)	CCL1	D8	68Ω	-CHAN PAR ERR H
R117(1)	CCL1	B2	68Ω	CLK CCL H
R85(1)	CCL4	D3	68Ω	CRC ACT CTR 0 H

RESISTOR LOC(PIN)	SHOWN ON DRW#	REF	VALUE	TERMINATES SIGNAL
R83(1)	CCL2	A5	68Ω	CRC ACT CTR 1 H
R37(1)	CCL2	A5	68Ω	CRC ACT CTR 2 H
R82(1)	CCL2	A5	68Ω	-CRC ACT CTR 2R H
R217(1)	CCL5	A2	68Ω	CRC LONG WC ERR H
R156(1)	CCL1	C3	68Ω	CRC MB CYC H
R57(1)	CCL3	D4	68Ω	-CRC MB CYC H
R215(1)	CCL5	A2	68Ω	CRC OVN ERR IN H
R145(1)	CCL1	A5	68Ω	CRC RAM ADR 1R H
R146(1)	CCL1	A5	68Ω	CRC RAM ADR 2R H
R141(1)	CCL1	A5	68Ω	CRC RAM ADR 4R H
R190(1)	CCL2	C2	68Ω	-CRC RAM CYC H
R204(1)	CCL4	B5	68Ω	CRC REQ D H
R192(1)	CCL3	C2	68Ω	-CRC REQ E H
R178(1)	CCL3	D2	68Ω	-CRC RESET H
R219(1)	CCL5	B2	68Ω	CRC R420 ERR IN H
R212(1)	CCL5	A2	68Ω	CRC SHORT WC ERR H
R207(1)	CCL6	B4	68Ω	CSH CHAN CYC A H
R167(1)	CCL5	C4	68Ω	HI

NOTE:

1. ALL TERMINATORS HAVE PIN TWO CONNECTED TO -2.0V AND ARE 5% 1/4WATT UNLESS OTHERWISE SPECIFIED
2. ENTRIES ARE SORTED BY SIGNAL NAME
3. % INDICATES OUTPUT OF DIP LOC AND
   () INDICATES PIN NUMBER

"THIS DRAWING AND SPECIFICATIONS, HEREIN, ARE THE PROPERTY OF DIGITAL EQUIPMENT CORPORATION AND SHALL NOT BE REPRODUCED OR COPIED OR USED IN WHOLE OR IN PART AS THE BASIS FOR THE MANUFACTURE OR SALE OF ITEMS WITHOUT WRITTEN PERMISSION.
COPYRIGHT © 1976, DIGITAL EQUIPMENT CORPORATION"

REVISIONS		
CHK	CHANGE NO.	REV

CHK	CHANGE NO	REV.
	M8536-00004	E
R.O.K.	14/1/77	
M.S.		E

digital

DR: C. Smith 12-FEB-76
CHK'D: 3/16/76
M853C2.DRW[4,42] 12-FEB 76 14:24
FIRST USED ON OPTION MODEL: KL10

ENG. 2/19/76
BOARD LOCATION:
SHEET 2 OF 2
NEXT HIGHER ASSEMBLY: B-DD-M8536-0

TITLE: CHANNEL CONTROL LOGIC TERMINATORS

SIZE	CODE	NUMBER	REV.
D	CS	M8536-0-RES	B1

2>8

REVISION CONTROL SHEET

CUSTOMER PRINT SET	MFG SET	DRAWING NO	NO OF SHT	DESCRIPTION	OPTION NO/FILE DATE	REVISIONS A	B	C	D	E
			-	MODULE REVISION						
		D-UA-M8536-Ø-Ø	5	CHANNEL CONTROL LOGIC		-	A	B	C	D
		D-CS-M8536-Ø-CCL1	1	CHANNEL CONTROL LOGIC		-	A	B	C	D
		D-CS-M8536-Ø-CCL2	1	CHANNEL CONTROL LOGIC		-	A	A	B	C
		D-CS-M8536-Ø-CCL3	1	CHANNEL CONTROL LOGIC		-	A	A	B	C
		D-CS-M8536-Ø-CCL4	1	CHANNEL CONTROL LOGIC		-	A	B	C	D
		D-CS-M8536-Ø-CCL5	1	CHANNEL CONTROL LOGIC		-	A	B	C	D
		D-CS-M8536-Ø-CCL6	1	CHANNEL CONTROL LOGIC		-	A	B	C	D
		D-CS-M8536-Ø-CCL7	1	CHANNEL CNTRL LGC PWR, CAPS, AND GNDS		-	A	B	C	D
		D-CS-M8536-Ø-RES	2	CHAN CNTRL LOGIC TERM.		-	A	B	B	C
		K-CO-M8536-Ø-4	1	CHANNEL CONTROL LOGIC (CALDEC DATA BASE)		B	B	B	B	C
		D-AH-M8536-Ø-5	4	CHANNEL CONTROL LOGIC		A	A	A	A	B
		B-MH-M8536-Ø-6	1	MODULE ECO HISTORY		REF	-	-	-	A
		5010926	-	ETCH CIRCUIT BOARD			B	B	B	C
		P00-M8536-ØØ		PROCESS SHEET (REF ONLY)			-			
					ECO NO	ORIG	00001	00002	00003	00004
										NEW RELAYOUT VERSION

CUSTOMER PRINT SET CODES
X = PRINT OF DOCUMENT INCLUDED IN PRINT SET
C = INCLUDES ALL PRINTS INDICATED ON DOCUMENT
S = CONFIDENTIAL AUTHORIZED SIGNATURE REQUIRED

TITLE	SHEET	SIZE	CODE	NUMBER	REV
CHANNEL CONTROL LOGIC	SHEET 3 OF 3	B	DD	M8536-Ø	D

MR

"THIS DRAWING AND SPECIFICATIONS, HEREIN, ARE THE PROPERTY OF DIGITAL EQUIPMENT CORPORATION AND SHALL NOT BE REPRODUCED OR COPIED OR USED IN WHOLE OR IN PART AS THE BASIS FOR THE MANUFACTURE OR SALE OF ITEMS WITHOUT WRITTEN PERMISSION. COPYRIGHT © 1976 DIGITAL EQUIPMENT CORPORATION"

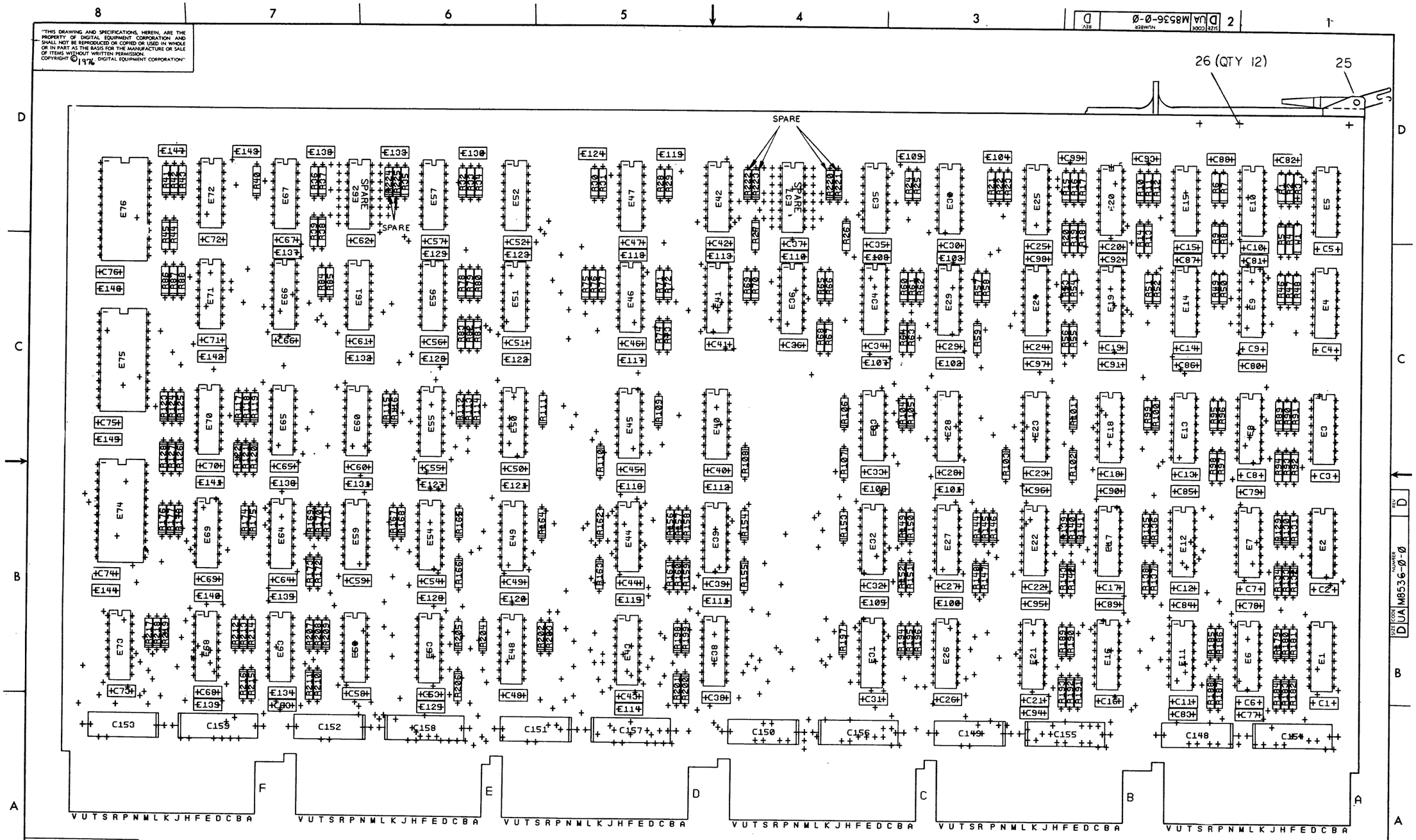
26 (QTY 12)
25
SPARE
SPARE
SPARE

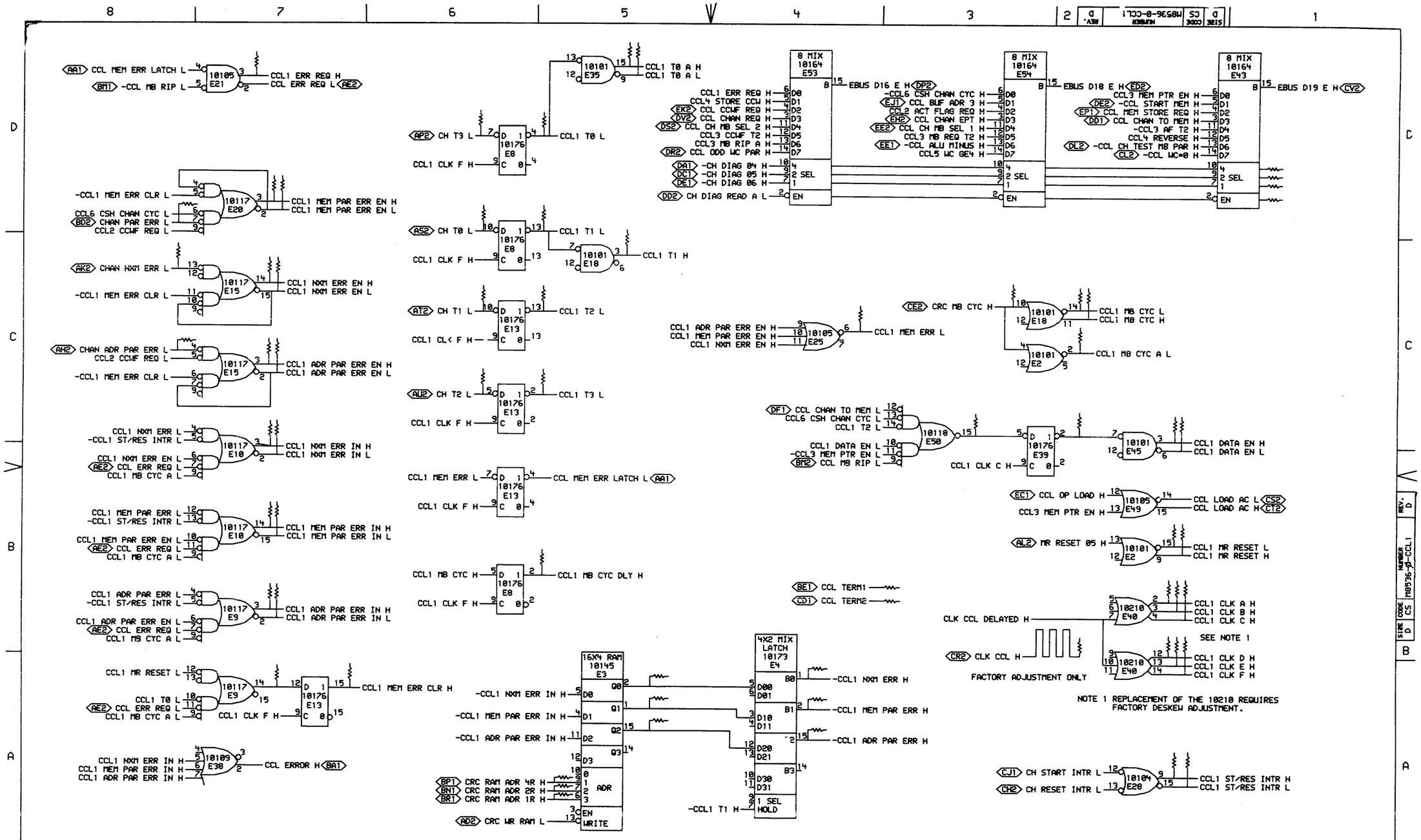

1 OF 7

"THIS DRAWING AND SPECIFICATIONS, HEREIN, ARE THE PROPERTY OF DIGITAL EQUIPMENT CORPORATION AND SHALL NOT BE REPRODUCED OR COPIED OR USED IN WHOLE OR IN PART AS THE BASIS FOR THE MANUFACTURE OR SALE OF ITEMS WITHOUT WRITTEN PERMISSION.
COPYRIGHT © 1976, DIGITAL EQUIPMENT CORPORATION"

REVISIONS		
CHK	CHANGE NO.	REV

digital

DRN. DATE 25-OCT-76 ENG. DATE 11/29/76
CHK'D DATE 10/29/76 BOARD LOCATION: 4AF11
SHEET 1 OF 1
CCL1ES.DRW[4,175] 13-OCT-76 14:32
FIRST USED ON OPTION/MODEL: KL10
NEXT HIGHER ASSEMBLY: B-DD-M8536-0

TITLE: CHANNEL CONTROL LOGIC

SIZE	CODE	NUMBER	REV.
D	CS	M8536-0-CCL1	D

281

1 MR

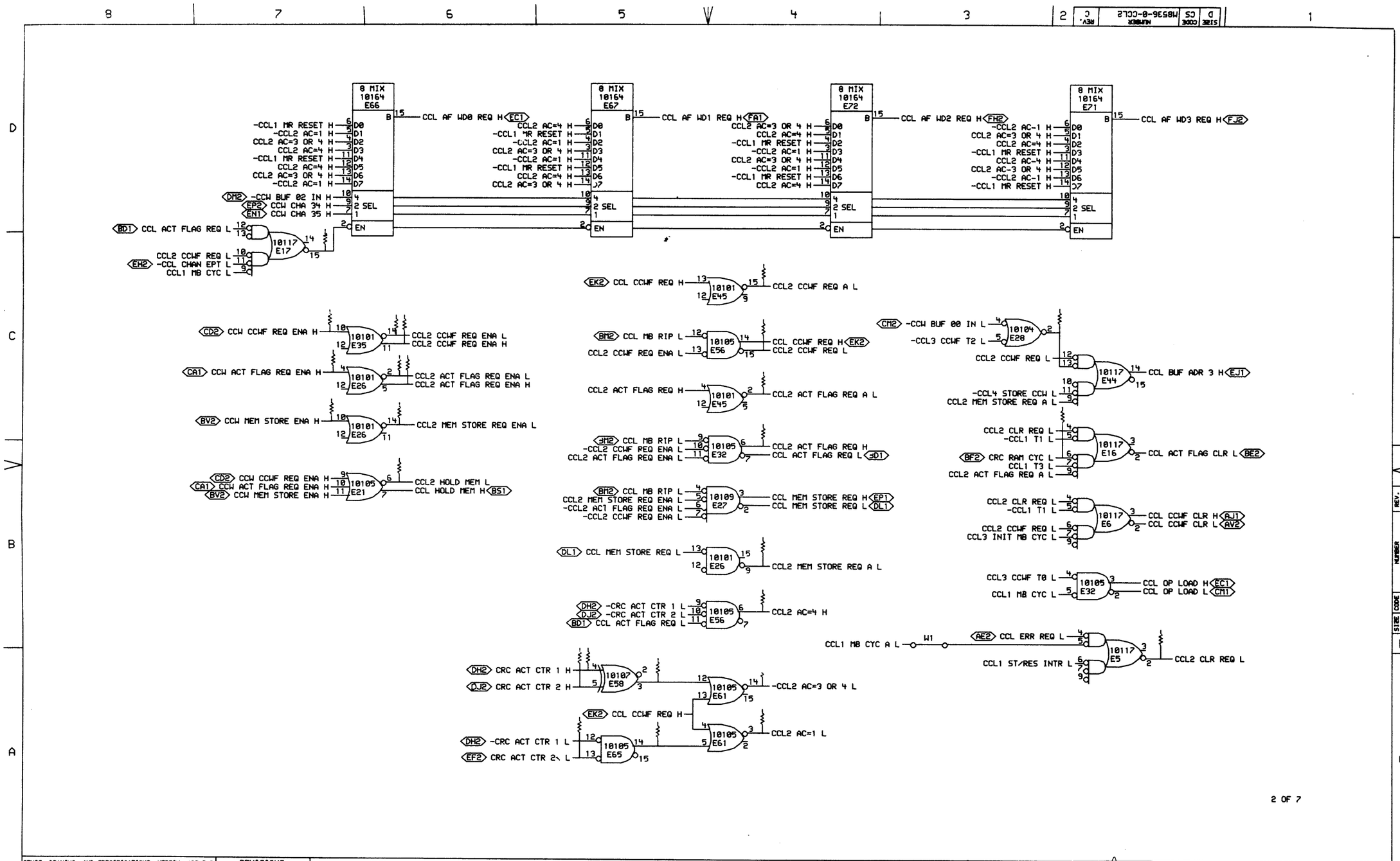

"THIS DRAWING AND SPECIFICATIONS, HEREIN, ARE THE PROPERTY OF DIGITAL EQUIPMENT CORPORATION AND SHALL NOT BE REPRODUCED OR COPIED OR USED IN WHOLE OR IN PART AS THE BASIS FOR THE MANUFACTURE OR SALE OF ITEMS WITHOUT WRITTEN PERMISSION.
COPYRIGHT © 1976, DIGITAL EQUIPMENT CORPORATION"

REVISIONS		
CHK	CHANGE NO.	REV

digital

DRN. L. Loosley DATE 01-NOV-76 ENG. DATE 11/2/76
CHK. DATE 11/2/76 BOARD LOCATION: 4F11
SHEET 1 OF 1
CCL2ES.DRW[4,175] 01-NOV-76 15:56 NEXT HIGHER ASSEMBLY: B-DD-M8536-0
FIRST USED ON OPTION/MODEL: KL10

TITLE: CHANNEL CONTROL LOGIC

SIZE	CODE	NUMBER	REV.
D	CS	M8536-0-CCL2	C

MR 1

297

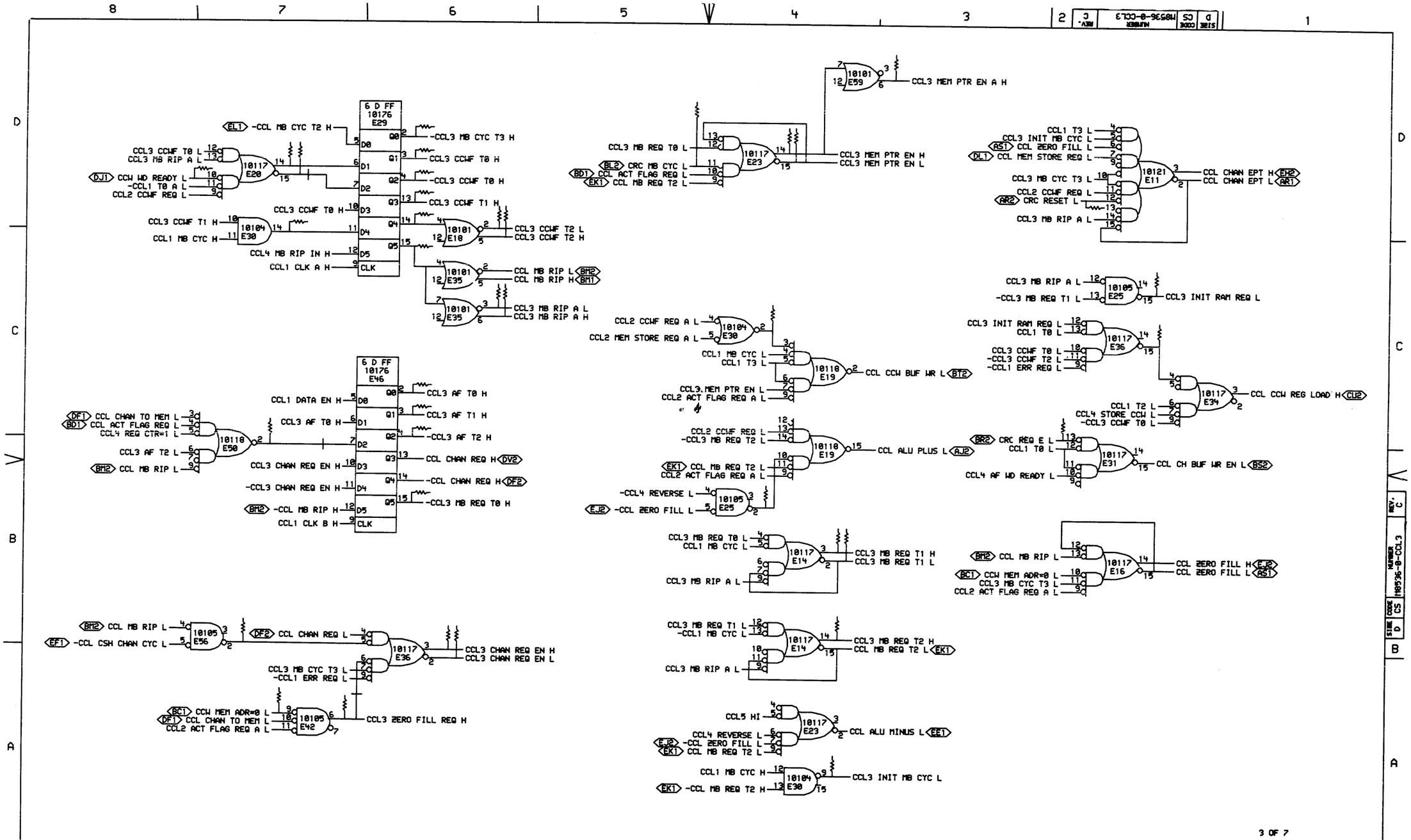

"THIS DRAWING AND SPECIFICATIONS, HEREIN, ARE THE PROPERTY OF DIGITAL EQUIPMENT CORPORATION AND SHALL NOT BE REPRODUCED OR COPIED OR USED IN WHOLE OR IN PART AS THE BASIS FOR THE MANUFACTURE OR SALE OF ITEMS WITHOUT WRITTEN PERMISSION. COPYRIGHT © 1976, DIGITAL EQUIPMENT CORPORATION"

REVISIONS		
CHK	CHANGE NO.	REV

digital

DWN. DATE 23-OCT-76
CHK'D DATE
ENG. DATE
BOARD LOCATIONS: 4A-E11
SHEET 1 OF 1
CCL3ES.DRW(4.1751) 12-SEP-76 11:49
NEXT HIGHER ASSEMBLY: B-DD-M8536-0
FIRST USED ON OPTION/MODEL: KL10

TITLE: CHANNEL CONTROL LOGIC

SIZE	CODE	NUMBER	REV.
D	CS	M8536-0-CCL3	C

283

1 MR

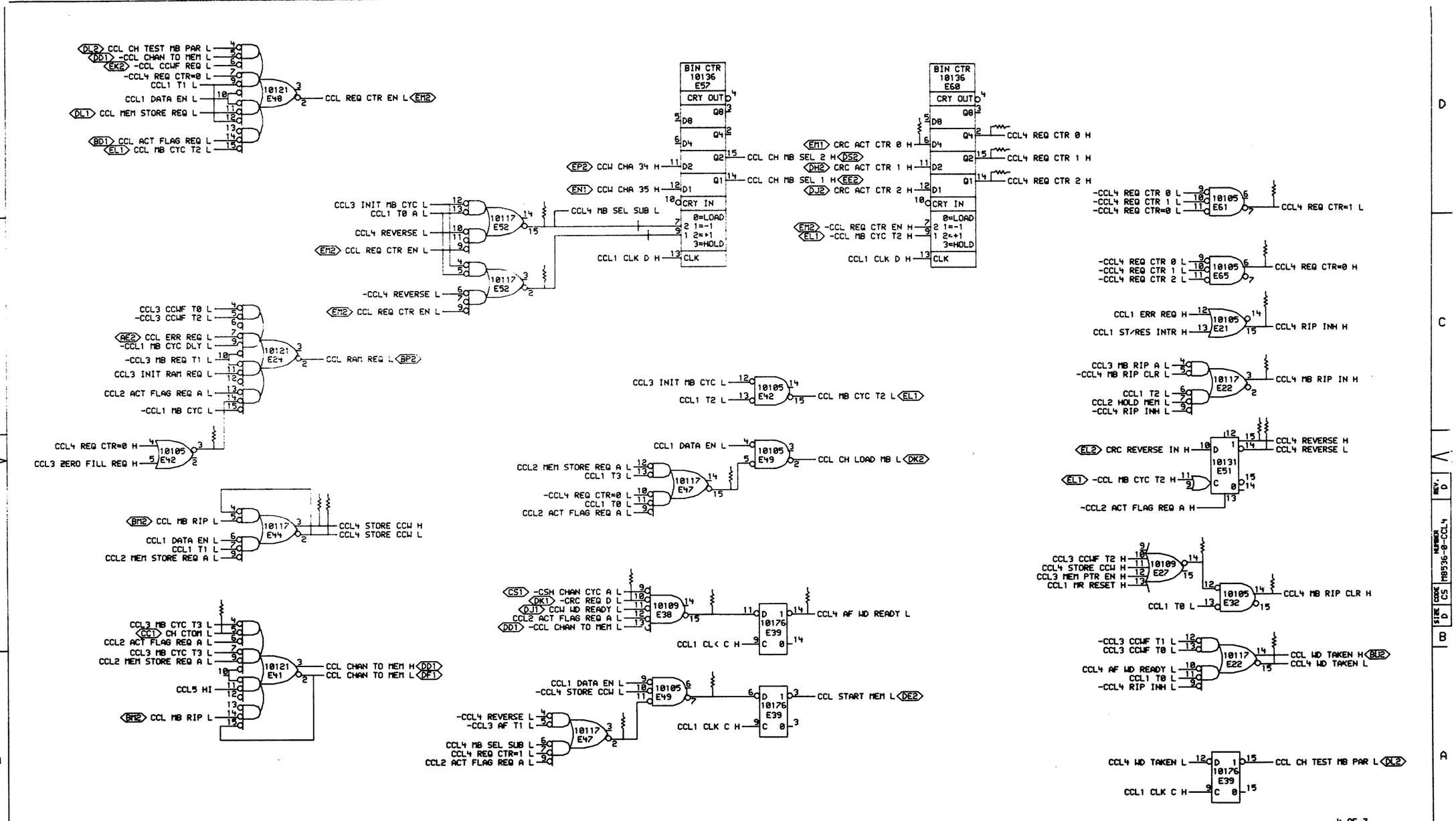

"THIS DRAWING AND SPECIFICATIONS, HEREIN, ARE THE PROPERTY OF DIGITAL EQUIPMENT CORPORATION AND SHALL NOT BE REPRODUCED OR COPIED OR USED IN WHOLE OR IN PART AS THE BASIS FOR THE MANUFACTURE OR SALE OF ITEMS WITHOUT WRITTEN PERMISSION.
COPYRIGHT © 1976, DIGITAL EQUIPMENT CORPORATION"

REVISIONS		
CHK	CHANGE NO.	REV

digital

DRN. S. Lanley DATE 25-OCT-76 ENG. DATE
CHK'D. DATE BOARD LOCATION: 4A11
CCL4ES.DRW[4,175] 20-SEP-76 11:59 SHEET 1 OF 1 NEXT HIGHER ASSEMBLY:
FIRST USED ON OPTION/MODEL: KL10 B-DD-M8536-0

TITLE: CHANNEL CONTROL LOGIC

SIZE	CODE	NUMBER	REV.
D	CS	M8536-0-CCL4	D

284

S1	S8	ALU OPERATION
L	L	A PLUS 0
H	H	A MINUS B MINUS 1

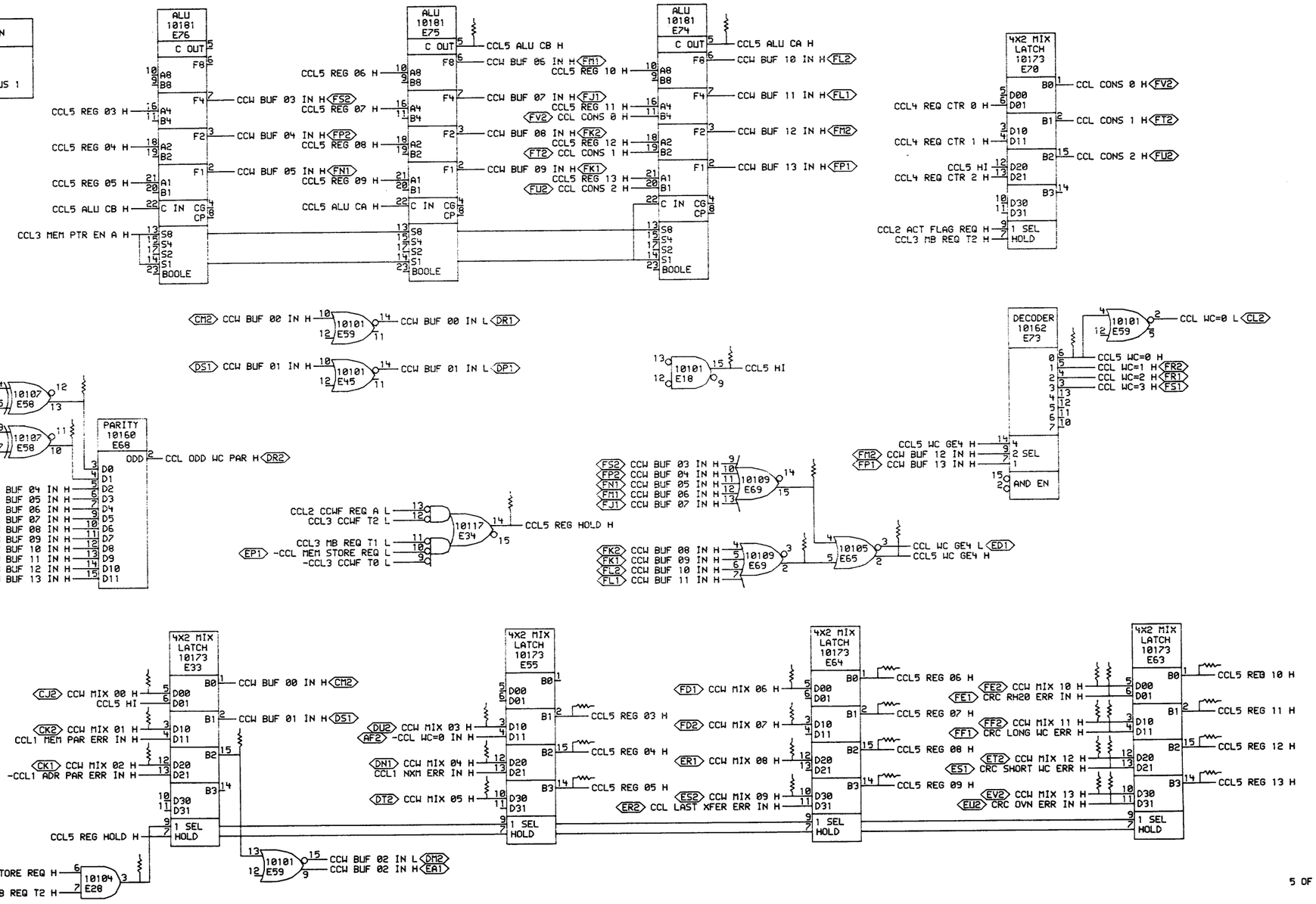

"THIS DRAWING AND SPECIFICATIONS, HEREIN, ARE THE PROPERTY OF DIGITAL EQUIPMENT CORPORATION AND SHALL NOT BE REPRODUCED OR COPIED OR USED IN WHOLE OR IN PART AS THE BASIS FOR THE MANUFACTURE OR SALE OF ITEMS WITHOUT WRITTEN PERMISSION.
COPYRIGHT © 1976, DIGITAL EQUIPMENT CORPORATION"

REVISIONS		
CHK	CHANGE NO.	REV

digital

DRN. 27-OCT-76 | ENG. 11/12/76 | TITLE: CHANNEL CONTROL LOGIC

CHK'D 12/76 | DATE 12/SEP-76 12:48 | BOARD LOCATION: 4A11 | SHEET 1 OF 1

CCL5ES.DRW[4,1751]

FIRST USED ON OPTION/MODEL: KL10 | NEXT HIGHER ASSEMBLY: B-DD-M8536-0

SIZE	CODE	NUMBER	REV.
D	CS	M8536-0-CCL5	D

285

1 MR

STEPHENSON, CCL5ES.DRW[4,1751], SCALE 2, "D" RELEASE

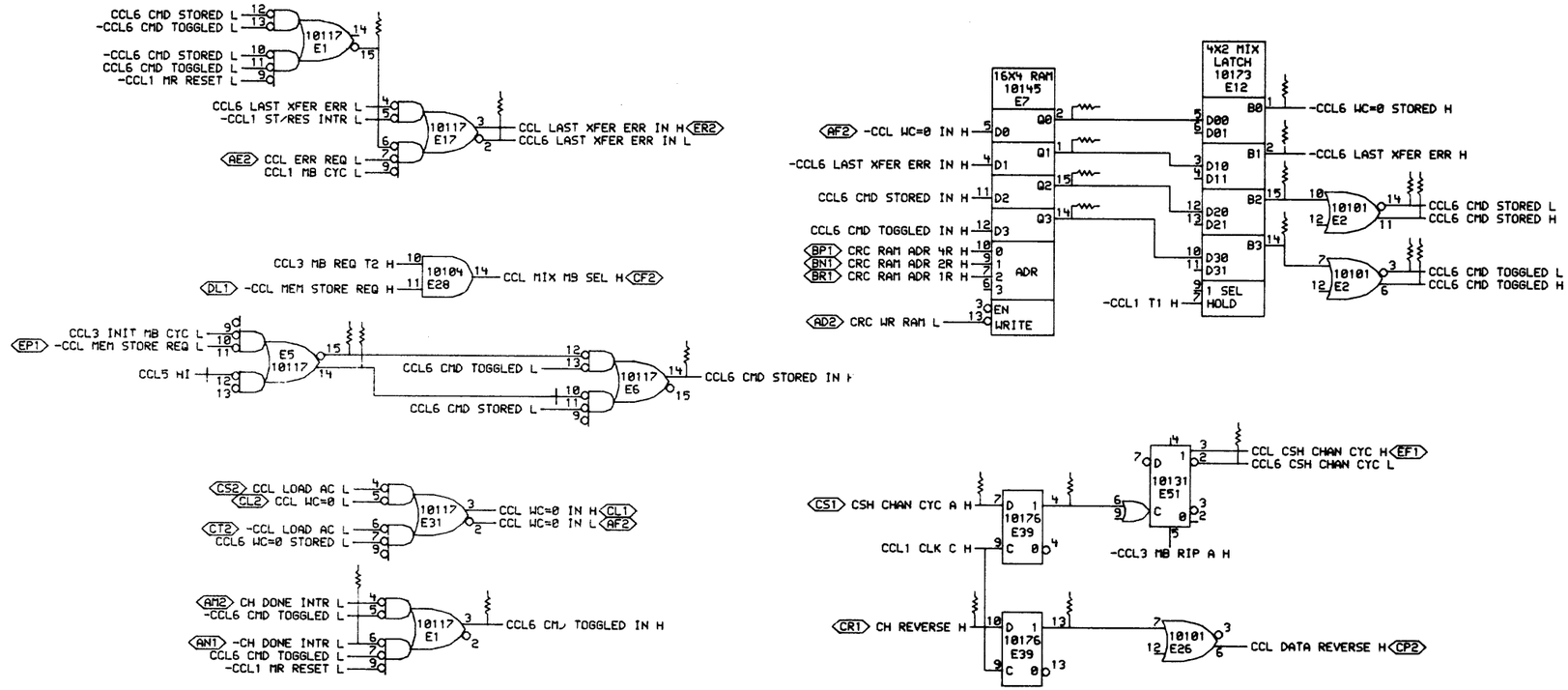

6 OF 7

"THIS DRAWING AND SPECIFICATIONS, HEREIN, ARE THE PROPERTY OF DIGITAL EQUIPMENT CORPORATION AND SHALL NOT BE REPRODUCED OR COPIED OR USED IN WHOLE OR IN PART AS THE BASIS FOR THE MANUFACTURE OR SALE OF ITEMS WITHOUT WRITTEN PERMISSION.
COPYRIGHT © 1976, DIGITAL EQUIPMENT CORPORATION"

REVISIONS		
CHK	CHANGE NO.	REV

digital

DRN. Tomsky DATE 23-OCT-76 ENG. DATE
CHK. DATE BOARD LOCATION: SHEET 1 OF 1
CCL6ES.DRW(4,175) 28-SEP-76 12:50 NEXT HIGHER ASSEMBLY: B-DD-M8536-0
FIRST USED ON OPTION/MODEL: KL10

TITLE: CHANNEL CONTROL LOGIC

SIZE	CODE	NUMBER	REV.
D	CS	M8536-0-CCL6	D

286

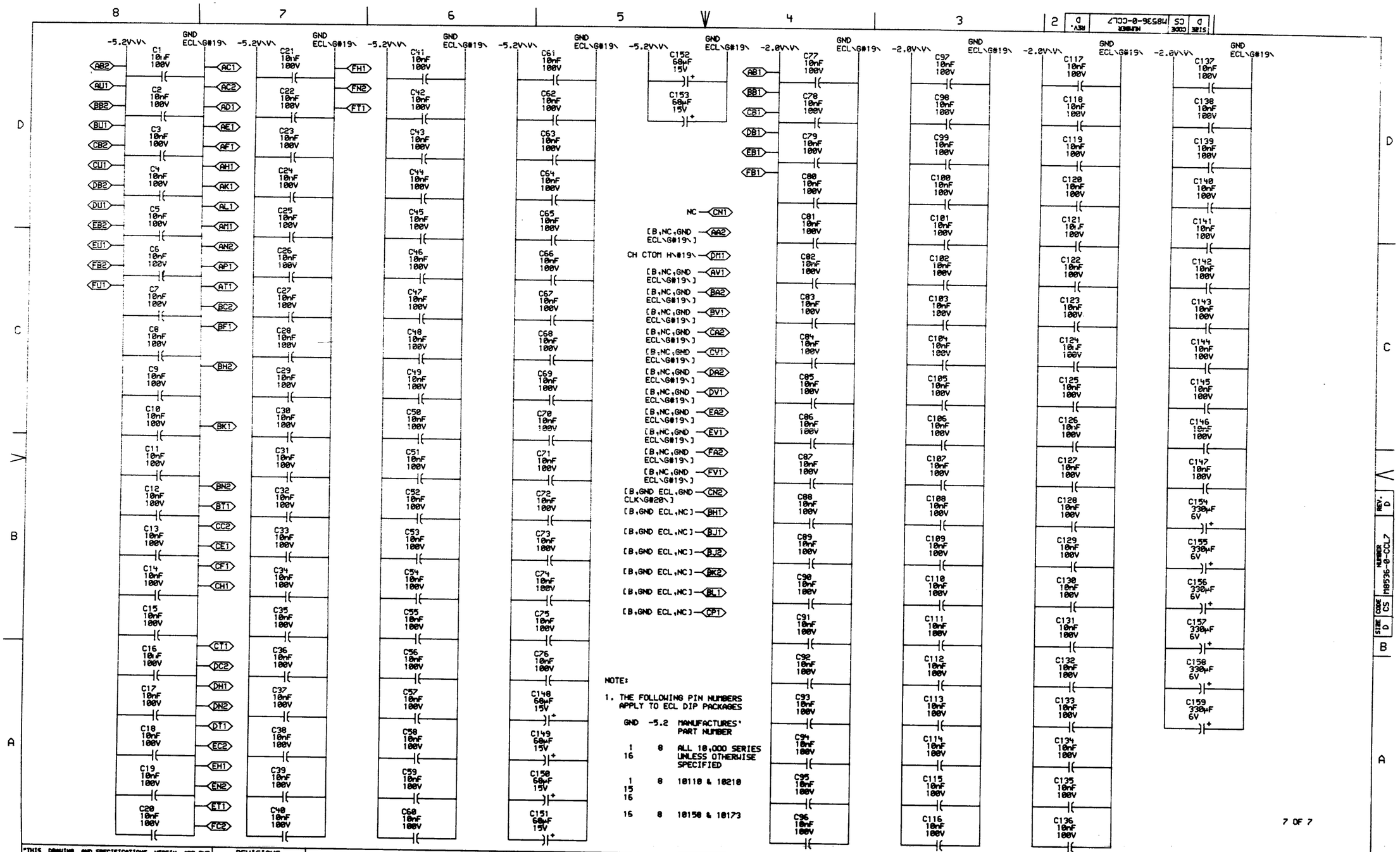
-5.2V\V\
GND ECL\G#19\
-2.0V\V\
C1 10uF 100V
C2 10nF 100V
C3 10nF 100V
C4 10nF 100V
C5 10nF 100V
C6 10nF 100V
C7 10nF 100V
C8 10nF 100V
C9 10nF 100V
C10 10nF 100V
C11 10nF 100V
C12 10nF 100V
C13 10nF 100V
C14 10nF 100V
C15 10nF 100V
C16 10uF 100V
C17 10nF 100V
C18 10nF 100V
C19 10nF 100V
C20 10nF 100V
C21 10nF 100V
C22 10nF 100V
C23 10nF 100V
C24 10nF 100V
C25 10nF 100V
C26 10nF 100V
C27 10nF 100V
C28 10nF 100V
C29 10nF 100V
C30 10nF 100V
C31 10nF 100V
C32 10nF 100V
C33 10nF 100V
C34 10nF 100V
C35 10nF 100V
C36 10nF 100V
C37 10nF 100V
C38 10nF 100V
C39 10nF 100V
C40 10nF 100V
C41 10nF 100V
C42 10nF 100V
C43 10nF 100V
C44 10nF 100V
C45 10nF 100V
C46 10nF 100V
C47 10nF 100V
C48 10nF 100V
C49 10nF 100V
C50 10nF 100V
C51 10nF 100V
C52 10nF 100V
C53 10nF 100V
C54 10nF 100V
C55 10nF 100V
C56 10nF 100V
C57 10nF 100V
C58 10nF 100V
C59 10nF 100V
C60 10nF 100V
C61 10nF 100V
C62 10nF 100V
C63 10nF 100V
C64 10nF 100V
C65 10nF 100V
C66 10nF 100V
C67 10nF 100V
C68 10nF 100V
C69 10nF 100V
C70 10nF 100V
C71 10nF 100V
C72 10nF 100V
C73 10nF 100V
C74 10nF 100V
C75 10nF 100V
C76 10nF 100V
C148 68uF 15V
C149 68uF 15V
C150 68uF 15V
C151 68uF 15V
C152 68uF 15V
C153 68uF 15V
C77 10nF 100V
C78 10nF 100V
C79 10nF 100V
C80 10nF 100V
C81 10nF 100V
C82 10nF 100V
C83 10nF 100V
C84 10nF 100V
C85 10nF 100V
C86 10nF 100V
C87 10nF 100V
C88 10nF 100V
C89 10nF 100V
C90 10nF 100V
C91 10nF 100V
C92 10nF 100V
C93 10nF 100V
C94 10nF 100V
C95 10nF 100V
C96 10nF 100V
C97 10nF 100V
C98 10nF 100V
C99 10nF 100V
C100 10nF 100V
C101 10nF 100V
C102 10nF 100V
C103 10nF 100V
C104 10nF 100V
C105 10nF 100V
C106 10nF 100V
C107 10nF 100V
C108 10nF 100V
C109 10nF 100V
C110 10nF 100V
C111 10nF 100V
C112 10nF 100V
C113 10nF 100V
C114 10nF 100V
C115 10nF 100V
C116 10nF 100V
C117 10nF 100V
C118 10nF 100V
C119 10nF 100V
C120 10nF 100V
C121 10uF 100V
C122 10nF 100V
C123 10nF 100V
C124 10uF 100V
C125 10nF 100V
C126 10nF 100V
C127 10nF 100V
C128 10nF 100V
C129 10nF 100V
C130 10nF 100V
C131 10nF 100V
C132 10nF 100V
C133 10nF 100V
C134 10nF 100V
C135 10nF 100V
C136 10nF 100V
C137 10nF 100V
C138 10nF 100V
C139 10nF 100V
C140 10nF 100V
C141 10nF 100V
C142 10nF 100V
C143 10nF 100V
C144 10nF 100V
C145 10nF 100V
C146 10nF 100V
C147 10nF 100V
C154 330uF 6V
C155 330uF 6V
C156 330uF 6V
C157 330uF 6V
C158 330uF 6V
C159 330uF 6V
AB2
AU1
BB2
BU1
CB2
CU1
DB2
DU1
EB2
EU1
FB2
FU1
AC1
AC2
AD1
AE1
AF1
AH1
AK1
AL1
AM1
AN2
AP1
AT1
BC2
BF1
BH2
BK1
BN2
BT1
CC2
CE1
CF1
CH1
CT1
DC2
DH1
DN2
DT1
EC2
EH1
EN2
ET1
FC2
FH1
FN2
FT1
AB1
BB1
CB1
DB1
EB1
FB1
NC CN1
[B,NC,GND ECL\G#19\] AA2
CH CTOM H\#19\ DM1
[B,NC,GND ECL\G#19\] AV1
[B,NC,GND ECL\G#19\] BA2
[B,NC,GND ECL\G#19\] BV1
[B,NC,GND ECL\G#19\] CA2
[B,NC,GND ECL\G#19\] CV1
[B,NC,GND ECL\G#19\] DA2
[B,NC,GND ECL\G#19\] DV1
[B,NC,GND ECL\G#19\] EA2
[B,NC,GND ECL\G#19\] EV1
[B,NC,GND ECL\G#19\] FA2
[B,NC,GND ECL\G#19\] FV1
[B,GND ECL,GND CLK\G#20\] CN2
[B,GND ECL,NC] BH1
[B,GND ECL,NC] BJ1
[B,GND ECL,NC] BJ2
[B,GND ECL,NC] BK2
[B,GND ECL,NC] BL1
[B,GND ECL,NC] CP1
NOTE:
1. THE FOLLOWING PIN NUMBERS APPLY TO ECL DIP PACKAGES
GND -5.2 MANUFACTURES' PART NUMBER
1 16 8 ALL 10,000 SERIES UNLESS OTHERWISE SPECIFIED
1 15 16 8 10110 & 10210
16 8 10150 & 10173
7 OF 7
SIZE D CODE CS M8536-0-CCL7 REV. D
"THIS DRAWING AND SPECIFICATIONS, HEREIN, ARE THE PROPERTY OF DIGITAL EQUIPMENT CORPORATION AND SHALL NOT BE REPRODUCED OR COPIED OR USED IN WHOLE OR IN PART AS THE BASIS FOR THE MANUFACTURE OR SALE OF ITEMS WITHOUT WRITTEN PERMISSION.
COPYRIGHT © 1976, DIGITAL EQUIPMENT CORPORATION"
REVISIONS
CHK CHANGE NO. REV
digital
DRN. 29-OCT-76
CHK. 29-OCT-76
DATE 29-OCT-76
ENG.
DATE
BOARD LOCATION: 4AF11
SHEET 1 OF 1
CCL/ES,DRW(4,175) 13-OCT-76 13:56
NEXT HIGHER ASSEMBLY: B-DD-M8536-0
FIRST USED ON OPTION/MODEL: KL10
TITLE: CHANNEL CNTRL LGC PWR, CAPS, AND GNDS
SIZE D CODE CS NUMBER M8536-0-CCL7 REV. D

RESISTOR LOC(PIN)	SHOWN ON DRW#	REF	VALUE	TERMINATES SIGNAL
R140(1)	CCL6	D6	68Ω	%E1(15)
R133(1)	CCL6	C3	68Ω	%E12(14)
R132(1)	CCL6	C3	68Ω	%E12(15)
R40(1)	CCL2	C7	68Ω	%E17(15)
R62(1)	CCL3	D7	68Ω	%E20(14)
R63(1)	CCL3	D7	68Ω	%E20(15)
R51(1)	CCL3	B4	68Ω	%E25(2)
R149(1)	CCL4	B2	68Ω	%E27(14)
R156(1)	CCL2	C2	68Ω	%E28(2)
R210(1)	CCL5	A7	68Ω	%E28(3)
R101(1)	CCL3	D6	68Ω	%E29(14)
R26(1)	CCL3	C6	68Ω	%E29(15)
R46(1)	CCL1	A5	68Ω	%E3(1)
R47(1)	CCL1	A5	68Ω	%E3(15)
R48(1)	CCL1	A5	68Ω	%E3(2)
R59(1)	CCL3	D7	68Ω	%E30(14)
R54(1)	CCL3	C4	68Ω	%E30(2)
R171(1)	CCL5	A6	68Ω	%E33(15)
R66(1)	CCL3	C2	68Ω	%E36(15)
R161(1)	CCL4	B5	68Ω	%E38(15)
R195(1)	CCL6	B4	68Ω	%E39(13)
R110(1)	CCL1	C2	68Ω	%E39(2)
R81(1)	CCL6	B4	68Ω	%E39(4)
R53(1)	CCL4	B7	68Ω	%E42(3)
R164(1)	CCL4	B4	68Ω	%E47(15)
R163(1)	CCL4	A5	68Ω	%E47(2)
R160(1)	CCL4	A5	68Ω	%E49(7)
R184(1)	CCL6	C7	68Ω	%E5(14)
R179(1)	CCL6	C7	68Ω	%E5(15)
R158(1)	CCL1	C3	68Ω	%E50(15)
R75(1)	CCL3	B7	68Ω	%E50(2)
R32(1)	CCL4	C5	68Ω	%E52(2)
R70(1)	CCL3	B7	68Ω	%E56(2)
R218(1)	CCL5	C7	68Ω	%E58(10)
R219(1)	CCL5	C7	68Ω	%E58(13)
R84(1)	CCL2	A5	68Ω	%E58(3)
R85(1)	CCL2	A5	68Ω	%E65(14)
R117(1)	CCL5	B3	68Ω	%E69(15)
R119(1)	CCL5	B3	68Ω	%E69(2)
R135(1)	CCL6	C4	68Ω	%E7(1)

RESISTOR LOC(PIN)	SHOWN ON DRW#	REF	VALUE	TERMINATES SIGNAL
R138(1)	CCL6	C4	68Ω	%E7(14)
R137(1)	CCL6	C4	68Ω	%E7(15)
R136(1)	CCL6	D4	68Ω	%E7(2)
R96(1)	CCL1	A7	68Ω	%E9(14)
R191(1)	CCL1	B3	68Ω	CCL TERM1
R196(1)	CCL1	B3	68Ω	CCL TERM2
R50(1)	CCL1	A4	68Ω	-CCL1 ADR PAR ERR H
R19(1)	CCL1	C7	68Ω	CCL1 ADR PAR ERR EN H
R49(1)	CCL1	C7	68Ω	-CCL1 ADR PAR ERR EN H
R200(1)	CCL1	B7	68Ω	CCL1 ADR PAR ERR IN H
R105(1)	CCL1	B7	68Ω	-CCL1 ADR PAR ERR IN H
R58(1)	CCL1	B2	68Ω	CCL1 CLK A H
R73(1)	CCL1	B2	68Ω	CCL1 CLK B H
R157(1)	CCL1	B2	68Ω	CCL1 CLK C H
R33(1)	CCL1	B2	68Ω	CCL1 CLK D H
R109(1)	CCL1	B2	68Ω	CCL1 CLK E H
R98(1)	CCL1	B2	68Ω	CCL1 CLK F H
R77(1)	CCL1	C2	68Ω	CCL1 DATA EN H
R202(1)	CCL1	C2	68Ω	-CCL1 DATA EN H
R68(1)	CCL1	D7	68Ω	CCL1 ERR REQ H
R21(1)	CCL1	C2	68Ω	CCL1 MB CYC H
R153(1)	CCL1	C2	68Ω	-CCL1 MB CYC H
R5(1)	CCL1	C2	68Ω	-CCL1 MB CYC A H
R56(1)	CCL1	B5	68Ω	CCL1 MB CYC DLY H
R99(1)	CCL1	C4	68Ω	-CCL1 MEM ERR H
R17(1)	CCL1	A7	68Ω	CCL1 MEM ERR CLR H
R1(1)	CCL1	A4	68Ω	-CCL1 MEM PAR ERR H
R20(1)	CCL1	D7	68Ω	CCL1 MEM PAR ERR EN H
R8(1)	CCL1	D7	68Ω	-CCL1 MEM PAR ERR EN H
R199(1)	CCL1	B7	68Ω	CCL1 MEM PAR ERR IN H
R89(1)	CCL1	B7	68Ω	-CCL1 MEM PAR ERR IN H
R145(1)	CCL1	B2	68Ω	CCL1 MR RESET H
R38(1)	CCL1	B2	68Ω	-CCL1 MR RESET H
R6(1)	CCL1	A4	68Ω	-CCL1 NXM ERR H
R15(1)	CCL1	C7	68Ω	CCL1 NXM ERR EN H
R7(1)	CCL1	C7	68Ω	-CCL1 NXM ERR EN H
R114(1)	CCL1	C7	68Ω	CCL1 NXM ERR IN H
R91(1)	CCL1	C7	68Ω	-CCL1 NXM ERR IN H
R2(1)	CCL1	A2	68Ω	CCL1 ST/RES INTR H
R3(1)	CCL1	A2	68Ω	-CCL1 ST/RES INTR H

RESISTOR LOC(PIN)	SHOWN ON DRW#	REF	VALUE	TERMINATES SIGNAL
R28(1)	CCL1	D5	68Ω	-CCL1 T0 H
R11(1)	CCL1	D5	68Ω	CCL1 T0 A H
R34(1)	CCL1	D5	68Ω	-CCL1 T0 A H
R185(1)	CCL1	C5	68Ω	CCL1 T1 H
R203(1)	CCL1	D5	68Ω	-CCL1 T1 H
R111(1)	CCL1	C5	68Ω	-CCL1 T2 H
R29(1)	CCL1	C5	68Ω	-CCL1 T3 H
R39(1)	CCL2	A4	68Ω	-CCL2 AC=1 H
R37(1)	CCL2	A4	68Ω	CCL2 AC=3 OR 4 H
R36(1)	CCL2	B4	68Ω	CCL2 AC=4 H
R122(1)	CCL2	B4	68Ω	CCL2 ACT FLAG REQ H
R79(1)	CCL2	C4	68Ω	-CCL2 ACT FLAG REQ A H
R150(1)	CCL2	C6	68Ω	CCL2 ACT FLAG REQ ENA H
R152(1)	CCL2	C6	68Ω	-CCL2 ACT FLAG REQ ENA H
R13(1)	CCL2	C4	68Ω	-CCL2 CCWF REQ H
R25(1)	CCL2	C4	68Ω	-CCL2 CCWF REQ A H
R151(1)	CCL2	C6	68Ω	CCL2 CCWF REQ ENA H
R78(1)	CCL2	C6	68Ω	-CCL2 CCWF REQ ENA H
R189(1)	CCL2	B2	68Ω	-CCL2 CLR REQ H
R147(1)	CCL2	B6	68Ω	-CCL2 HOLD MEM H
R162(1)	CCL2	B4	68Ω	-CCL2 MEM STORE REQ A H
R144(1)	CCL2	C6	68Ω	-CCL2 MEM STORE REQ ENA H
R76(1)	CCL3	C6	68Ω	CCL3 AF T0 H
R31(1)	CCL3	C6	68Ω	CCL3 AF T1 H
R198(1)	CCL3	C6	68Ω	-CCL3 AF T2 H
R64(1)	CCL3	D6	68Ω	CCL3 CCWF T0 H
R10(1)	CCL3	D6	68Ω	-CCL3 CCWF T0 H
R139(1)	CCL3	D6	68Ω	CCL3 CCWF T1 H
R205(1)	CCL3	D6	68Ω	CCL3 CCWF T2 H
R60(1)	CCL3	D6	68Ω	-CCL3 CCWF T2 H
R74(1)	CCL3	B6	68Ω	CCL3 CHAN REQ EN H
R71(1)	CCL3	B6	68Ω	-CCL3 CHAN REQ EN H
R4(1)	CCL3	A4	68Ω	-CCL3 INIT MB CYC H
R65(1)	CCL3	C2	68Ω	-CCL3 INIT RAM REQ H
R187(1)	CCL3	D6	68Ω	-CCL3 MB CYC T3 H
R52(1)	CCL3	B6	68Ω	-CCL3 MB REQ T0 H
R23(1)	CCL3	B4	68Ω	CCL3 MB REQ T1 H
R61(1)	CCL3	B4	68Ω	-CCL3 MB REQ T1 H
R126(1)	CCL3	B4	68Ω	CCL3 MB REQ T2 H
R206(1)	CCL3	C6	68Ω	CCL3 MB RIP A H

RESISTOR LOC(PIN)	SHOWN ON DRW#	REF	VALUE	TERMINATES SIGNAL
R80(1)	CCL3	C6	68Ω	-CCL3 MB RIP A H
R172(1)	CCL3	D4	68Ω	CCL3 MEM PTR EN H
R55(1)	CCL3	D4	68Ω	-CCL3 MEM PTR EN H
R45(1)	CCL3	D3	68Ω	CCL3 MEM PTR EN A H
R69(1)	CCL3	A7	68Ω	CCL3 ZERO FILL REQ H
R143(1)	CCL4	B4	68Ω	-CCL4 AF WD READY H
R146(1)	CCL4	B1	68Ω	CCL4 MB RIP CLR H
R57(1)	CCL4	C1	68Ω	CCL4 MB RIP IN H
R35(1)	CCL4	C5	68Ω	-CCL4 MB SEL SUB H
R127(1)	CCL4	D3	68Ω	CCL4 REQ CTR 0 H
R125(1)	CCL4	D3	68Ω	CCL4 REQ CTR 1 H
R120(1)	CCL4	D3	68Ω	CCL4 REQ CTR 2 H
R204(1)	CCL4	C1	68Ω	CCL4 REQ CTR=0 H
R30(1)	CCL4	D1	68Ω	-CCL4 REQ CTR=1 H
R22(1)	CCL4	B1	68Ω	CCL4 REVERSE H
R103(1)	CCL4	B1	68Ω	-CCL4 REVERSE H
R142(1)	CCL4	C1	68Ω	CCL4 RIP INH H
R148(1)	CCL4	B7	68Ω	CCL4 STORE CCW H
R67(1)	CCL4	B7	68Ω	-CCL4 STORE CCW H
R154(1)	CCL4	B1	68Ω	-CCL4 WD TAKEN H
R86(1)	CCL5	D4	68Ω	CCL5 ALU CA H
R42(1)	CCL5	D5	68Ω	CCL5 ALU CB H
R121(1)	CCL5	C4	68Ω	CCL5 HI
R44(1)	CCL5	A5	68Ω	CCL5 REG 03 H
R43(1)	CCL5	A5	68Ω	CCL5 REG 04 H
R41(1)	CCL5	A5	68Ω	CCL5 REG 05 H
R123(1)	CCL5	B3	68Ω	CCL5 REG 06 H
R124(1)	CCL5	A3	68Ω	CCL5 REG 07 H
R88(1)	CCL5	A3	68Ω	CCL5 REG 08 H
R87(1)	CCL5	A3	68Ω	CCL5 REG 09 H
R176(1)	CCL5	B1	68Ω	CCL5 REG 10 H
R177(1)	CCL5	A1	68Ω	CCL5 REG 11 H
R178(1)	CCL5	A1	68Ω	CCL5 REG 12 H
R128(1)	CCL5	A1	68Ω	CCL5 REG 13 H
R215(1)	CCL5	B5	68Ω	CCL5 REG HOLD H
R217(1)	CCL5	B3	68Ω	CCL5 WC GE4 H
R170(1)	CCL5	C2	68Ω	CCL5 WC=0 H
R182(1)	CCL6	C2	68Ω	CCL6 CMD STORED H
R180(1)	CCL6	C2	68Ω	-CCL6 CMD STORED H
R134(1)	CCL6	C5	68Ω	CCL6 CMD STORED IN H

NOTE:

1. ALL TERMINATORS HAVE PIN TWO CONNECTED TO -2.0V AND ARE 5% 1/4WATT UNLESS OTHERWISE SPECIFIED
2. ENTRIES ARE SORTED BY SIGNAL NAME
3. % INDICATES OUTPUT OF DIP LOC AND () INDICATES PIN NUMBER

"THIS DRAWING AND SPECIFICATIONS, HEREIN, ARE THE PROPERTY OF DIGITAL EQUIPMENT CORPORATION AND SHALL NOT BE REPRODUCED OR COPIED OR USED IN WHOLE OR IN PART AS THE BASIS FOR THE MANUFACTURE OR SALE OF ITEMS WITHOUT WRITTEN PERMISSION. COPYRIGHT © 1976, DIGITAL EQUIPMENT CORPORATION"

REVISIONS		
CHK	CHANGE NO.	REV

digital

DRN. G Smith DATE 25-OCT-76 ENG. M. Shaw DATE 11/12/76
CHK. DATE BOARD LOCATION:
SHEET 1 OF 2
585361.DRW[4,175] 25-OCT-76 17:23 NEXT HIGHER ASSEMBLY:
FIRST USED ON OPTION/MODEL: KL10 B-DD-M8536-0

TITLE: CHANNEL CONTROL LOGIC TERMINATORS

SIZE	CODE	NUMBER	REV.
D	CS	M8536-0-RES	C

288

1 MR

RESISTOR LOC(PIN)	SHOWN ON DRW#	REF	VALUE	TERMINATES SIGNAL
R101(1)	CCL6	C2	68Ω	CCL6 CMD TOGGLED H
R106(1)	CCL6	C2	68Ω	-CCL6 CMD TOGGLED H
R129(1)	CCL6	B6	68Ω	CCL6 CMD TOGGLED IN H
R16(1)	CCL6	B3	68Ω	-CCL6 CSH CHAN CYC H
R141(1)	CCL6	C3	68Ω	-CCL6 LAST XFER ERR H
R130(1)	CCL6	D6	68Ω	-CCL6 LAST XFER ERR IN H
R197(1)	CCL6	D3	68Ω	-CCL6 WC=0 STORED H
R193(1)	CCL2	C7	68Ω	CCW ACT FLAG REQ ENA H
R24(1)	CCL2	C7	68Ω	CCW CCWF REQ ENA H
R27(1)	CCL3	A7	68Ω	-CCW MEM ADR=0 H
R192(1)	CCL2	C7	68Ω	CCW MEM STORE ENA H
R107(1)	CCL5	B7	68Ω	CCW MIX 00 H
R106(1)	CCL5	A7	68Ω	CCW MIX 01 H
R104(1)	CCL5	A7	68Ω	CCW MIX 02 H
R116(1)	CCL5	A5	68Ω	CCW MIX 03 H
R112(1)	CCL5	A5	68Ω	CCW MIX 04 H
R113(1)	CCL5	A5	68Ω	CCW MIX 05 H
R175(1)	CCL5	B3	68Ω	CCW MIX 06 H
R174(1)	CCL5	A3	68Ω	CCW MIX 07 H
R169(1)	CCL5	A3	68Ω	CCW MIX 08 H
R173(1)	CCL5	A3	68Ω	CCW MIX 09 H
R214(1)	CCL5	B2	68Ω	CCW MIX 10 H
R212(1)	CCL5	A2	68Ω	CCW MIX 11 H
R207(1)	CCL5	A2	68Ω	CCW MIX 12 H
R211(1)	CCL5	A2	68Ω	CCW MIX 13 H
R14(1)	CCL3	D7	68Ω	-CCW WD READY H
R72(1)	CCL4	B7	68Ω	-CH CTOM H
R165(1)	CCL1	D1	68Ω	-CH DIAG 04 H
R166(1)	CCL1	D1	68Ω	-CH DIAG 05 H
R168(1)	CCL1	D1	68Ω	-CH DIAG 06 H
R167(1)	CCL1	D1	68Ω	-CH DIAG READ A H
R183(1)	CCL6	B7	68Ω	CH DONE INTR H
R155(1)	CCL6	B4	68Ω	CH REVERSE H
R94(1)	CCL1	D6	68Ω	-CH T0 H
R95(1)	CCL1	C6	68Ω	-CH T1 H
R100(1)	CCL1	C6	68Ω	-CH T2 H
R97(1)	CCL1	D6	68Ω	-CH T3 H
R12(1)	CCL1	C8	68Ω	-CHAN ADR PAR ERR H
R9(1)	CCL1	C8	68Ω	-CHAN NXM ERR H
R10(1)	CCL1	D8	68Ω	-CHAN PAR ERR H

RESISTOR LOC(PIN)	SHOWN ON DRW#	REF	VALUE	TERMINATES SIGNAL
R100(1)	CCL1	B2	68Ω	CLK CCL H
R115(1)	CCL4	D3	68Ω	CRC ACT CTR 0 H
R82(1)	CCL2	A5	68Ω	CRC ACT CTR 1 H
R83(1)	CCL2	A5	68Ω	CRC ACT CTR 2 H
R110(1)	CCL2	A5	68Ω	-CRC ACT CTR 2R H
R213(1)	CCL5	A2	68Ω	CRC LONG WC ERR H
R131(1)	CCL1	C3	68Ω	CRC MB CYC H
R102(1)	CCL3	D5	68Ω	-CRC MB CYC H
R200(1)	CCL5	A2	68Ω	CRC OVN ERR IN H
R90(1)	CCL1	A5	68Ω	CRC RAM ADR 1R H
R93(1)	CCL1	A5	68Ω	CRC RAM ADR 2R H
R92(1)	CCL1	A5	68Ω	CRC RAM ADR 4R H
R190(1)	CCL2	C2	68Ω	-CRC RAM CYC H
R201(1)	CCL4	B5	68Ω	CRC REQ D H
R194(1)	CCL3	C2	68Ω	-CRC REQ E H
R188(1)	CCL3	D2	68Ω	-CRC RESET H
R216(1)	CCL5	B2	68Ω	CRC RH20 ERR IN H
R209(1)	CCL5	A2	68Ω	CRC SHORT WC ERR H
R159(1)	CCL6	B4	68Ω	CSH CHAN CYC A H

NOTE:

1. ALL TERMINATORS HAVE PIN TWO CONNECTED TO -2.0V AND ARE 5% 1/4WATT UNLESS OTHERWISE SPECIFIED
2. ENTRIES ARE SORTED BY SIGNAL NAME
3. % INDICATES OUTPUT OF DIP LOC AND
   () INDICATES PIN NUMBER

"THIS DRAWING AND SPECIFICATIONS, HEREIN, ARE THE PROPERTY OF DIGITAL EQUIPMENT CORPORATION AND SHALL NOT BE REPRODUCED OR COPIED OR USED IN WHOLE OR IN PART AS THE BASIS FOR THE MANUFACTURE OR SALE OF ITEMS WITHOUT WRITTEN PERMISSION.
COPYRIGHT © 1976, DIGITAL EQUIPMENT CORPORATION"

REVISIONS		
CHK	CHANGE NO.	REV

digital

DRN. G Smith DATE 25-OCT-76
CHK. DATE 10/27/76
585362.DRW[4,175] 25-OCT-76 17:23
FIRST USED ON OPTION/MODEL: KL10

ENG. M. Schwartz DATE 11/12/76
BOARD LOCATION:
SHEET 2 OF 2
NEXT HIGHER ASSEMBLY: B-DD-M8536-0

TITLE: CHANNEL CONTROL LOGIC TERMINATORS

SIZE	CODE	NUMBER	REV.
D	CS	M8536-0-RES	C

DRAWING NUMBER	PAGE	PART NO.	DESCRIPTION				REVISIONS
			FILE: ORIGINAL LAYOUT				
			ECO NUMBER		1	2	
			MODULE REVISION	A	B	B	
D-UA-M8549-YD-0	5		CHANNEL CONTROL LOGIC	-	A	B	
K-PL-M8549-YD-DBP	1		PARTS LIST	-	A	B	
D-CS-M8549-YD-CCLS	1		CHANNEL CONTROL LOGIC	-	-	-	
D-MD-5011495-0-0	5		DRILL & ETCH DRAWING	-	-	A	
		5011495	ETCH CIRCUIT BOARD	A	A	A	
K-PC-M8549-YD-DBC	-		P.C. DESIGN DATA BASE	-	A	B	
P00-M8549-YD	-		PROCESS SHEET (REFERENCE ONLY)				

NOTES:ECO 2 DOCUMENTATION CHANGE ONLY

"THIS DRAWING AND SPECIFICATIONS, HEREIN, ARE THE PROPERTY OF DIGITAL EQUIPMENT CORPORATION AND SHALL NOT BE REPRODUCED OR COPIED OR USED IN WHOLE OR IN PART AS THE BASIS FOR THE MANUFACTURE OR SALE OF ITEMS WITHOUT WRITTEN PERMISSION. COPYRIGHT © 1978, DIGITAL EQUIPMENT CORPORATION"

REVISIONS		
CHK	CHANGE NO.	REV
	M8549-YD-2	B
T. BOWEN		

digital

DRW. T. Toomey DATE 21-NOV-78 ENG. E. Cahe DATE 11/22/78
CHK'D M. Normand DATE 11/22/78 BOARD LOCATION:
DSK:8549DD.T2P[4,550] 21-NOV-78 08:39 SHEET 1 OF 1
FIRST USED ON OPTION/MODEL: KL10/20 NEXT HIGHER ASSEMBLY: NONE

TITLE: CHANNEL CTL LOGIC SUBSTITUTE BOARD

SIZE	CODE	NUMBER	REV.
D	DD	M8549-YD	B

ME

290

"THIS DRAWING AND SPECIFICATIONS, HEREIN, ARE THE PROPERTY OF DIGITAL EQUIPMENT CORPORATION AND SHALL NOT BE REPRODUCED OR COPIED OR USED IN WHOLE OR IN PART AS THE BASIS FOR THE MANUFACTURE OR SALE OF ITEMS WITHOUT WRITTEN PERMISSION.
COPYRIGHT © 1975, DIGITAL EQUIPMENT CORPORATION"

LAYER 1

MS30061 M8549 501. +95A

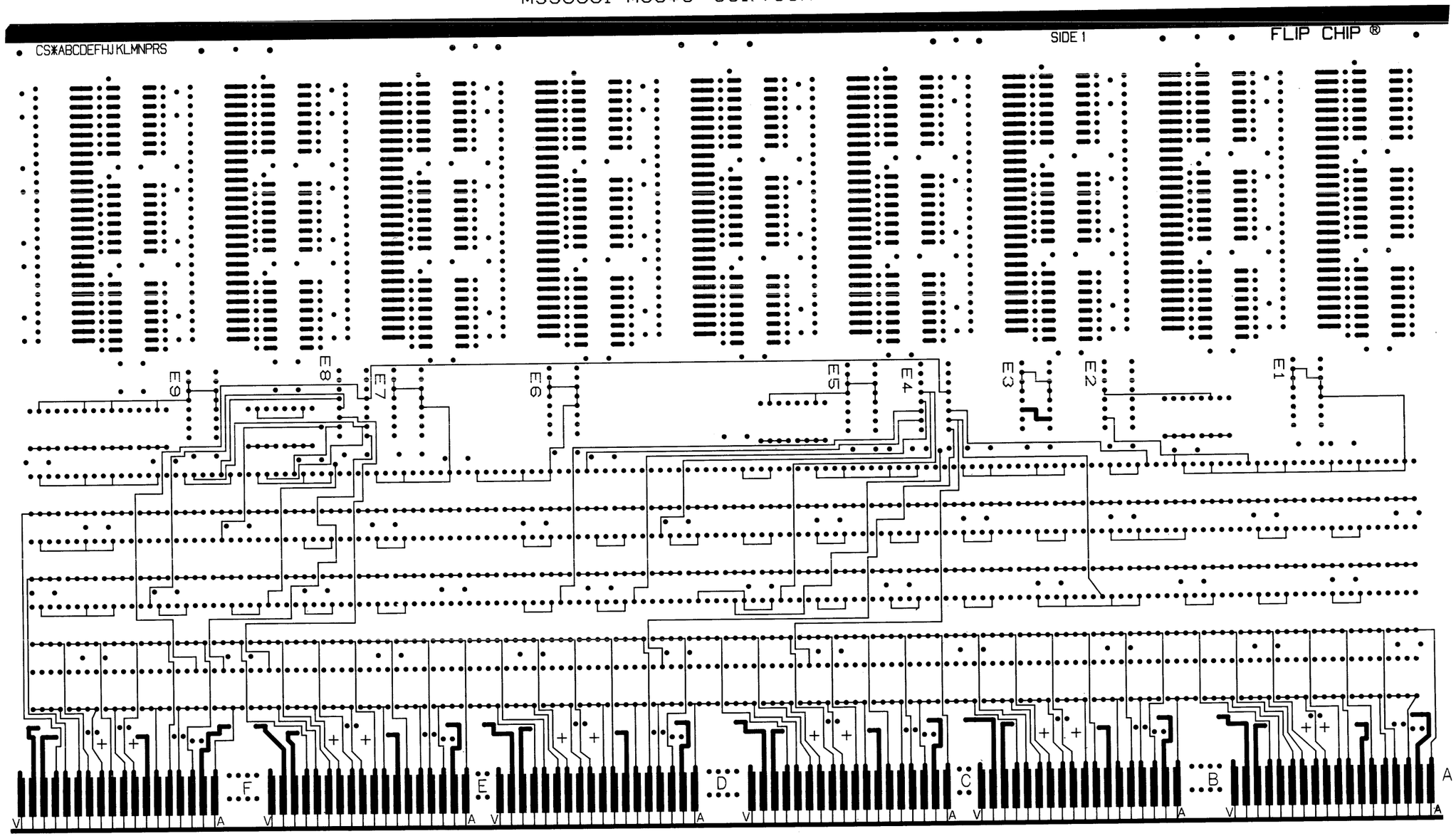

REVISIONS		
CHK	CHANGE NO.	REV.

TITLE	SIZE	CODE	NUMBER	REV.
CHANNEL CONTROL LOGIC SUBSTITUTE BD	D	UA	M8549-YD-Ø	B
SCALE 2/1	SHEET 2 OF 5	DIST.		

291

DEC FORM NO
MRD 1.27

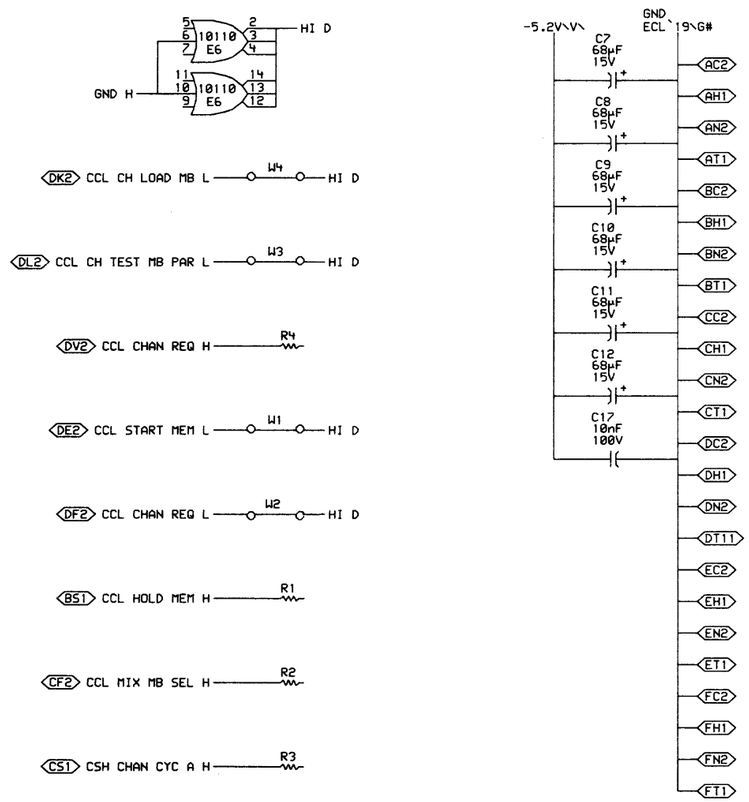

NOTE:

1. THE FOLLOWING PIN NUMBERS APPLY TO ECL DIP PACKAGES

GND	-5.2	MANUFACTURES' PART NUMBER
1 16	8	ALL 10,000 SERIES UNLESS OTHERWISE SPECIFIED
1 15 16	8	10110 & 10210
16	8	10158 & 10173

1 OF 1

"THIS DRAWING AND SPECIFICATIONS, HEREIN, ARE THE PROPERTY OF DIGITAL EQUIPMENT CORPORATION AND SHALL NOT BE REPRODUCED OR COPIED OR USED IN WHOLE OR IN PART AS THE BASIS FOR THE MANUFACTURE OR SALE OF ITEMS WITHOUT WRITTEN PERMISSION.
COPYRIGHT © 1975, DIGITAL EQUIPMENT CORPORATION"

REVISIONS		
CHK	CHANGE NO.	REV

digital

DRN: DATE 2-4-75 | ENG. DATE 2-4-75 | TITLE: CHANNEL CONTROL LOGIC SUBSTITUTE

CHK: DATE 2-14-75 | BOARD LOCATION: | SHEET 1 OF 1

CCLS1[4,121] 19-FEB-75 08:59 | NEXT HIGHER ASSEMBLY: B-DD-M8549-YD

FIRST USED ON OPTION/MODEL: KL10

SIZE	CODE	NUMBER	REV.
D	CS	M8549-YD-CCLS	

292

REVISION CONTROL SHEET

CUSTOMER PRINT SET	MFG SET	DRAWING NO	NO OF SHT	DESCRIPTION	OPTION NO/FILE DATE	REVISIONS (REWORK VERSION)					
			-	MODULE REVISION		A	A	B	C	C	C
		D-UA-M8537-Ø-Ø	8	MBOX CONTROL 4		-	A	B	C	C	C1
		D-CS-M8537-Ø-MBZ1	1	CORE BUSY, MB IN SEL N, CHAN CTL		-	-	A	B	B	B1
		D-CS-M8537-Ø-MBZ2	1	EBUS REG, MBZ DIAG MIX		-	-	A	A	A	A1
		D-CS-M8537-Ø-MBZ3	1	NXM CONTROL & TIMEOUT, HOLD ERA		-	-	A	B	B	B1
		D-CS-M8537-Ø-MBZ4	1	NXM T(N), MBOX ERR FLAGS		-	-	A	B	B	B1
		D-CS-M8537-Ø-MBZ5	1	MBOX & CHAN PAR BIT DATA PATHS		-	-	A	A	A	A1
		D-CS-M8537-Ø-MBZ6	1	EBUS REG IN MIX, CSH PAR BIT		-	-	A	B	B	B1
		D-CS-M8537-Ø-MBZ7	1	MBOX CONTROL #4 POWER, GND, CAP		-	-	A	A	A	A1
		D-CS-M8537-Ø-RES	2	MBOX CONTROL #4 TERMINATORS		-	-	A	B	B	B1
		K-CO-M8537-Ø-4	1	MBOX CONTROL 4 (CALDEC DATA BASE)		B	B	B	B	B	B
		D-AH-M8537-Ø-5	4	MBOX CONTROL 4		A	A	A	A	A	A
		B-MH-M8537-Ø-6	1	MODULE ECO HISTORY		-	REF				
		5010927	-	ETCH CIRCUIT BOARD		B	B	B	B	B	
		POO-M8537-ØØ		PROCESS SHEET (REF ONLY)		-	-	-	-	-	
					ECO NO	ORIG	00001	00002	00003	00003A	00004

CUSTOMER PRINT SET CODES
X = PRINT OF DOCUMENT INCLUDED IN PRINT SET
C = INCLUDES ALL PRINTS INDICATED ON DOCUMENT
S = CONFIDENTIAL AUTHORIZED SIGNATURE REQUIRED

TITLE	SHEET	SIZE	CODE	NUMBER	REV
MBOX CONTROL 4	SHEET 2 OF 3	B	DD	M8537-Ø	D

MR

"THIS DRAWING AND SPECIFICATIONS, HEREIN, ARE THE PROPERTY OF DIGITAL EQUIPMENT CORPORATION AND SHALL NOT BE REPRODUCED OR COPIED OR USED IN WHOLE OR IN PART AS THE BASIS FOR THE MANUFACTURE OR SALE OF ITEMS WITHOUT WRITTEN PERMISSION. COPYRIGHT © 1974 DIGITAL EQUIPMENT CORPORATION"

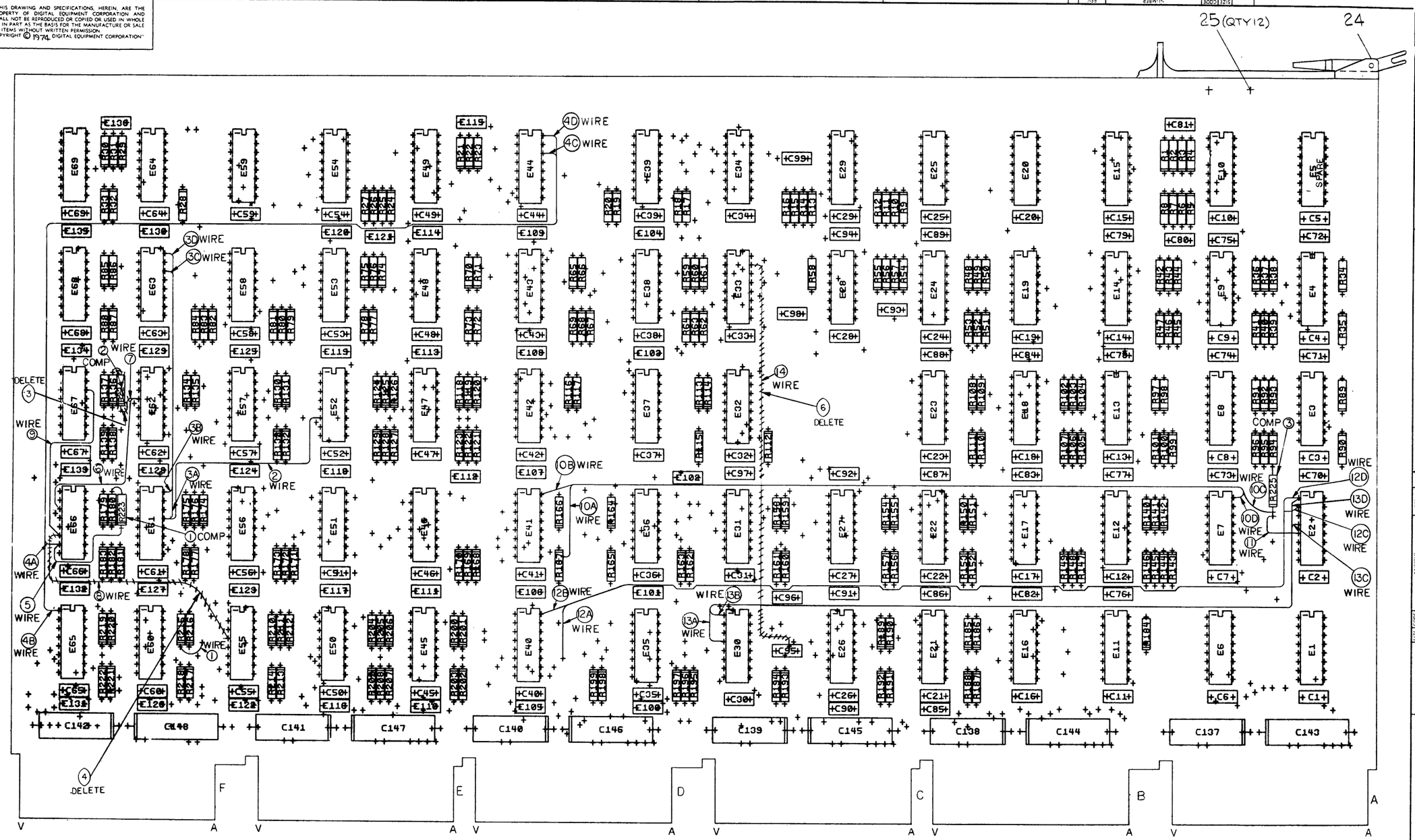

REVISIONS		
CHK	CHANGE NO	REV

TITLE	SIZE	CODE	NUMBER	REV.
MBOX CONTROL 4	D	UA	M8537-0-0	C1
SCALE —	SHEET 3 OF 8		DIST.	

294

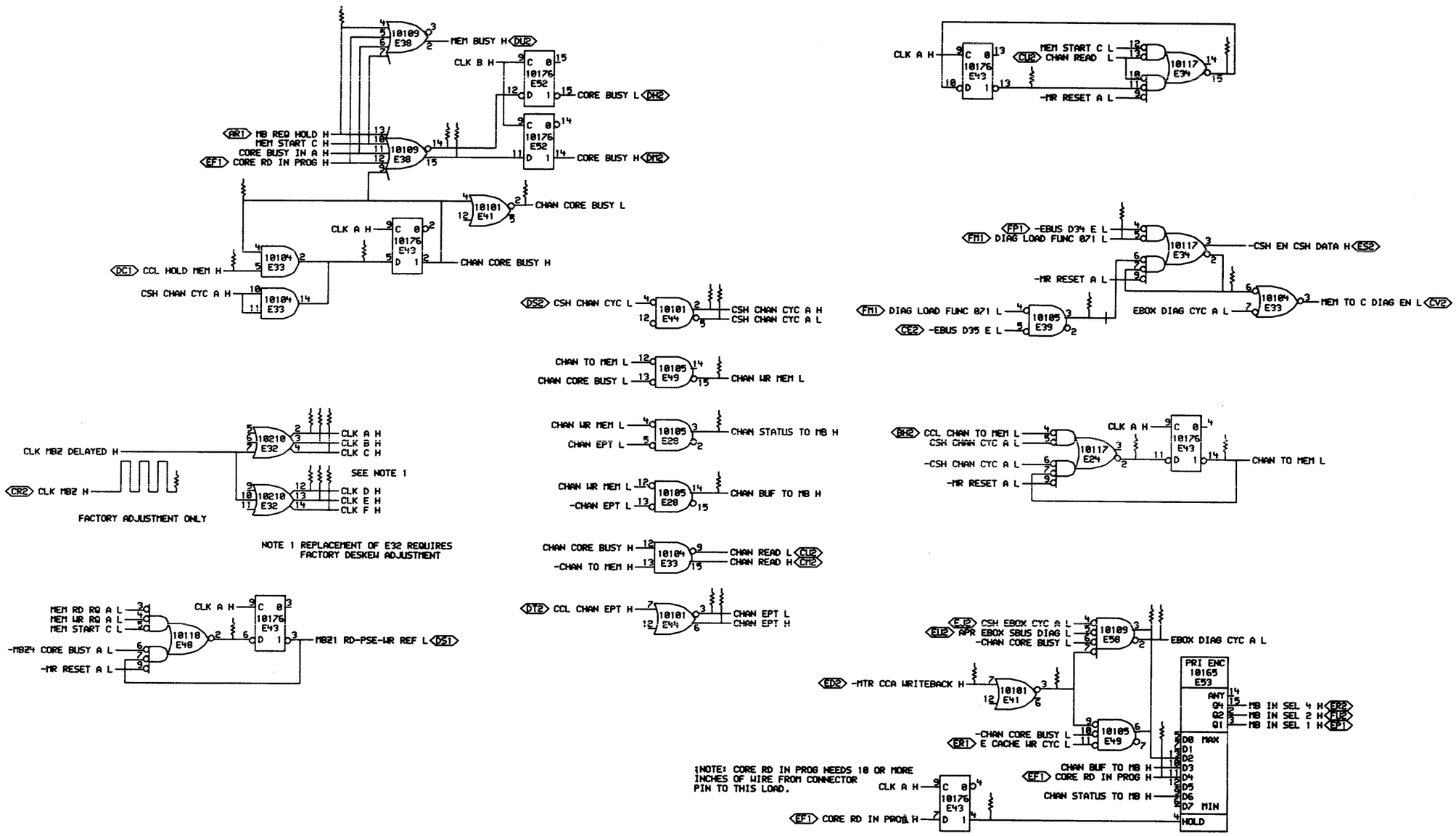

1 OF 7

"THIS DRAWING AND SPECIFICATIONS, HEREIN, ARE THE PROPERTY OF DIGITAL EQUIPMENT CORPORATION AND SHALL NOT BE REPRODUCED OR COPIED OR USED IN WHOLE OR IN PART AS THE BASIS FOR THE MANUFACTURE OR SALE OF ITEMS WITHOUT WRITTEN PERMISSION.
COPYRIGHT © 1975, DIGITAL EQUIPMENT CORPORATION"

REVISIONS			REVISIONS		
CHK	CHANGE NO.	REV	CHK	CHANGE NO.	REV
	M8537-00003	B		M8537-00004	B1
	P. GUGLIELMI			P. GUGLIELMI	

digital

DRN. DATE 04-DEC-75 ENG. DATE 5 Dec 75
CHK'D. DATE
BOARD LOCATION: 4AF20
SHEET 1 OF 1
M821EX.DRUC4.121 27-OCT-75 16:53
NEXT HIGHER ASSEMBLY: B-DD-M8537-0
FIRST USED ON OPTION/MODEL: KL10

TITLE: CORE BUSY, MB IN SEL N, CHAN CTL

SIZE	CODE	NUMBER	REV.
D	CS	M8537-0-MB21	B1

295

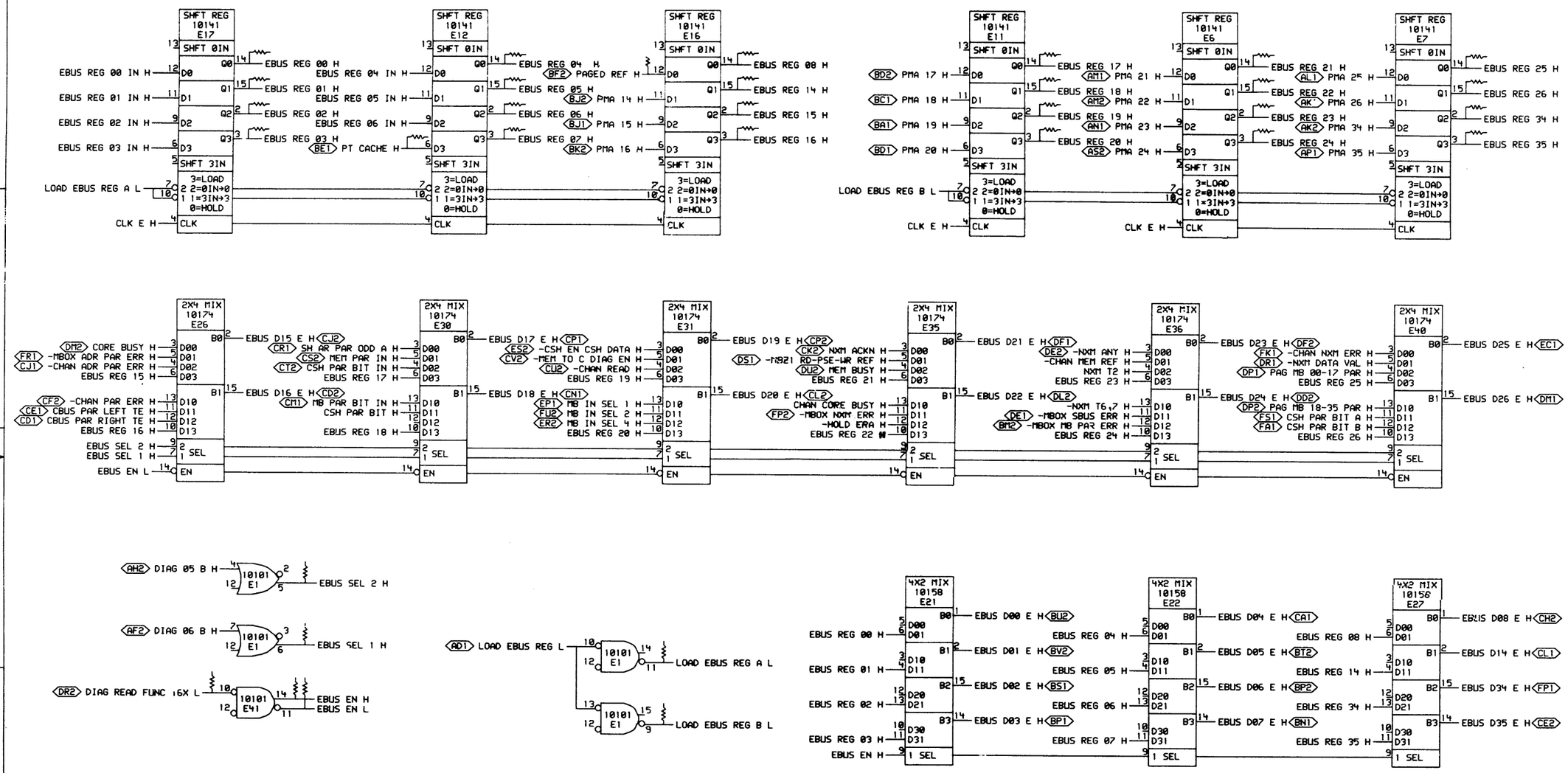

"THIS DRAWING AND SPECIFICATIONS, HEREIN, ARE THE PROPERTY OF DIGITAL EQUIPMENT CORPORATION AND SHALL NOT BE REPRODUCED OR COPIED OR USED IN WHOLE OR IN PART AS THE BASIS FOR THE MANUFACTURE OR SALE OF ITEMS WITHOUT WRITTEN PERMISSION.
COPYRIGHT © 1975, DIGITAL EQUIPMENT CORPORATION"

REVISIONS			REVISIONS		
CHK	CHANGE NO.	REV	CHK	CHANGE NO.	REV
	M8537-00002	A		M8537-00004	A1
	P.GUGLIELMI			P.GUGLIELMI	

digital

DRN: DATE 7/11/75 | ENG. DATE 11 Apr 75 | CHK: DATE 7/11/75 | BOARD LOCATION: 4AF20 | SHEET 1 OF 1

M822EX(4,12)3 05-APR-75 18:19

FIRST USED ON OPTION/MODEL: KL10 | NEXT HIGHER ASSEMBLY: B-DD-M8537-0

TITLE: EBUS REG, MBZ DIAG MIX

SIZE	CODE	NUMBER	REV.
D	CS	M8537-0-MBZ2	A1

296

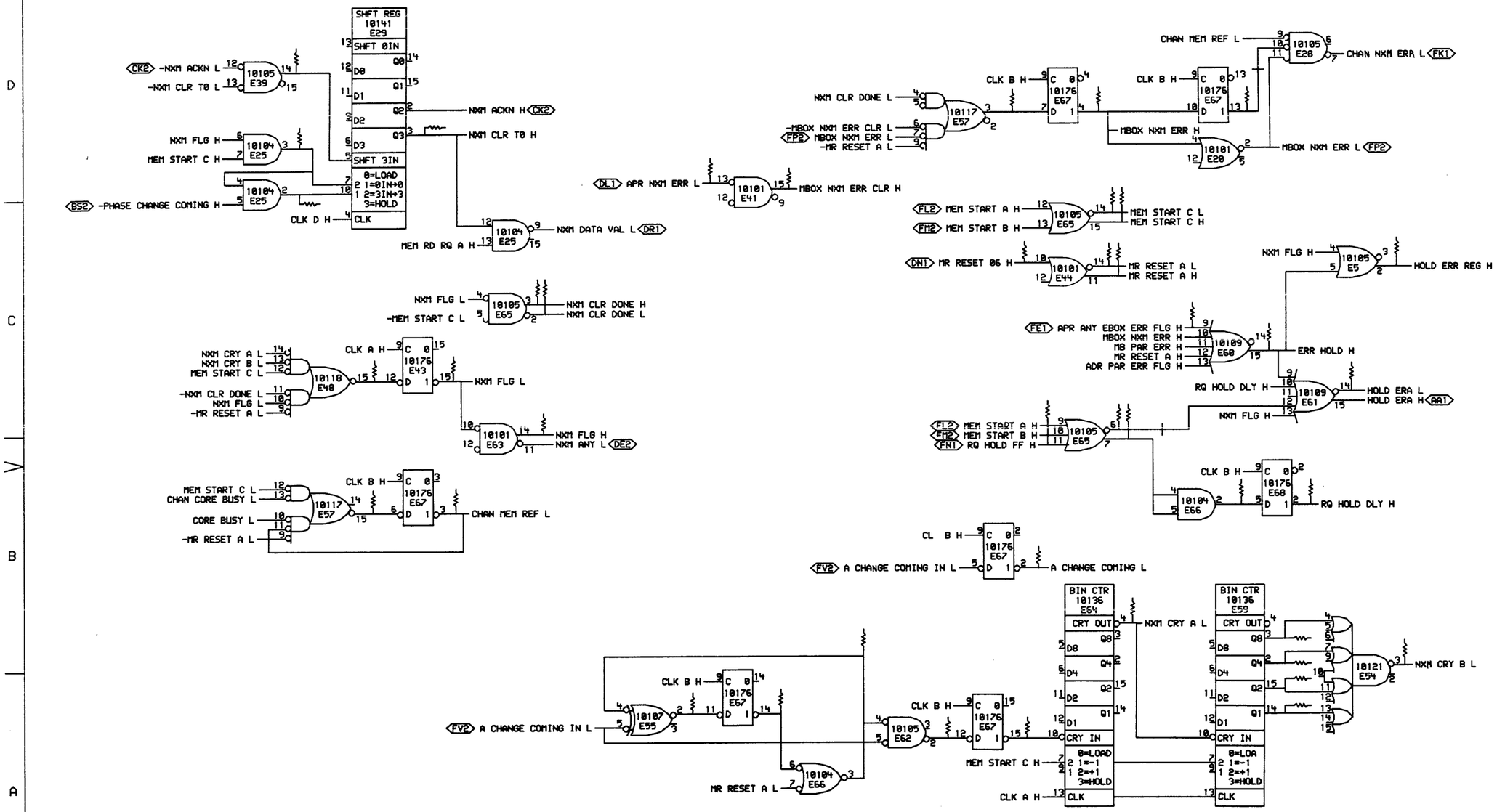

3 OF 7

"THIS DRAWING AND SPECIFICATIONS, HEREIN, ARE THE PROPERTY OF DIGITAL EQUIPMENT CORPORATION AND SHALL NOT BE REPRODUCED OR COPIED OR USED IN WHOLE OR IN PART AS THE BASIS FOR THE MANUFACTURE OR SALE OF ITEMS WITHOUT WRITTEN PERMISSION. COPYRIGHT © 1976, DIGITAL EQUIPMENT CORPORATION"

REVISIONS			REVISIONS		
CHK	CHANGE NO.	REV	CHK	CHANGE NO.	REV
	M8537-00003	B		M8537-00004	B1
	B. GUGLIELMI			B. GUGLIELMI	

digital

DRN. J. Zaraby DATE 05-FEB-76
CHK'D. DATE
ENG. DATE 12-FEB-76
BOARD LOCATION: 48E20
SHEET 1 OF 1
M8537X.DRW[4,121] 28-JAN-76 09:53
NEXT HIGHER ASSEMBLY: B-DD-M8537-0
FIRST USED ON OPTION/MODEL: KL10

TITLE: NXM CONTROL & TIMEOUT, HOLD ERA

SIZE	CODE	NUMBER	REV.
D	CS	M8537-0-MBZ3	B1

297

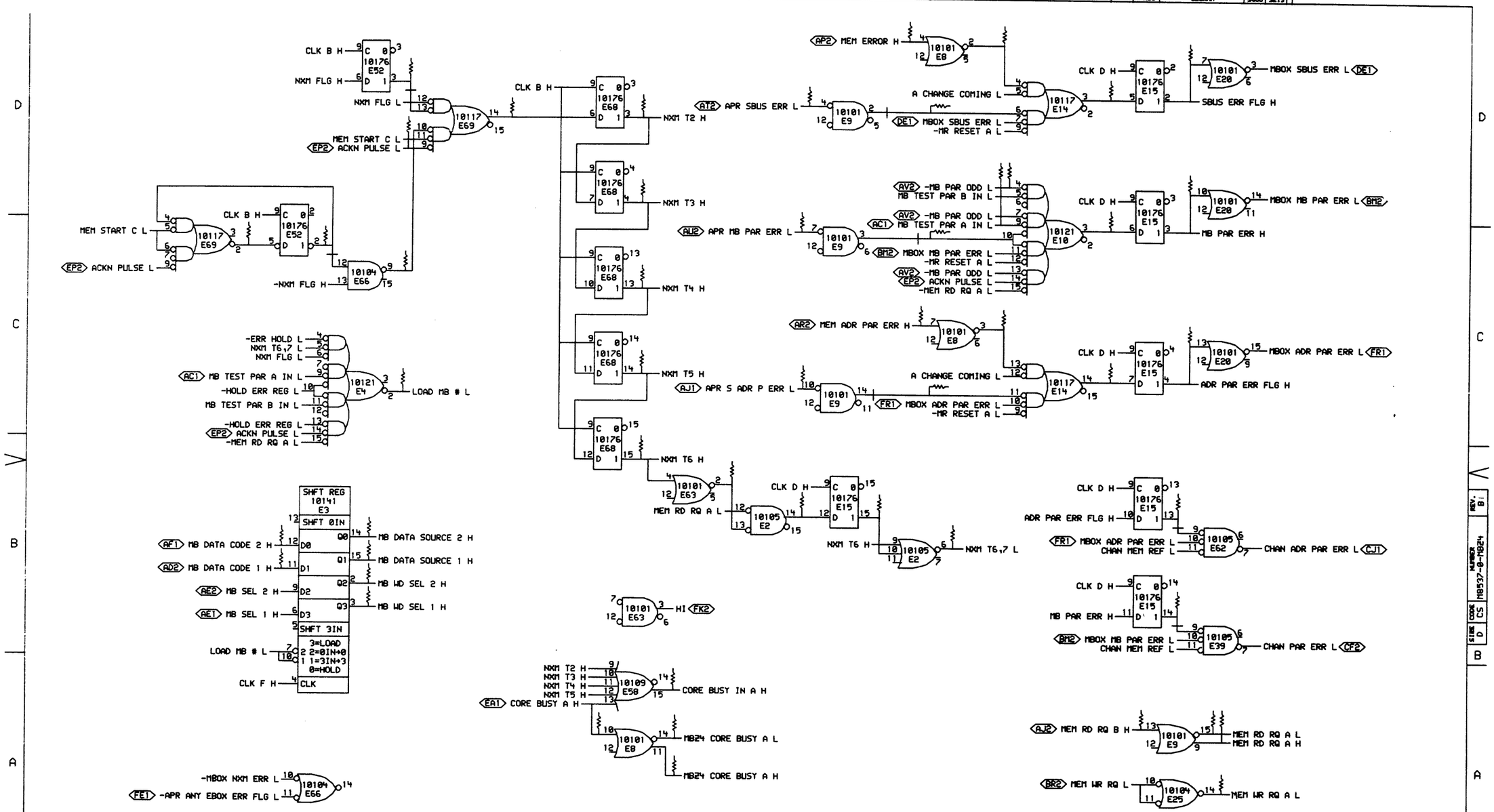

"THIS DRAWING AND SPECIFICATIONS, HEREIN, ARE THE PROPERTY OF DIGITAL EQUIPMENT CORPORATION AND SHALL NOT BE REPRODUCED OR COPIED OR USED IN WHOLE OR IN PART AS THE BASIS FOR THE MANUFACTURE OR SALE OF ITEMS WITHOUT WRITTEN PERMISSION. COPYRIGHT © 1975, DIGITAL EQUIPMENT CORPORATION"

REVISIONS		
CHK	CHANGE NO.	REV
	M8537-00003	B

REVISIONS		
CHK	CHANGE NO.	REV
	M8537-0000-4	B1

digital

DRN. DATE 04-DEC-75 ENG. DATE 5 DEC 75
CHK'D DATE 12/5/75 BOARD LOCATION: 4AF20
SHEET 1 OF 1
M824EX.DRW[4,121] 27-OCT-75 16:58
FIRST USED ON OPTION/MODEL: KL10
NEXT HIGHER ASSEMBLY: B-DD-M8537-0

TITLE: NXM T(N), MBOX ERR FLAGS

SIZE	CODE	NUMBER	REV.
D	CS	M8537-0-MB24	B1

298

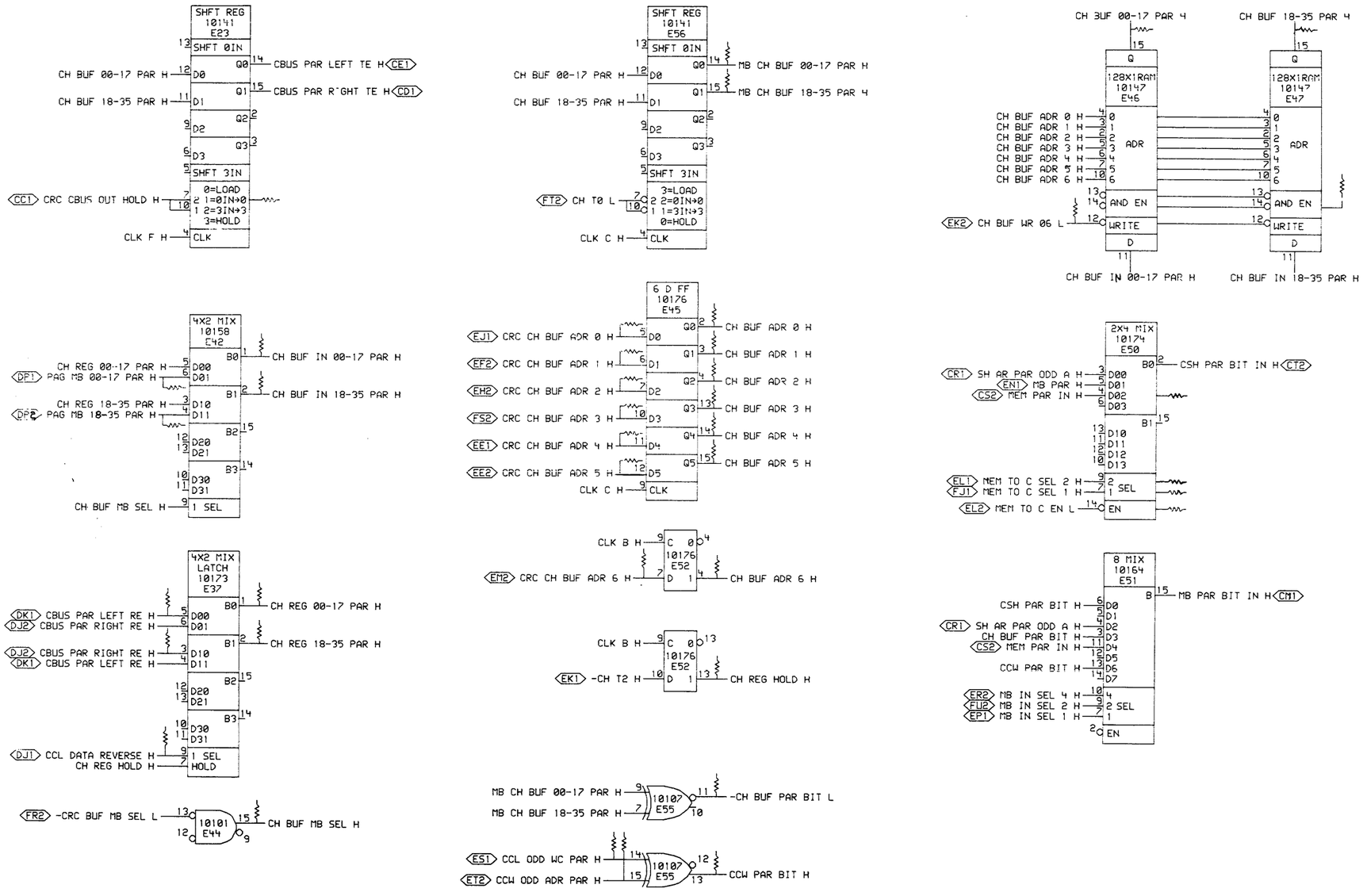

5 OF 7

"THIS DRAWING AND SPECIFICATIONS, HEREIN, ARE THE PROPERTY OF DIGITAL EQUIPMENT CORPORATION AND SHALL NOT BE REPRODUCED OR COPIED OR USED IN WHOLE OR IN PART AS THE BASIS FOR THE MANUFACTURE OR SALE OF ITEMS WITHOUT WRITTEN PERMISSION. COPYRIGHT © 1975, DIGITAL EQUIPMENT CORPORATION"

REVISIONS			REVISIONS		
CHK	CHANGE NO.	REV	CHK	CHANGE NO.	REV
	M8537-00002	A		M8537-00003	A1
	P. GUGLIELMI			P. GUGLIELMI	

digital

DRN	DATE 4/11/75	ENG	DATE 11 APR 75	TITLE: MBOX & CHAN PAR BIT DATA PATHS
CHK	DATE 4/11/75	BOARD LOCATION: 4AF20		
MB25EX[4,121]	05-APR-75 18:25	SHEET 1 OF 1		
FIRST USED ON OPTION/MODEL: KL10		NEXT HIGHER ASSEMBLY: B-DD-M8537-0		

SIZE	CODE	NUMBER	REV.
D	CS	M8537-0-MB25	A1

299

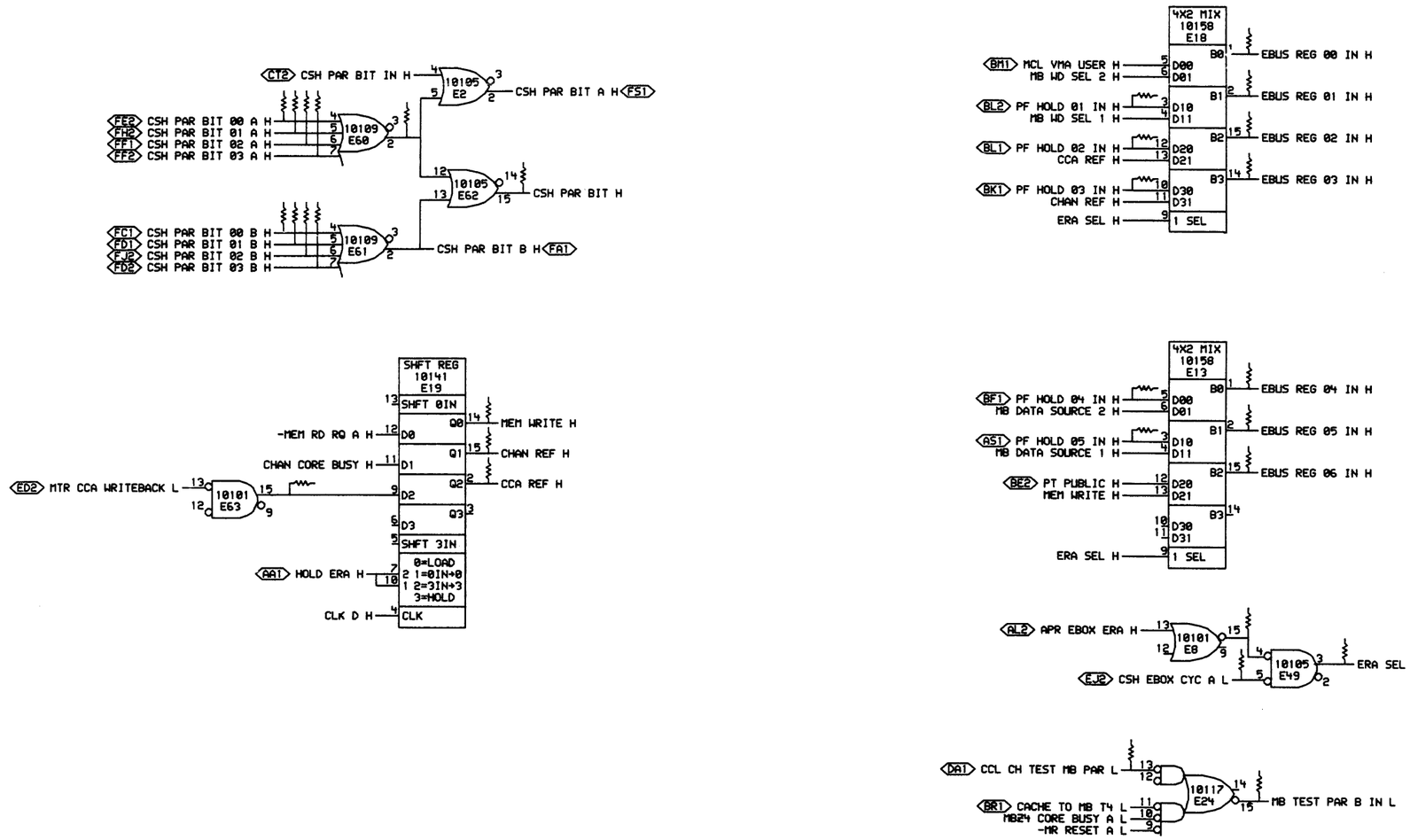

6 OF 7

"THIS DRAWING AND SPECIFICATIONS, HEREIN, ARE THE PROPERTY OF DIGITAL EQUIPMENT CORPORATION AND SHALL NOT BE REPRODUCED OR COPIED OR USED IN WHOLE OR IN PART AS THE BASIS FOR THE MANUFACTURE OR SALE OF ITEMS WITHOUT WRITTEN PERMISSION. COPYRIGHT © 1975, DIGITAL EQUIPMENT CORPORATION"

REVISIONS		
CHK	CHANGE NO.	REV
	M8537-00003	B
	P.GUGLIELMI	

REVISIONS		
CHK	CHANGE NO.	REV
	M8537-00004	B1
	P.GUGLIELMI	

digital

DRN. J. Toomey 04-DEC-75
CHK'D. 12/5/75
M826EX.DRW[4,121] 27-OCT-75 16:58
ENG. J. Allen 5 Dec 75
BOARD LOCATION: 4BF20
SHEET 1 OF 1
NEXT HIGHER ASSEMBLY: B-DD-M8537-0
FIRST USED ON OPTION/MODEL: KL10

TITLE: EBUS REG IN MIX CSH PAR BIT

SIZE	CODE	NUMBER	REV.
D	CS	M8537-0-M826	B1

300

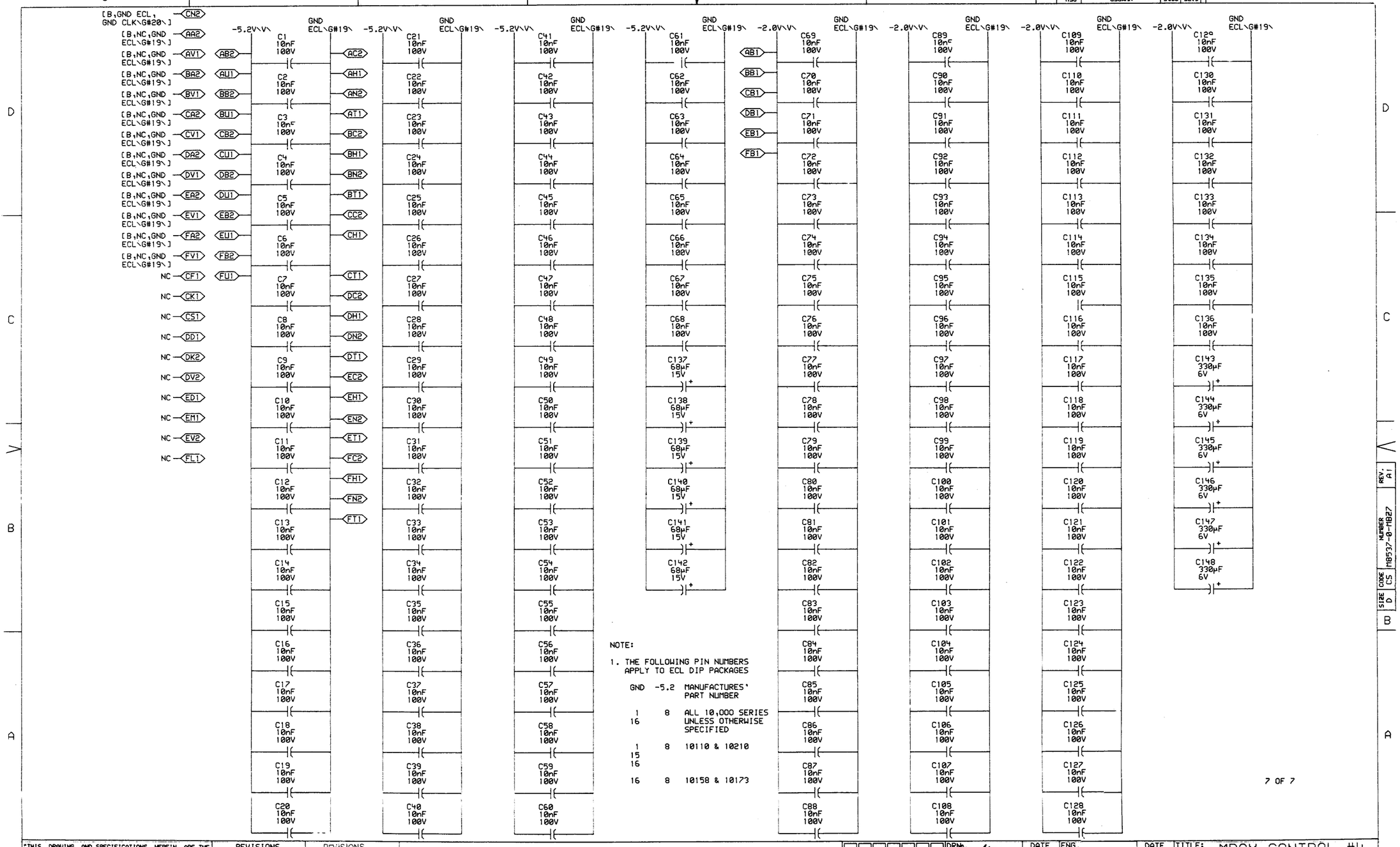

"THIS DRAWING AND SPECIFICATIONS, HEREIN, ARE THE PROPERTY OF DIGITAL EQUIPMENT CORPORATION AND SHALL NOT BE REPRODUCED OR COPIED OR USED IN WHOLE OR IN PART AS THE BASIS FOR THE MANUFACTURE OR SALE OF ITEMS WITHOUT WRITTEN PERMISSION.
COPYRIGHT © 1975, DIGITAL EQUIPMENT CORPORATION"

REVISIONS			REVISIONS		
CHK	CHANGE NO.	REV	CHK	CHANGE NO.	REV
	M8537-00002	A		M8537-00004	A1
	P.GUGLIELMI			P.GUGLIELMI	

digital

DRWN.	DATE 9/11/75	ENG. P. Guglielmi	DATE 11 APR 75
CHK'D.	DATE 9/11/75	BOARD LOCATION: 4AF20	
		SHEET 1 OF 1	

MB27EXE[4,121] 05-APR-75 18:26
FIRST USED ON OPTION/MODEL: KL10
NEXT HIGHER ASSEMBLY: B-DD-M8537-0

TITLE: MBOX CONTROL #4 POWER, GND, CAP

SIZE	CODE	NUMBER	REV.
D	CS	M8537-0-MBZ7	A1

301

RESISTOR LOC(PIN)	SHOWN ON DRW#	REF	VALUE	TERMINATES SIGNAL
R2(1)	MB24EX	C2	68Ω	%E10(3)
R0(1)	MB24EX	C2	68Ω	%E14(14)
R1(1)	MB24EX	D2	68Ω	%E14(3)
R134(1)	MB24EX	B2	68Ω	%E15(13)
R17(1)	MB24EX	B2	68Ω	%E15(14)
R230(1)	MB24EX	B4	68Ω	%E15(15)
R226(1)	MB24EX	B4	68Ω	%E2(14)
R60(1)	MB21EX	B2	68Ω	%E24(2)
R12(1)	MB23EX	C7	68Ω	%E25(2)
R13(1)	MB23EX	D7	68Ω	%E25(3)
R67(1)	MB21EX	C6	68Ω	%E33(2)
R69(1)	MB21EX	D2	68Ω	%E34(15)
R63(1)	MB21EX	C2	68Ω	%E34(2)
R234(1)	MB21EX	D6	68Ω	%E38(14)
R235(1)	MB21EX	D6	68Ω	%E38(15)
R14(1)	MB23EX	D7	68Ω	%E39(14)
R15(1)	MB21EX	C3	68Ω	%E39(3)
R82(1)	MB21EX	A3	68Ω	%E41(3)
R16(1)	MB21EX	D3	68Ω	%E43(13)
R75(1)	MB21EX	A3	68Ω	%E43(4)
R168(1)	MB25EX	D2	68Ω	%E47(14)
R65(1)	MB23EX	C7	68Ω	%E48(15)
R66(1)	MB21EX	B7	68Ω	%E48(2)
R76(1)	MB21EX	B2	68Ω	%E49(6)
R31(1)	MB24EX	C7	68Ω	%E52(2)
R30(1)	MB24EX	D6	68Ω	%E52(3)
R139(1)	MB23EX	A5	68Ω	%E55(2)
R137(1)	MB23EX	B7	68Ω	%E57(15)
R136(1)	MB23EX	D3	68Ω	%E57(3)
R26(1)	MB23EX	A2	68Ω	%E59(14)
R27(1)	MB23EX	A2	68Ω	%E59(15)
R25(1)	MB23EX	B2	68Ω	%E59(2)
R24(1)	MB23EX	B2	68Ω	%E59(3)
R225(1)	MB26EX	D6	68Ω	%E60(2)
R138(1)	MB23EX	A4	68Ω	%E62(2)
R51(1)	MB26EX	C7	68Ω	%E63(15)
R229(1)	MB24EX	B5	68Ω	%E63(2)
R177(1)	MB23EX	C3	68Ω	%E65(6)
R180(1)	MB23EX	C3	68Ω	%E65(7)
R85(1)	MB23EX	B2	68Ω	%E66(2)

RESISTOR LOC(PIN)	SHOWN ON DRW#	REF	VALUE	TERMINATES SIGNAL
R210(1)	MB23EX	B4	68	%E66(3)
R33(1)	MB24EX	C6	68Ω	%E66(9)
R49(1)	MB23EX	D2	68Ω	%E67(13)
R232(1)	MB23EX	A5	68Ω	%E67(14)
R20(1)	MB23EX	A3	68Ω	%E67(15)
R86(1)	MB24EX	D6	68Ω	%E69(14)
R131(1)	MB24EX	C7	68	%E69(2)
R22(1)	MB26EX	B3	68Ω	%E8(15)
R47(1)	MB24EX	D3	68Ω	%E8(2)
R43(1)	MB24EX	C3	68Ω	%E8(3)
R45(1)	MB24EX	C3	68Ω	%E9(14)
R46(1)	MB24EX	D3	68Ω	%E9(2)
R6(1)	MB24EX	C3	68Ω	%E9(3)
R42(1)	MB23EX	B3	68Ω	-A CHANGE COMING H
R34(1)	MB24EX	D6	68Ω	-ACKN PULSE H
R216(1)	MB24EX	C2	68Ω	ADR PAR ERR FLG H
R179(1)	MB23EX	C2	68.	APR ANY EBOX ERR FLG H
R40(1)	MB24EX	C4	68Ω	-APR MB PAR ERR H
R166(1)	MB23EX	D5	68Ω	-APR NXM ERR H
R39(1)	MB24EX	C4	68Ω	-APR S ADR P ERR H
R44(1)	MB24EX	D4	68Ω	-APR SBUS ERR H
R117(1)	MB25EX	B7	68.	CBUS PAR LEFT RE H
R113(1)	MB2 EX	B7	68	CBUS PAR RIGHT RE H
R103(1)	MB26EX	C6	68Ω	CCA REF H
R50(1)	MB26EX	B3	68Ω	-CCL CH TEST MB PAR H
R115(1)	MB2 EX	A7	68Ω	CCL DATA REVERSE H
R64(1)	MB21EX	C7	68Ω	CCL HOLD MEM H
R211(1)	MB25EX	A5	68Ω	CCL ODD WC PAR H
R212(1)	MB25EX	A5	68Ω	CCW ODD ADR PAR H
R172(1)	MB25EX	A5	68	CCW PAR BIT H
R100(1)	MB25EX	D3	68Ω	CH BUF 00-17 PAR H
R110(1)	MB25EX	D2	68Ω	CH BUF 18-35 PAR H
R126(1)	MB25EX	C5	68Ω	CH BUF ADR 0 H
R125(1)	MB25EX	C5	68Ω	CH BUF ADR 1 H
R124(1)	MB25EX	C5	68Ω	CH BUF ADR 2 H
R127(1)	MB25EX	C5	68Ω	CH BUF ADR 3 H
R128(1)	MB25EX	C5	68Ω	CH BUF ADR 4 H
R129(1)	MB25EX	C5	68Ω	CH BUF ADR 5 H
R170(1)	MB2 EX	B5	68Ω	CH BUF ADR 6 H
R169(1)	MB2 EX	C7	68Ω	CH BUF IN 00-17 PAR H

RESISTOR LOC(PIN)	SHOWN ON DRW#	REF	VALUE	TERMINATES SIGNAL
R123(1)	MB25EX	C7	68Ω	CH BUF IN 18-35 PAR H
R116(1)	MB25EX	A7	68Ω	CH BUF MB SEL H
R173(1)	MB25EX	A5	68Ω	CH BUF PAR BIT H
R118(1)	MB25EX	C3	68Ω	-CH BUF WR 06 H
R122(1)	MB25EX	B7	68Ω	CH REG 00-17 PAR H
R119(1)	MB25EX	B7	68Ω	CH REG 18-35 PAR H
R114(1)	MB25EX	B5	68Ω	CH REG HOLD H
R70(1)	MB21EX	B5	68Ω	CHAN BUF TO MB H
R83(1)	MB21EX	C7	68Ω	CHAN CORE BUSY H
R21(1)	MB21EX	C6	68Ω	-CHAN CORE BUSY H
R56(1)	MB21EX	B5	68Ω	CHAN EPT H
R58(1)	MB21EX	B5	68Ω	-CHAN EPT H
R57(1)	MB23EX	B6	68Ω	-CHAN MEM REF H
R105(1)	MB26EX	C6	68Ω	CHAN REF H
R77(1)	MB21EX	C5	68Ω	CHAN STATUS TO MB H
R53(1)	MB21EX	B2	68Ω	-CHAN TO MEM H
R55(1)	MB21EX	C5	68Ω	-CHAN WR MEM H
R29(1)	MB21EX	C7	68Ω	CLK A H
R88(1)	MB21EX	C7	68Ω	CLK B H
R174(1)	MB21EX	C7	68Ω	CLK C H
R (1)	MB21EX	B7	68Ω	CLK D H
R104(1)	MB21EX	B7	68Ω	CLK E H
R93(1)	MB21EX	B7	68Ω	CLK F H
R112(1)	MB21EX	B7	68Ω	CLK MB2 H
R96(1)	MB24EX	A5	68Ω	CORE BUSY A H
R60(1)	MB24EX	A5	68Ω	CORE BUSY IN A H
R59(1)	MB21EX	A2	68Ω	CORE RD IN PROG H
R111(1)	MB25EX	D7	68Ω	CRC CBUS OUT HOLD H
R206(1)	MB25EX	C5	68Ω	CRC CH BUF ADR 0 H
R208(1)	MB25EX	C5	68Ω	CRC CH BUF ADR 1 H
R207(1)	MB25EX	C5	68Ω	CRC CH BUF ADR 2 H
R203(1)	MB25EX	C5	68Ω	CRC CH BUF ADR 3 H
R201(1)	MB25EX	C5	68Ω	CRC CH BUF ADR 4 H
R200(1)	MB25EX	C5	68Ω	CRC CH BUF ADR 5 H
R132(1)	MB25EX	B5	68Ω	CRC CH BUF ADR 6 H
R54(1)	MB21EX	C5	68Ω	CSH CHAN CYC A H
R48(1)	MB21EX	C5	68Ω	-CSH CHAN CYC A H
R23(1)	MB26EX	B3	68Ω	-CSH EBOX CYC A H
R193(1)	MB26EX	D6	68Ω	CSH PAR BIT H
R219(1)	MB26EX	D7	68Ω	CSH PAR BIT 00 A H

RESISTOR LOC(PIN)	SHOWN ON DRW#	REF	VALUE	TERMINATES SIGNAL
R176(1)	MB26EX	C7	68Ω	CSH PAR BIT 00 B H
R220(1)	MB26EX	D7	68Ω	CSH PAR BIT 01 A H
R175(1)	MB26EX	C7	68Ω	CSH PAR BIT 01 B H
R222(1)	MB26EX	D7	68Ω	CSH PAR BIT 02 A H
R183(1)	MB26EX	C7	68Ω	CSH PAR BIT 02 B H
R221(1)	MB26EX	D7	68Ω	CSH PAR BIT 03 A H
R182(1)	MB26EX	C7	68Ω	CSH PAR BIT 03 B H
R19(1)	MB21EX	C3	68Ω	-DIAG LOAD FUNC 071 H
R167(1)	MB22EX	A7	68Ω	-DIAG READ FUNC 16X H
R62(1)	MB21EX	B2	68Ω	-EBOX DIAG CYC A H
R188(1)	MB22EX	A7	68Ω	EBUS EN H
R162(1)	MB22EX	A7	68Ω	-EBUS EN H
R191(1)	MB22EX	D7	68Ω	EBUS REG 00 H
R147(1)	MB26EX	D3	68Ω	EBUS REG 00 IN H
R190(1)	MB22EX	D7	68Ω	EBUS REG 01 H
R140(1)	MB26EX	D3	68Ω	EBUS REG 01 IN H
R185(1)	MB22EX	D7	68Ω	EBUS REG 02 H
R145(1)	MB26EX	D3	68Ω	EBUS REG 02 IN H
R187(1)	MB22EX	D7	68Ω	EBUS REG 03 H
R149(1)	MB26EX	D3	68Ω	EBUS REG 03 IN H
R152(1)	MB22EX	D6	68Ω	EBUS REG 04 H
R140(1)	MB26EX	C3	68Ω	EBUS REG 04 IN H
R151(1)	MB22EX	D6	68Ω	EBUS REG 05 H
R141(1)	MB26EX	C3	68Ω	EBUS REG 05 IN H
R150(1)	MB22EX	D6	68Ω	EBUS REG 06 H
R144(1)	MB26EX	C3	68Ω	EBUS REG 06 IN H
R153(1)	MB22EX	D6	68Ω	EBUS REG 07 H
R157(1)	MB22EX	D5	68Ω	EBUS REG 08 H
R155(1)	MB22EX	D5	68.	EBUS REG 14 H
R189(1)	MB22EX	D5	68Ω	EBUS REG 15 H
R192(1)	MB22EX	D5	68Ω	EBUS REG 16 H
R195(1)	MB22EX	D3	68Ω	EBUS REG 17 H
R194(1)	MB22EX	D3	68Ω	EBUS REG 18 H
R150(1)	MB22EX	D3	68Ω	EBUS REG 19 H
R159(1)	MB22EX	D3	68Ω	EBUS REG 20 H
R190(1)	MB22EX	D2	68Ω	EBUS REG 21 H
R197(1)	MB22EX	D2	68Ω	EBUS REG 22 H
R165(1)	MB22EX	D2	68Ω	EBUS REG 23 H
R163(1)	MB22EX	D2	68Ω	EBUS REG 24 H
R202(1)	MB22EX	D1	68Ω	EBUS REG 25 H

NOTE:

1. ALL TERMINATORS HAVE PIN TWO CONNECTED TO -2.0V AND ARE 5% 1/4WATT UNLESS OTHERWISE SPECIFIED
2. ENTRIES ARE SORTED BY SIGNAL NAME
3. % INDICATES OUTPUT OF DIP LOC AND ( ) INDICATES PIN NUMBER

"THIS DRAWING AND SPECIFICATIONS, HEREIN, ARE THE PROPERTY OF DIGITAL EQUIPMENT CORPORATION AND SHALL NOT BE REPRODUCED OR COPIED OR USED IN WHOLE OR IN PART AS THE BASIS FOR THE MANUFACTURE OR SALE OF ITEMS WITHOUT WRITTEN PERMISSION. COPYRIGHT © 1976, DIGITAL EQUIPMENT CORPORATION"

REVISIONS		
CHK	CHANGE NO.	REV
	M8537-00003	B
	P. GUGLIELMI	

REVISIONS		
CHK	CHANGE NO.	REV
		B1
	P. GUGLIELMI	

digital

M8537.RV8L4.427 | 27-OCT-75 21:48

DRN. C. Smith DATE 27-OCT-75
CHK'D. DATE
ENG. DATE
BOARD LOCATION: SHEET 1 OF 2
NEXT HIGHER ASSEMBLY: B-DD-M8537-0
FIRST USED ON OPTION/MODEL: KL10

TITLE: MBOX CONTROL #4 TERMINATORS

SIZE	CODE	NUMBER	REV.
D	CS	M8537-0-RES	B1

302

RESISTOR LOC(PIN)	SHOWN ON DRW#	REF	VALUE	TERMINATES SIGNAL
R199(1)	MB22EX	D1	68Ω	EBUS REG 26 H
R154(1)	MB22EX	D1	68Ω	EBUS REG 34 H
R156(1)	MB22EX	D1	68Ω	EBUS REG 35 H
R161(1)	MB22EX	B7	68Ω	EBUS SEL 1 H
R160(1)	MB22EX	B7	68Ω	EBUS SEL 2 H
R92(1)	MB26EX	B2	68Ω	ERA SEL H
R37(1)	MB23EX	C2	68Ω	ERR HOLD H
R196(1)	MB23EX	C2	68Ω	-HOLD ERA H
R227(1)	MB23EX	C1	68Ω	HOLD ERR REG H
R142(1)	MB22EX	B5	68Ω	-LOAD EBUS REG A H
R143(1)	MB22EX	A5	68Ω	-LOAD EBUS REG B H
R94(1)	MB24EX	C6	68Ω	-LOAD MB # H
R213(1)	MB25EX	D5	68Ω	MB CH BUF 00-17 PAR H
R214(1)	MB25EX	D5	68Ω	MB CH BUF 18-35 PAR H
R90(1)	MB24EX	B7	68Ω	MB DATA CODE 1 H
R89(1)	MB24EX	B7	68Ω	MB DATA CODE 2 H
R98(1)	MB24EX	B7	68Ω	MB DATA SOURCE 1 H
R101(1)	MB24EX	B7	68Ω	MB DATA SOURCE 2 H
R218(1)	MB24EX	D2	68Ω	MB PAR ERR H
R4(1)	MB24EX	D3	68Ω	MB PAR ODD H
R61(1)	MB21EX	D7	68Ω	MB REQ HOLD H
R5(1)	MB24EX	D3	68Ω	-MB TEST PAR A IN H
R35(1)	MB26EX	A3	68Ω	-MB TEST PAR B IN H
R104(1)	MB24EX	B7	68Ω	MB WD SEL 1 H
R106(1)	MB24EX	B7	68Ω	MB WD SEL 2 H
R3(1)	MB23EX	D3	68Ω	MBOX NXM ERR H
R130(1)	MB23EX	D4	68Ω	MBOX NXM ERR CLR H
R237(1)	MB24EX	A5	68Ω	MB24 CORE BUSY A H
R52(1)	MB24EX	A5	68Ω	-MB24 CORE BUSY A H
R95(1)	MB24EX	C4	68Ω	MEM ADR PAR ERR H
R91(1)	MB24EX	D4	68Ω	MEM ERROR H
R171(1)	MB25EX	C3	68Ω	MEM PAR IN H
R11(1)	MB24EX	A2	68Ω	MEM RD RQ A H
R72(1)	MB24EX	A2	68Ω	-MEM RD RQ A H
R41(1)	MB24EX	A2	68Ω	MEM RD RQ B H
R9(1)	MB23EX	C3	68Ω	MEM START C H
R32(1)	MB23EX	C3	68Ω	-MEM START C H
R205(1)	MB25EX	B3	68Ω	-MEM TO C EN H
R204(1)	MB25EX	B3	68Ω	MEM TO C SEL 1 H
R209(1)	MB25EX	B3	68Ω	MEM TO C SEL 2 H

RESISTOR LOC(PIN)	SHOWN ON DRW#	REF	VALUE	TERMINATES SIGNAL
R74(1)	MB24EX	A2	68Ω	-MEM WR RQ A H
R97(1)	MB26EX	C6	68Ω	MEM WRITE H
R20(1)	MB23EX	C3	68Ω	MR RESET 06 H
R236(1)	MB23EX	C3	68Ω	MR RESET A H
R223(1)	MB23EX	C3	68Ω	-MR RESET A H
R84(1)	MB21EX	A3	68Ω	-MTR CCA WRITEBACK H
R73(1)	MB23EX	C6	68Ω	NXM CLR DONE H
R135(1)	MB23EX	C6	68Ω	-NXM CLR DONE H
R18(1)	MB23EX	D6	68Ω	NXM CLR T0 H
R71(1)	MB23EX	B3	68Ω	-NXM CRY A H
R70(1)	MB23EX	B1	68Ω	-NXM CRY B H
R233(1)	MB23EX	B6	68Ω	NXM FLG H
R36(1)	MB23EX	C6	68Ω	-NXM FLG H
R164(1)	MB24EX	D5	68Ω	NXM T2 H
R81(1)	MB24EX	D5	68Ω	NXM T3 H
R80(1)	MB24EX	C5	68Ω	NXM T4 H
R79(1)	MB24EX	C5	68Ω	NXM T5 H
R231(1)	MB24EX	B5	68Ω	NXM T6 H
R38(1)	MB24EX	B3	68Ω	-NXM T6,7 H
R121(1)	MB25EX	C7	68Ω	PAG MB 00-17 PAR H
R120(1)	MB25EX	C7	68Ω	PAG MB 18-35 PAR H
R186(1)	MB22EX	D5	68Ω	PAGED REF H
R109(1)	MB26EX	D3	68Ω	PF HOLD 01 IN H
R102(1)	MB26EX	D3	68Ω	PF HOLD 02 IN H
R107(1)	MB26EX	D3	68Ω	PF HOLD 03 IN H
R100(1)	MB26EX	C3	68Ω	PF HOLD 04 IN H
R99(1)	MB26EX	C3	68Ω	PF HOLD 05 IN H
R146(1)	MB22EX	D6	68Ω	PT CACHE H
R178(1)	MB23EX	B2	68Ω	RQ HOLD DLY H
R181(1)	MB23EX	C3	68Ω	RQ HOLD FF H
R215(1)	MB24EX	D2	68Ω	SBUS ERR FLG H

NOTE:

1. ALL TERMINATORS HAVE PIN TWO CONNECTED TO -2.0V AND ARE 5% 1/4WATT UNLESS OTHERWISE SPECIFIED
2. ENTRIES ARE SORTED BY SIGNAL NAME
3. % INDICATES OUTPUT OF DIP LOC AND () INDICATES PIN NUMBER

"THIS DRAWING AND SPECIFICATIONS, HEREIN, ARE THE PROPERTY OF DIGITAL EQUIPMENT CORPORATION A D SHALL NOT BE REPRODUCED OR COPIED OR USED IN WHOLE OR IN PART A THE BA IS FOR THE MA UFACTURE OR SALE OF ITEMS WITHOUT WR'TTEN PERMISSION.
COPYRIGHT © 1976, DIGITAL EQUIPMENT CORPORATION"

REVISIONS		
CHK	CHANGE NO.	REV

digital

DRN. C Smith DATE 27-OCT-75 ENG. P. Lindsay DATE 12-Feb-76
CHK'D. DATE BOARD LOCATION: SHEET 2 OF 2
M8532.RVB[4,427] 27-OCT-75 21:48 NEXT HIGHER ASSEMBLY:
FIRST USED ON OPTION/MODEL: KL10 B-DD-M8537-0

TITLE: MBOX CONTROL #4 TERMINATORS

SIZE	CODE	NUMBER	REV.
D	CS	M8537-0-RES	B1

303

REVISION CONTROL SHEET

CUSTOMER PRINT SET	MFG SET	DRAWING NO	NO OF SHT	DESCRIPTION	OPTION NO/FILE DATE	REVISIONS (NEW LAYOUT VERSION)
			-	MODULE REVISION		D
		D-UA-M8537-Ø-Ø	5	MBOX CONTROL 4		D
		D-CS-M8537-Ø-MBZ1	1	CORE BUSY, MB IN SEL N, CHAN CTL		C
		D-CS-M8537-Ø-MBZ2	1	EBUS REG, MBZ DIAG MIX		B
		D-CS-M8537-Ø-MBZ3	1	NXM CONTROL & TIMEOUT, HOLD ERA		C
		D-CS-M8537-Ø-MBZ4	1	NXM T(N), MBOX ERR FLAGS		C
		D-CS-M8537-Ø-MBZ5	1	MBOX & CHAN PAR BIT DATA PATHS		B
		D-CS-M8537-Ø-MBZ6	1	EBUS REG IN MIX, CSH PAR BIT		C
		D-CS-M8537-Ø-MBZ7	1	MBOX CONTROL #4 POWER, GND, CAP		B
		D-CS-M8537-Ø-RES	2	MBOX CONTROL #4 TERMINATORS		C
		K-CO-M8537-Ø-4	1	MBOX CONTROL 4 (CALDEC DATA BASE)		C
		D-AH-M8537-Ø-5	4	MBOX CONTROL 4		B
		B-MH-M8537-Ø-6	1	MODULE ECO HISTORY		REF
		5010927	-	ETCH CIRCUIT BOARD		C
		P00-M8537-ØØ		PROCESS SHEET (REF ONLY)		-

CUSTOMER PRINT SET CODES

X = PRINT OF DOCUMENT INCLUDED IN PRINT SET
C = INCLUDES ALL PRINTS INDICATED ON DOCUMENT
S = CONFIDENTIAL AUTHORIZED SIGNATURE REQUIRED

ECO NO: 05004

TITLE		SIZE	CODE	NUMBER	REV
MBOX CONTROL 4	SHEET 3 OF 3	B	DD	M8537-Ø	D

MR

THIS DRAWING AND SPECIFICATIONS, HEREIN, ARE THE PROPERTY OF DIGITAL EQUIPMENT CORPORATION AND SHALL NOT BE REPRODUCED OR COPIED OR USED IN WHOLE OR IN PART AS THE BASIS FOR THE MANUFACTURE OR SALE OF ITEMS WITHOUT WRITTEN PERMISSION.
COPYRIGHT © 1976 DIGITAL EQUIPMENT CORPORATION

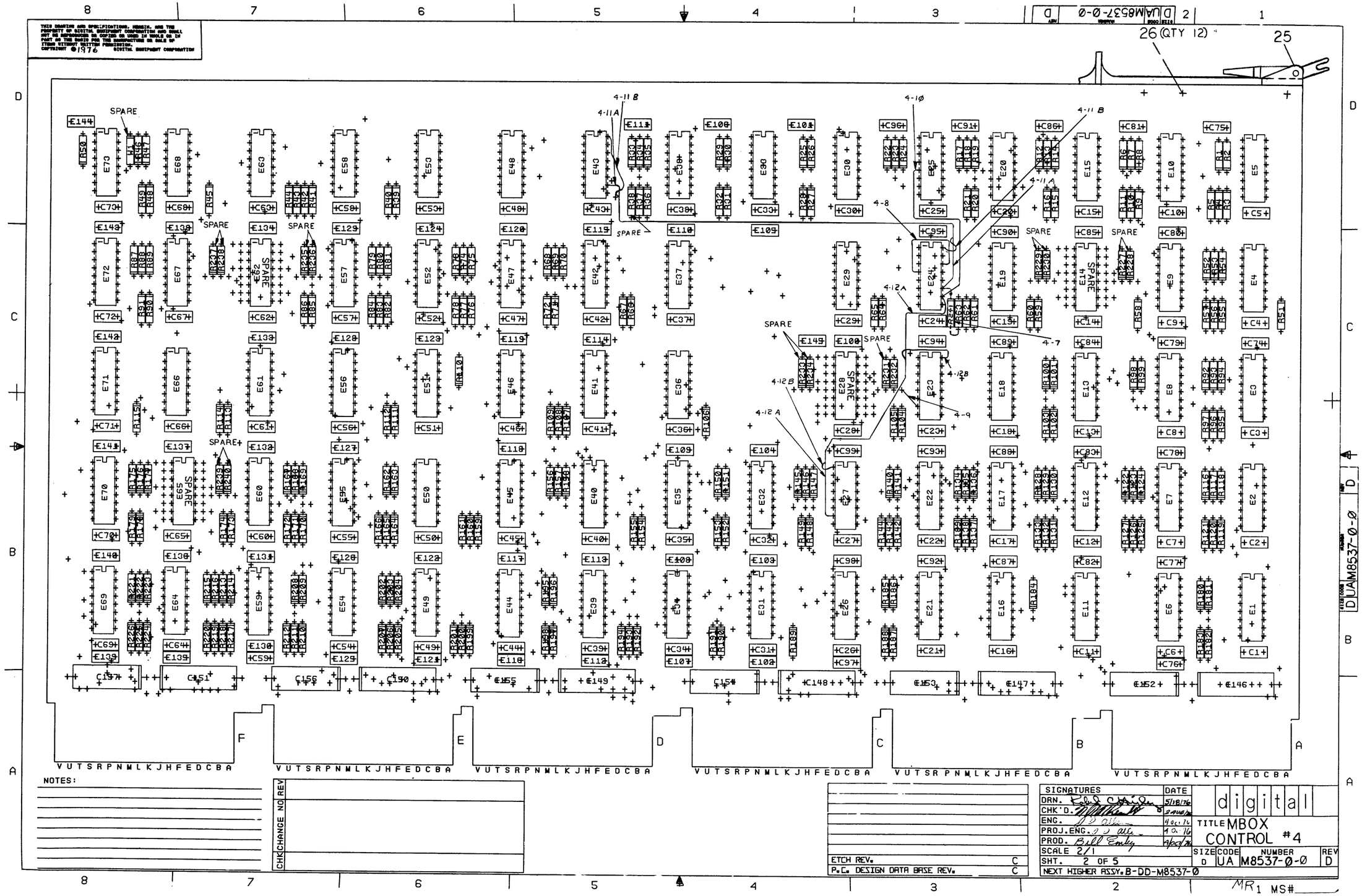

305

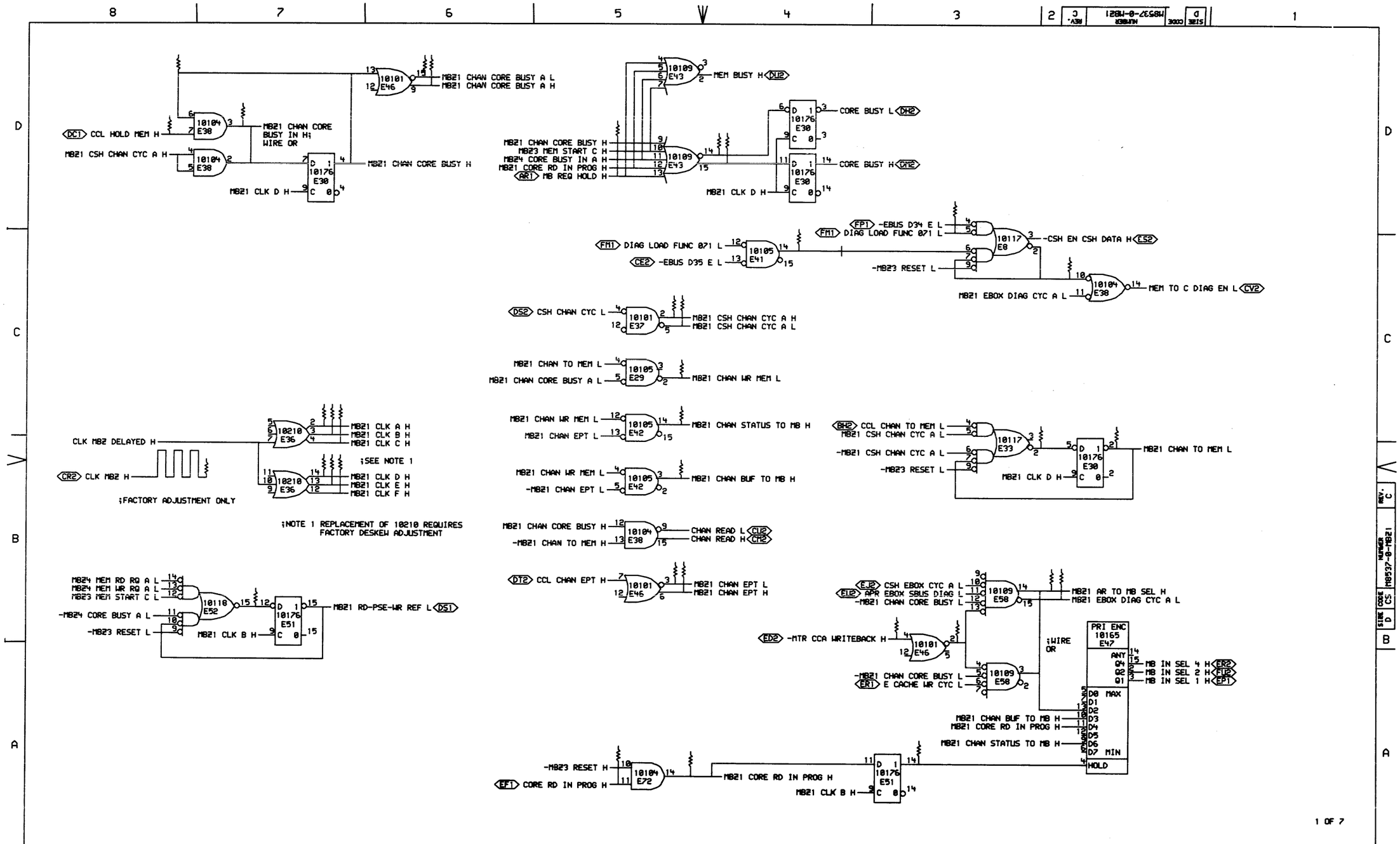

"THIS DRAWING AND SPECIFICATIONS, HEREIN, ARE THE PROPERTY OF DIGITAL EQUIPMENT CORPORATION AND SHALL NOT BE REPRODUCED OR COPIED OR USED IN WHOLE OR IN PART AS THE BASIS FOR THE MANUFACTURE OR SALE OF ITEMS WITHOUT WRITTEN PERMISSION.
"COPYRIGHT © 1976, DIGITAL EQUIPMENT CORPORATION"

REVISIONS		
CHK	CHANGE NO.	REV

digital

DRN. | DATE 14-SEP-76 | ENG. | DATE 17-Sep-76 | TITLE: CORE BUSY, MB IN SEL N, CHAN CTL

CHK. | DATE 7/15/76 | BOARD LOCATION: 4A-20 | SHEET 1 OF 1

MB21ER.DBL[4,125] 25-JUL-76 09:18 | NEXT HIGHER ASSEMBLY: B-DD-M8537-0

FIRST USED ON OPTION/MODEL: KL10

SIZE	CODE	NUMBER	REV.
D	CS	M8537-0-MB21	C

306

1 MR

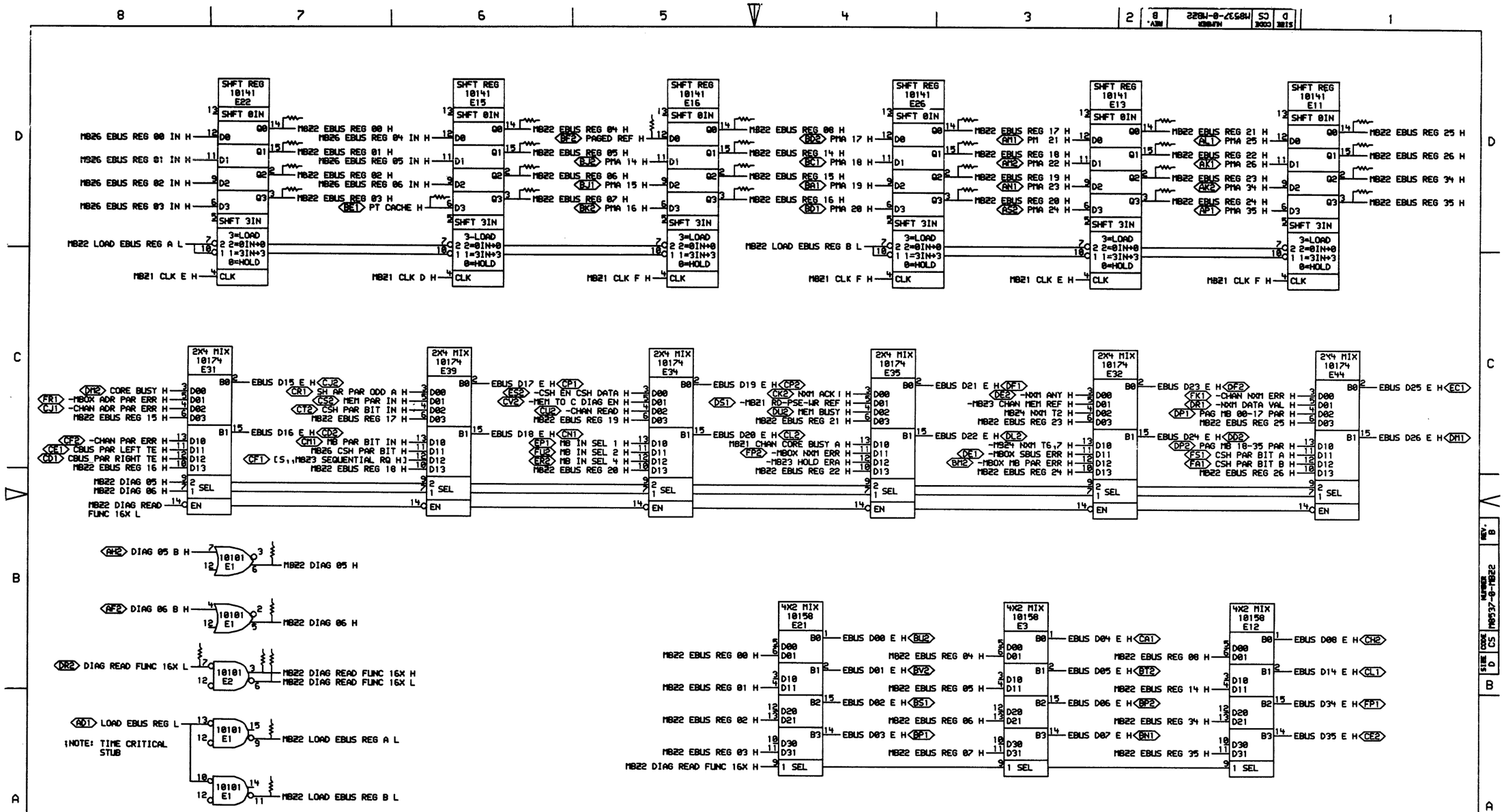

"THIS DRAWING AND SPECIFICATIONS, HEREIN, ARE THE PROPERTY OF DIGITAL EQUIPMENT CORPORATION AND SHALL NOT BE REPRODUCED OR COPIED OR USED IN WHOLE OR IN PART AS THE BASIS FOR THE MANUFACTURE OR SALE OF ITEMS WITHOUT WRITTEN PERMISSION. COPYRIGHT © 1976, DIGITAL EQUIPMENT CORPORATION"

REVISIONS		
CHK	CHANGE NO.	REV

digital

DRN. | DATE 14-SEP-76 | ENG. | DATE 17SEP76
CHK'D | DATE 11/4/76 | BOARD LOCATION: 4BF28
SHEET 1 OF 1
MB22ER.DRW[4,175] 29-JUL-76 09:12
FIRST USED ON OPTION/MODEL: KL10
NEXT HIGHER ASSEMBLY: B-DD-M8537-0

TITLE: EBUS REG, MB2 DIAG MIX

SIZE	CODE	NUMBER	REV.
D	CS	M8537-0-MB22	B

307

MR

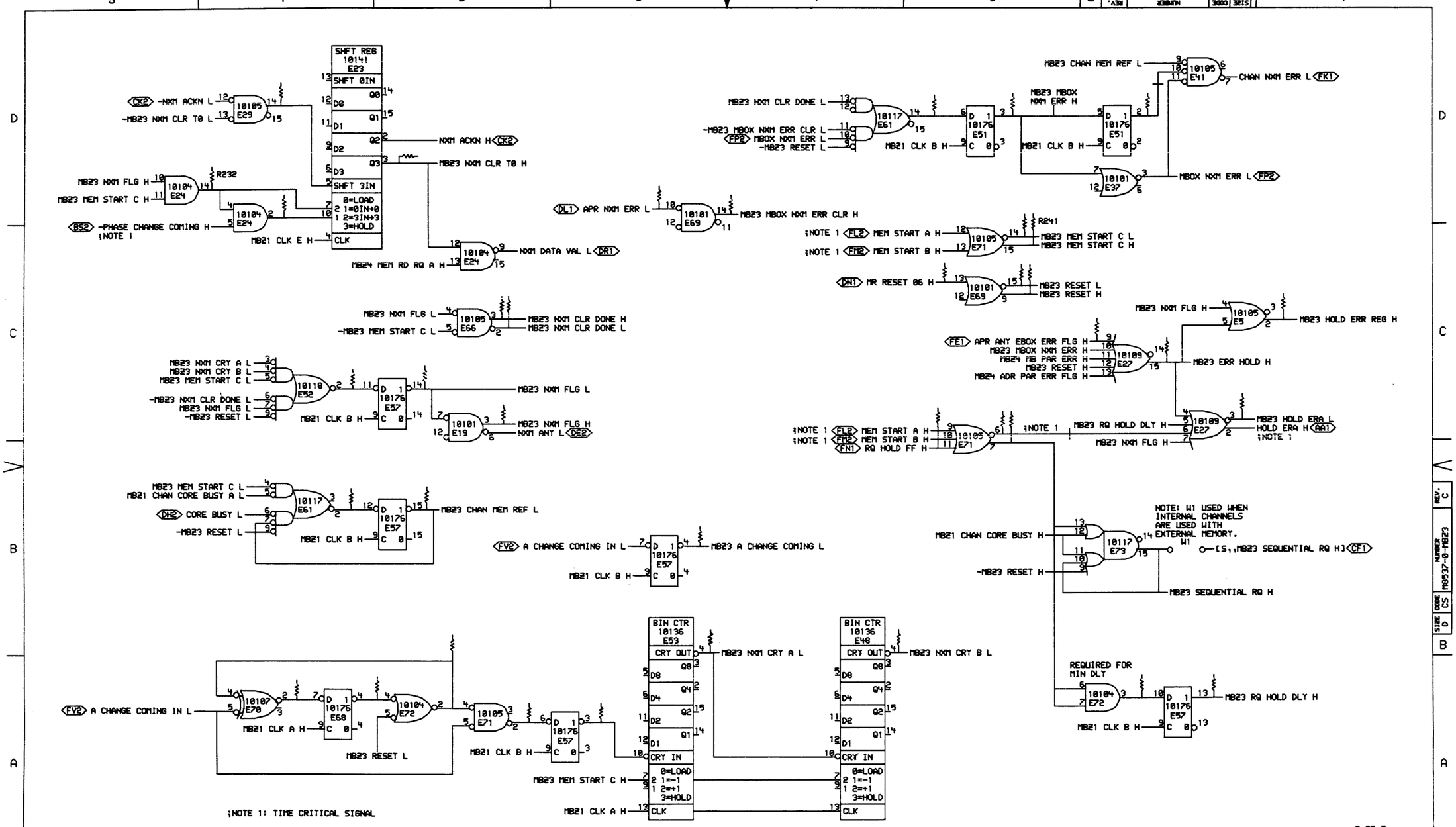

"THIS DRAWING AND SPECIFICATIONS, HEREIN, ARE THE PROPERTY OF DIGITAL EQUIPMENT CORPORATION AND SHALL NOT BE REPRODUCED OR COPIED OR USED IN WHOLE OR IN PART AS THE BASIS FOR THE MANUFACTURE OR SALE OF ITEMS WITHOUT WRITTEN PERMISSION.
COPYRIGHT © 1976, DIGITAL EQUIPMENT CORPORATION"

REVISIONS		
CHK	CHANGE NO.	REV

digital

DRN. | DATE 14-SEP-76 | ENG. | DATE 17 SEP 76
CHK. | DATE 9/14/76 | BOARD LOCATION: 4AF20
SHEET 1 OF 1
MB23SEP.DRW[4,175] 24-AUG-76 11:18 | NEXT HIGHER ASSEMBLY: B-DD-M8537-0
FIRST USED ON OPTION/MODEL: KL10

TITLE: NXM CONTROL & TIMEOUT, HOLD ERA

SIZE	CODE	NUMBER	REV.
D	CS	M8537-0-MB23	C

308

1 MR

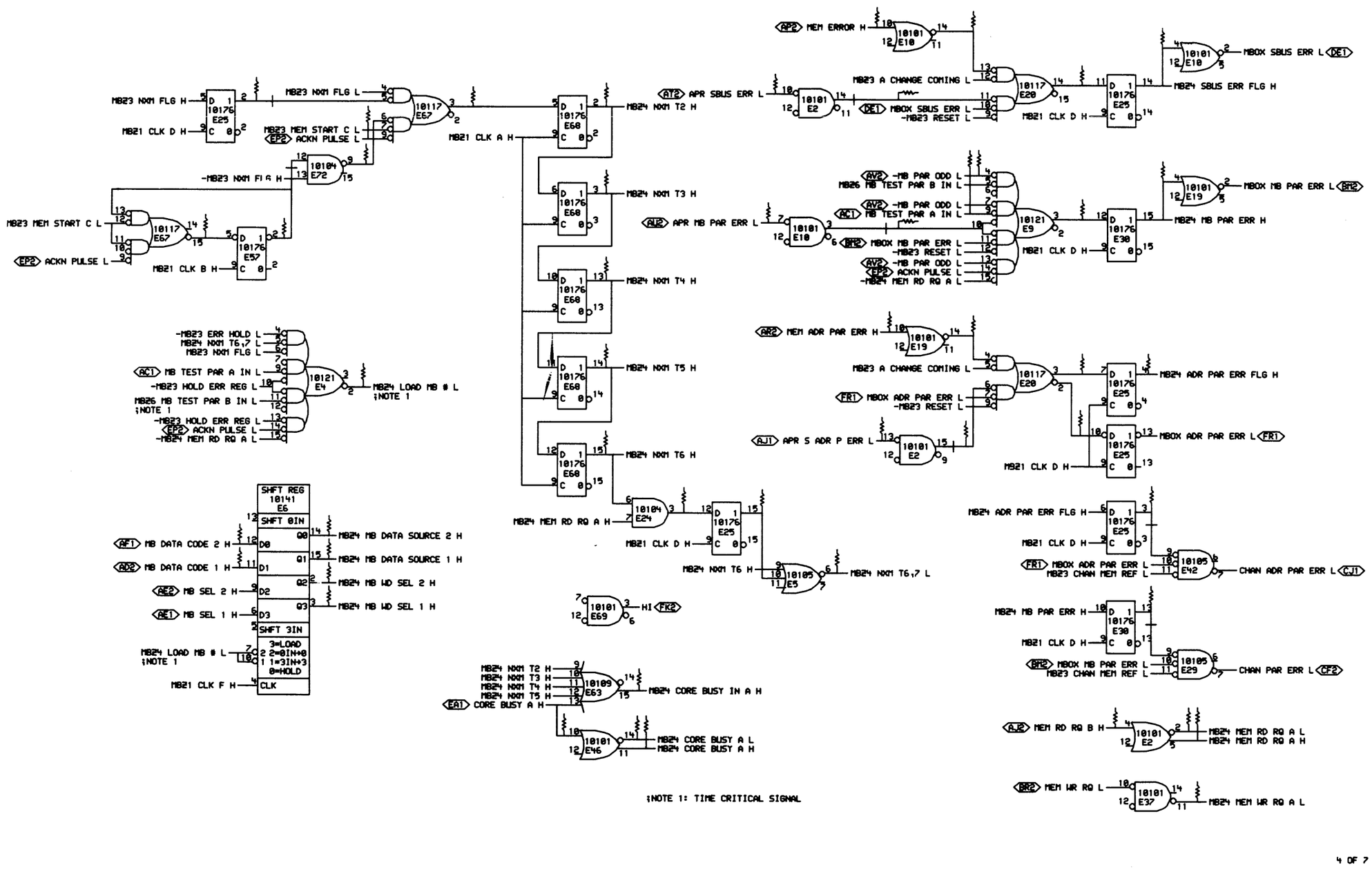

"THIS DRAWING AND SPECIFICATIONS, HEREIN, ARE THE PROPERTY OF DIGITAL EQUIPMENT CORPORATION AND SHALL NOT BE REPRODUCED OR COPIED OR USED IN WHOLE OR IN PART AS THE BASIS FOR THE MANUFACTURE OR SALE OF ITEMS WITHOUT WRITTEN PERMISSION. COPYRIGHT © 1976, DIGITAL EQUIPMENT CORPORATION"

REVISIONS		
CHK	CHANGE NO.	REV

digital

MB24HER.DRW[4,175] 24-AUG-76 11:20

FIRST USED ON OPTION/MODEL: KL10

DRN. J. Lomay DATE 14-SEP-76
CHK. DATE 9/15/76
ENG. DATE 17 Sept 76
BOARD LOCATION: 4AF20
SHEET 1 OF 1
NEXT HIGHER ASSEMBLY: B-DD-M8537-0

TITLE: NXM T(N), MBOX ERR FLAGS

SIZE	CODE	NUMBER	REV.
D	CS	M8537-0-MB24	C

309

1 MR

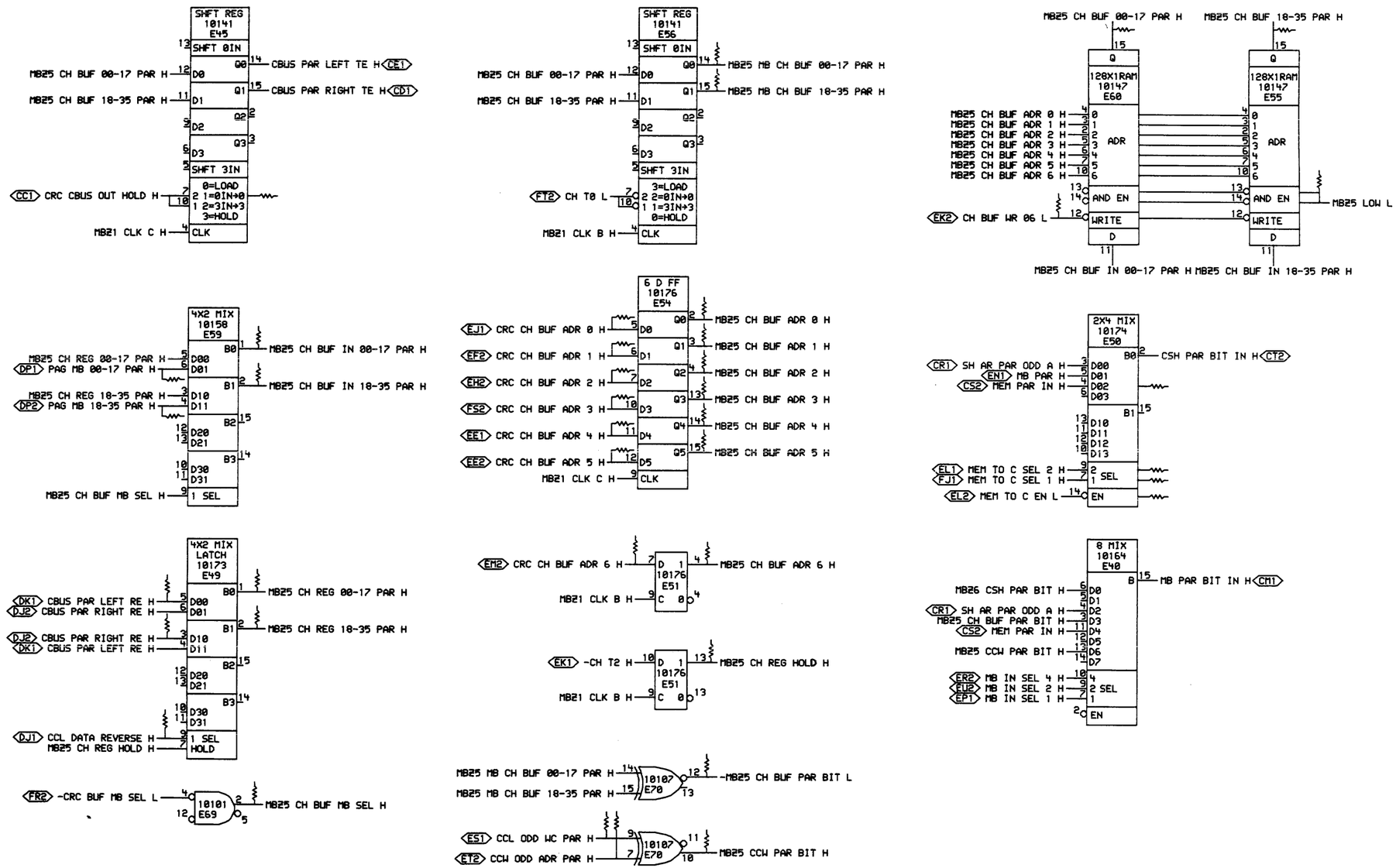

5 OF 7

"THIS DRAWING AND SPECIFICATIONS, HEREIN, ARE THE PROPERTY OF DIGITAL EQUIPMENT CORPORATION AND SHALL NOT BE REPRODUCED OR COPIED OR USED IN WHOLE OR IN PART AS THE BASIS FOR THE MANUFACTURE OR SALE OF ITEMS WITHOUT WRITTEN PERMISSION. COPYRIGHT © 1976, DIGITAL EQUIPMENT CORPORATION"

REVISIONS		
CHK	CHANGE NO.	REV

digital

DRN. Toomey DATE 14-SEP-76 ENG. John D Allen DATE 13 Sept 76
CHK'D DATE BOARD LOCATION: 4AF20
MB25ER.DRW[4,175] 29-JUL-76 09:21 SHEET 1 OF 1 NEXT HIGHER ASSEMBLY: B-DD-M8537-0
FIRST USED ON OPTION/MODEL: KL10

TITLE: MBOX & CHAN PAR BIT DATA PATHS

SIZE	CODE	NUMBER	REV.
D	CS	M8537-0-MB25	B

310

1 MR

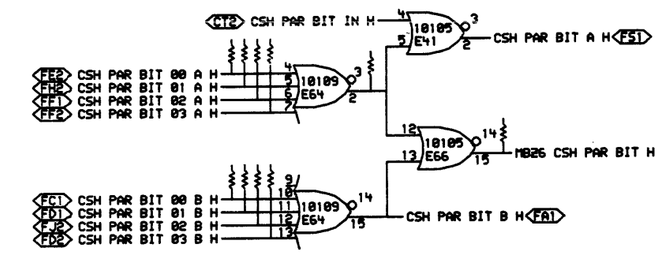

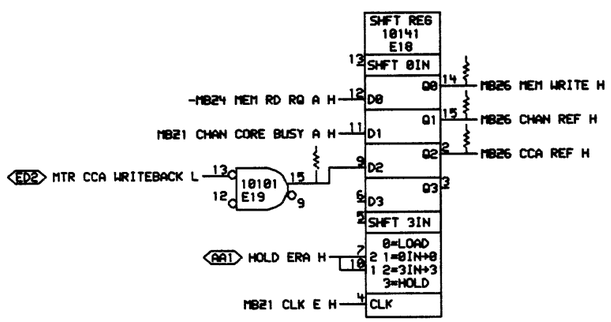

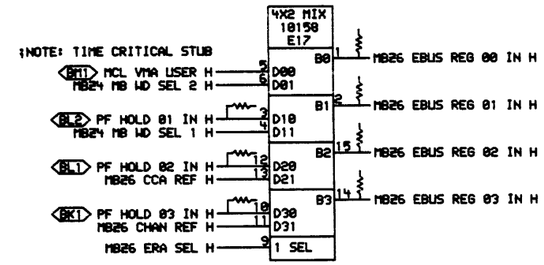

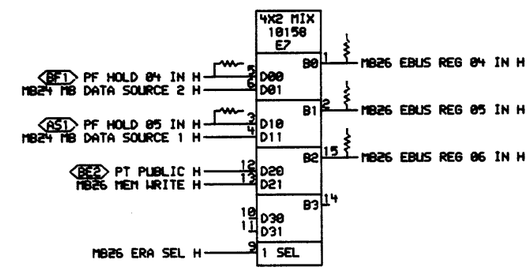

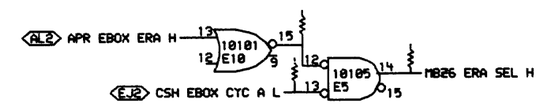

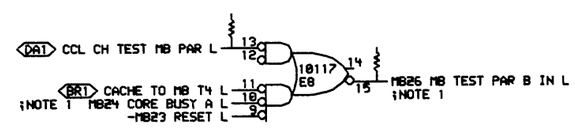

;NOTE 1: TIME CRITICAL SIGNAL

6 OF 7

"THIS DRAWING AND SPECIFICATIONS, HEREIN, ARE THE PROPERTY OF DIGITAL EQUIPMENT CORPORATION AND SHALL NOT BE REPRODUCED OR COPIED OR USED IN WHOLE OR IN PART AS THE BASIS FOR THE MANUFACTURE OR SALE OF ITEMS WITHOUT WRITTEN PERMISSION. COPYRIGHT © 1976, DIGITAL EQUIPMENT CORPORATION"

REVISIONS		
CHK	CHANGE NO.	REV

DRN. 14-SEP-76 DATE ENG. 17 Sept 76 DATE
CHK'D 9/10/76 DATE BOARD LOCATION: 4AF20
SHEET 1 OF 1
MB26ER.DPML4.175] 24-AUG-76 11:34 NEXT HIGHER ASSEMBLY:
FIRST USED ON OPTION/MODEL: KL10 B-DD-M8537-0

TITLE: EBUS REG IN MIX CSH PAR BIT

SIZE	CODE	NUMBER	REV.
D	CS	M8537-0-MB26	C

311

1 MR

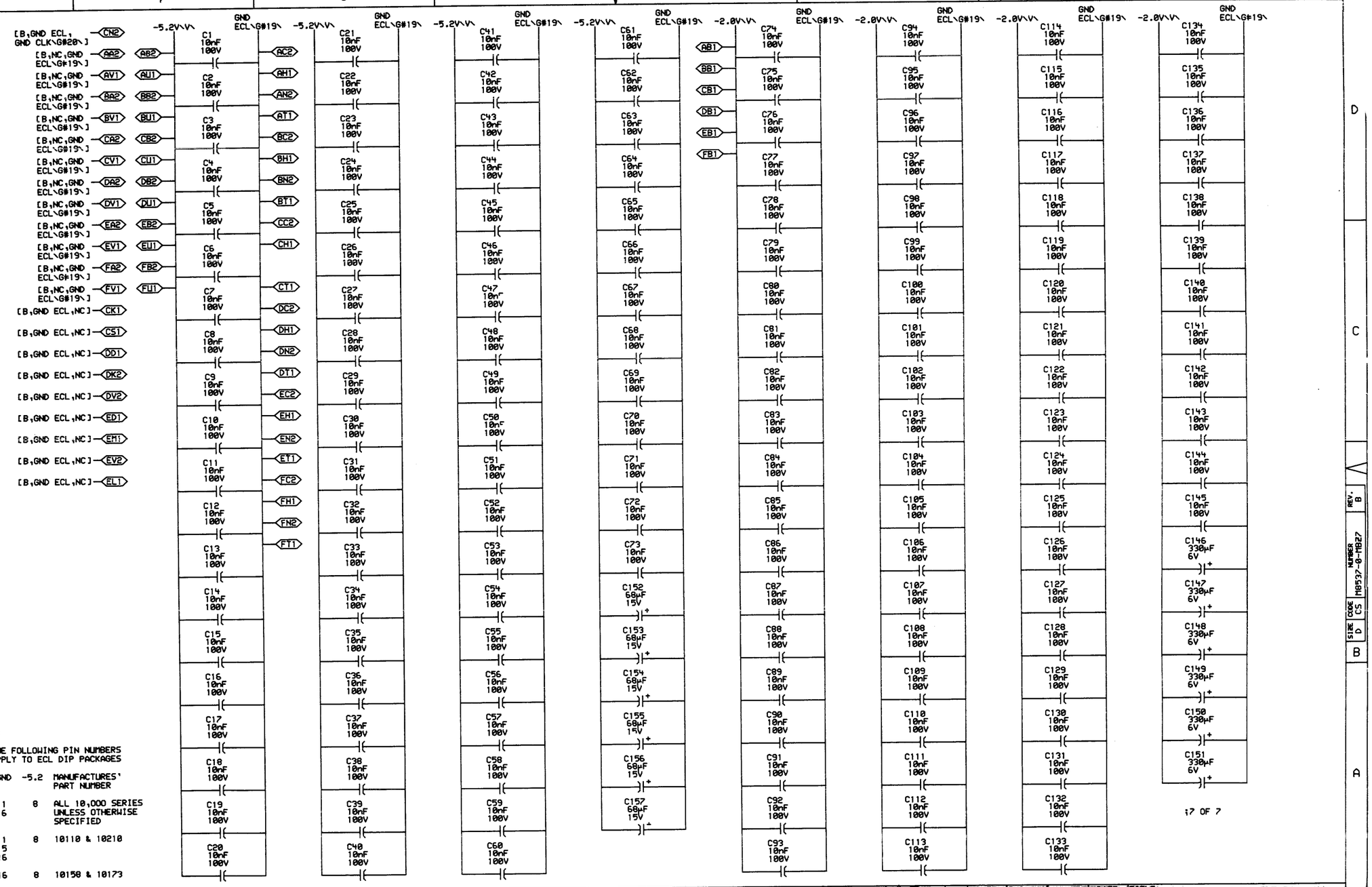

NOTE:

1. THE FOLLOWING PIN NUMBERS APPLY TO ECL DIP PACKAGES

GND	-5.2	MANUFACTURES' PART NUMBER
1 16	8	ALL 10,000 SERIES UNLESS OTHERWISE SPECIFIED
1 15 16	8	10110 & 10210
16	8	10158 & 10173

"THIS DRAWING AND SPECIFICATIONS, HEREIN, ARE THE PROPERTY OF DIGITAL EQUIPMENT CORPORATION AND SHALL NOT BE REPRODUCED OR COPIED OR USED IN WHOLE OR IN PART AS THE BASIS FOR THE MANUFACTURE OR SALE OF ITEMS WITHOUT WRITTEN PERMISSION.
COPYRIGHT © 1976, DIGITAL EQUIPMENT CORPORATION"

REVISIONS		
CHK	CHANGE NO.	REV

digital

DRN: D. Toomey DATE 14-SEP-76
CHK: D. Stephenson DATE 9/15/76
ENG: John D. Allen DATE 17 SEPT 76
MB27ER.DRW[4,175] 27-JUL-76 15:37
BOARD LOCATION: 4AF20
SHEET 1 OF 1
FIRST USED ON OPTION/MODEL: KL10
NEXT HIGHER ASSEMBLY: B-DD-M8537-0

TITLE: MBOX CONTROL #4 POWER, GND, CAP

SIZE	CODE	NUMBER	REV.
D	CS	M8537-0-MB27	B

310.

RESISTOR LOC(PIN)	SHOWN ON DRW#	REF	VALUE	TERMINATES SIGNAL
R13(1)	MB24	D3	68Ω	%E10(14)
R1(1)	MB26	B3	68Ω	%E10(15)
R52(1)	MB24	C3	68Ω	%E10(3)
R19(1)	MB24	C3	68Ω	%E19(14)
R103(1)	MB26	B7	68Ω	%E19(15)
R16(1)	MB24	D3	68Ω	%E2(14)
R20(1)	MB24	B3	68Ω	%E2(15)
R18(1)	MB24	D2	68Ω	%E20(14)
R21(1)	MB24	C2	68Ω	%E20(2)
R24(1)	MB24	C2	68Ω	%E20(3)
R232(1)	MB23	D7	68Ω	%E24(14)
R104(1)	MB23	D7	68Ω	%E24(2)
R17(1)	MB24	B5	68Ω	%E24(3)
R3(1)	MB24	B4	68Ω	%E25(15)
R89(1)	MB24	D7	68Ω	%E25(2)
R66(1)	MB24	B2	68Ω	%E25(3)
R105(1)	MB23	D7	68Ω	%E29(14)
R64(1)	MB24	B2	68Ω	%E30(13)
R26(1)	MB21	B2	68Ω	%E33(2)
R98(1)	MB21	C4	68Ω	%E41(14)
R25(1)	MB21	D4	68Ω	%E43(14)
R23(1)	MB21	D4	68Ω	%E43(15)
R40(1)	MB21	B3	68Ω	%E46(2)
R75(1)	MB21	A3	68Ω	%E51(14)
R108(1)	MB23	D2	68Ω	%E51(2)
R110(1)	MB21	B7	68Ω	%E52(15)
R80(1)	MB23	C7	68Ω	%E52(2)
R88(1)	MB24	C7	68Ω	%E57(2)
R39(1)	MB23	A5	68Ω	%E57(3)
R112(1)	MB23	D3	68Ω	%E61(14)
R79(1)	MB23	B7	68Ω	%E61(2)
R109(1)	MB26	D6	68Ω	%E64(2)
R86(1)	MB24	C7	68Ω	%E67(15)
R49(1)	MB24	D6	68Ω	%E67(3)
R87(1)	MB23	A6	68Ω	%E68(4)
R48(1)	MB23	A7	68Ω	%E70(2)
R85(1)	MB23	A6	68Ω	%E71(2)
R147(1)	MB23	C3	68Ω	%E71(6)
R46(1)	MB23	C3	68Ω	%E71(7)
R175(1)	MB23	B6	68Ω	%E72(2)

RESISTOR LOC(PIN)	SHOWN ON DRW#	REF	VALUE	TERMINATES SIGNAL
R84(1)	MB23	A2	68Ω	%E72(3)
R90(1)	MB24	D6	68Ω	%E72(9)
R32(1)	MB21	C2	68Ω	%E8(2)
R22(1)	MB24	C2	68Ω	%E9(3)
R54(1)	MB24	D6	68Ω	-ACKN PULSE H
R143(1)	MB23	C2	68Ω	APR ANY EBOX ERR FLG H
R9(1)	MB24	C4	68Ω	-APR MB PAR ERR H
R226(1)	MB23	D5	68Ω	-APR NXM ERR H
R118(1)	MB24	B3	68Ω	-APR S ADR P ERR H
R119(1)	MB24	D4	68Ω	-APR SBUS ERR H
R204(1)	MB25	B7	68Ω	CBUS PAR LEFT RE H
R203(1)	MB25	B7	68Ω	CBUS PAR RIGHT RE H
R92(1)	MB26	B3	68Ω	-CCL CH TEST MB PAR H
R201(1)	MB25	A7	68Ω	CCL DATA REVERSE H
R36(1)	MB21	D8	68Ω	CCL HOLD MEM H
R178(1)	MB25	A5	68Ω	CCL ODD WC PAR H
R179(1)	MB25	A5	68Ω	CCW ODD ADR PAR H
R170(1)	MB25	C3	68Ω	-CH BUF WR 06 H
R106(1)	MB21	B7	68Ω	CLK MB2 H
R41(1)	MB24	A5	68Ω	CORE BUSY A H
R91(1)	MB21	A5	68Ω	CORE RD IN PROG H
R159(1)	MB25	D7	68Ω	CRC CBUS OUT HOLD H
R209(1)	MB25	C5	68Ω	CRC CH BUF ADR 0 H
R208(1)	MB25	C5	68Ω	CRC CH BUF ADR 1 H
R211(1)	MB25	C5	68Ω	CRC CH BUF ADR 2 H
R210(1)	MB25	C5	68Ω	CRC CH BUF ADR 3 H
R206(1)	MB25	C5	68Ω	CRC CH BUF ADR 4 H
R202(1)	MB25	C5	68Ω	CRC CH BUF ADR 5 H
R111(1)	MB25	B5	68Ω	CRC CH BUF ADR 6 H
R2(1)	MB26	B3	68Ω	-CSH EBOX CYC A H
R222(1)	MB26	D7	68Ω	CSH PAR BIT 00 A H
R220(1)	MB26	C7	68Ω	CSH PAR BIT 00 B H
R223(1)	MB26	D7	68Ω	CSH PAR BIT 01 A H
R219(1)	MB26	C7	68Ω	CSH PAR BIT 01 B H
R225(1)	MB26	D7	68Ω	CSH PAR BIT 02 A H
R218(1)	MB26	C7	68Ω	CSH PAR BIT 02 B H
R224(1)	MB26	D7	68Ω	CSH PAR BIT 03 A H
R215(1)	MB26	C7	68Ω	CSH PAR BIT 03 B H
R99(1)	MB21	D3	69Ω	-DIAG LOAD FUNC 071 H
R120(1)	MB22	B8	68Ω	-DIAG READ FUNC 16X H

RESISTOR LOC(PIN)	SHOWN ON DRW#	REF	VALUE	TERMINATES SIGNAL
R182(1)	MB24	B7	68Ω	MB DATA CODE 1 H
R180(1)	MB24	B7	68Ω	MB DATA CODE 2 H
R58(1)	MB24	D3	68Ω	MB PAR ODD H
P35(1)	MB21	D5	68Ω	MB REQ HOLD H
P57(1)	MB24	D3	68Ω	-MB TEST PAR A IN H
P60(1)	MB21	B2	68Ω	MB21 AR TO MB SEL H
R72(1)	MB21	B5	68Ω	MB21 CHAN BUF TO MB H
P50(1)	MB21	D8	68Ω	MB21 CHAN CORE BUSY H
R100(1)	MB21	D6	68Ω	MB21 CHAN CORE BUSY A H
R65(1)	MB21	D6	68Ω	-MB21 CHAN CORE BUSY A H
R27(1)	MB21	D7	68Ω	MB21 CHAN CORE BUSY IN H
R70(1)	MB21	B5	68Ω	MB21 CHAN EPT H
R67(1)	MB21	B5	68Ω	-MB21 CHAN EPT H
R71(1)	MB21	C5	68Ω	MB21 CHAN STATUS TO MB H
P29(1)	MB21	B2	68Ω	-MB21 CHAN TO MEM H
R69(1)	MB21	C5	68Ω	-MB21 CHAN WR MEM H
R45(1)	MB21	C7	68Ω	MB21 CLK A H
P83(1)	MB21	C7	68Ω	MB21 CLK B H
P207(1)	MB21	C7	68Ω	MB21 CLK C H
P14(1)	MB21	B7	68Ω	MB21 CLK D H
P101(1)	MB21	B7	68Ω	MB21 CLK E H
R181(1)	MB21	B7	68Ω	MB21 CLK F H
P33(1)	MB21	A5	68Ω	MB21 CORE RD IN PROG H
P37(1)	MB21	C5	68Ω	MB21 CSH CHAN CYC A H
P30(1)	MB21	C5	68Ω	-MB21 CSH CHAN CYC A H
P31(1)	MB21	B2	68Ω	-MB21 EBOX DIAG CYC A H
P197(1)	MB22	B7	68Ω	MB22 DIAG 05 H
R199(1)	MB22	B7	68Ω	MB22 DIAG 06 H
R131(1)	MB22	B7	68Ω	MB22 DIAG READ FUNC 16X H
R195(1)	MB22	B7	68Ω	-MB22 DIAG READ FUNC 16X H
R188(1)	MB22	D7	68Ω	MB22 EBUS REG 00 H
R185(1)	MB22	D7	68Ω	MB22 EBUS REG 01 H
R186(1)	MB22	D7	68Ω	MB22 EBUS REG 02 H
R187(1)	MB22	D7	68Ω	MB22 EBUS REG 03 H
P96(1)	MB22	D6	68Ω	MB22 EBUS REG 04 H
R93(1)	MB22	D6	68Ω	MB22 EBUS REG 05 H
R94(1)	MB22	D6	68Ω	MB22 EBUS REG 06 H
R95(1)	MB22	D6	68Ω	MB22 EBUS REG 07 H
R132(1)	MB22	D5	68Ω	MB22 EBUS REG 08 H
R130(1)	MB22	D5	68Ω	MB22 EBUS REG 14 H

RESISTOR LOC(PIN)	SHOWN ON DRW#	REF	VALUE	TERMINATES SIGNAL
R190(1)	MB22	D5	68Ω	MB22 EBUS REG 15 H
R189(1)	MB22	D5	68Ω	MB22 EBUS REG 16 H
R196(1)	MB22	D3	68Ω	MB22 EBUS REG 17 H
R194(1)	MB22	D3	68Ω	MB22 EBUS REG 18 H
R192(1)	MB22	D3	68Ω	MB22 EBUS REG 19 H
R191(1)	MB22	D3	68Ω	MB22 EBUS REG 20 H
R154(1)	MB22	D2	68Ω	MB22 EBUS REG 21 H
R153(1)	MB22	D2	68Ω	MB22 EBUS REG 22 H
R152(1)	MB22	D2	68Ω	MB22 EBUS REG 23 H
R149(1)	MB22	D2	68Ω	MB22 EBUS REG 24 H
R200(1)	MB22	D1	68Ω	MB22 EBUS REG 25 H
R198(1)	MB22	D1	68Ω	MB22 EBUS REG 26 H
R122(1)	MB22	D1	68Ω	MB22 EBUS REG 34 H
R127(1)	MB22	D1	68Ω	MB22 EBUS REG 35 H
R11(1)	MB22	A7	68Ω	-MB22 LOAD EBUS REG A H
R102(1)	MB22	A7	68Ω	-MB22 LOAD EBUS REG B H
R12(1)	MB23	B5	68Ω	-MB23 A CHANGE COMING H
R107(1)	MB23	B6	68Ω	-MB23 CHAN MEM REF H
R53(1)	MB23	C2	68Ω	MB23 ERR HOLD H
R150(1)	MB23	C2	68Ω	-MB23 HOLD ERR H
R51(1)	MB23	C1	68Ω	MB23 HOLD ERR REG H
R144(1)	MB23	D3	68Ω	MB23 MBOX NXM ERR H
R113(1)	MB23	D4	68Ω	MB23 MBOX NXM ERR CLR H
R241(1)	MB23	C3	68Ω	MB23 MEM START C H
R81(1)	MB23	C3	68Ω	-MB23 MEM START C H
R82(1)	MB23	C6	68Ω	MB23 NXM CLR DONE H
R114(1)	MB23	C6	68Ω	-MB23 NXM CLR DONE H
R63(1)	MB23	D6	68Ω	MB23 NXM CLR T0 H
R73(1)	MB23	B5	68Ω	-MB23 NXM CRY A H
R74(1)	MB23	B3	68Ω	-MB23 NXM CRY B H
R148(1)	MB23	C6	68Ω	MB23 NXM FLG H
R55(1)	MB23	C6	68Ω	-MB23 NXM FLG H
R28(1)	MB23	C3	68Ω	MB23 RESET H
R47(1)	MB23	C3	68Ω	-MB23 RESET H
R146(1)	MB23	A2	68Ω	MB23 RQ HOLD DLY H
R140(1)	MB24	C2	68Ω	MB24 ADR PAR ERR FLG H
R76(1)	MB24	A5	68Ω	MB24 CORE BUSY A H
R97(1)	MB24	A5	68Ω	-MB24 CORE BUSY A H
R34(1)	MB24	A5	68Ω	MB24 CORE BUSY IN A H
R183(1)	MB24	C6	68Ω	-MB24 LOAD MB # H

NOTE:

1. ALL TERMINATORS HAVE PIN TWO CONNECTED TO -2.0V AND ARE 5% 1/4WATT UNLESS OTHERWISE SPECIFIED
2. ENTRIES ARE SORTED BY SIGNAL NAME
3. % INDICATES OUTPUT OF DIP LOC AND () INDICATES PIN NUMBER

"THIS DRAWING AND SPECIFICATIONS, HEREIN, ARE THE PROPERTY OF DIGITAL EQUIPMENT COR-ORATION AND SHALL NOT BE REPRODUCED OR COPIED OR USED IN WHOLE OR IN PART AS THE BASIS FOR THE MANUFACTURE OR SALE OF ITEMS WITHOUT WRITTEN PERMISSION. COPYRIGHT © 1976, DIGITAL EQUIPMENT CORPORATION"

REVISIONS

CHK	CHANGE NO.	REV

digital

DRN. G Smith DATE 25-AUG-76 ENG. John Dalle DATE 17 SEPT 76
CHK'D. W Stephenson DATE 9/16/76 BOARD LOCATION: SHEET 1 OF 2
R85371.DRW[4,175] 30-AUG-76 17:33 NEXT HIGHER ASSEMBLY: B-DD-M8537-0
FIRST USED ON OPTION/MODEL: KL10

TITLE: MBOX CONTROL #4 TERMINATORS

SIZE	CODE	NUMBER	REV.
D	CS	M8537-0-RES	C

313

1 MR

RESISTOR LOC(PIN)	SHOWN ON DRW#	REF	VALUE	TERMINATES SIGNAL
R124(1)	MB24	B6	68Ω	MB24 MB DATA SOURCE 1 H
R125(1)	MB24	B6	68Ω	MB24 MB DATA SOURCE 2 H
R61(1)	MB24	D2	68Ω	MB24 MB PAR ERR H
R136(1)	MB24	B6	68Ω	MB24 MB WD SEL 1 H
R137(1)	MB24	B6	68Ω	MB24 MB WD SEL 2 H
R62(1)	MB24	A2	68Ω	MB24 MEM RD RQ A H
R78(1)	MB24	A2	68Ω	-MB24 MEM RD RQ A H
R77(1)	MB24	A2	68Ω	-MB24 MEM WR RQ A H
R151(1)	MB24	D5	68Ω	MB24 NXM T2 H
R44(1)	MB24	D5	68Ω	MB24 NXM T3 H
R43(1)	MB24	C5	68Ω	MB24 NXM T4 H
R42(1)	MB24	C5	68Ω	MB24 NXM T5 H
R4(1)	MB24	B5	68Ω	MB24 NXM T6 H
R145(1)	MB24	B4	68Ω	-MB24 NXM T6,7 H
R8(1)	MB24	D2	68Ω	MB24 SBUS ERR FLG H
R155(1)	MB25	A5	68Ω	MB25 CCW PAR BIT H
R157(1)	MB25	D3	68Ω	MB25 CH BUF 00-17 PAR H
R156(1)	MB25	D2	68Ω	MB25 CH BUF 18-35 PAR H
R169(1)	MB25	C5	68Ω	MB25 CH BUF ADR 0 H
R168(1)	MB25	C5	68Ω	MB25 CH BUF ADR 1 H
R167(1)	MB25	C5	68Ω	MB25 CH BUF ADR 2 H
R172(1)	MB25	C5	68Ω	MB25 CH BUF ADR 3 H
R171(1)	MB25	C5	68Ω	MB25 CH BUF ADR 4 H
R174(1)	MB25	C5	68Ω	MB25 CH BUF ADR 5 H
R166(1)	MB25	B5	68Ω	MB25 CH BUF ADR 6 H
R173(1)	MB25	C7	68Ω	MB25 CH BUF IN 00-17 PAR H
R165(1)	MB25	C7	68Ω	MB25 CH BUF IN 18-35 PAR H
R212(1)	MB25	A7	68Ω	MB25 CH BUF MB SEL H
R158(1)	MB25	A5	68Ω	MB25 CH BUF PAR BIT H
R214(1)	MB25	B7	68Ω	MB25 CH PEG 00-17 PAR H
R216(1)	MB25	B7	68Ω	MB25 CH REG 18-35 PAR H
R205(1)	MB25	B5	68Ω	MB25 CH REG HOLD H
R162(1)	MB25	D2	68Ω	-MB25 LOW H
R176(1)	MB25	D5	68Ω	MB25 MB CH BUF 00-17 PAR H
R177(1)	MB25	D5	68Ω	MB25 MB CH BUF 18-35 PAR H
R128(1)	MB26	C6	68Ω	MB26 CCA REF H
R129(1)	MB26	C6	68Ω	MB26 CHAN REF H
R193(1)	MB26	D6	68Ω	MB26 CSH PAR BIT H
R134(1)	MB26	D3	68Ω	MB26 EBUS REG 00 IN H
R139(1)	MB26	D3	68Ω	MB26 EBUS REG 01 IN H

RESISTOR LOC(PIN)	SHOWN ON DRW#	REF	VALUE	TERMINATES SIGNAL
R142(1)	MB26	D3	68Ω	MB26 EBUS REG 02 IN H
R141(1)	MB26	D3	68Ω	MB26 EBUS REG 03 IN H
P6(1)	MB26	C3	68Ω	MB26 EBUS REG 04 IN H
R7(1)	MB26	C3	68Ω	MB26 EBUS REG 05 IN H
R10(1)	MB26	C3	68Ω	MB26 EBUS REG 06 IN H
R121(1)	MB26	B2	68Ω	MB26 ERA SEL H
R56(1)	MB26	A3	68Ω	-MB26 MB TEST PAR B IN H
R116(1)	MB26	C6	68Ω	MB26 MEM WRITE H
R59(1)	MB24	C3	68Ω	MEM ADR PAR ERR H
R5(1)	MB24	D3	68Ω	MEM ERROR H
R161(1)	MB25	C2	68Ω	MEM PAR IN H
R117(1)	MB24	A2	68Ω	MEM RD RQ B H
R163(1)	MB25	B2	68Ω	-MEM TO C EN H
R164(1)	MB25	B2	68Ω	MEM TO C SEL 1 H
R160(1)	MB25	B2	68Ω	MEM TO C SEL 2 H
R221(1)	MB23	C3	68Ω	MR RESET 06 H
R60(1)	MB21	B3	68Ω	-MTR CCA WRITEBACK H
R217(1)	MB25	C7	68Ω	PAG MB 00-17 PAR H
R213(1)	MB25	C7	68Ω	PAG MB 18-35 PAR H
R184(1)	MB22	D5	68Ω	PAGED REF H
R135(1)	MB26	D3	68Ω	PF HOLD 01 IN H
R138(1)	MB26	D3	68Ω	PF HOLD 02 IN H
R133(1)	MB26	D3	68Ω	PF HOLD 03 IN H
R126(1)	MB26	C3	68Ω	PF HOLD 04 IN H
R123(1)	MB26	C3	68Ω	PF HOLD 05 IN H
R15(1)	MB22	D6	68Ω	PT CACHE H
R115(1)	MB23	C3	68Ω	RQ HOLD FF H

NOTE:

1. ALL TERMINATORS HAVE PIN TWO CONNECTED TO -2.0V AND ARE 5% 1/4WATT UNLESS OTHERWISE SPECIFIED
2. ENTRIES ARE SORTED BY SIGNAL NAME
3. % INDICATES OUTPUT OF DIP LOC AND () INDICATES PIN NUMBER

"THIS DRAWING AND SPECIFICATIONS, HEREIN, ARE THE PROPERTY OF DIGITAL EQUIPMENT CORPORATION AND SHALL NOT BE REPRODUCED OR COPIED OR USED IN WHOLE OR IN PART AS THE BASIS FOR THE MANUFACTURE OR SALE OF ITEMS WITHOUT WRITTEN PERMISSION. COPYRIGHT © 1976, DIGITAL EQUIPMENT CORPORATION"

REVISIONS		
CHK	CHANGE NO.	REV

digital

DRN. C Smith DATE 05-AUG-76 ENG. DATE 17 Sept 76
CHK. DATE 9/15/76 BOARD LOCATION: SHEET 2 OF 2
R85372.DRW[4,175] 30-AUG-76 17:34 NEXT HIGHER ASSEMBLY: B-DD-M8537-0
FIRST USED ON OPTION/MODEL: KL10

TITLE: MBOX CONTROL #4 TERMINATORS

SIZE	CODE	NUMBER	REV.
D	CS	M8537-0-RES	C

314

REVISION CONTROL SHEET

CUSTOMER PRINT SET	MFG SET	DRAWING NO	NO OF SHT	DESCRIPTION	OPTION NO/FILE DATE	REVISIONS (REWORK VERSION)								
				MODULE REVISION		A	B	C	C	C			C	C
		D-UA-M8538-Ø-Ø	6	MTR BOARD		-	A	B	B	B1			B1	B1
		D-CS-M8538-Ø-MTR1	1	METER COUNTERS		-	A	A	A	A1			A1	A1
		D-CS-M8538-Ø-MTR2	1	ACCOUNTING ENABLES AND IMHZ CLOCKS		-	A	B	B	B1			B1	B1
		D-CS-M8538-0-MTR3	1	INTERVAL TIMER		-	A	B	B	B1			B1	B1
		D-CS-M8538-Ø-MTR4	1	PERFORMANCE ANALYSIS		-	A	B	B	B1			B1	B1
		D-CS-M8538-Ø-MTR5	1	EBUS MIXERS AND BUFFERS		-	A	B	B	B1			B1	B1
		D-CS-M8538-Ø-MTR6	1	METERS POWER, GND, CAPS		-	A	B	B	B1			B1	B1
		D-CS-M8538-Ø-RES	2	METERS TERMINATORS		-	A	B	B	B1			B1	B1
		K-CO-M8538-Ø-4	1	MTR BOARD (CALDEC DATA BASE)		A	A	A	A	A			A	A
		D-AH-M8538-Ø-5	4	MTR BOARD		-	-	-	-	-			-	-
		B-MH-M8538-Ø-6	1	MODULE ECO HISTORY		-	A	B	C	D			E	E
		5011440	-	ETCHED CIRCUIT BOARD		A	A	A	A	A			A	A
		P00-M8538-ØØ		PROCESS SHEET (REF ONLY)		-	-	-	-	-			-	-
					ECO NO	ORIG	00001	00002	00002A	00003	00004 CANCELLED PER ECO #4A	0004A CANCELLED ECO #4	00005	0005A

CUSTOMER PRINT SET CODES
X = PRINT OF DOCUMENT INCLUDED IN PRINT SET
C = INCLUDES ALL PRINTS INDICATED ON DOCUMENT
S = CONFIDENTIAL AUTHORIZED SIGNATURE REQUIRED

TITLE		SIZE	CODE	NUMBER	REV
MTR BOARD	SHEET 2 OF 3	B	DD	M8538-Ø	E

315

MR

"THIS DRAWING AND SPECIFICATIONS, HEREIN, ARE THE PROPERTY OF DIGITAL EQUIPMENT CORPORATION AND SHALL NOT BE REPRODUCED OR COPIED OR USED IN WHOLE OR IN PART AS THE BASIS FOR THE MANUFACTURE OR SALE OF ITEMS WITHOUT WRITTEN PERMISSION. COPYRIGHT © 1976 DIGITAL EQUIPMENT CORPORATION"

ECO #2 CONTINUED

COMPONENT ADDS AS SHOWN: (WIRE P/N 9105740-55)

1. E40 (10105) (P/N 19114002) ONLY IF BOARD IS SOLDERED. UA SHEET 4.
2. E304 (68Ω) (P/N 13000219) AND WIRE FROM E38 (9) TO R19.
3. E305 (68Ω) (P/N 13000219) AND WIRE FROM E36 (10) TO R254.
4. R306 (68Ω) (P/N 13000219) AND WIRE FROM E7 (13) TO R180.
5. R307 (68Ω) (P/N 13000219) AND WIRE FROM E59 (11) TO R148.
6. R308 (68Ω) (P/N 13000219) AND WIRE FROM E47 (13) TO R86.

   UA SHEET 3.
7. E59 (10136) (P/N 19115900) ONLY IF BOARD IS SOLDERED. UA SHEET 4.
8. R203 TO PTH'S NEXT TO R204. UA SHEET 3.

WIRE ADDS SIDE 2 AS SHOWN: (P/N (9105740-55) UA SHEET 3.

1. FROM E71 (12) TO R49.
2. FROM E63 (12) TO E64 (10).
3. FROM E64 (10) TO SECOND PTH TO LEFT AND BELOW E57 (8).
4. FROM E40 (13) TO R203.
5. FROM E40 (13) TO R27 (13).
6. FROM PTH TO LEFT OF E36 (1) TO PTH BELOW AND TO LEFT OF E39 (9).
7. FROM E63 (15) TO JUMPER W3.
8. FROM W4 TO E59 (11).
9. FROM E47 (2) TO E38 (9).
10. FROM E7 (12) TO E7 (13).

TWISTED PAIR WIRE ADD SIDE 1 AS SHOWN (9107768-59): UA SHEET 3.

11. A. WHT FROM E82 (13) TO E64 (15).
    B. GRN FROM E82 (16) TO E64 (1).
12. A. WHT FROM E71 (12) TO E40 (12).
    B. GRN FROM E71 (16) TO E40 (16).
13. A. WHT FROM E40 (12) TO E8 (2).
    B. GRN FROM E40 (16) TO E8 (1).
14. A. WHT FROM R300 TO E40 (14).
    B. GRN FROM E14 (1) TO E40 (1).
15. A. WHT FROM E47 (13) TO CC1.
    B. GRN FROM E47 (16) TO LEFT LEAD OF C177.
16. A. WHT FROM E47 (15) TO E64 (9).
    B. GRN FROM E47 (16) TO E64 (16).
17. A. WHT FROM E64 (11) TO PTH ABOVE DA1.
    B. GRN FROM E63 (16) TO LEFT LEAD OF C178.
18. A. WHT FROM E38 (10) TO E64 (14).
    B. GRN FROM E38 (16) TO E59 (1).
19. A. WHT FROM E11 (14) TO E27 (14). DO NOT SOLDER
    B. GRN FROM E11 (16) TO E27 (16).
20. A. WHT FROM E27 (14) TO PTH TO LEFT OF E6 (3)
    B. GRN FROM E27 (1) TO E6 (1).
21. A. WHT FROM E38 (6) TO E36 (10).
    B. GRN FROM E38 (1) TO E36 (16).
22. A. WHT FROM E36 (13) TO E7 (12).
    B. GRN FROM E36 (16) TO E7 (1).
23. A. WHT FROM E7 (15) TO E46 (10).
    B. GRN FROM E7 (16) TO E46 (16)
24. A. WHT FROM E7 (9) TO E43 (7).
    B. GRN FROM E7 (1) TO E43 (1). DO NOT SOLDER.
25. A. WHT FROM E14 (9) TO E43 (12). DO NOT SOLDER.
    B. GRN FROM E14 (16) TO E43 (16).
26. A. WHT FROM E43 (12) TO E59 (15).
    B. GRN FROM E43 (16) TO E59 (16).
27. A. WHT FROM E11 (3) TO E43 (13). DO NOT SOLDER.
    B. GRN FROM E11 (1) TO E43 (1).
28. A. WHT FROM E43 (13) TO E46 (12). DO NOT SOLDER.
    B. GRN FROM E42 (16) TO E46 (16).
29. A. WHT FROM E46 (12) TO E59 (6).
    B. GRN FROM E46 (12) TO E59 (1).
30. A. WHT FROM E41 (4) TO FINGER LEAD OF R299
    B. GRN FROM E41 (1) TO DS1.

REVISIONS		
CHK	CHANGE NO.	REV.

TITLE	SIZE	CODE	NUMBER	REV.
MTR BOARD	D	UA	M8538-0-0	B1
SCALE	SHEET 2 OF 7	DIST.		

316

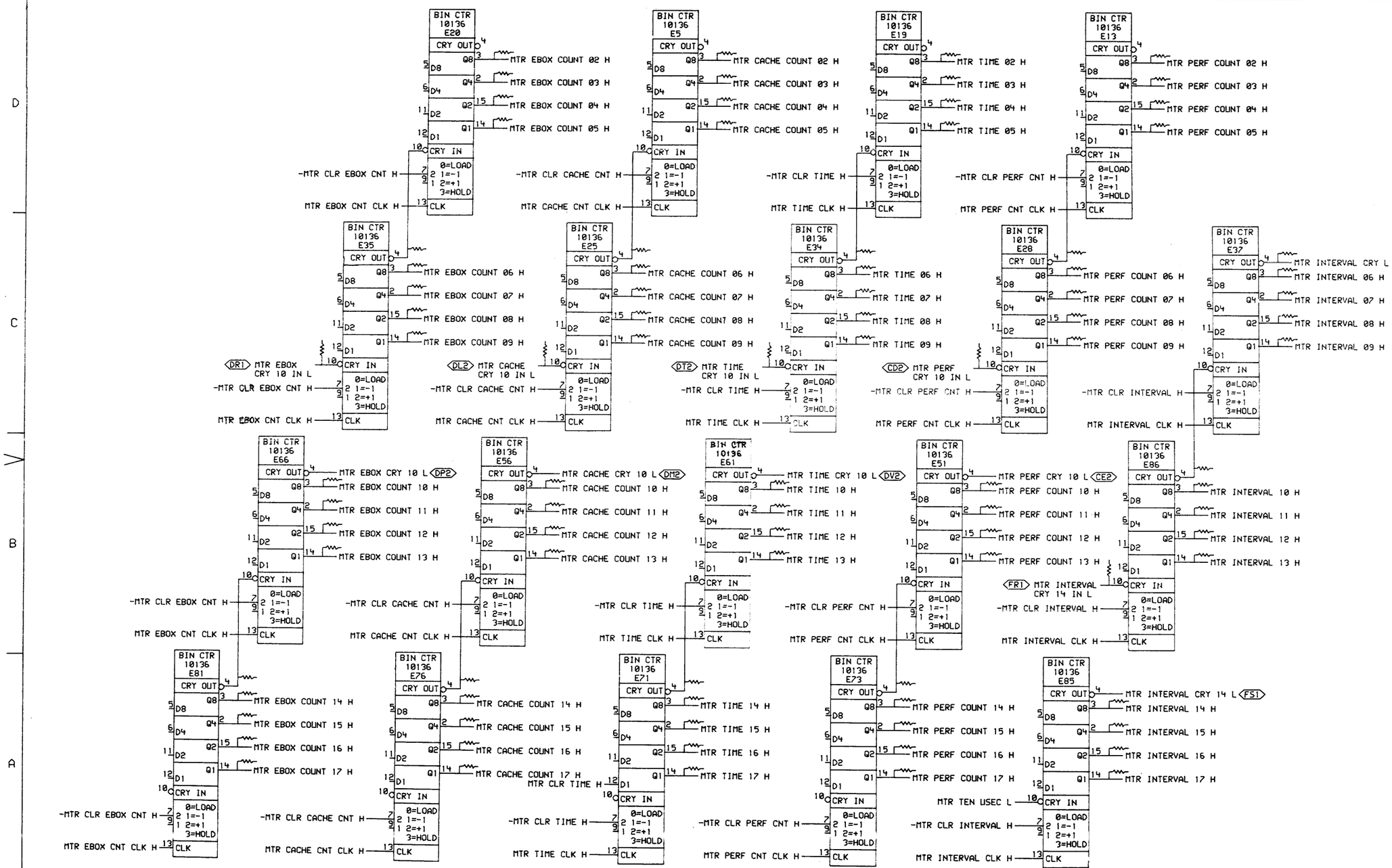

1 OF 6

"THIS DRAWING AND SPECIFICATIONS, HEREIN, ARE THE PROPERTY OF DIGITAL EQUIPMENT CORPORATION AND SHALL NOT BE REPRODUCED OR COPIED OR USED IN WHOLE OR IN PART AS THE BASIS FOR THE MANUFACTURE OR SALE OF ITEMS WITHOUT WRITTEN PERMISSION. COPYRIGHT © 1975, DIGITAL EQUIPMENT CORPORATION"

REVISIONS		
CHK	CHANGE NO.	REV
	M8538-00001	A
	J. LEONARD	
	M8538-00003	A1
	J. LEONARD	

digital

DRN. J. Foody DATE ENG. DATE 5/1/75
CHK. E. Stephenson DATE 4/30/75 BOARD LOCATION: > 4AF33
MTR1EX4,120J 16-APR-75 07:22 SHEET 1 OF 1 NEXT HIGHER ASSEMBLY:
FIRST USED ON OPTION/MODEL: KL10 B-DD-M8538-0

TITLE: METER COUNTERS

SIZE	CODE	NUMBER	REV.
D	CS	M8538-0-MTR1	A1

317

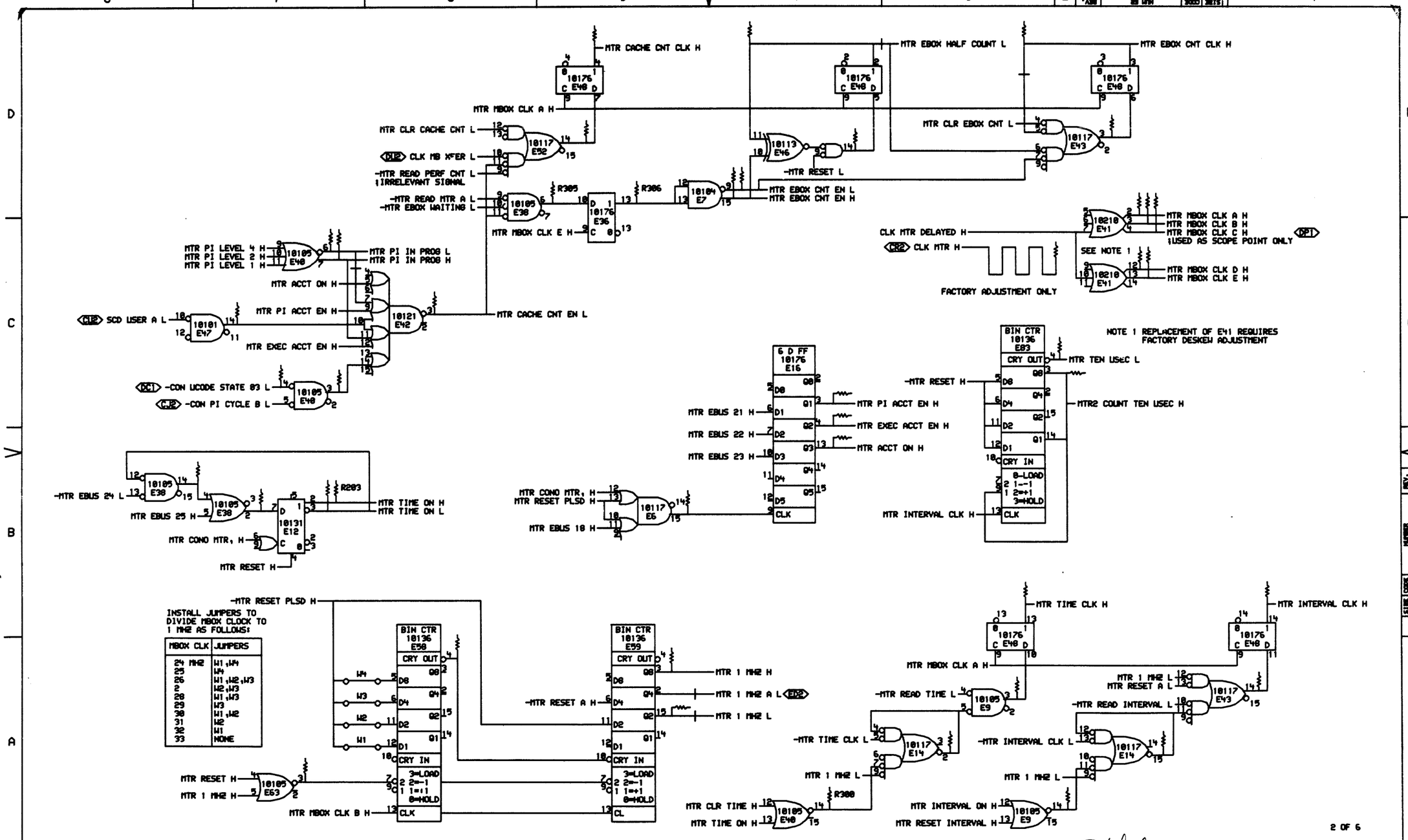

MBOX CLK	JUMPERS
24 MHZ	W1,W4
23	W4
26	W1,W2,W3
2	W2,W3
28	W1,W3
29	W3
30	W1,W2
31	W2
32	W1
33	NONE

"THIS DRAWING AND SPECIFICATIONS, HEREIN, A E THE PROPERTY OF DIGITAL EQUIPMENT CORPORATION A D SHALL NOT BE REPRODUCED OR COPIED OR USED IN WHOLE OR IN PA T A THE BA IS FOR THE M NUFACTURE OR SALE OF ITEMS WITHOUT WRITTEN PERMISSION.
COPYRIGHT © 1975, DIGITAL EQUIPMENT CORPORATION"

REVISIONS		
CHK	CHANGE NO.	REV
-	M8538-00002	B
	J. LEONARD	

M8538-00003 B1

digital

DRN. J. Lonsky 12-Dec-75
CHK'D. 12-Dec-75
ENG. 17-Feb-76
DATE 08-DEC-75
DATE 08-DEC-75 13:43
BOARD LOCATION: 4A 33
SHEET 1 OF 1
NEXT HIGHER A SEMBLY: B-DD-M8538-0
FIRST USED ON OPTION/MODEL: KL10

TITLE: ACCOUNTING ENABLES AND 1 MHZ CLOCKS

SIZE	CODE	NUMBER	REV.
D	CS	M8538-0-MTR2	B1

318

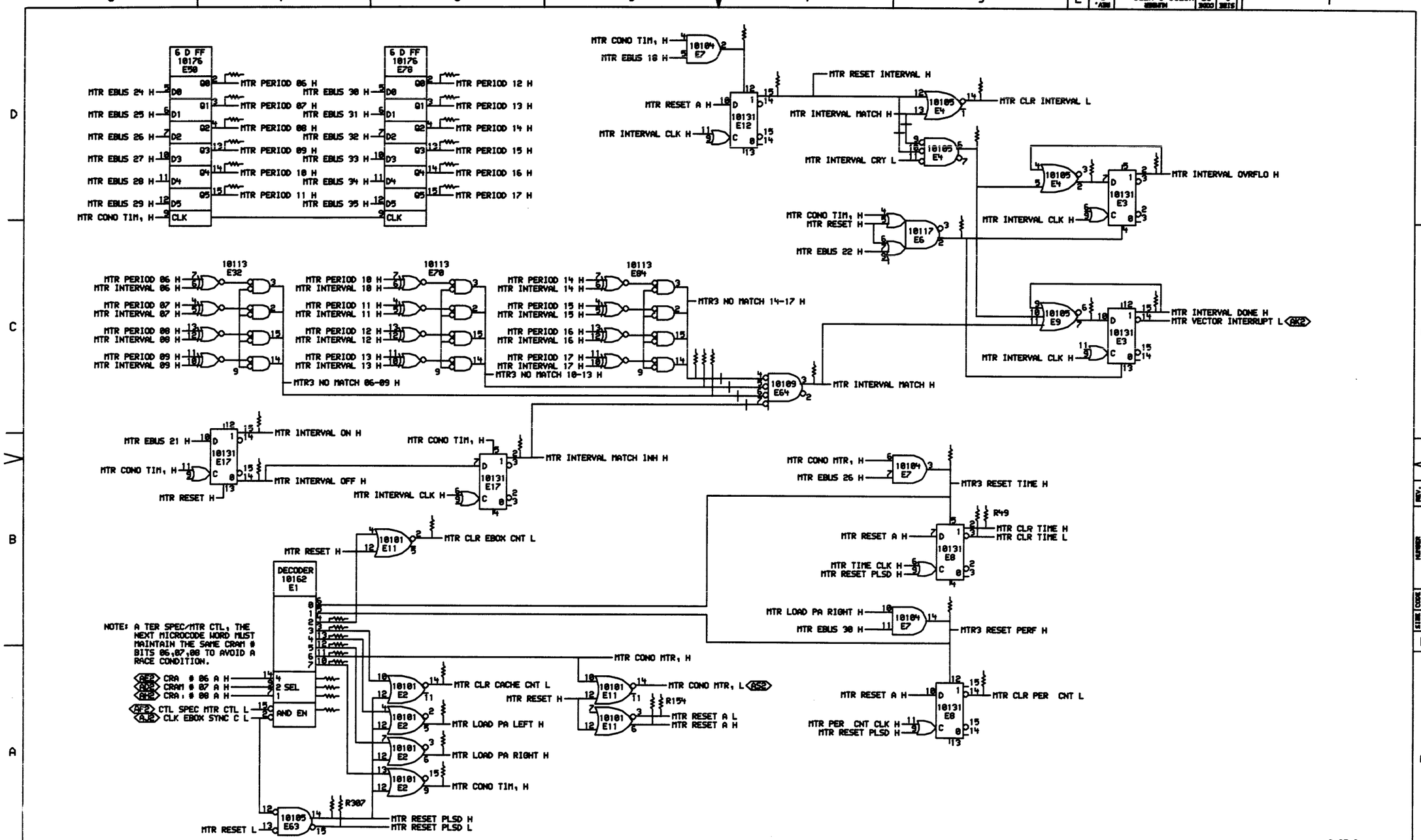

3 OF 6

"THIS DRAWING AND SPECIFICATIONS, HEREIN, ARE THE PROPERTY OF DIGITAL EQUIPMENT CORPORATION AND SHALL NOT BE REPRODUCED OR COPIED OR USED IN WHOLE OR IN PART AS THE BASIS FOR THE MANUFACTURE OR SALE OF ITEMS WITHOUT WRITTEN PERMISSION. COPYRIGHT © 1975, DIGITAL EQUIPMENT CORPORATION"

REVISIONS		
CH C	CHANGE NO.	REV
	M8538-00002	B
	J.LEONARD	
	4-14-76	

M8538-00003	B1	
4/1/77		
J. LEONARD		
11-APR-77		

digital

DR: J. Loosby	DATE 02-DEC-75	ENG.
CHK:	DATE 12/8/75	DATE 17-FEB-76
MTR3DX.DRW;4,1203	08-DEC-75 13:44	BOARD LOCATION:
FIRST USED ON OPTION/MODEL: KL10		NEXT HIGHER ASSEMBLY: B-DD-M8538-0

TITLE: INTERVAL TINTER

SIZE	CODE	NUMBER	REV.
D	CS	M8538-0-MTR3	B1

319

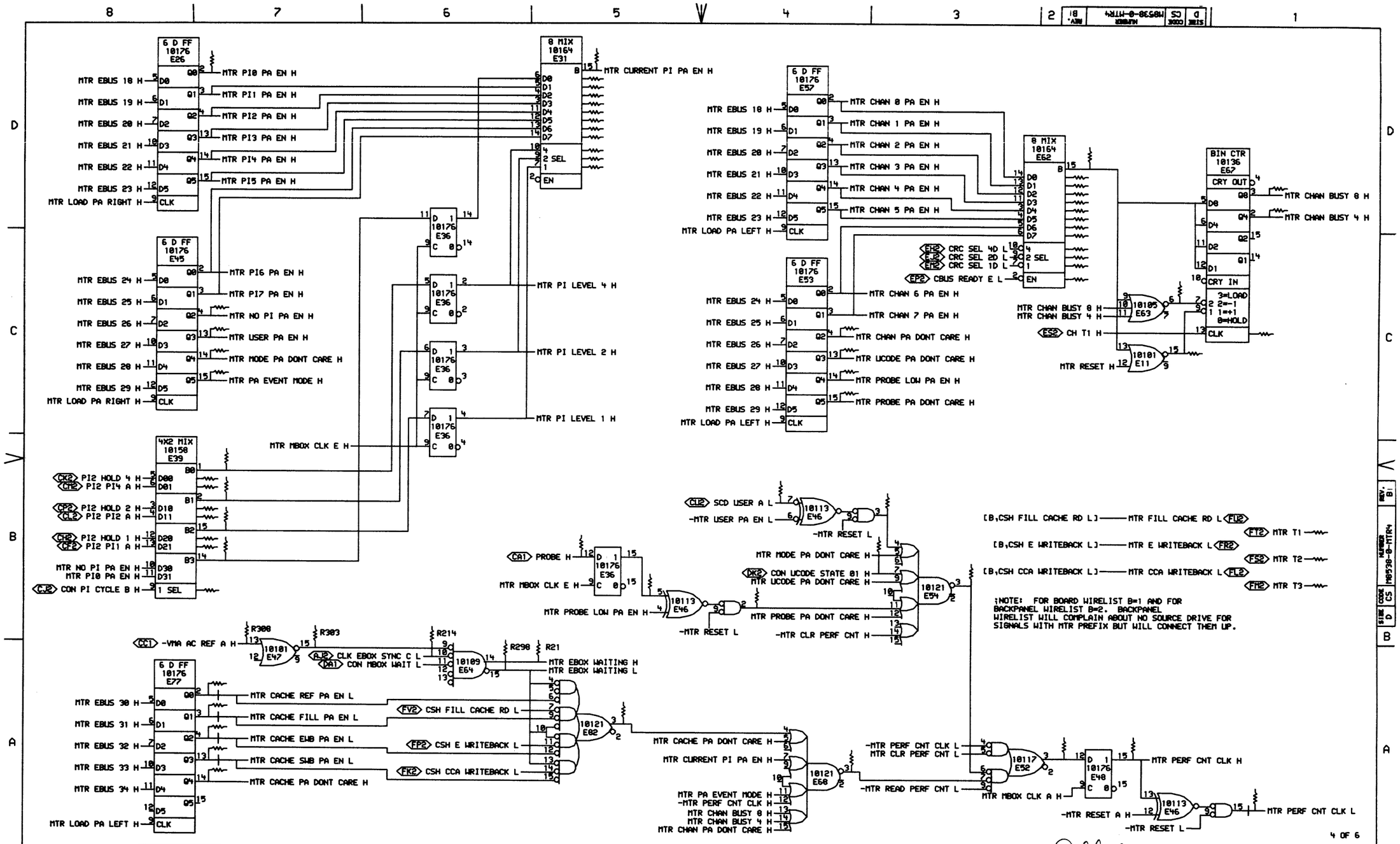

"THIS DRAWING AND SPECIFICATIONS, HEREIN, ARE THE PROPERTY OF DIGITAL EQUIPMENT CORPORATION AND SHALL NOT BE REPRODUCED OR COPIED OR USED IN WHOLE OR IN PART AS THE BASIS FOR THE MANUFACTURE OR SALE OF ITEMS WITHOUT WRITTEN PERMISSION. COPYRIGHT © 1975, DIGITAL EQUIPMENT CORPORATION"

REVISIONS		
CHK	CHANGE NO.	REV
–	M8538-00002	B
	J. LEONARD	

M8538-00003 B1
11-APR-77

digital

DRN. J. Leonard DATE 02-DEC-75
CHK'D DATE 12/8/75
ENG. DATE 7-FEB-76
BOARD LOCATION: 4F33
SHEET 1 OF 1
MTR4EX.DRW[4,120] 02-DEC-75 14:23
FIRST USED ON OPTION/MODEL: KL10
NEXT HIGHER ASSEMBLY: B-DD-M8538-0

TITLE: PERFORMANCE ANALYSIS

SIZE	CODE	NUMBER	REV.
D	CS	M8538-0-MTR4	B1

320

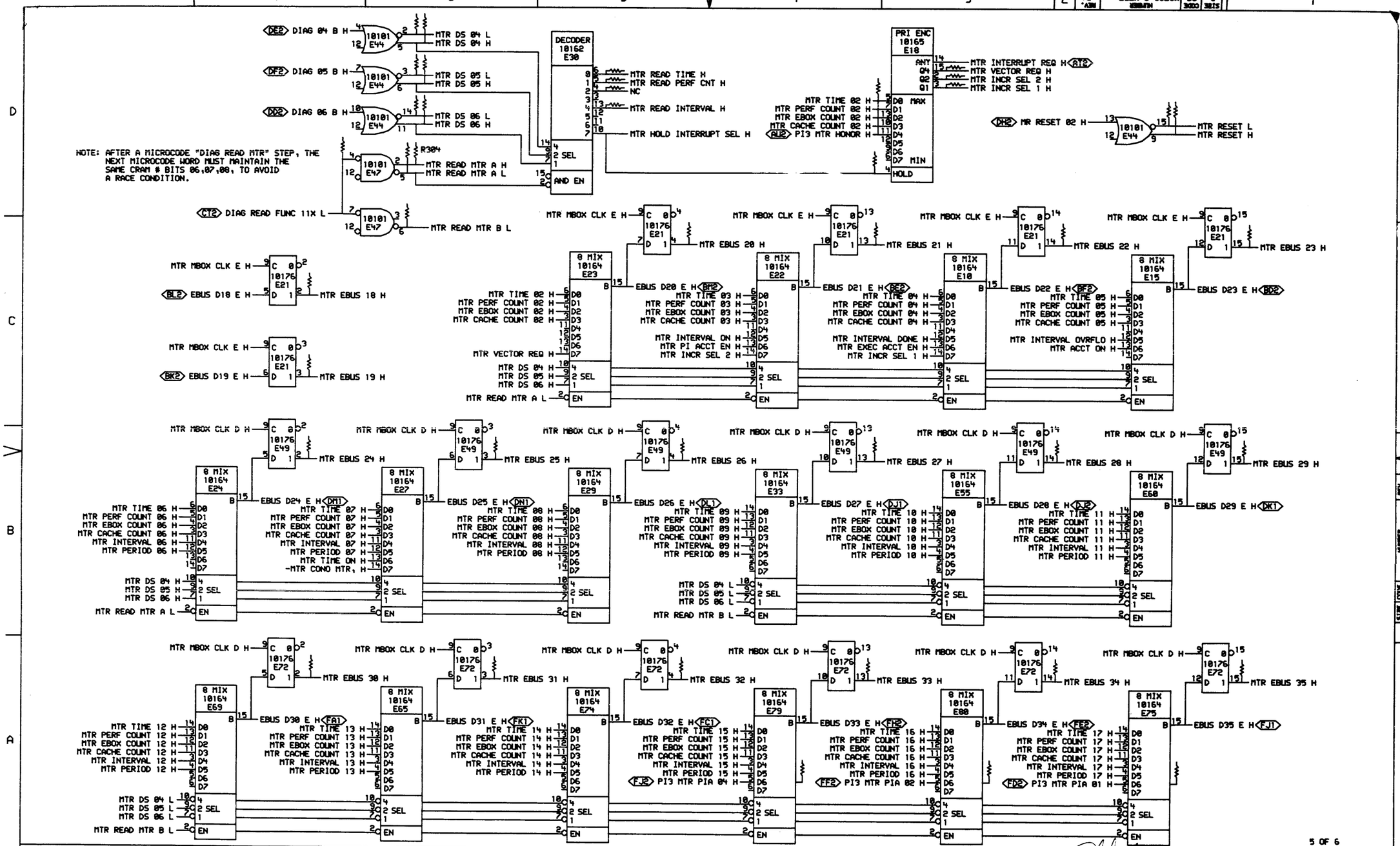

"THIS DRAWING AND SPECIFICATIONS, HEREIN, ARE THE PROPERTY OF DIGITAL EQUIPMENT CORPORATION AND SHALL NOT BE REPRODUCED OR COPIED OR USED IN WHOLE OR IN PART AS THE BASIS FOR THE MANUFACTURE OR SALE OF ITEMS WITHOUT WRITTEN PERMISSION. COPYRIGHT © 1975, DIGITAL EQUIPMENT CORPORATION"

REVISIONS		
CHK	CHANGE NO.	REV
—	M8538-00002	B
J. LEONARD		

M8538-00003 B1

digital

DRN. J. Leonard DATE 02-DEC-75 ENG. DATE 17-FEB-76
CHK. DATE 12-8-76 BOARD LOCATION 4AE33
MTR5EX.DRW(4,120) 02-DEC-75 13:35 SHEET 1 OF 1 NEXT HIGHER ASSEMBLY:
FIRST USED ON OPTION/MODEL: KL10 B-DD-M8538-0

TITLE: EBUS MIXERS AND BUFFERS

SIZE	CODE	NUMBER	REV.
D	CS	M8538-0-MTR5	B1

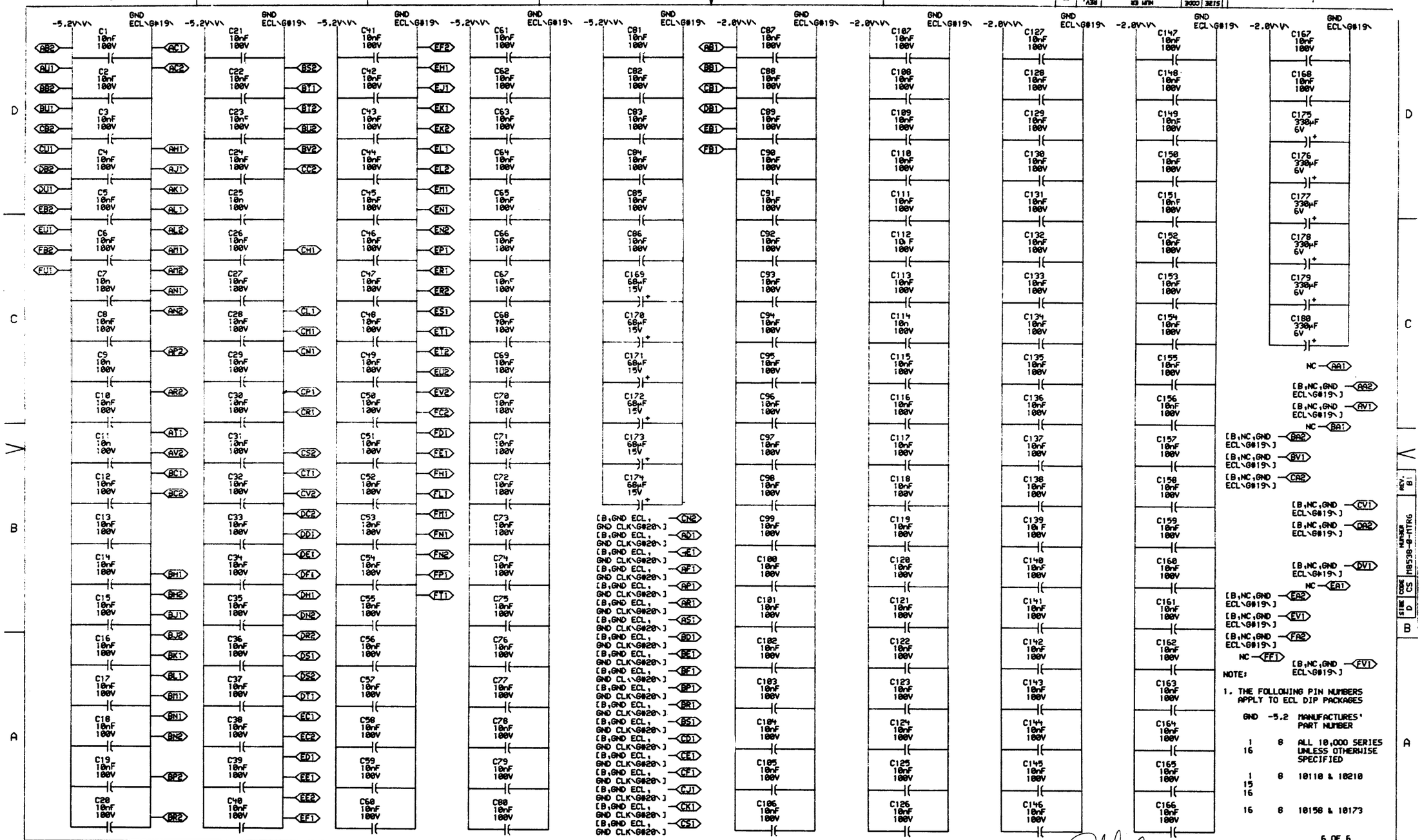

"THIS DRAWING AND SPECIFICATIONS, HEREIN, A E THE PROPERTY OF DIGITAL EQUIPMENT CORPORATION AND SHALL NOT BE REPRODUCED OR COPIED OR USED IN WHOLE OR IN PA T A THE BA IS FOR THE MANUFACTURE OR SALE OF ITEMS WITHOUT WRITTEN PERMISSION.
COPYRIGHT © 1975, DIGITAL EQUIPMENT CORPORATION"

REVISIONS

CHK	CHANGE NO.	REV
—	M8535-00002	B
J.LEONARD		

M8538-00003 B1
J. LEONARD

digital

DRN. J. Loosly DATE 05-DEC-75
CHK'D D. Stephenson DATE 12/8/75
ENG DATE 17-FEB-76
BOM LOCATION: 24AF33
SHEET 1 OF 1
MTRGEX.DRW[4,120] 10-DEC-75 16:53 NEXT HIGHER ASSEMBLY: B-DD-M8538-0
FIRST USED ON OPTION/MODEL: KL10

TITLE: METERS POWER, GND, CAPS

SIZE	CODE	NUMBER	REV.
D	CS	M8538-0-MTR6	B1

322

RESISTOR LOC(PIN)	SHOWN ON DRW#	REF	VALUE	TERMINATES SIGNAL
R100(1)	MTR3EX	A7	68Ω	%E1(10)
R102(1)	MTR3EX	B7	68Ω	%E1(12)
R179(1)	MTR3EX	B7	68Ω	%E1(13)
R101(1)	MTR3EX	B7	68Ω	%E1(3)
R242(1)	MTR3EX	B7	68Ω	%E1(4)
R289(1)	MTR4EX	C2	68Ω	%E11(15)
R26(1)	MTR2EX	A2	68Ω	%E14(15)
R60(1)	MTR2EX	A3	68Ω	%E14(2)
R1(1)	MTR1EX	C5	68Ω	%E25(4)
R124(1)	MTR1EX	C3	68Ω	%E28(4)
R66(1)	MTR1EX	C4	68Ω	%E34(4)
R64(1)	MTR1EX	C6	68Ω	%E35(4)
R306(1)	MTR2EX	D5	68Ω	%E36(13)
R253(1)	MTR4EX	D5	68Ω	%E36(14)
R144(1)	MTR4EX	B5	68Ω	%E36(15)
R24(1)	MTR2EX	B7	68Ω	%E38(14)
R184(1)	MTR2EX	B7	68Ω	%E38(2)
R305(1)	MTR2EX	D5	68Ω	%E38(6)
R258(1)	MTR4EX	B7	68Ω	%E39(1)
R260(1)	MTR4EX	B7	68Ω	%E39(14)
R259(1)	MTR4EX	B7	68Ω	%E39(15)
R257(1)	MTR4EX	B7	68Ω	%E39(2)
R121(1)	MTR3EX	D2	68Ω	%E4(2)
R56(1)	MTR3EX	D3	68Ω	%E4(6)
R300(1)	MTR2EX	A4	68Ω	%E40(14)
R83(1)	MTR2EX	C7	68Ω	%E40(3)
R30(1)	MTR2EX	A1	68Ω	%E43(14)
R36(1)	MTR2EX	D2	68Ω	%E43(3)
R37(1)	MTR2EX	D4	68Ω	%E46(14)
R146(1)	MTR4EX	B4	68Ω	%E46(2)
R148(1)	MTR4EX	B3	68Ω	%E46(3)
R85(1)	MTR2EX	C7	68Ω	%E47(14)
R303(1)	MTR4EX	A7	68Ω	%E47(15)
R35(1)	MTR2EX	D5	68Ω	%E52(14)
R29(1)	MTR4EX	A2	68Ω	%E52(3)
R42(1)	MTR4EX	B3	68Ω	%E54(3)
R151(1)	MTR2EX	A6	68Ω	%E58(4)
R243(1)	MTR2EX	B5	68Ω	%E6(15)
R120(1)	MTR3EX	C3	68Ω	%E6(2)
R237(1)	MTR4EX	D2	68Ω	%E62(15)

RESISTOR LOC(PIN)	SHOWN ON DRW#	REF	VALUE	TERMINATES SIGNAL
R153(1)	MTR2EX	A7	68Ω	%E63(3)
R208(1)	MTR4EX	C2	68Ω	%E63(6)
R41(1)	MTR4EX	A4	68Ω	%E68(3)
R183(1)	MTR3EX	D4	68Ω	%E7(2)
R45(1)	MTR1EX	A5	68Ω	%E71(4)
R87(1)	MTR1EX	A4	68Ω	%E73(4)
R43(1)	MTR1EX	A6	68Ω	%E76(4)
R47(1)	MTR1EX	A7	68Ω	%E81(4)
R220(1)	MTR4EX	A5	68Ω	%E82(3)
R78(1)	MTR1EX	B2	68Ω	%E86(4)
R63(1)	MTR2EX	A2	68Ω	%E9(14)
R34(1)	MTR2EX	A3	68Ω	%E9(3)
R119(1)	MTR3EX	C2	68Ω	%E9(7)
R200(1)	MTR4EX	C2	68Ω	-CBUS READY E H
R207(1)	MTR4EX	C1	68Ω	CH T1 H
R214(1)	MTR4EX	A6	68Ω	-CLK EBOX SYNC C H
R139(1)	MTR2EX	C2	68Ω	CLK MTR H
R208(1)	MTR4EX	B7	68Ω	CON PI CYCLE B H
R150(1)	MTR4EX	B3	68Ω	CON UCODE STATE 01 H
R207(1)	MTR2EX	C7	68Ω	CON UCODE STATE 03 H
R234(1)	MTR3EX	A7	68Ω	CRAM # 06 A H
R236(1)	MTR3EX	A7	68Ω	CRAM # 07 A H
R235(1)	MTR3EX	A7	68Ω	CRAM # 08 A H
R283(1)	MTR4EX	C2	68Ω	-CRC SEL 1D H
R278(1)	MTR4EX	C2	68Ω	-CRC SEL 2D H
R279(1)	MTR4EX	C2	68Ω	-CRC SEL 4D H
R233(1)	MTR3EX	A7	68Ω	-CTL SPEC MTR CTL H
R88(1)	MTR5EX	D7	68Ω	-DIAG READ FUNC 11X H
R215(1)	MTR2EX	A5	68Ω	MTR 1 MH2 H
R62(1)	MTR2EX	A5	68Ω	-MTR 1 MH2 H
R31(1)	MTR2EX	B4	68Ω	MTR ACCT ON H
R2(1)	MTR2EX	D5	68Ω	MTR CACHE CNT CLK H
R39(1)	MTR2EX	C6	68Ω	-MTR CACHE CNT EN H
R129(1)	MTR1EX	D5	68Ω	MTR CACHE COUNT 02 H
R190(1)	MTR1EX	D5	68Ω	MTR CACHE COUNT 03 H
R12(1)	MTR1EX	D5	68Ω	MTR CACHE COUNT 04 H
R16(1)	MTR1EX	D5	68Ω	MTR CACHE COUNT 05 H
R67(1)	MTR1EX	C5	68Ω	MTR CACHE COUNT 06 H
R199(1)	MTR1EX	C5	68Ω	MTR CACHE COUNT 07 H
R75(1)	MTR1EX	C5	68Ω	MTR CACHE COUNT 08 H

RESISTOR LOC(PIN)	SHOWN ON DRW#	REF	VALUE	TERMINATES SIGNAL
R136(1)	MTR1EX	C5	68Ω	MTR CACHE COUNT 09 H
R92(1)	MTR1EX	B6	68Ω	MTR CACHE COUNT 10 H
R96(1)	MTR1EX	B6	68Ω	MTR CACHE COUNT 11 H
R162(1)	MTR1EX	B6	68Ω	MTR CACHE COUNT 12 H
R101(1)	MTR1EX	B6	68Ω	MTR CACHE COUNT 13 H
R167(1)	MTR1EX	A6	68Ω	MTR CACHE COUNT 14 H
R173(1)	MTR1EX	A6	68Ω	MTR CACHE COUNT 15 H
R115(1)	MTR1EX	A6	68Ω	MTR CACHE COUNT 16 H
R109(1)	MTR1EX	A6	68Ω	MTR CACHE COUNT 17 H
R17(1)	MTR1EX	C6	68Ω	-MTR CACHE CRY 10 IN H
R295(1)	MTR4EX	A7	68Ω	-MTR CACHE EWB PA EN H
R290(1)	MTR4EX	A7	68Ω	-MTR CACHE FILL PA EN H
R219(1)	MTR4EX	A7	68Ω	MTR CACHE PA DONT CARE H
R297(1)	MTR4EX	A7	68Ω	-MTR CACHE REF PA EN H
R296(1)	MTR4EX	A7	68Ω	-MTR CACHE SWB PA EN H
R276(1)	MTR4EX	D2	68Ω	MTR CHAN 0 PA EN H
R275(1)	MTR4EX	D2	68Ω	MTR CHAN 1 PA EN H
R274(1)	MTR4EX	D2	68Ω	MTR CHAN 2 PA EN H
R277(1)	MTR4EX	D2	68Ω	MTR CHAN 3 PA EN H
R281(1)	MTR4EX	D2	68Ω	MTR CHAN 4 PA EN H
R285(1)	MTR4EX	D2	68Ω	MTR CHAN 5 PA EN H
R282(1)	MTR4EX	C2	68Ω	MTR CHAN 6 PA EN H
R284(1)	MTR4EX	C2	68Ω	MTR CHAN 7 PA EN H
R217(1)	MTR4EX	D1	68Ω	MTR CHAN BUSY 4 H
R216(1)	MTR4EX	D1	68Ω	MTR CHAN BUSY 8 H
R213(1)	MTR4EX	C4	68Ω	MTR CHAN PA DONT CARE H
R50(1)	MTR3EX	A6	68Ω	-MTR CLR CACHE CNT H
R52(1)	MTR3EX	B6	68Ω	-MTR CLR EBOX CNT H
R55(1)	MTR3EX	D3	68Ω	-MTR CLR INTERVAL H
R226(1)	MTR3EX	A3	68Ω	-MTR CLR PERF CNT H
R49(1)	MTR3EX	B3	68Ω	MTR CLR TIME H
R48(1)	MTR3EX	B3	68Ω	-MTR CLR TIME H
R187(1)	MTR3EX	A7	68Ω	MTR COND MTR, H
R227(1)	MTR3EX	A6	68Ω	MTR COND TIM, H
R221(1)	MTR4EX	D5	68Ω	MTR CURRENT PI PA EN H
R4(1)	MTR5EX	D6	68Ω	MTR DS 04 H
R138(1)	MTR5EX	D6	68Ω	-MTR DS 04 H
R3(1)	MTR5EX	D6	68Ω	MTR DS 05 H
R137(1)	MTR5EX	D6	68Ω	-MTR DS 05 H
R8(1)	MTR5EX	D6	68Ω	MTR DS 06 H

RESISTOR LOC(PIN)	SHOWN ON DRW#	REF	VALUE	TERMINATES SIGNAL
R163(1)	MTR5EX	D6	68Ω	-MTR DS 06 H
R51(1)	MTR2EX	D3	68Ω	MTR EBOX CNT CLK H
R141(1)	MTR2EX	D4	68Ω	MTR EBOX CNT EN H
R27(1)	MTR2EX	D4	68Ω	-MTR EBOX CNT EN H
R130(1)	MTR1EX	D6	68Ω	MTR EBOX COUNT 02 H
R191(1)	MTR1EX	D6	68Ω	MTR EBOX COUNT 03 H
R5(1)	MTR1EX	D6	68Ω	MTR EBOX COUNT 04 H
R15(1)	MTR1EX	D6	68Ω	MTR EBOX COUNT 05 H
R69(1)	MTR1EX	C6	68Ω	MTR EBOX COUNT 06 H
R198(1)	MTR1EX	C6	68Ω	MTR EBOX COUNT 07 H
R74(1)	MTR1EX	C6	68Ω	MTR EBOX COUNT 08 H
R133(1)	MTR1EX	C6	68Ω	MTR EBOX COUNT 09 H
R89(1)	MTR1EX	B7	68Ω	MTR EBOX COUNT 10 H
R93(1)	MTR1EX	B7	68Ω	MTR EBOX COUNT 11 H
R161(1)	MTR1EX	B7	68Ω	MTR EBOX COUNT 12 H
R100(1)	MTR1EX	B7	68Ω	MTR EBOX COUNT 13 H
R166(1)	MTR1EX	A7	68Ω	MTR EBOX COUNT 14 H
R172(1)	MTR1EX	A7	68Ω	MTR EBOX COUNT 15 H
R110(1)	MTR1EX	A7	68Ω	MTR EBOX COUNT 16 H
R108(1)	MTR1EX	A7	68Ω	MTR EBOX COUNT 17 H
R18(1)	MTR1EX	C7	68Ω	-MTR EBOX CRY 10 IN H
R140(1)	MTR2EX	D4	68Ω	-MTR EBOX HALF COUNT H
R21(1)	MTR4EX	A5	68Ω	MTR EBOX WAITING H
R298(1)	MTR4EX	A6	68Ω	-MTR EBOX WAITING H
R270(1)	MTR5EX	C7	68Ω	MTR EBUS 18 H
R269(1)	MTR5EX	C7	68Ω	MTR EBUS 19 H
R271(1)	MTR5EX	C5	68Ω	MTR EBUS 20 H
R273(1)	MTR5EX	C4	68Ω	MTR EBUS 21 H
R272(1)	MTR5EX	C2	68Ω	MTR EBUS 22 H
R268(1)	MTR5EX	C1	68Ω	MTR EBUS 23 H
R20(1)	MTR5EX	B7	68Ω	MTR EBUS 24 H
R25(1)	MTR5EX	B6	68Ω	MTR EBUS 25 H
R185(1)	MTR5EX	B5	68Ω	MTR EBUS 26 H
R211(1)	MTR5EX	B4	68Ω	MTR EBUS 27 H
R209(1)	MTR5EX	B2	68Ω	MTR EBUS 28 H
R206(1)	MTR5EX	B1	68Ω	MTR EBUS 29 H
R186(1)	MTR5EX	A7	68Ω	MTR EBUS 30 H
R230(1)	MTR5EX	A6	68Ω	MTR EBUS 31 H
R231(1)	MTR5EX	A5	68Ω	MTR EBUS 32 H
R228(1)	MTR5EX	A4	68Ω	MTR EBUS 33 H

NOTE:

1. ALL TERMINATORS HAVE PIN TWO CONNECTED TO -2.0V AND ARE 5% 1/4WATT UNLESS OTHERWISE SPECIFIED
2. ENTRIES ARE SORTED BY SIGNAL NAME
3. % INDICATES OUTPUT OF DIP LOC AND () INDICATES PIN NUMBER

"THIS DRAWING AND SPECIFICATIONS, HEREIN, ARE THE PROPERTY OF DIGITAL EQUIPMENT CORPORATION AND SHALL NOT BE REPRODUCED OR COPIED OR USED IN WHOLE OR IN PART AS THE BASIS FOR THE MANUFACTURE OR SALE OF ITEMS WITHOUT WRITTEN PERMISSION.
"COPYRIGHT © 1975, DIGITAL EQUIPMENT CORPORATION"

REVISIONS		
CHK	CHANGE NO.	REV
	M8538-00002	B1
	J. LEONARD	

DRN. C Smith DATE 08-DEC-75 ENG. DATE 17-FEB-76
CHK'D. DATE BOARD LOCATION: SHEET 1 OF 2
M8538.DRAW(4,427) 08-DEC-75 11:47 NEXT HIGHER ASSEMBLY: B-DD-M8538-0
FIRST USED ON OPTION/MODEL: KL10

TITLE: METERS TERMINATORS

SIZE	CODE	NUMBER	REV.
D	CS	M8538-0-RES	B1

RESISTOR LOC(PIN)	SHOWN ON DRW#	REF	VALUE	TERMINATES SIGNAL
R224(1)	MTR5	A2	68Ω	MTR EBUS 34 H
R223(1)	MTR5	A1	68Ω	MTR EBUS 35 H
R81(1)	MTR2	B6	68Ω	MTR EXEC ACCT EN H
R125(1)	MTR5	D4	68Ω	MTR HOLD INTERRUPT SEL H
R6(1)	MTR5	D3	68Ω	MTR INCR SEL 1 H
R188(1)	MTR5	D3	68Ω	MTR INCR SEL 2 H
R202(1)	MTR1	C2	68Ω	MTR INTERVAL 06 H
R194(1)	MTR1	C2	68Ω	MTR INTERVAL 07 H
R201(1)	MTR1	C2	68Ω	MTR INTERVAL 08 H
R200(1)	MTR1	C2	68Ω	MTR INTERVAL 09 H
R44(1)	MTR1	B2	68Ω	MTR INTERVAL 10 H
R46(1)	MTR1	B2	68Ω	MTR INTERVAL 11 H
R158(1)	MTR1	B2	68Ω	MTR INTERVAL 12 H
R97(1)	MTR1	B2	68Ω	MTR INTERVAL 13 H
R170(1)	MTR1	A2	68Ω	MTR INTERVAL 14 H
R174(1)	MTR1	A2	68Ω	MTR INTERVAL 15 H
R176(1)	MTR1	A2	68Ω	MTR INTERVAL 16 H
R177(1)	MTR1	A2	68Ω	MTR INTERVAL 17 H
R54(1)	MTR2	B1	68Ω	MTR INTERVAL CLK H
R59(1)	MTR1	C2	68Ω	-MTR INTERVAL CRY H
P53(1)	MTR1	B2	68Ω	-MTR INTERVAL CRY 14 IN H
R7(1)	MTR3	C2	68Ω	MTR INTERVAL DONE H
R58(1)	MTR3	C4	68Ω	MTR INTERVAL MATCH H
R157(1)	MTR3	B6	68Ω	MTR INTERVAL MATCH INH H
R189(1)	MTR3	B7	68Ω	MTR INTERVAL OFF H
R301(1)	MTR3	C7	68Ω	MTR INTERVAL ON H
R11(1)	MTR3	D2	68Ω	MTR INTERVAL OVRFLO H
R291(1)	MTR3	A6	68Ω	MTR LOAD PA LEFT H
R210(1)	MTR3	A6	68Ω	MTR LOAD PA RIGHT H
R?3(1)	MTR2	C2	68Ω	MTR MBOX CLK A H
R212(1)	MTR2	C2	68Ω	MTR MBOX CLK B H
R299(1)	MTR2	C2	68Ω	MTR MBOX CLK C H
R206(1)	MTR2	C2	68Ω	MTR MBOX CLK D H
R244(1)	MTR2	C2	68Ω	MTR MBOX CLK E H
R149(1)	MTR4	C7	68Ω	MTR MODE PA DONT CARE H
R262(1)	MTR4	C7	68Ω	MTR NO P1 PA EN H
R218(1)	MTR4	C7	68Ω	MTR PA EVENT MODE H
R225(1)	MTR4	A2	68Ω	MTR PERF CNT CLK H
R222(1)	MTR4	A1	68Ω	-MTR PERF CNT CLK H
R131(1)	MTR1	D2	68Ω	MTR PERF COUNT 02 H

RESISTOR LOC(PIN)	SHOWN ON DRW#	REF	VALUE	TERMINATES SIGNAL
R193(1)	MTR1	D2	68Ω	MTR PERF COUNT 03 H
R10(1)	MTR1	D2	68Ω	MTR PERF COUNT 04 H
R14(1)	MTR1	D2	68Ω	MTR PERF COUNT 05 H
R70(1)	MTR1	C3	68Ω	MTR PERF COUNT 06 H
R197(1)	MTR1	C3	68Ω	MTR PERF COUNT 07 H
R73(1)	MTR1	C3	68Ω	MTR PERF COUNT 08 H
R134(1)	MTR1	C3	68Ω	MTR PERF COUNT 09 H
R91(1)	MTR1	B3	68Ω	MTR PERF COUNT 10 H
R95(1)	MTR1	B3	68Ω	MTR PERF COUNT 11 H
R159(1)	MTR1	B3	68Ω	MTR PERF COUNT 12 H
R98(1)	MTR1	B3	68Ω	MTR PERF COUNT 13 H
R164(1)	MTR1	A4	68Ω	MTR PERF COUNT 14 H
R171(1)	MTR1	A4	68Ω	MTR PERF COUNT 15 H
R114(1)	MTR1	A4	68Ω	MTR PERF COUNT 16 H
R106(1)	MTR1	A4	68Ω	MTR PERF COUNT 17 H
R132(1)	MTR1	C3	68Ω	-MTR PERF CRY 10 IN H
R68(1)	MTR3	D7	68Ω	MTR PERIOD 06 H
R195(1)	MTR3	D7	68Ω	MTR PERIOD 07 H
R72(1)	MTR3	D7	68Ω	MTR PERIOD 08 H
R80(1)	MTR3	D7	68Ω	MTR PERIOD 09 H
P105(1)	MTR3	D7	68Ω	MTR PERIOD 10 H
R104(1)	MTR3	D7	68Ω	MTR PERIOD 11 H
R103(1)	MTR3	D6	68Ω	MTR PERIOD 12 H
R102(1)	MTR3	D6	68Ω	MTR PERIOD 13 H
R169(1)	MTR3	D6	68Ω	MTR PERIOD 14 H
R170(1)	MTR3	D6	68Ω	MTR PERIOD 15 H
R116(1)	MTR3	D6	68Ω	MTR PERIOD 16 H
R111(1)	MTR3	D6	68Ω	MTR PERIOD 17 H
R84(1)	MTR2	B6	68Ω	MTR P1 ACCT EN H
R82(1)	MTR2	C7	68Ω	MTR P1 IN PROG H
R32(1)	MTR2	C7	68Ω	-MTR P1 IN PROG H
R205(1)	MTR4	D5	68Ω	MTR P1 LEVEL 1 H
R204(1)	MTR4	D5	68Ω	MTR P1 LEVEL 2 H
R247(1)	MTR4	D5	68Ω	MTR P1 LEVEL 4 H
R256(1)	MTR4	D7	68Ω	MTR P10 PA EN H
R254(1)	MTR4	D5	68Ω	MTR P11 PA EN H
R252(1)	MTR4	D5	68Ω	MTR P12 PA EN H
R251(1)	MTR4	D5	68Ω	MTR P13 PA EN H
R245(1)	MTR4	D5	68Ω	MTR P14 PA EN H
R248(1)	MTR4	D5	68Ω	MTR P15 PA EN H

RESISTOR LOC(PIN)	SHOWN ON DRW#	REF	VALUE	TERMINATES SIGNAL
R249(1)	MTR4	D5	68Ω	MTR P16 PA EN H
R250(1)	MTR4	D5	68Ω	MTR P17 PA EN H
R143(1)	MTR4	C4	68Ω	MTR PROBE LOW PA EN H
R145(1)	MTR4	C4	68Ω	MTR PROBE PA DONT CARE H
R28(1)	MTR5	D5	68Ω	MTR READ INTERVAL H
R304(1)	MTR5	D6	68Ω	MTR READ MTR A H
R13(1)	MTR5	D6	68Ω	-MTR READ MTR A H
R79(1)	MTR5	C6	68Ω	-MTR READ MTR B H
R38(1)	MTR5	D5	68Ω	MTR READ PERF CNT H
R61(1)	MTR5	D5	68Ω	MTR READ TIME H
R240(1)	MTR5	D2	68Ω	MTR RESET H
R229(1)	MTR5	D2	68Ω	-MTR RESET H
R122(1)	MTR3	A5	68Ω	MTR RESET A H
R154(1)	MTR3	A5	68Ω	-MTR RESET A H
R57(1)	MTR3	D4	68Ω	MTR RESET INTERVAL H
R241(1)	MTR3	A7	68Ω	MTR RESET PLSD H
R307(1)	MTR3	A7	68Ω	-MTR RESET PLSD H
R294(1)	MTR4	B1	68Ω	MTR T1
R293(1)	MTR4	B1	68Ω	MTR T2
R292(1)	MTR4	B1	68Ω	MTR T3
R118(1)	MTR2	C3	68Ω	-MTR TEN USEC H
R128(1)	MTR1	D3	68Ω	MTR TIME 02 H
R192(1)	MTR1	D3	68Ω	MTR TIME 03 H
R9(1)	MTR1	D3	68Ω	MTR TIME 04 H
R65(1)	MTR1	D3	68Ω	MTR TIME 05 H
R71(1)	MTR1	C4	68Ω	MTR TIME 06 H
R246(1)	MTR1	C4	68Ω	MTR TIME 07 H
R76(1)	MTR1	C4	68Ω	MTR TIME 08 H
R135(1)	MTR1	C4	68Ω	MTR TIME 09 H
R90(1)	MTR1	B4	68Ω	MTR TIME 10 H
R94(1)	MTR1	B4	68Ω	MTR TIME 11 H
R160(1)	MTR1	B4	68Ω	MTR TIME 12 H
R99(1)	MTR1	B4	68Ω	MTR TIME 13 H
R165(1)	MTR1	A5	68Ω	MTR TIME 14 H
R168(1)	MTR1	A5	68Ω	MTR TIME 15 H
R113(1)	MTR1	A5	68Ω	MTR TIME 16 H
R107(1)	MTR1	A5	68Ω	MTR TIME 17 H
R123(1)	MTR2	B3	68Ω	MTR TIME CLK H
R77(1)	MTR1	C4	68Ω	-MTR TIME CRY 10 IN H
R203(1)	MTR2	C4	68Ω	MTR TIME ON H

RESISTOR LOC(PIN)	SHOWN ON DRW#	REF	VALUE	TERMINATES SIGNAL
R19(1)	MTR2	C4	68Ω	-MTR TIME ON H
R147(1)	MTR4	C4	68Ω	MTR UCODE PA DONT CARE H
R142(1)	MTR4	C7	68Ω	MTR USER PA EN H
R127(1)	MTR5	D3	68Ω	MTR VECTOR REQ H
R232(1)	MTR2	C3	68Ω	MTR2 COUNT TEN USEC H
R156(1)	MTR3	C4	68Ω	MTR3 NO MATCH 06-09 H
R155(1)	MTR3	C5	68Ω	MTR3 NO MATCH 10-13 H
R152(1)	MTR3	C5	68Ω	MTR3 NO MATCH 14-17 H
R239(1)	MTR3	B3	68Ω	MTR3 RESET PERF H
R238(1)	MTR3	B3	68Ω	MTR3 RESET TIME H
R22(1)	MTR5	D5	68Ω	NC
R255(1)	MTR4	B7	68Ω	PI2 HOLD 1 H
R263(1)	MTR4	B7	68Ω	PI2 HOLD 2 H
R267(1)	MTR4	B7	68Ω	PI2 HOLD 4 H
R265(1)	MTR4	B7	68Ω	PI2 PI1 A H
R264(1)	MTR4	B7	68Ω	PI2 PI2 A H
R266(1)	MTR4	B7	68Ω	PI2 PI4 A H
R126(1)	MTR5	D3	68Ω	PI3 MTR HONOR H
R112(1)	MTR5	A2	68Ω	PI3 MTR PIA 01 H
R117(1)	MTR5	A3	68Ω	PI3 MTR PIA 02 H
R175(1)	MTR5	A4	68Ω	PI3 MTR PIA 04 H
R261(1)	MTR4	B5	68Ω	PROBE H
R86(1)	MTR4	B4	68Ω	-SCD USER A H
R308(1)	MTR4	B7	68Ω	-VMA AC REF A H

NOTE:

1. ALL TERMINATORS HAVE PIN TWO CONNECTED TO -2.0V AND ARE 5% 1/4WATT UNLESS OTHERWISE SPECIFIED
2. ENTRIES ARE SORTED BY SIGNAL NAME
3. % INDICATES OUTPUT OF DIP LOC AND ( ) INDICATES PIN NUMBER

"THIS DRAWING AND SPECIFICATIONS, HEREIN, ARE THE PROPERTY OF DIGITAL EQUIPMENT CORPORATION AND SHALL NOT BE REPRODUCED OR COPIED OR USED IN WHOLE OR IN PART AS THE BASIS FOR THE MANUFACTURE OR SALE OF ITEMS WITHOUT WRITTEN PERMISSION.
COPYRIGHT © 1976 DIGITAL EQUIPMENT CORPORATION"

REVISIONS

CHK	CHANGE NO.	REV
	M8538-00003	B1
	J. LEONARD	

DRN. C Smith DATE 17-FEB-76 ENG DATE 17-FEB-76
CHK'D. DATE BOARD LOCATION:
SHEET 2 OF 2
M8538.DRW[4,427] 17-FEB-76 13:37 NEXT HIGHER ASSEMBLY:
FIRST USED ON OPTION/MODEL: KL10 B-DD-M8538-0

TITLE: METERS TERMINATORS

SIZE	CODE	NUMBER	REV.
D	CS	M8538-0-RES	B1

32.4

REVISION CONTROL SHEET

CUSTOMER PRINT SET	MFG SET	DRAWING NO	NO OF SHT	DESCRIPTION	OPTION NO/FILE DATE	REVISIONS (RELAYOUT VERSION)					
				MODULE REVISION		D			D	D	D
		D-UA-M8538-Ø-Ø	5	MTR BOARD		C			C	C	D
		D-CS-M8538-Ø-MTR1	1	METER COUNTERS		B			B	B	B
		D-CS-M8538-Ø-MTR2	1	ACCOUNTING ENABLES AND IMHZ CLOCKS		C			D	D	D
		D-CS-M8538-0-MTR3	1	INTERVAL TIMER		C			C	C	C
		D-CS-M8538-Ø-MTR4	1	PERFORMANCE ANALYSIS		C			D	D	D
		D-CS-M8538-Ø-MTR5	1	EBUS MIXERS AND BUFFERS		C			C	C	C
		D-CS-M8538-Ø-MTR6	1	METERS POWER, GND, CAPS		C			C	C	C
		D-CS-M8538-Ø-RES	2	METERS TERMINATORS		C			C	C	C
		K-CO-M8538-Ø-4	1	MTR BOARD (CALDEC DATA BASE)		B			B	B	C
		D-AH-M8538-Ø-5	4	MTR BOARD		A			A	A	B
		B-MH-M8538-Ø-6	1	MODULE ECO HISTORY		D			E	E	F
		5011440	-	ETCHED CIRCUIT BOARD		B			B	B	C
		P00-M8538-ØØ		PROCESS SHEET (REF ONLY)		-			-	-	-
					ECO NO	00003	CANCELLED PER ECO #4A	CANCELLED ECO #4	0004A	0005	005A	MR006

CUSTOMER PRINT SET CODES
X = PRINT OF DOCUMENT INCLUDED IN PRINT SET
C = INCLUDES ALL PRINTS INDICATED ON DOCUMENT
S = CONFIDENTIAL AUTHORIZED SIGNATURE REQUIRED

TITLE	SHEET	SIZE	CODE	NUMBER	REV
MTR BOARD	SHEET 3 OF 3	B	DD	M8538-Ø	E

325

MR

THIS DRAWING AND SPECIFICATIONS, DESIGN, AND THE PROPERTY OF DIGITAL EQUIPMENT CORPORATION AND SHALL NOT BE REPRODUCED OR COPIED OR USED IN WHOLE OR IN PART AS THE BASIS FOR THE MANUFACTURE OR SALE OF ITEMS WITHOUT WRITTEN PERMISSION.
COPYRIGHT © 1977 DIGITAL EQUIPMENT CORPORATION

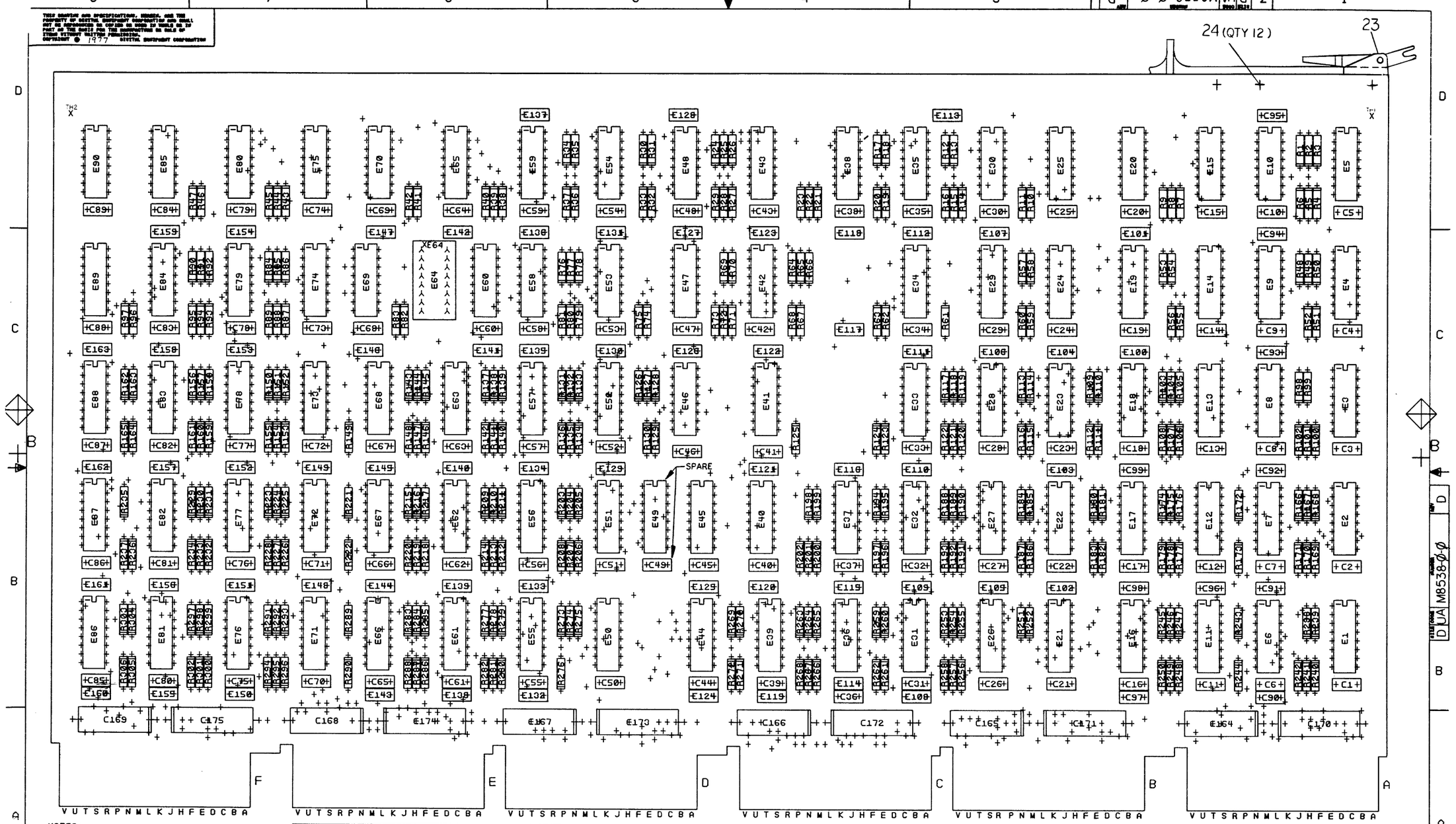

NOTES:

REV	
CHANGE NO	
CHK	

SIGNATURES	DATE
DRN. K.GAMACHE	27JAN77
CHK'D. P. KAMPAS	8FEB77
ENG. P. KAMPAS	8FEB77
PROJ. ENG. T. EGGERS	8FEB77
PROD. W. EMBY	16MAR77
SCALE 2/1	
SHT. 2 OF 5	
NEXT HIGHER ASSY. B-DD-M8538-Ø	

digital

TITLE MTR BOARD

SIZE	CODE	NUMBER	REV
D	UA	M8538-Ø-Ø	D

ETCH REV C

MR 1 MS#30384C

326

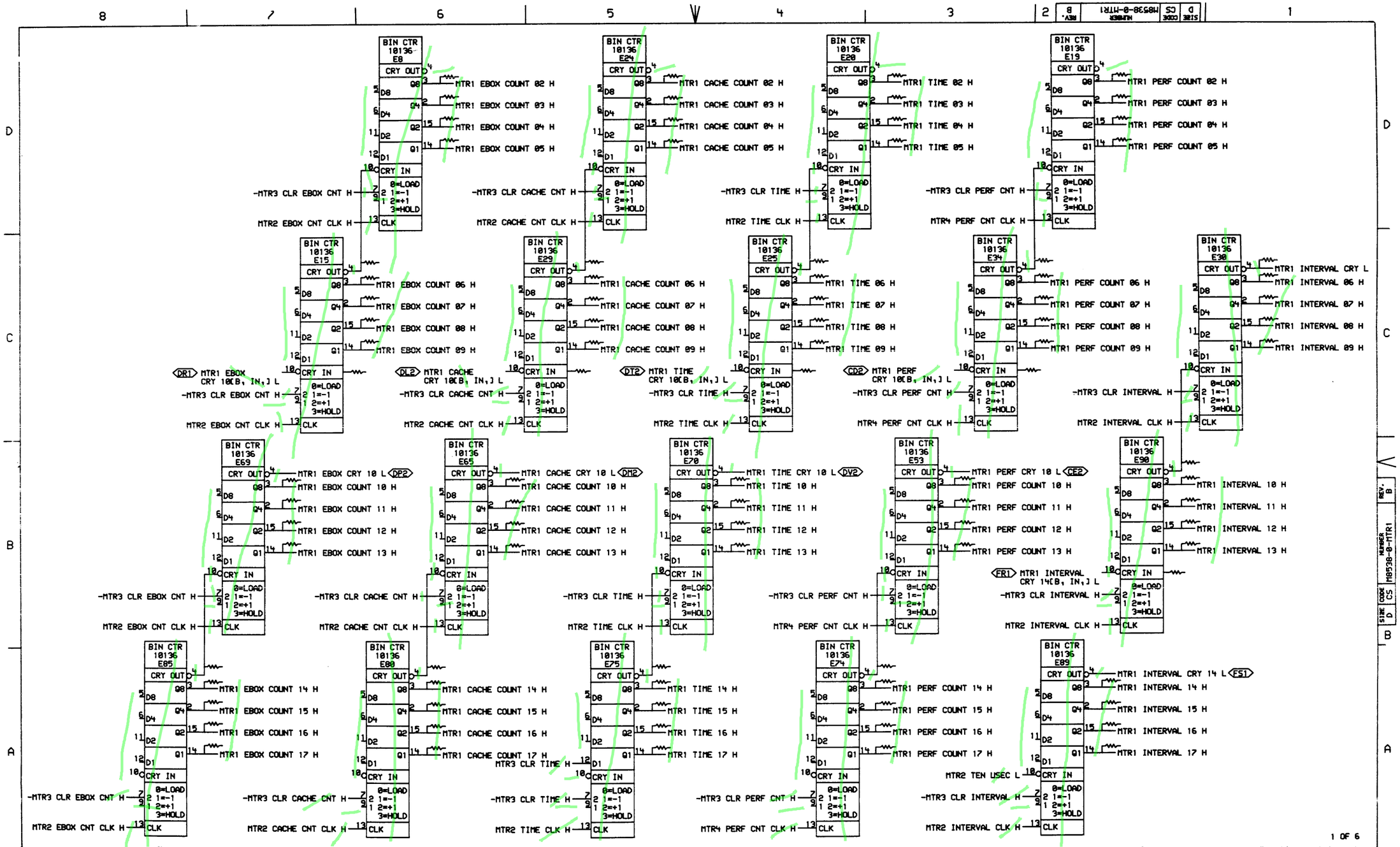

"THIS DRAWING AND SPECIFICATIONS, HEREIN, ARE THE PROPERTY OF DIGITAL EQUIPMENT CORPORATION AND SHALL NOT BE REPRODUCED OR COPIED OR USED IN WHOLE OR IN PART AS THE BASIS FOR THE MANUFACTURE OR SALE OF ITEMS WITHOUT WRITTEN PERMISSION. COPYRIGHT © 1977, DIGITAL EQUIPMENT CORPORATION"

REVISIONS		
CHK	CHANGE NO.	REV
	M8538-00003	B
	PRELIMINARY	

digital

DRN. J. Toomey DATE 03-FEB-77 ENG. P. Kenyon DATE 7 FEB 77
CHKD. DATE 2/8/77 BOARD LOCATION: 4AF33
SHEET 1 OF 1
MTRTER.RVBC4,5753 09-JAN-77 12:39 NEXT HIGHER ASSEMBLY: B-DD-M8538-0
FIRST USED ON OPTION/MODEL: KL10

TITLE: METER COUNTERS

SIZE	CODE	NUMBER	REV.
D	CS	M8538-0-MTR1	B

327

1 1/R

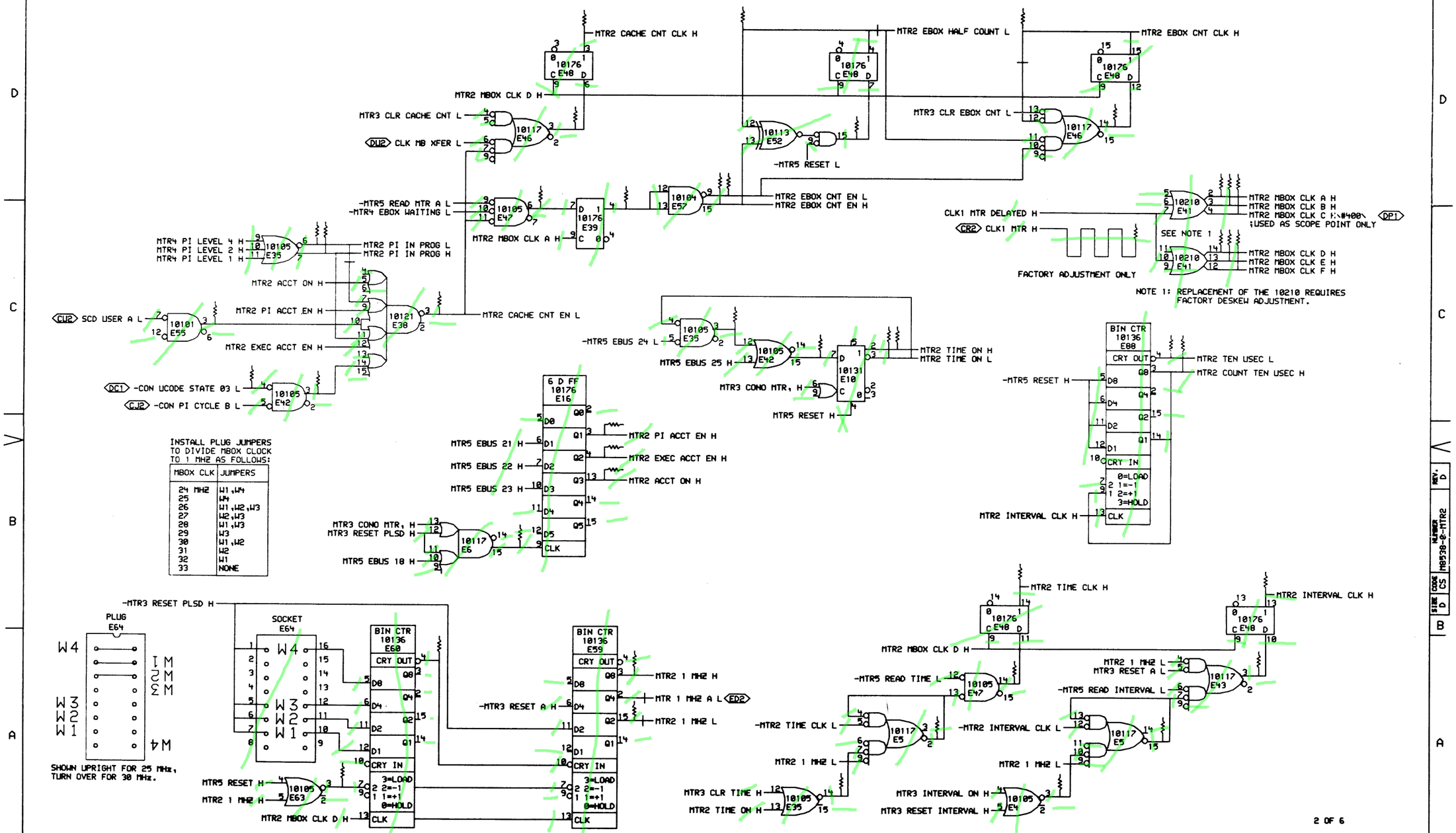

"THIS DRAWING AND SPECIFICATIONS, HEREIN, ARE THE PROPERTY OF DIGITAL EQUIPMENT CORPORATION AND SHALL NOT BE REPRODUCED OR COPIED OR USED IN WHOLE OR IN PART AS THE BASIS FOR THE MANUFACTURE OR SALE OF ITEMS WITHOUT WRITTEN PERMISSION. COPYRIGHT © 1977, DIGITAL EQUIPMENT CORPORATION"

REVISIONS		
CHK	CHANGE NO.	REV
—	M8538-00005	D

J. EGGERS

digital

DWN: J. Loomby — DATE 06-APR-77
CHK: — DATE
MTR2ER.DWG(4,253) 06-APR-77 10:10
FIRST USED ON OPTION/MODEL: KL10

ENG: — DATE 11-APR-77
BOARD LOCATION: 4A33
SHEET 1 OF 1
NEXT HIGHER ASSEMBLY: B-DD-M8538-0

TITLE: ACC'T ENABLES & 1 MHZ CLOCKS

SIZE	CODE	NUMBER	REV.
D	CS	M8538-0-MTR2	D

1 MR

328

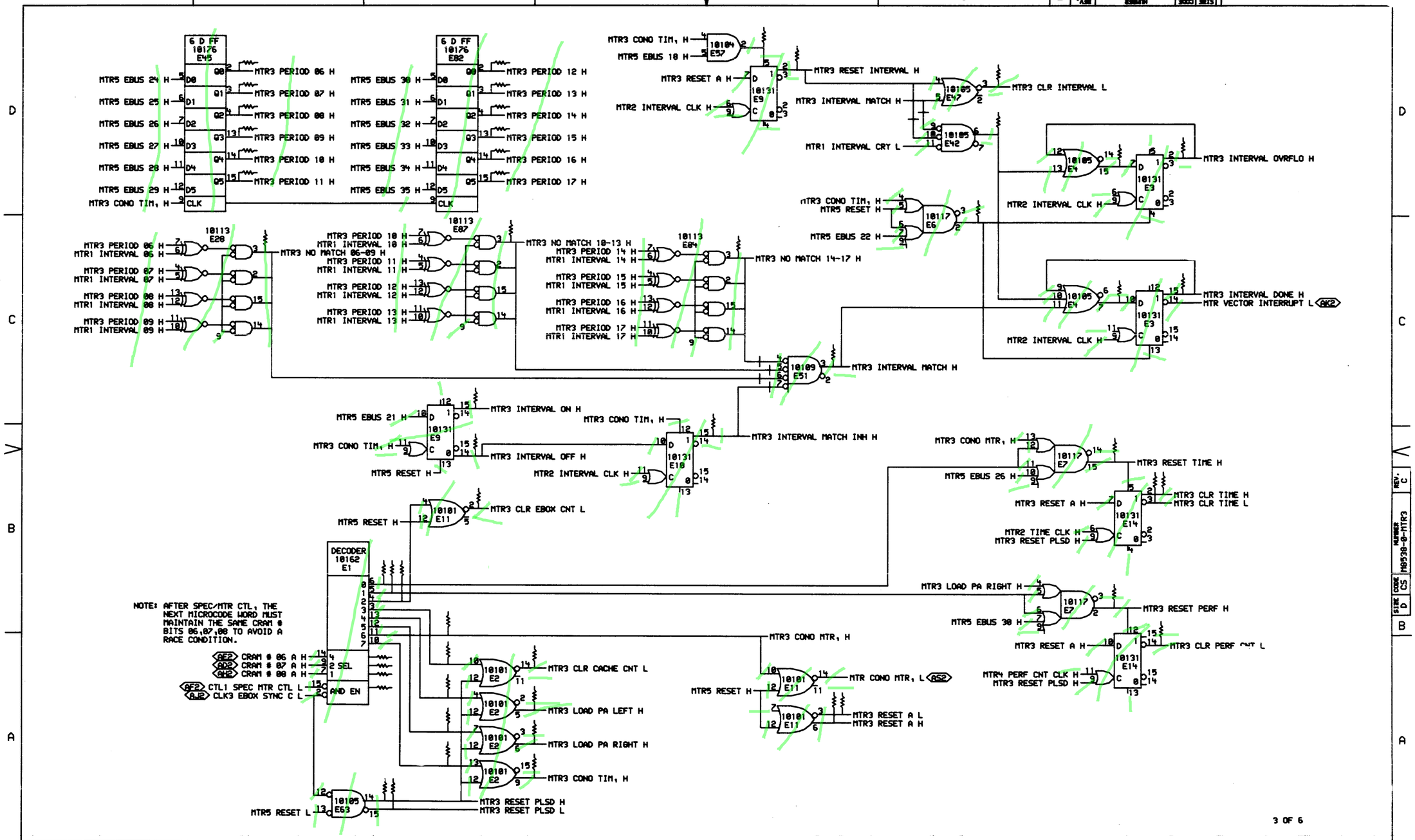

"THIS DRAWING AND SPECIFICATIONS, HEREIN, ARE THE PROPERTY OF DIGITAL EQUIPMENT CORPORATION AND SHALL NOT BE REPRODUCED OR COPIED OR USED IN WHOLE OR IN PART AS THE BASIS FOR THE MANUFACTURE OR SALE OF ITEMS WITHOUT WRITTEN PERMISSION. COPYRIGHT © 1977, DIGITAL EQUIPMENT CORPORATION"

REVISIONS		
CHK	CHANGE NO.	REV
	M8538 00003	C
	L. LEONARD	

digital

DRN. L. Leonard — DATE 03-FEB-77
CHK D. Johnson — DATE 7/4/77
ENG. P. Kuulee — DATE 7 FEB 77
BOARD LOCATION: 4F33
SHEET 1 OF 1
NEXT HIGHER ASSEMBLY: B-DD-M8538-0
MTR3ER.RWC(4,575) 07-FEB-77 07:23
FIR"T USED ON OPTION/MODEL: KL10

TITLE: INTERVAL TIMER

SIZE	CODE	NUMBER	REV.
D	CS	M8538-0-MTR3	C

329

1 MR

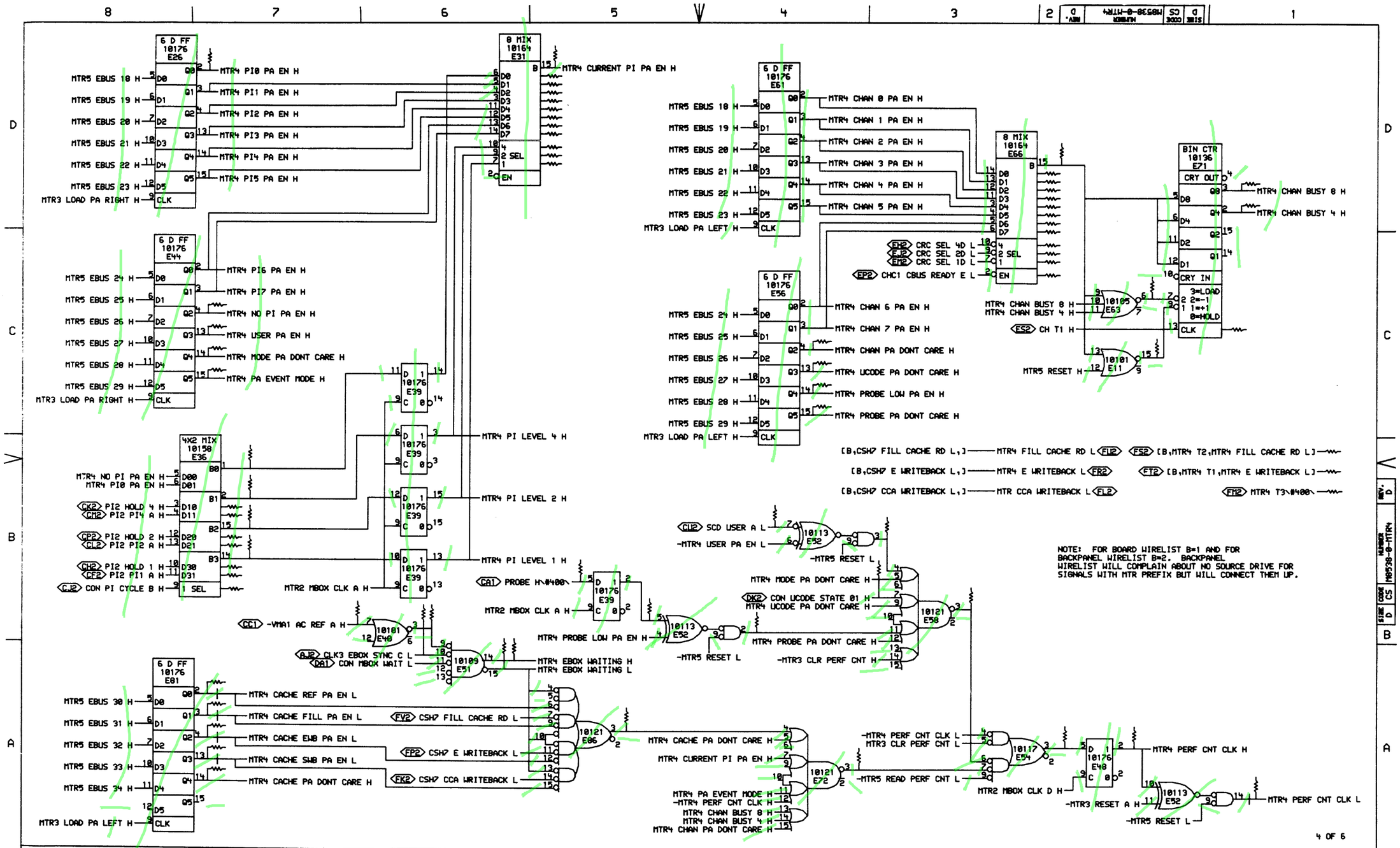

"THIS DRAWING AND SPECIFICATIONS, HEREIN, ARE THE PROPERTY OF DIGITAL EQUIPMENT CORPORATION AND SHALL NOT BE REPRODUCED OR COPIED OR USED IN WHOLE OR IN PART AS THE BASIS FOR THE MANUFACTURE OR SALE OF ITEMS WITHOUT WRITTEN PERMISSION. COPYRIGHT © 1977, DIGITAL EQUIPMENT CORPORATION"

REVISIONS		
CHK	CHANGE NO.	REV
	GN M8538-CCCC5	E

digital

DRN. J. Toomey DATE 06-APR-77 ENG. DATE 11Apr77
CHK D. DATE 8/22/77 BOARD LOCATION: 4A F33 SHEET 1 OF
MTR4ER.DRL[4,575] 06-APR-77 10:24 NEXT HIGHER ASSEMBLY: B-DD-M8538-0
FIRST USED ON OPTION/MODEL: KL10

TITLE: PERFORMANCE ANALYSIS

SIZE	CODE	NUMBER	REV.
D	CS	M8538-0-MTR4	D

39c

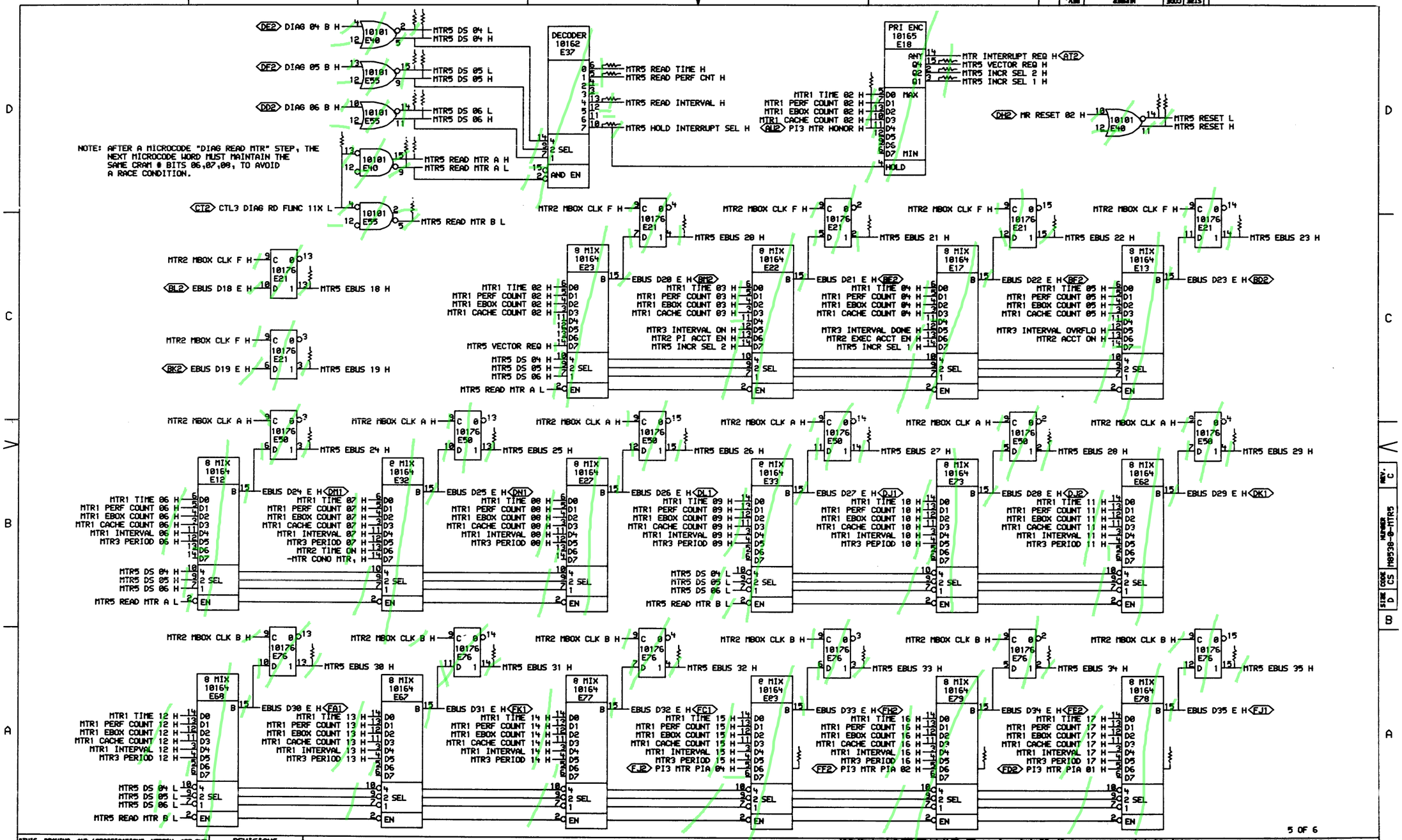

"THIS DRAWING AND SPECIFICATIONS, HEREIN, ARE THE PROPERTY OF DIGITAL EQUIPMENT CORPORATION AND SHALL NOT BE REPRODUCED OR COPIED OR USED IN WHOLE OR IN PART AS THE BASIS FOR THE MANUFACTURE OR SALE OF ITEMS WITHOUT WRITTEN PERMISSION. COPYRIGHT © 1977, DIGITAL EQUIPMENT CORPORATION"

REVISIONS		
CHK	CHANGE NO.	REV
	M8538-00003	C
	J. LEONARD 12-MAR-77	

digital

DRN J. Leonard	DATE 01-FEB-77	ENG P. Kemper	DATE 7 FEB 77
CHK	DATE	BOARD LOCATION: 4AF33	
		SHEET 1 OF 1	
MTRNBR.RVC(4,253)	18-FEB-77 02:44	NEXT HIGHER ASSEMBLY:	
FIRST USED ON OPTION/MODEL: KL10		B-DD-M8538-0	

TITLE: EBUS MIXERS AND BUFFERS

SIZE	CODE	NUMBER	REV.
D	CS	M8538-0-MTR5	C

331

MR

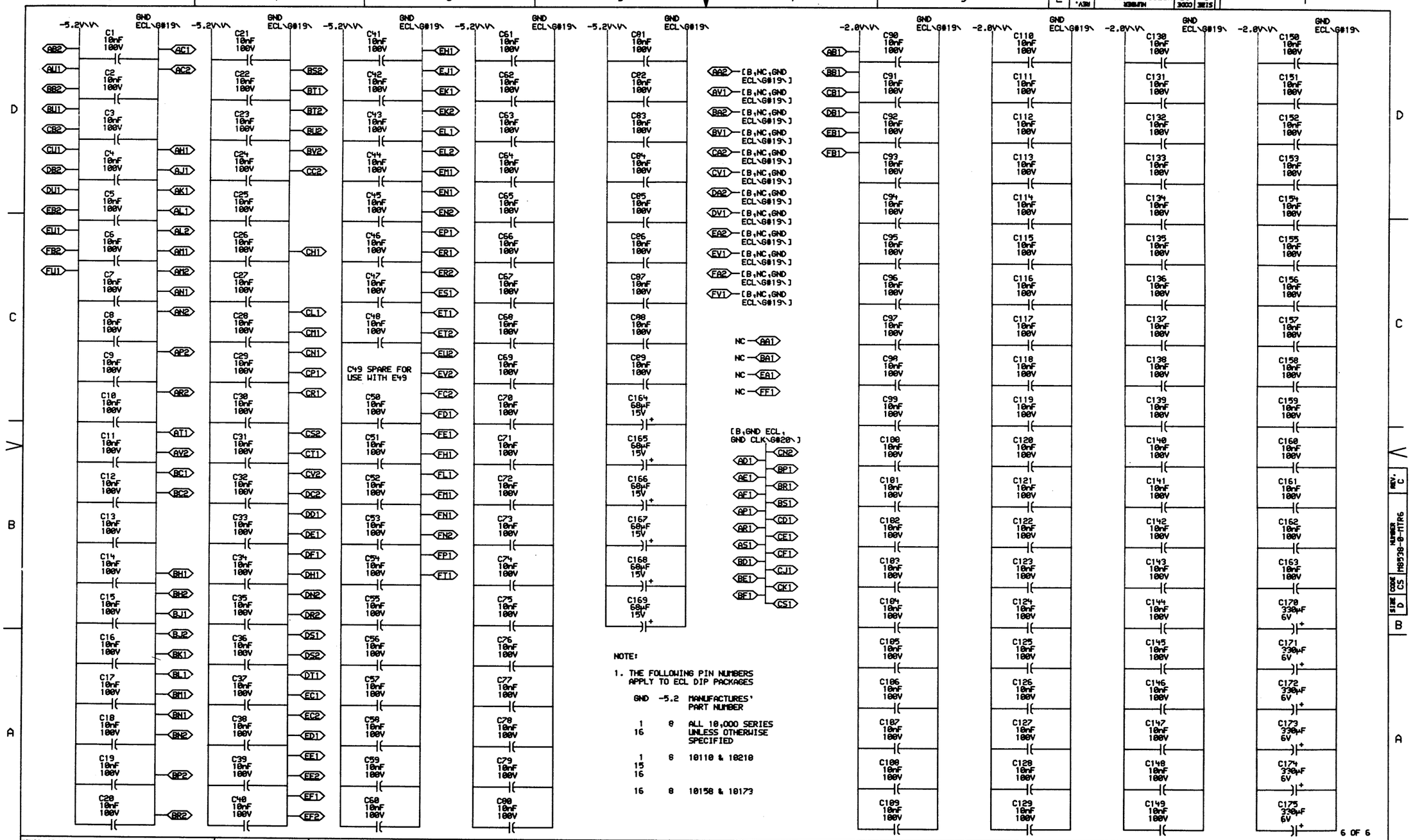

NOTE:

1. THE FOLLOWING PIN NUMBERS APPLY TO ECL DIP PACKAGES

GND	-5.2	MANUFACTURES' PART NUMBER
1 16	8	ALL 10,000 SERIES UNLESS OTHERWISE SPECIFIED
1 15 16	8	10110 & 10210
16	8	10158 & 10173

"THIS DRAWING AND SPECIFICATIONS, HEREIN, ARE THE PROPERTY OF DIGITAL EQUIPMENT CORPORATION AND SHALL NOT BE REPRODUCED OR COPIED OR USED IN WHOLE OR IN PART AS THE BASIS FOR THE MANUFACTURE OR SALE OF ITEMS WITHOUT WRITTEN PERMISSION.
COPYRIGHT © 1977, DIGITAL EQUIPMENT CORPORATION"

REVISIONS

CHK	CHANGE NO.	REV
	M8538-00003	C
	W.MILLER 10-APR-77	
	J.J. LEONARD 13-APR-77	

digital

DRN. J. Lochy 04-FEB-77
CHK'D. W. Johnson 2/8/77
ENG. P. Kenyon DATE 7 FEB 77
BOARD LOCATION: 4A33
SHEET 1 OF 1
MTRSER.RVC(4,575) 03-FEB-77 16:02
NEXT HIGHER ASSEMBLY: B-DD-M8538-0
FIRST USED ON OPTION/MODEL: KL10

TITLE: METERS POWER, GND, CAPS

SIZE	CODE	NUMBER	REV.
D	CS	M8538-0-MTR6	C

MR

332.

RESISTOR LOC(PIN)	SHOWN DRW#	ON REF	VALUE	TERMINATES SIGNAL
R167(1)	MTR3	A6	68Ω	%E1(10)
R169(1)	MTR3	A6	68Ω	%E1(12)
R168(1)	MTR3	A6	68Ω	%E1(13)
R170(1)	MTR3	A6	68Ω	%E1(3)
R248(1)	MTR3	B6	68Ω	%E1(4)
R172(1)	MTR3	B6	68Ω	%E1(5)
R166(1)	MTR3	B6	68Ω	%E1(6)
R292(1)	MTR4	C2	68Ω	%E11(15)
R102(1)	MTR1	C6	68Ω	%E15(4)
R9(1)	MTR1	C4	68Ω	%E25(4)
R57(1)	MTR1	C5	68Ω	%E29(4)
R56(1)	MTR1	C2	68Ω	%E34(4)
R4(1)	MTR2	A4	68Ω	%E35(14)
R67(1)	MTR2	C4	68Ω	%E35(3)
R264(1)	MTR4	B7	68Ω	%E36(1)
R268(1)	MTR4	B7	68Ω	%E36(14)
R263(1)	MTR4	B7	68Ω	%E36(15)
R269(1)	MTR4	B7	68Ω	%E36(2)
R257(1)	MTR4	D5	68Ω	%E39(14)
R133(1)	MTR4	B5	68Ω	%E39(2)
R131(1)	MTR2	C5	68Ω	%E39(4)
R100(1)	MTR3	D2	68Ω	%E4(15)
R6(1)	MTR2	A3	68Ω	%E4(3)
R101(1)	MTR3	C2	68Ω	%E4(7)
R204(1)	MTR4	B6	68Ω	%E40(3)
R7(1)	MTR2	C4	68Ω	%E42(15)
R23(1)	MTR2	C7	68Ω	%E42(3)
R52(1)	MTR3	D3	68Ω	%E42(6)
R29(1)	MTR2	A1	68Ω	%E43(3)
R24(1)	MTR2	D2	68Ω	%E46(14)
R30(1)	MTR2	D5	68Ω	%E46(3)
R25(1)	MTR2	A3	68Ω	%E47(14)
R271(1)	MTR2	C6	68Ω	%E47(6)
R27(1)	MTR2	A2	68Ω	%E5(15)
R70(1)	MTR2	A3	68Ω	%E5(2)
R32(1)	MTR2	D4	68Ω	%E52(15)
R80(1)	MTR4	B4	68Ω	%E52(2)
R78(1)	MTR4	B3	68Ω	%E52(3)
R31(1)	MTR4	A2	68Ω	%E54(3)
R20(1)	MTR2	C7	68Ω	%E55(3)

RESISTOR LOC(PIN)	SHOWN DRW#	ON REF	VALUE	TERMINATES SIGNAL
R48(1)	MTR3	D4	68Ω	%E57(2)
R35(1)	MTR4	B3	68Ω	%E58(3)
R249(1)	MTR2	B6	68Ω	%E6(15)
R99(1)	MTR3	C3	68Ω	%E6(2)
R37(1)	MTR2	A6	68Ω	%E60(4)
R38(1)	MTR2	A7	68Ω	%E63(3)
R293(1)	MTR4	C2	68Ω	%E63(6)
R243(1)	MTR4	D2	68Ω	%E66(15)
R36(1)	MTR4	A4	68Ω	%E72(3)
R75(1)	MTR1	A3	68Ω	%E74(4)
R42(1)	MTR1	A5	68Ω	%E75(4)
R40(1)	MTR1	A6	68Ω	%E80(4)
R83(1)	MTR1	A7	68Ω	%E85(4)
R223(1)	MTR4	A5	68Ω	%E86(3)
R11(1)	MTR1	B2	68Ω	%E90(4)
R285(1)	MTR4	C1	68Ω	CH T1 H
R220(1)	MTR4	C2	68Ω	-CHC1 CBUS READY E H
R125(1)	MTR2	C2	68Ω	CLK1 MTR H
R137(1)	MTR4	B6	68Ω	-CLK3 EBOX SYNC C H
R64(1)	MTR4	B7	68Ω	CON PI CYCLE B H
R81(1)	MTR4	B3	68Ω	CON UCODE STATE 01 H
R66(1)	MTR2	C7	68Ω	CON UCODE STATE 03 H
R239(1)	MTR3	A6	68Ω	CRAM # 06 A H
R241(1)	MTR3	A6	68Ω	CRAM # 07 A H
R240(1)	MTR3	A6	68Ω	CRAM # 08 A H
R290(1)	MTR4	C2	68Ω	-CRC SEL 1D H
R287(1)	MTR4	C2	68Ω	-CRC SEL 2D H
R288(1)	MTR4	C2	68Ω	-CRC SEL 4D H
R238(1)	MTR3	A6	68Ω	-CTL1 SPEC MTR CTL H
R275(1)	MTR5	D7	68Ω	-CTL3 DIAG RD FUNC 11X H
R294(1)	MTR4	B1	68Ω	MTR T1
R295(1)	MTR4	B1	68Ω	MTR T2
R108(1)	MTR1	D5	68Ω	MTR1 CACHE COUNT 02 H
R184(1)	MTR1	D5	68Ω	MTR1 CACHE COUNT 03 H
R180(1)	MTR1	D5	68Ω	MTR1 CACHE COUNT 04 H
R103(1)	MTR1	D5	68Ω	MTR1 CACHE COUNT 05 H
R174(1)	MTR1	C5	68Ω	MTR1 CACHE COUNT 06 H
R194(1)	MTR1	C5	68Ω	MTR1 CACHE COUNT 07 H
R189(1)	MTR1	C5	68Ω	MTR1 CACHE COUNT 08 H
R118(1)	MTR1	C5	68Ω	MTR1 CACHE COUNT 09 H

RESISTOR LOC(PIN)	SHOWN DRW#	ON REF	VALUE	TERMINATES SIGNAL
R149(1)	MTR1	B6	68Ω	MTR1 CACHE COUNT 10 H
R213(1)	MTR1	B6	68Ω	MTR1 CACHE COUNT 11 H
R148(1)	MTR1	B6	68Ω	MTR1 CACHE COUNT 12 H
R219(1)	MTR1	B6	68Ω	MTR1 CACHE COUNT 13 H
R232(1)	MTR1	A6	68Ω	MTR1 CACHE COUNT 14 H
R161(1)	MTR1	A6	68Ω	MTR1 CACHE COUNT 15 H
R89(1)	MTR1	A6	68Ω	MTR1 CACHE COUNT 16 H
R155(1)	MTR1	A6	68Ω	MTR1 CACHE COUNT 17 H
R60(1)	MTR1	C5	68Ω	-MTR1 CACHE CRY 10 IN H
R59(1)	MTR1	D6	68Ω	MTR1 EBOX COUNT 02 H
R187(1)	MTR1	D6	68Ω	MTR1 EBOX COUNT 03 H
R181(1)	MTR1	D6	68Ω	MTR1 EBOX COUNT 04 H
R104(1)	MTR1	D6	68Ω	MTR1 EBOX COUNT 05 H
R175(1)	MTR1	C6	68Ω	MTR1 EBOX COUNT 06 H
R195(1)	MTR1	C6	68Ω	MTR1 EBOX COUNT 07 H
R190(1)	MTR1	C6	68Ω	MTR1 EBOX COUNT 08 H
R117(1)	MTR1	C6	68Ω	MTR1 EBOX COUNT 09 H
R153(1)	MTR1	B7	68Ω	MTR1 EBOX COUNT 10 H
R209(1)	MTR1	B7	68Ω	MTR1 EBOX COUNT 11 H
R147(1)	MTR1	B7	68Ω	MTR1 EBOX COUNT 12 H
R215(1)	MTR1	B7	68Ω	MTR1 EBOX COUNT 13 H
R233(1)	MTR1	A7	68Ω	MTR1 EBOX COUNT 14 H
R156(1)	MTR1	A7	68Ω	MTR1 EBOX COUNT 15 H
R88(1)	MTR1	A7	68Ω	MTR1 EBOX COUNT 16 H
R154(1)	MTR1	A7	68Ω	MTR1 EBOX COUNT 17 H
R8(1)	MTR1	C6	68Ω	-MTR1 EBOX CRY 10 IN H
R177(1)	MTR1	C1	68Ω	MTR1 INTERVAL 06 H
R193(1)	MTR1	C1	68Ω	MTR1 INTERVAL 07 H
R251(1)	MTR1	C1	68Ω	MTR1 INTERVAL 08 H
R63(1)	MTR1	C1	68Ω	MTR1 INTERVAL 09 H
R152(1)	MTR1	B2	68Ω	MTR1 INTERVAL 10 H
R218(1)	MTR1	B2	68Ω	MTR1 INTERVAL 11 H
R145(1)	MTR1	B2	68Ω	MTR1 INTERVAL 12 H
R222(1)	MTR1	B2	68Ω	MTR1 INTERVAL 13 H
R229(1)	MTR1	A2	68Ω	MTR1 INTERVAL 14 H
R162(1)	MTR1	A2	68Ω	MTR1 INTERVAL 15 H
R91(1)	MTR1	A2	68Ω	MTR1 INTERVAL 16 H
R157(1)	MTR1	A2	68Ω	MTR1 INTERVAL 17 H
R68(1)	MTR1	C1	68Ω	-MTR1 INTERVAL CRY H
R47(1)	MTR1	B2	68Ω	-MTR1 INTERVAL CRY 14 IN H

RESISTOR LOC(PIN)	SHOWN DRW#	ON REF	VALUE	TERMINATES SIGNAL
R114(1)	MTR1	D2	68Ω	MTR1 PERF COUNT 02 H
R185(1)	MTR1	D2	68Ω	MTR1 PERF COUNT 03 H
R183(1)	MTR1	D2	68Ω	MTR1 PERF COUNT 04 H
R105(1)	MTR1	D2	68Ω	MTR1 PERF COUNT 05 H
R176(1)	MTR1	C2	68Ω	MTR1 PERF COUNT 06 H
R197(1)	MTR1	C2	68Ω	MTR1 PERF COUNT 07 H
R192(1)	MTR1	C2	68Ω	MTR1 PERF COUNT 08 H
R123(1)	MTR1	C2	68Ω	MTR1 PERF COUNT 09 H
R86(1)	MTR1	B3	68Ω	MTR1 PERF COUNT 10 H
R210(1)	MTR1	B3	68Ω	MTR1 PERF COUNT 11 H
R146(1)	MTR1	B3	68Ω	MTR1 PERF COUNT 12 H
R216(1)	MTR1	B3	68Ω	MTR1 PERF COUNT 13 H
R231(1)	MTR1	A3	68Ω	MTR1 PERF COUNT 14 H
R159(1)	MTR1	A3	68Ω	MTR1 PERF COUNT 15 H
R84(1)	MTR1	A3	68Ω	MTR1 PERF COUNT 16 H
R150(1)	MTR1	A3	68Ω	MTR1 PERF COUNT 17 H
R61(1)	MTR1	C3	68Ω	-MTR1 PERF CRY 10 IN H
R116(1)	MTR1	D3	68Ω	MTR1 TIME 02 H
R186(1)	MTR1	D3	68Ω	MTR1 TIME 03 H
R182(1)	MTR1	D3	68Ω	MTR1 TIME 04 H
R106(1)	MTR1	D3	68Ω	MTR1 TIME 05 H
R179(1)	MTR1	C4	68Ω	MTR1 TIME 06 H
R196(1)	MTR1	C4	68Ω	MTR1 TIME 07 H
R191(1)	MTR1	C4	68Ω	MTR1 TIME 08 H
R124(1)	MTR1	C4	68Ω	MTR1 TIME 09 H
R87(1)	MTR1	B4	68Ω	MTR1 TIME 10 H
R211(1)	MTR1	B4	68Ω	MTR1 TIME 11 H
R143(1)	MTR1	B4	68Ω	MTR1 TIME 12 H
R217(1)	MTR1	B4	68Ω	MTR1 TIME 13 H
R230(1)	MTR1	A5	68Ω	MTR1 TIME 14 H
R160(1)	MTR1	A5	68Ω	MTR1 TIME 15 H
R85(1)	MTR1	A5	68Ω	MTR1 TIME 16 H
R151(1)	MTR1	A5	68Ω	MTR1 TIME 17 H
R10(1)	MTR1	C4	68Ω	-MTR1 TIME CRY 10 IN H
R138(1)	MTR2	A5	68Ω	MTR2 1 MHZ H
R5(1)	MTR2	A5	68Ω	-MTR2 1 MHZ H
R22(1)	MTR2	B5	68Ω	MTR2 ACCT ON H
R44(1)	MTR2	D5	68Ω	MTR2 CACHE CNT CLK H
R129(1)	MTR2	C6	68Ω	-MTR2 CACHE CNT EN H
R164(1)	MTR2	C2	68Ω	MTR2 COUNT TEN USEC H

NOTE:

1. ALL TERMINATORS HAVE PIN TWO CONNECTED TO -2.0V AND ARE 5% 1/4WATT UNLESS OTHERWISE SPECIFIED
2. ENTRIES ARE SORTED BY SIGNAL NAME
3. % INDICATES OUTPUT OF DIP LOC AND () INDICATES PIN NUMBER

"THIS DRAWING AND SPECIFICATIONS, HEREIN, ARE THE PROPERTY OF DIGITAL EQUIPMENT CORPORATION AND SHALL NOT BE REPRODUCED OR COPIED OR USED IN WHOLE OR IN PART AS THE BASIS FOR THE MANUFACTURE OR SALE OF ITEMS WITHOUT WRITTEN PERMISSION.
COPYRIGHT © 1977, DIGITAL EQUIPMENT CORPORATION"

REVISIONS		
CHK	CHANGE NO.	REV
	M8538-00003	C
	17-OCT-77	
	J. LEONARD	
	12-APR-77	

digital

DRN. P. Smith DATE 29-JAN-77 ENG. P. Kempa DATE 7 FEB 77
CHK'D DATE 2/2/77 BOARD LOCATION: SHEET 1 OF 2
M8538I.RVC[4,575] 28-JAN-77 12:32 NEXT HIGHER ASSEMBLY: B-DD-M8538-0
FIRST USED ON OPTION/MODEL: KL10

TITLE: METERS TERMINATORS

SIZE	CODE	NUMBER	REV.
D	CS	M8538-0-RES	C

MR

333

RESISTOR LOC(PIN)	SHOWN ON DRW#	REF	VALUE	TERMINATES SIGNAL
R128(1)	MTR2	D3	68Ω	MTR2 EBOX CNT CLK H
R127(1)	MTR2	D5	68Ω	MTR2 EBOX CNT EN H
R130(1)	MTR2	D4	68Ω	-MTR2 EBOX CNT EN H
R126(1)	MTR2	D4	68Ω	-MTR2 EBOX HALF COUNT H
R17(1)	MTR2	B5	68Ω	MTR2 EXEC ACCT EN H
R50(1)	MTR2	B1	68Ω	MTR2 INTERVAL CLK H
R267(1)	MTR2	D2	68Ω	MTR2 MBOX CLK A H
R291(1)	MTR2	D2	68Ω	MTR2 MBOX CLK B H
R276(1)	MTR2	D2	68Ω	MTR2 MBOX CLK C H\#400\
R39(1)	MTR2	C2	68Ω	MTR2 MBOX CLK D H
R71(1)	MTR2	C2	68Ω	MTR2 MBOX CLK E H
R252(1)	MTR2	C2	68Ω	MTR2 MBOX CLK F H
R19(1)	MTR2	B5	68Ω	MTR2 PI ACCT EN H
R10(1)	MTR2	C7	68Ω	MTR2 PI IN PROG H
R21(1)	MTR2	C7	68Ω	-MTR2 PI IN PROG H
R95(1)	MTR2	C2	68Ω	-MTR2 TEN USEC H
R3(1)	MTR2	B3	68Ω	MTR2 TIME CLK H
R100(1)	MTR2	C4	68Ω	MTR2 TIME ON H
R12(1)	MTR2	C4	68Ω	-MTR2 TIME ON H
R45(1)	MTR3	A5	68Ω	-MTR3 CLR CACHE CNT H
R46(1)	MTR3	B6	68Ω	-MTR3 CLR EBOX CNT H
R97(1)	MTR3	D3	68Ω	-MTR3 CLR INTERVAL H
R82(1)	MTR3	A2	68Ω	-MTR3 CLR PERF CNT H
R41(1)	MTR3	B2	68Ω	MTR3 CLR TIME H
R43(1)	MTR3	B2	68Ω	-MTR3 CLR TIME H
R1(1)	MTR3	A6	68Ω	MTR3 COND MTR, H
R297(1)	MTR3	A5	68Ω	MTR3 COND TIM, H
R246(1)	MTR3	C2	68Ω	MTR3 INTERVAL DONE H
R51(1)	MTR3	C4	68Ω	MTR3 INTERVAL MATCH H
R206(1)	MTR3	B4	68Ω	MTR3 INTERVAL MATCH INH H
R2(1)	MTR3	B6	68Ω	MTR3 INTERVAL OFF H
R247(1)	MTR3	C6	68Ω	MTR3 INTERVAL ON H
R90(1)	MTR3	D2	68Ω	MTR3 INTERVAL OVRFLO H
R301(1)	MTR3	A5	68Ω	MTR3 LOAD PA LEFT H
R272(1)	MTR3	A5	68Ω	MTR3 LOAD PA RIGHT H
R140(1)	MTR3	C7	68Ω	MTR3 NO MATCH 06-09 H
R205(1)	MTR3	C6	68Ω	MTR3 NO MATCH 10-13 H
R139(1)	MTR3	C4	68Ω	MTR3 NO MATCH 14-17 H
R170(1)	MTR3	D7	68Ω	MTR3 PERIOD 06 H
R119(1)	MTR3	D7	68Ω	MTR3 PERIOD 07 H

RESISTOR LOC(PIN)	SHOWN ON DRW#	REF	VALUE	TERMINATES SIGNAL
R113(1)	MTR3	D7	68Ω	MTR3 PERIOD 08 H
R120(1)	MTR3	D7	68Ω	MTR3 PERIOD 09 H
R237(1)	MTR3	D7	68Ω	MTR3 PERIOD 10 H
R235(1)	MTR3	D7	68Ω	MTR3 PERIOD 11 H
R144(1)	MTR3	D6	68Ω	MTR3 PERIOD 12 H
R221(1)	MTR3	D6	68Ω	MTR3 PERIOD 13 H
R96(1)	MTR3	D6	68Ω	MTR3 PERIOD 14 H
R98(1)	MTR3	D6	68Ω	MTR3 PERIOD 15 H
R92(1)	MTR3	D6	68Ω	MTR3 PERIOD 16 H
R94(1)	MTR3	D6	68Ω	MTR3 PERIOD 17 H
R49(1)	MTR3	A4	68Ω	MTR3 RESET A H
R26(1)	MTR3	A4	68Ω	-MTR3 RESET A H
R74(1)	MTR3	D4	68Ω	MTR3 RESET INTERVAL H
R55(1)	MTR3	B2	68Ω	MTR3 RESET PERF H
R242(1)	MTR3	A6	68Ω	MTR3 RESET PLSD H
R34(1)	MTR3	A6	68Ω	-MTR3 RESET PLSD H
R54(1)	MTR3	B2	68Ω	MTR3 RESET TIME H
R303(1)	MTR4	A7	68Ω	-MTR4 CACHE EWB PA EN H
R302(1)	MTR4	A7	68Ω	-MTR4 CACHE FILL PA EN H
R224(1)	MTR4	A7	68Ω	MTR4 CACHE PA DONT CARE H
R305(1)	MTR4	A7	68Ω	-MTR4 CACHE REF PA EN H
R304(1)	MTR4	A7	68Ω	-MTR4 CACHE SWB PA EN H
R279(1)	MTR4	D2	68Ω	MTR4 CHAN 0 PA EN H
R278(1)	MTR4	D2	68Ω	MTR4 CHAN 1 PA EN H
R277(1)	MTR4	D2	68Ω	MTR4 CHAN 2 PA EN H
R286(1)	MTR4	D2	68Ω	MTR4 CHAN 3 PA EN H
R212(1)	MTR4	D2	68Ω	MTR4 CHAN 4 PA EN H
R283(1)	MTR4	D2	68Ω	MTR4 CHAN 5 PA EN H
R289(1)	MTR4	D2	68Ω	MTR4 CHAN 6 PA EN H
R284(1)	MTR4	C2	68Ω	MTR4 CHAN 7 PA EN H
R142(1)	MTR4	D1	68Ω	MTR4 CHAN BUSY 4 H
R141(1)	MTR4	D1	68Ω	MTR4 CHAN BUSY 8 H
R225(1)	MTR4	C4	68Ω	MTR4 CHAN PA DONT CARE H
R226(1)	MTR4	D5	68Ω	MTR4 CURRENT PI PA EN H
R73(1)	MTR4	A6	68Ω	MTR4 EBOX WAITING H
R306(1)	MTR4	A6	68Ω	-MTR4 EBOX WAITING H
R76(1)	MTR4	C7	68Ω	MTR4 MODE PA DONT CARE H
R265(1)	MTR4	C7	68Ω	MTR4 NO PI PA EN H
R227(1)	MTR4	C7	68Ω	MTR4 PA EVENT MODE H
R53(1)	MTR4	A2	68Ω	MTR4 PERF CNT CLK H

RESISTOR LOC(PIN)	SHOWN ON DRW#	REF	VALUE	TERMINATES SIGNAL
R220(1)	MTR4	A1	68Ω	-MTR4 PERF CNT CLK H
R15(1)	MTR4	D5	68Ω	MTR4 PI LEVEL 1 H
R16(1)	MTR4	D5	68Ω	MTR4 PI LEVEL 2 H
R14(1)	MTR4	D5	68Ω	MTR4 PI LEVEL 4 H
R266(1)	MTR4	D7	68Ω	MTR4 PI0 PA EN H
R258(1)	MTR4	D5	68Ω	MTR4 PI1 PA EN H
R260(1)	MTR4	D5	68Ω	MTR4 PI2 PA EN H
R259(1)	MTR4	D5	68Ω	MTR4 PI3 PA EN H
R256(1)	MTR4	D5	68Ω	MTR4 PI4 PA EN H
R253(1)	MTR4	D5	68Ω	MTR4 PI5 PA EN H
R254(1)	MTR4	D5	68Ω	MTR4 PI6 PA EN H
R255(1)	MTR4	D5	68Ω	MTR4 PI7 PA EN H
R132(1)	MTR4	C4	68Ω	MTR4 PROBE LOW PA EN H
R77(1)	MTR4	C4	68Ω	MTR4 PROBE PA DONT CARE H
R296(1)	MTR4	B1	68Ω	MTR4 T3\#400\
R79(1)	MTR4	C4	68Ω	MTR4 UCODE PA DONT CARE H
R135(1)	MTR4	C7	68Ω	MTR4 USER PA EN H
R112(1)	MTR5	D6	68Ω	MTR5 DS 04 H
R214(1)	MTR5	D6	68Ω	-MTR5 DS 04 H
R111(1)	MTR5	D6	68Ω	MTR5 DS 05 H
R121(1)	MTR5	D6	68Ω	-MTR5 DS 05 H
R115(1)	MTR5	D6	68Ω	MTR5 DS 06 H
R122(1)	MTR5	D6	68Ω	-MTR5 DS 06 H
R136(1)	MTR5	C7	68Ω	MTR5 EBUS 18 H
R280(1)	MTR5	C7	68Ω	MTR5 EBUS 19 H
R281(1)	MTR5	C5	68Ω	MTR5 EBUS 20 H
R282(1)	MTR5	C3	68Ω	MTR5 EBUS 21 H
R273(1)	MTR5	C2	68Ω	MTR5 EBUS 22 H
R274(1)	MTR5	C1	68Ω	MTR5 EBUS 23 H
R13(1)	MTR5	B7	68Ω	MTR5 EBUS 24 H
R65(1)	MTR5	B6	68Ω	MTR5 EBUS 25 H
R171(1)	MTR5	B5	68Ω	MTR5 EBUS 26 H
R208(1)	MTR5	B3	68Ω	MTR5 EBUS 27 H
R207(1)	MTR5	B2	68Ω	MTR5 EBUS 28 H
R203(1)	MTR5	B1	68Ω	MTR5 EBUS 29 H
R173(1)	MTR5	A7	68Ω	MTR5 EBUS 30 H
R236(1)	MTR5	A6	68Ω	MTR5 EBUS 31 H
R300(1)	MTR5	A5	68Ω	MTR5 EBUS 32 H
R298(1)	MTR5	A3	68Ω	MTR5 EBUS 33 H
R299(1)	MTR5	A2	68Ω	MTR5 EBUS 34 H

RESISTOR LOC(PIN)	SHOWN ON DRW#	REF	VALUE	TERMINATES SIGNAL
R234(1)	MTR5	A1	68Ω	MTR5 EBUS 35 H
R110(1)	MTR5	D3	68Ω	MTR5 HOLD INTERRUPT SEL H
R245(1)	MTR5	D3	68Ω	MTR5 INCR SEL 1 H
R250(1)	MTR5	D3	68Ω	MTR5 INCR SEL 2 H
R20(1)	MTR5	D5	68Ω	MTR5 READ INTERVAL H
R72(1)	MTR5	D6	68Ω	MTR5 READ MTR A H
R58(1)	MTR5	D6	68Ω	-MTR5 READ MTR A H
R62(1)	MTR5	C6	68Ω	-MTR5 READ MTR B H
R33(1)	MTR5	D5	68Ω	MTR5 READ PERF CNT H
R69(1)	MTR5	D5	68Ω	MTR5 READ TIME H
R244(1)	MTR5	D2	68Ω	MTR5 RESET H
R165(1)	MTR5	D2	68Ω	-MTR5 RESET H
R109(1)	MTR5	D3	68Ω	MTR5 VECTOR REQ H
R262(1)	MTR4	B7	68Ω	PI2 HOLD 1 H
R200(1)	MTR4	B7	68Ω	PI2 HOLD 2 H
R201(1)	MTR4	B7	68Ω	PI2 HOLD 4 H
R261(1)	MTR4	B7	68Ω	PI2 PI1 A H
R199(1)	MTR4	B7	68Ω	PI2 PI2 A H
R198(1)	MTR4	B7	68Ω	PI2 PI4 A H
R107(1)	MTR5	D3	68Ω	PI3 MTR HONOR H
R158(1)	MTR5	A2	68Ω	PI3 MTR PIA 01 H
R93(1)	MTR5	A3	68Ω	PI3 MTR PIA 02 H
R163(1)	MTR5	A4	68Ω	PI3 MTR PIA 04 H
R270(1)	MTR4	B5	68Ω	PROBE H\#400\
R134(1)	MTR4	B4	68Ω	-SCD USER A H
R202(1)	MTR4	B6	68Ω	-VMA1 AC REF A H

NOTE:

1. ALL TERMINATORS HAVE PIN TWO CONNECTED TO -2.0V AND ARE 5% 1/4WATT UNLESS OTHERWISE SPECIFIED
2. ENTRIES ARE SORTED BY SIGNAL NAME
3. % INDICATES OUTPUT OF DIP LOC AND ( ) INDICATES PIN NUMBER

"THIS DRAWING AND SPECIFICATIONS, HEREIN, ARE THE PROPERTY OF DIGITAL EQUIPMENT CORPORATION AND SHALL NOT BE REPRODUCED OR COPIED OR USED IN WHOLE OR IN PART AS THE BASIS FOR THE MANUFACTURE OR SALE OF ITEMS WITHOUT WRITTEN PERMISSION.
COPYRIGHT © 1977, DIGITAL EQUIPMENT CORPORATION"

REVISIONS		
CHK	CHANGE NO.	REV

digital

DRN. C Smith DATE 29-JAN-77 ENG P. Kemper DATE 7 FEB 77
CHK'D. J. Mathews DATE 2/6/77
M8538.RVC(4,575) 29-JAN-77 12:32
FIRST USED ON OPTION/MODEL: KL10
NEXT HIGHER ASSEMBLY: B-DD-M8538-0
BOARD LOCATION:
SHEET 2 OF 2

TITLE: METERS TERMINATORS

SIZE	CODE	NUMBER	REV.
D	CS	M8538-0-RES	C

MR 1

334

SIZE	CODE	NUMBER	REV.
B	DD	M854Ø-Ø	

DRAWING NO.	NO. OF SHTS	PART NO.	DESCRIPTION	REVISIONS
			MODULE REVISION	A
D-UA-M854Ø-Ø-Ø	5		SHIFT MATRIX BOARD	-
D-CS-M854Ø-Ø-SHM1	1		SHIFT MATRIX CONTROL	-
D-CS-M854Ø-Ø-SHM2	1		SHIFT MATRIX SHIFT 16,32	-
D-CS-M854Ø-Ø-SHM3	1		SHIFT MATRIX SHIFT 4,8	-
D-CS-M854Ø-Ø-SHM4	1		SHIFT MATRIX SHIFT 1,2	-
D-CS-M854Ø-Ø-SHM5	1		SHIFT MATRIX POWER,GND,CAPS	-
D-CS-M854Ø-Ø-RES	2		SHIFT MATRIX TERMINATORS	-
D-AH-M854Ø-Ø-5	4		SHIFT MATRIX BOARD	-
		5011886	ETCHED CIRCUIT BOARD	A
M854Ø-Ø-L	-		P.C. DESIGN DATA BASE	REF
M854Ø-Ø-PL	-		INSERTION P/L DATA BASE	REF
POO-M854Ø-ØØ	-		PROCESS SHEETS	REF

NOTES:

REVISIONS		
DATE	CHG NO.	REV.

"THIS DRAWING AND SPECIFICATIONS, HEREIN, ARE THE PROPERTY OF DIGITAL EQUIPMENT CORPORATION AND SHALL NOT BE REPRODUCED OR COPIED OR USED IN WHOLE OR IN PART AS THE BASIS FOR THE MANUFACTURE OR SALE OF ITEMS WITHOUT WRITTEN PERMISSION.
COPYRIGHT ©1976, DIGITAL EQUIPMENT CORPORATION"

digital

USED ON OPTION/MODEL	
KL1Ø	

DRN.	RW Counter	29 Sept 76
CHK'D	[illegible]	29 Sep 76
ENG.	Tom [illegible]	5 Oct 76
PROD.	Bill [illegible]	6 OCT 76

TITLE: SHIFT MATRIX BOARD

SIZE	CODE	NUMBER	REV.
B	DD	M854Ø-Ø	

SHEET 1 OF 1

335

DRB 126 EN-01149-16-N176(325)

NR

THIS DRAWING AND SPECIFICATIONS, HEREIN, ARE THE PROPERTY OF DIGITAL EQUIPMENT CORPORATION AND SHALL NOT BE REPRODUCED OR COPIED OR USED IN WHOLE OR IN PART AS THE BASIS FOR THE CONSTRUCTION OR SALE OF ITEMS WITHOUT WRITTEN PERMISSION.
COPYRIGHT © 1975 DIGITAL EQUIPMENT CORPORATION

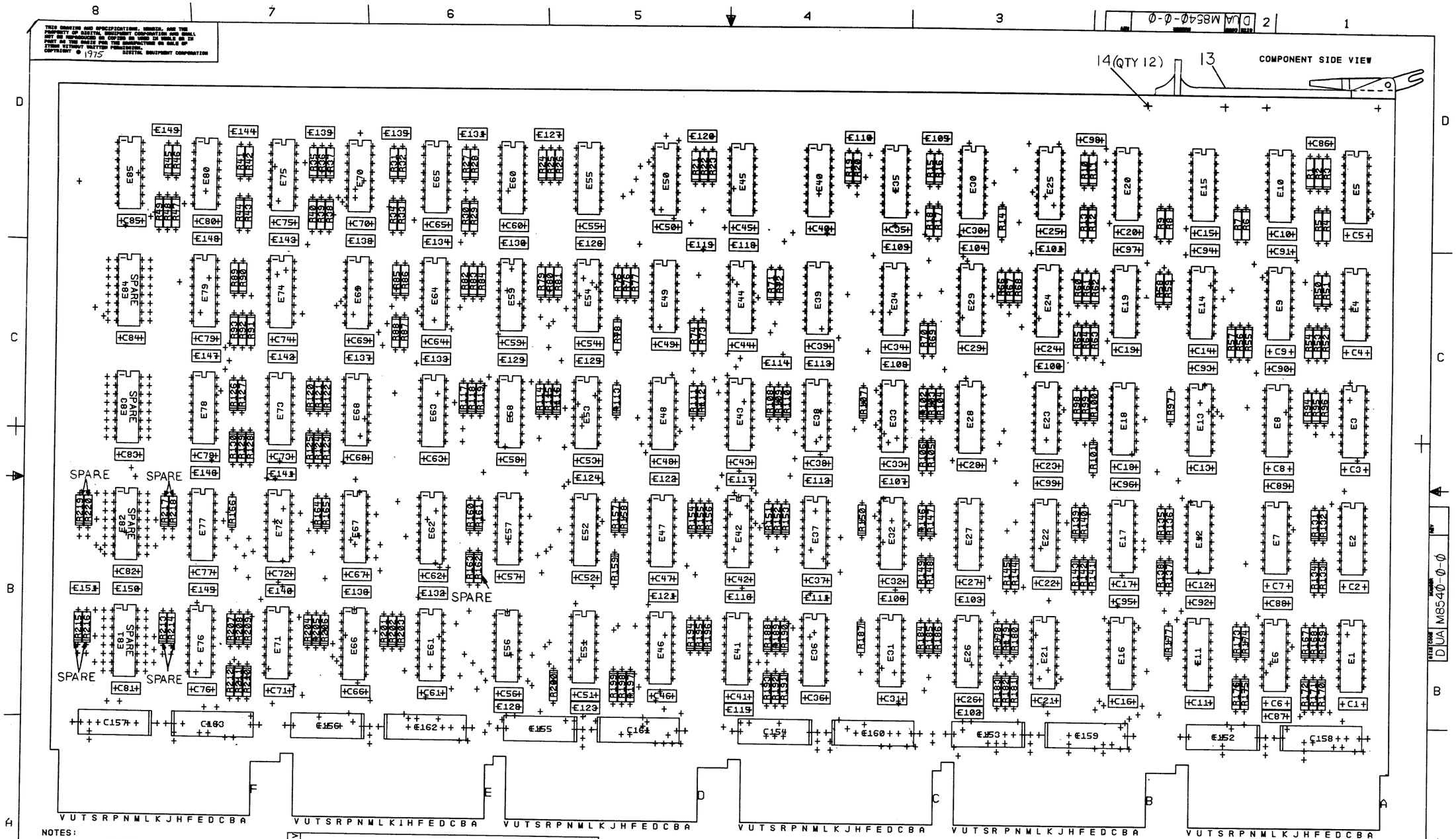

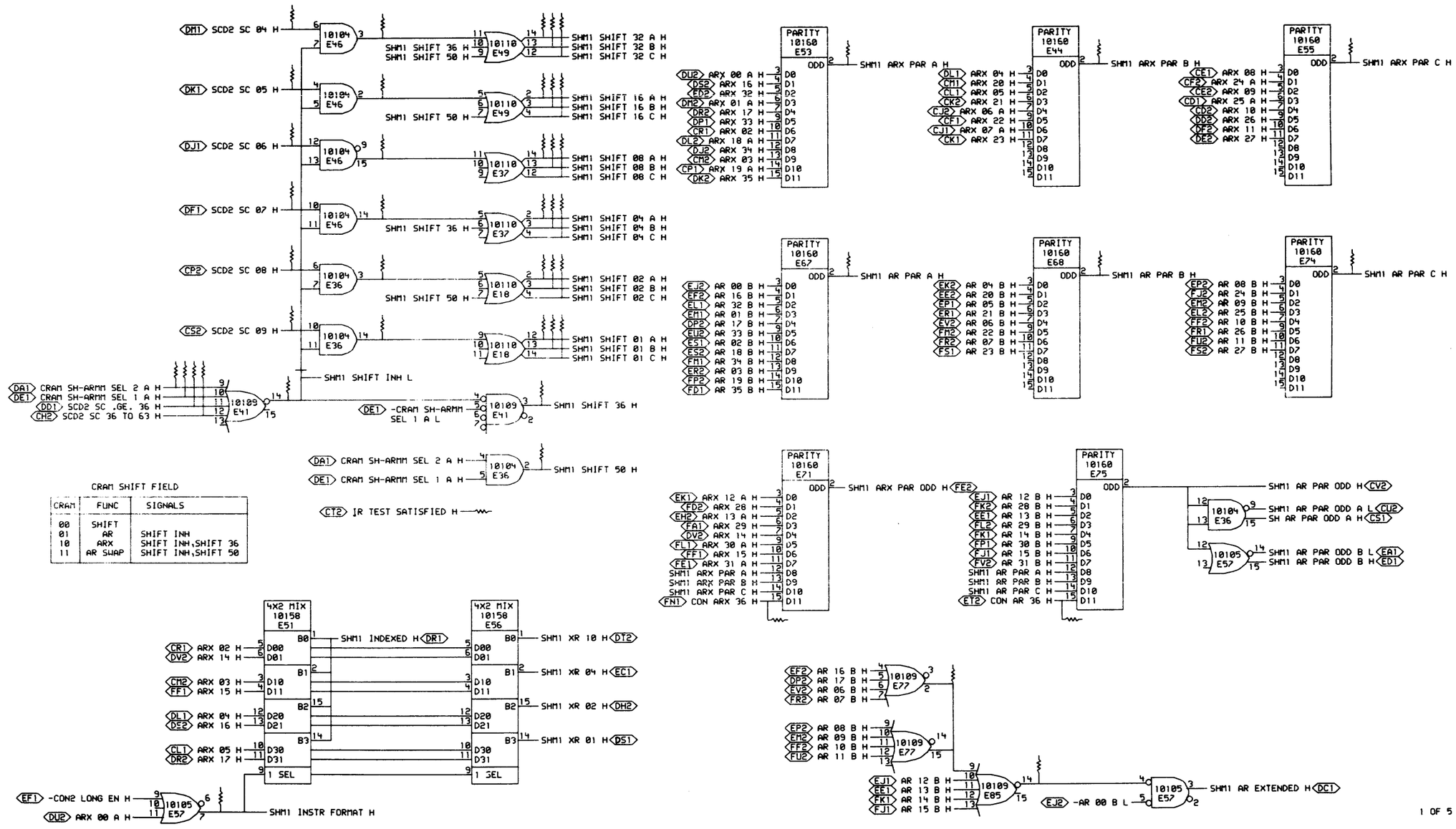

CRAM SHIFT FIELD

CRAM	FUNC	SIGNALS
00	SHIFT	
01	AR	SHIFT INH
10	ARX	SHIFT INH,SHIFT 36
11	AR SWAP	SHIFT INH,SHIFT 50

"THIS DRAWING AND SPECIFICATIONS, HEREIN, ARE THE PROPERTY OF DIGITAL EQUIPMENT CORPORATION AND SHALL NOT BE REPRODUCED OR COPIED OR USED IN WHOLE OR IN PART AS THE BASIS FOR THE MANUFACTURE OR SALE OF ITEMS WITHOUT WRITTEN PERMISSION.
COPYRIGHT © 1976, DIGITAL EQUIPMENT CORPORATION"

REVISIONS

CHK	CHANGE NO.	REV

digital

DRN: D. Loomis DATE 20-SEP-76
CHKD: Tom Eggert DATE 23-Sept-76
ENG: Tom Eggert DATE 23-Sept-76
SHM1EA.RLS[4,161] 19-SEP-76 11:56
FIRST USED ON OPTION/MODEL: KL10
BOARD LOCATION: 4AF46
SHEET 1 OF 1
NEXT HIGHER ASSEMBLY: B-DD-M8540-0

TITLE: SHIFT MATRIX CONTROL

SIZE	CODE	NUMBER	REV.
D	CS	M8540-0-SHM1	

337

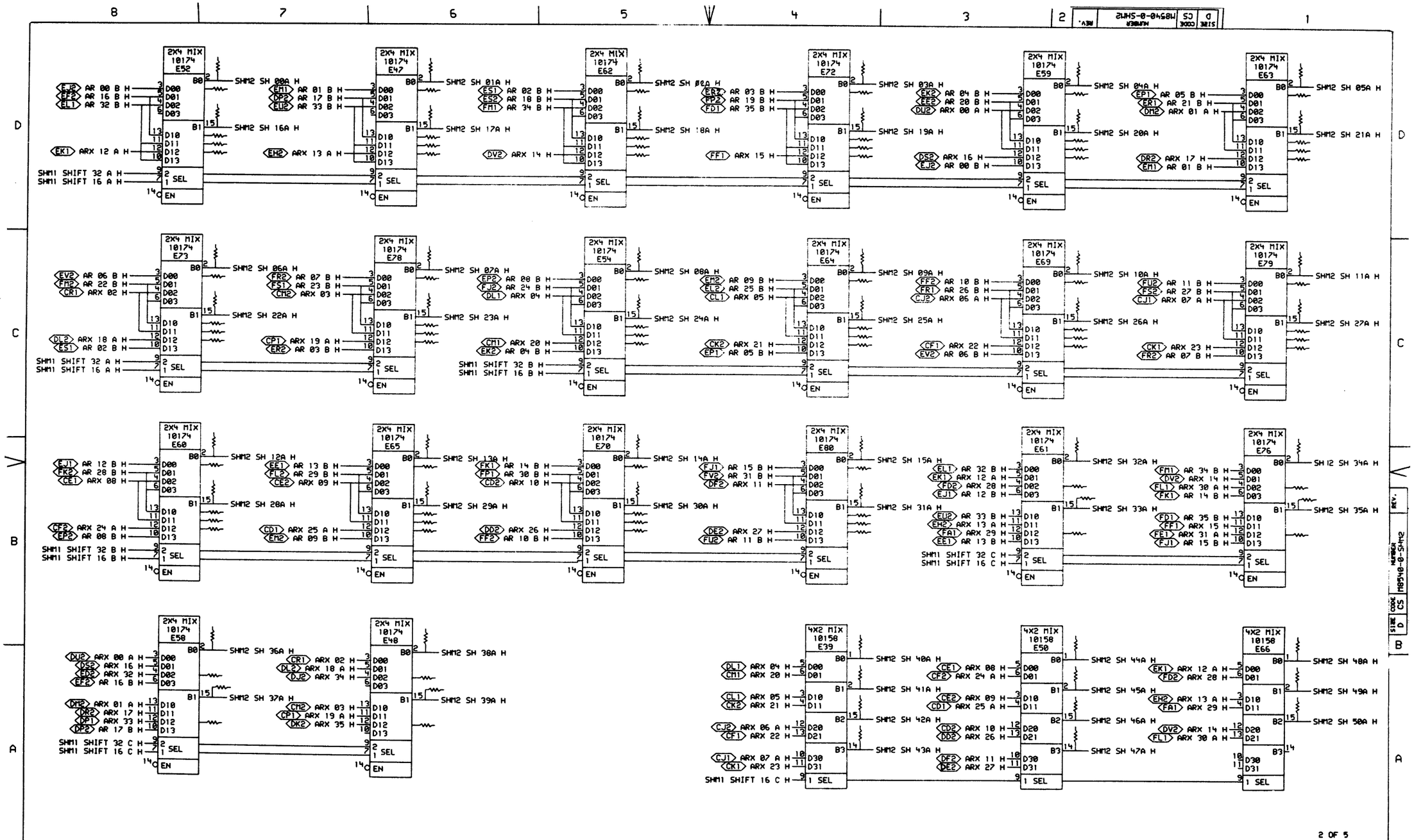

2 OF 5

"THIS DRAWING AND SPECIFICATIONS, HEREIN, ARE THE PROPERTY OF DIGITAL EQUIPMENT CORPORATION AND SHALL NOT BE REPRODUCED OR COPIED OR USED IN WHOLE OR IN PART AS THE BASIS FOR THE MANUFACTURE OR SALE OF ITEMS WITHOUT WRITTEN PERMISSION. COPYRIGHT © 1976, DIGITAL EQUIPMENT CORPORATION"

REVISIONS		
CHK	CHANGE NO.	REV

digital

DRN. M. Stanley DATE 28-SEP-76 ENG. Tom Egan DATE 23 Sept 76
CHKD. Tom Egan DATE 23 Sept 76 BOARD LOCATION: 4AF46
SHM2EA.RLS(4,161) 31-AUG-76 16:54 SHEET 1 OF 1 NEXT HIGHER ASSEMBLY:
FIRST USED ON OPTION/MODEL: KL10 B-DN-M8540-0

TITLE: SHIFT MATRIX SHIFT 16,32

SIZE	CODE	NUMBER	REV.
D	CS	M8540-0-SHM2	

338

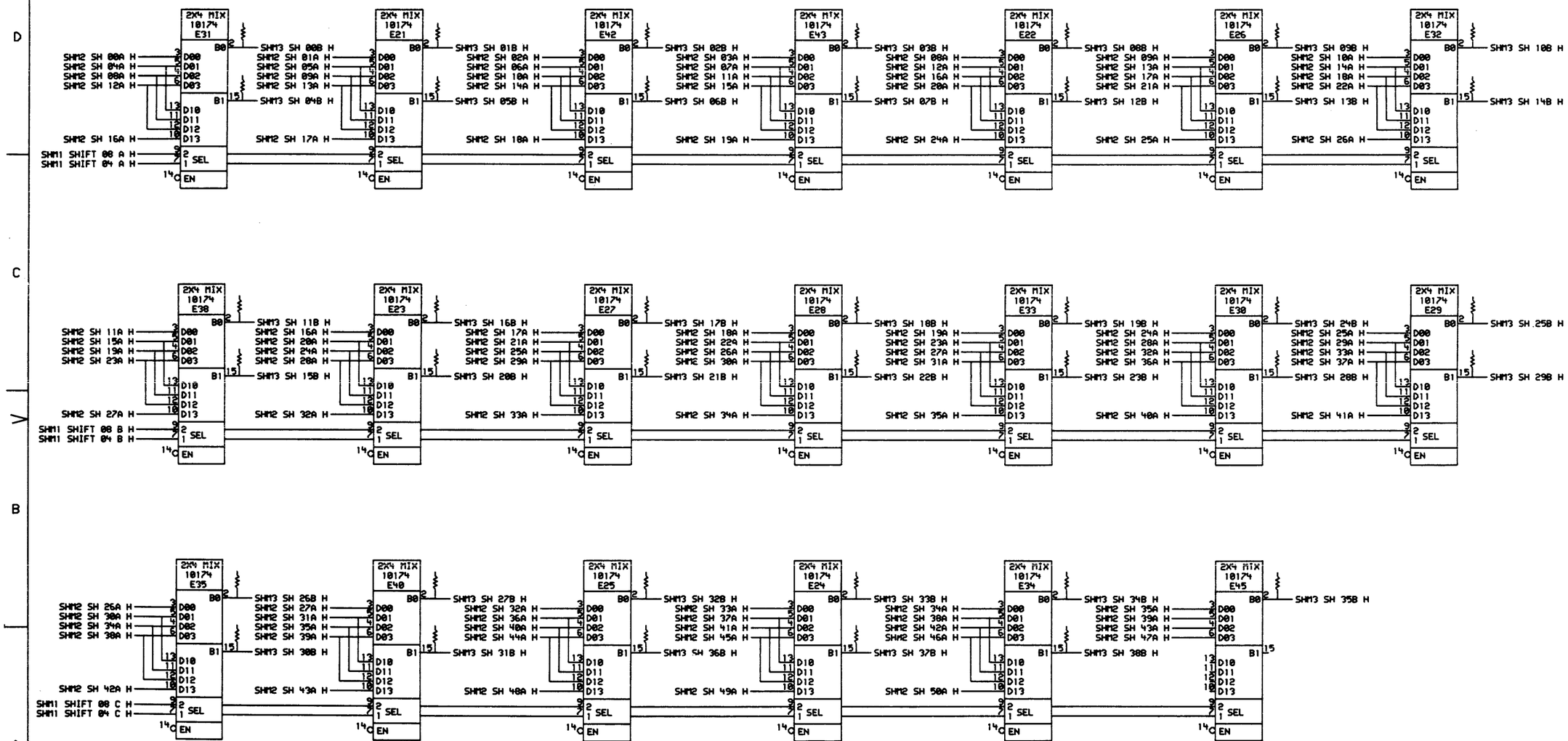

3 OF 5

"THIS DRAWING AND SPECIFICATIONS, HEREIN, ARE THE PROPERTY OF DIGITAL EQUIPMENT CORPORATION AND SHALL NOT BE REPRODUCED OR COPIED OR USED IN WHOLE OR IN PART AS THE BASIS FOR THE MANUFACTURE OR SALE OF ITEMS WITHOUT WRITTEN PERMISSION.
COPYRIGHT © 1976, DIGITAL EQUIPMENT CORPORATION"

REVISIONS		
CHK	CHANGE NO.	REV

digital

DRN. J. Crosby DATE 28-SEP-76 ENG. Tom Eggers DATE 23Sep76
CHK'D Tom Eggers DATE 23Sep76 BOARD LOCATION: 4AF46
SHM3EA.RLS(4,161) 19-SEP-76 12:04 SHEET 1 OF 1 NEXT HIGHER ASSEMBLY:
FIRST USED ON OPTION/MODEL: KL10 B-DD-M8540-0

TITLE: SHIFT MATRIX SHIFT 4,8

SIZE	CODE	NUMBER	REV.
D	CS	M8540-0-SHM3	

339

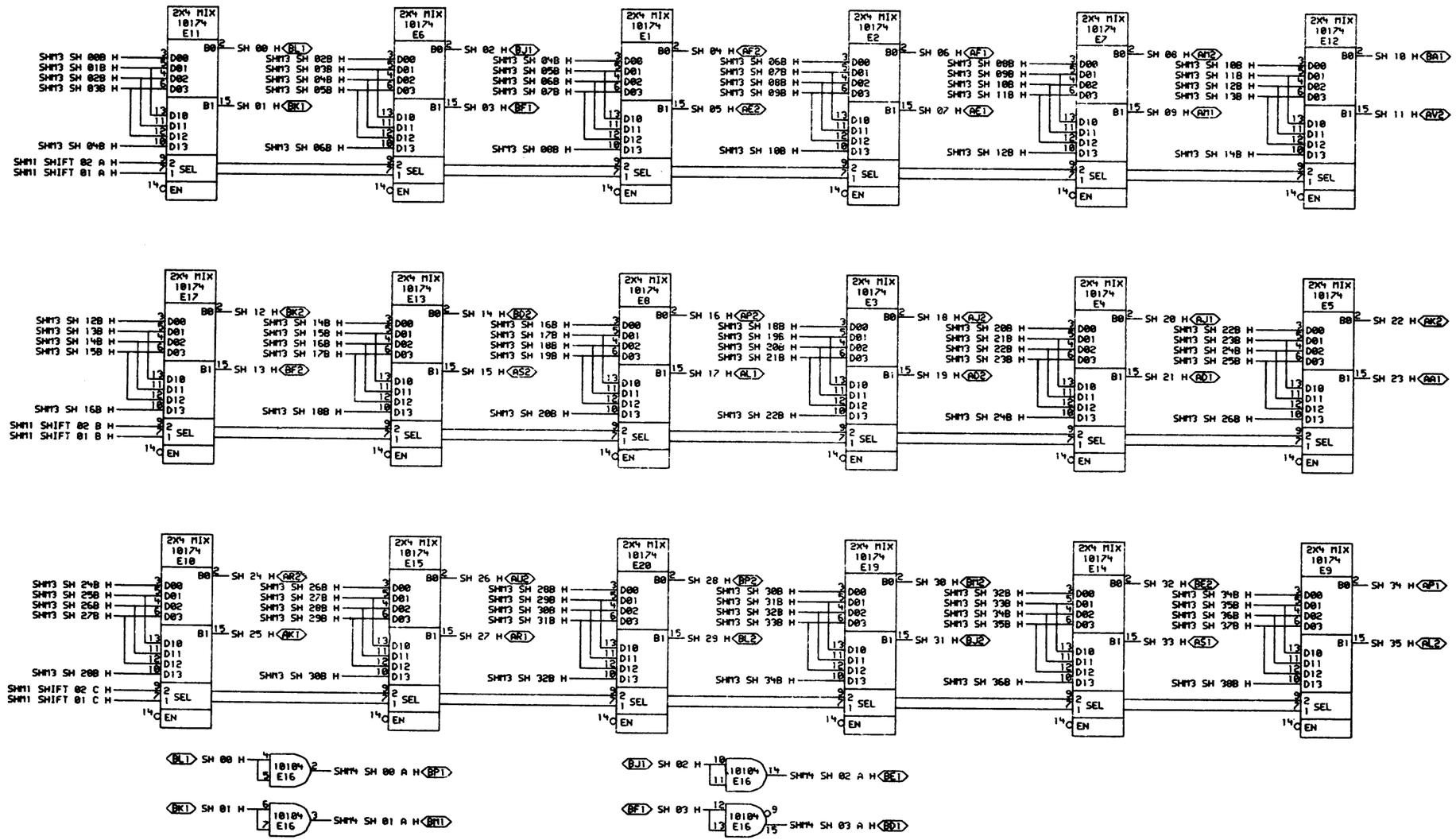

"THIS DRAWING AND SPECIFICATIONS, HEREIN, ARE THE PROPERTY OF DIGITAL EQUIPMENT CORPORATION AND SHALL NOT BE REPRODUCED OR COPIED OR USED IN WHOLE OR IN PART AS THE BASIS FOR THE MANUFACTURE OR SALE OF ITEMS WITHOUT WRITTEN PERMISSION.
COPYRIGHT © 1976, DIGITAL EQUIPMENT CORPORATION"

REVISIONS		
CHK	CHANGE NO.	REV

digital

DRN. [illegible] DATE 20-SEP-76
CHK'D [illegible] DATE 23-Sept-76
EMG [illegible] DATE 23-Sept-76
SHM4EA.RLS(4,161) 19-SEP-76 12:12
BOARD LOCATION: 4A46
SHEET 1 OF 1
NEXT HIGHER ASSEMBLY: B-DD-M8540-0
FIRST USED ON OPTION/MODEL: KL10

TITLE: SHIFT MATRIX SHIFT 1,2

SIZE	CODE	NUMBER	REV.
D	CS	M8540-0-SHM4	

340

MR

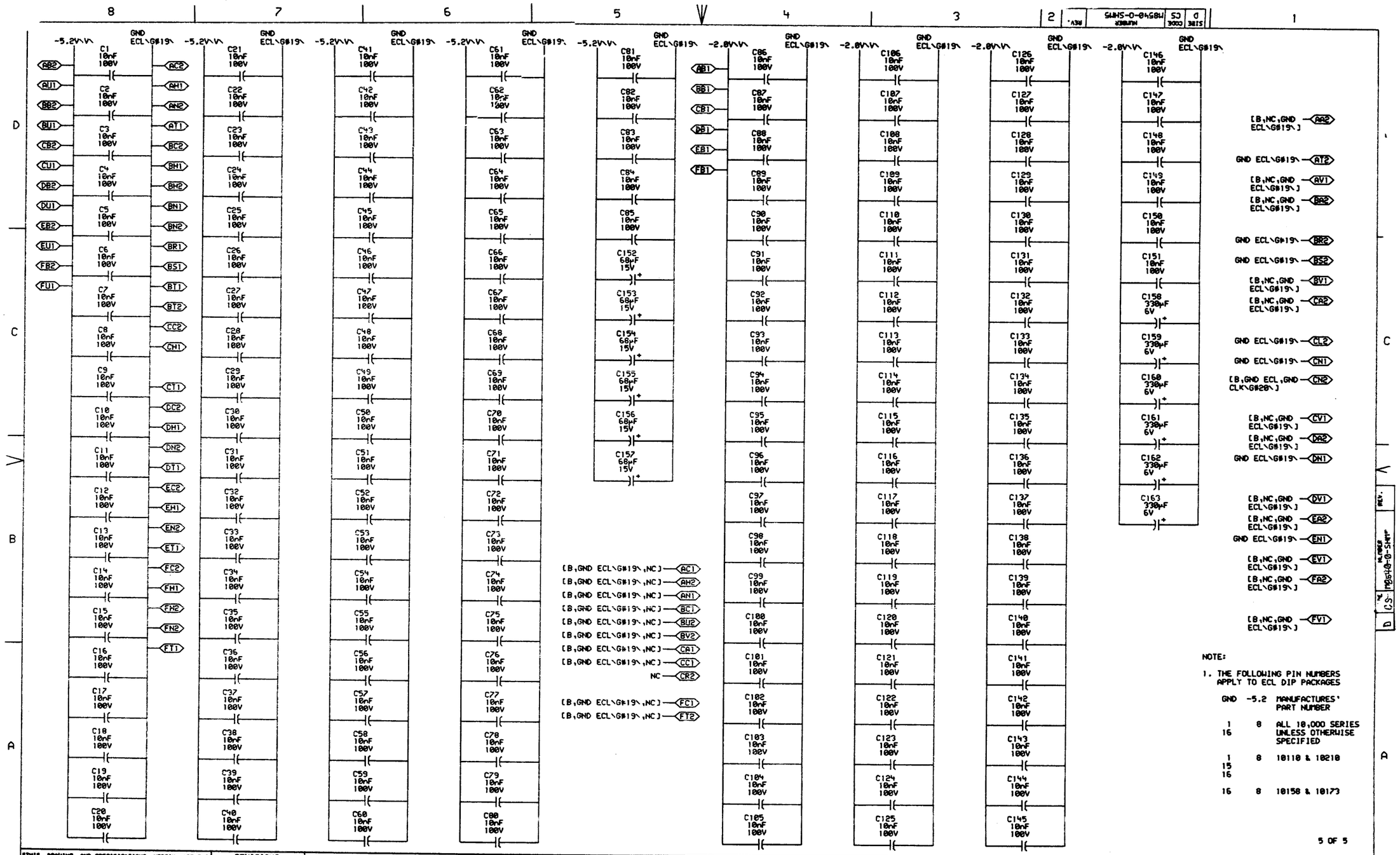
-5.2V\V\
GND ECL\G#19\
-2.0V\V\
C1 10nF 100V
C2 10nF 100V
C3 10nF 100V
C4 10nF 100V
C5 10nF 100V
C6 10nF 100V
C7 10nF 100V
C8 10nF 100V
C9 10nF 100V
C10 10nF 100V
C11 10nF 100V
C12 10nF 100V
C13 10nF 100V
C14 10nF 100V
C15 10nF 100V
C16 10nF 100V
C17 10nF 100V
C18 10nF 100V
C19 10nF 100V
C20 10nF 100V
C21 10nF 100V
C22 10nF 100V
C23 10nF 100V
C24 10nF 100V
C25 10nF 100V
C26 10nF 100V
C27 10nF 100V
C28 10nF 100V
C29 10nF 100V
C30 10nF 100V
C31 10nF 100V
C32 10nF 100V
C33 10nF 100V
C34 10nF 100V
C35 10nF 100V
C36 10nF 100V
C37 10nF 100V
C38 10nF 100V
C39 10nF 100V
C40 10nF 100V
C41 10nF 100V
C42 10nF 100V
C43 10nF 100V
C44 10nF 100V
C45 10nF 100V
C46 10nF 100V
C47 10nF 100V
C48 10nF 100V
C49 10nF 100V
C50 10nF 100V
C51 10nF 100V
C52 10nF 100V
C53 10nF 100V
C54 10nF 100V
C55 10nF 100V
C56 10nF 100V
C57 10nF 100V
C58 10nF 100V
C59 10nF 100V
C60 10nF 100V
C61 10nF 100V
C62 10nF 100V
C63 10nF 100V
C64 10nF 100V
C65 10nF 100V
C66 10nF 100V
C67 10nF 100V
C68 10nF 100V
C69 10nF 100V
C70 10nF 100V
C71 10nF 100V
C72 10nF 100V
C73 10nF 100V
C74 10nF 100V
C75 10nF 100V
C76 10nF 100V
C77 10nF 100V
C78 10nF 100V
C79 10nF 100V
C80 10nF 100V
C81 10nF 100V
C82 10nF 100V
C83 10nF 100V
C84 10nF 100V
C85 10nF 100V
C152 68µF 15V
C153 68µF 15V
C154 68µF 15V
C155 68µF 15V
C156 68µF 15V
C157 68µF 15V
C86 10nF 100V
C87 10nF 100V
C88 10nF 100V
C89 10nF 100V
C90 10nF 100V
C91 10nF 100V
C92 10nF 100V
C93 10nF 100V
C94 10nF 100V
C95 10nF 100V
C96 10nF 100V
C97 10nF 100V
C98 10nF 100V
C99 10nF 100V
C100 10nF 100V
C101 10nF 100V
C102 10nF 100V
C103 10nF 100V
C104 10nF 100V
C105 10nF 100V
C106 10nF 100V
C107 10nF 100V
C108 10nF 100V
C109 10nF 100V
C110 10nF 100V
C111 10nF 100V
C112 10nF 100V
C113 10nF 100V
C114 10nF 100V
C115 10nF 100V
C116 10nF 100V
C117 10nF 100V
C118 10nF 100V
C119 10nF 100V
C120 10nF 100V
C121 10nF 100V
C122 10nF 100V
C123 10nF 100V
C124 10nF 100V
C125 10nF 100V
C126 10nF 100V
C127 10nF 100V
C128 10nF 100V
C129 10nF 100V
C130 10nF 100V
C131 10nF 100V
C132 10nF 100V
C133 10nF 100V
C134 10nF 100V
C135 10nF 100V
C136 10nF 100V
C137 10nF 100V
C138 10nF 100V
C139 10nF 100V
C140 10nF 100V
C141 10nF 100V
C142 10nF 100V
C143 10nF 100V
C144 10nF 100V
C145 10nF 100V
C146 10nF 100V
C147 10nF 100V
C148 10nF 100V
C149 10nF 100V
C150 10nF 100V
C151 10nF 100V
C158 330µF 6V
C159 330µF 6V
C160 330µF 6V
C161 330µF 6V
C162 330µF 6V
C163 330µF 6V
AB2
AU1
BB2
BU1
CB2
CU1
DB2
DU1
EB2
EU1
FB2
FU1
AC2
AH1
AN2
AT1
BC2
BH1
BH2
BN1
BN2
BR1
BS1
BT1
BT2
CC2
CH1
CT1
DC2
DH1
DN2
DT1
EC2
EH1
EN2
ET1
FC2
FH1
FH2
FN2
FT1
AB1
BB1
CB1
DB1
EB1
FB1
[B,GND ECL\G#19\,NC] AC1
[B,GND ECL\G#19\,NC] AH2
[B,GND ECL\G#19\,NC] AN1
[B,GND ECL\G#19\,NC] BC1
[B,GND ECL\G#19\,NC] BU2
[B,GND ECL\G#19\,NC] BV2
[B,GND ECL\G#19\,NC] CA1
[B,GND ECL\G#19\,NC] CC1
NC CR2
[B,GND ECL\G#19\,NC] FC1
[B,GND ECL\G#19\,NC] FT2
[B,NC,GND ECL\G#19\] AA2
GND ECL\G#19\ AT2
[B,NC,GND ECL\G#19\] AV1
[B,NC,GND ECL\G#19\] BA2
GND ECL\G#19\ BR2
GND ECL\G#19\ BS2
[B,NC,GND ECL\G#19\] BV1
[B,NC,GND ECL\G#19\] CA2
GND ECL\G#19\ CL2
GND ECL\G#19\ CN1
[B,GND ECL,GND CLK\G#20\] CN2
[B,NC,GND ECL\G#19\] CV1
[B,NC,GND ECL\G#19\] DA2
GND ECL\G#19\ DN1
[B,NC,GND ECL\G#19\] DV1
[B,NC,GND ECL\G#19\] EA2
GND ECL\G#19\ EN1
[B,NC,GND ECL\G#19\] EV1
[B,NC,GND ECL\G#19\] FA2
[B,NC,GND ECL\G#19\] FV1
NOTE:
1. THE FOLLOWING PIN NUMBERS APPLY TO ECL DIP PACKAGES
GND -5.2 MANUFACTURES' PART NUMBER
1 8 ALL 10,000 SERIES
16 UNLESS OTHERWISE SPECIFIED
1 8 10110 & 10210
15
16
16 8 10158 & 10173
5 OF 5
"THIS DRAWING AND SPECIFICATIONS, HEREIN, ARE THE PROPERTY OF DIGITAL EQUIPMENT CORPORATION AND SHALL NOT BE REPRODUCED OR COPIED OR USED IN WHOLE OR IN PART AS THE BASIS FOR THE MANUFACTURE OR SALE OF ITEMS WITHOUT WRITTEN PERMISSION.
COPYRIGHT © 1976, DIGITAL EQUIPMENT CORPORATION"
REVISIONS
CHK CHANGE NO. REV
digital
DRN. 28-SEP-76
CHKD.
ENG. DATE
BOARD LOCATION: 4AF46
SHEET 1 OF 1
SHM5EA.RLS(4,161) 31-AUG-76 16:56
FIRST USED ON OPTION/MODEL: KL10
NEXT HIGHER ASSEMBLY: B-DD-M8540-0
TITLE: SHIFT MATRIX POWER, GND, CAPS
SIZE D CODE CS NUMBER M8540-0-SHM5 REV.
341

RESISTOR LOC(PIN)	SHOWN ON DRW#	REF	VALUE	TERMINATES SIGNAL
R99(1)	SH11	C6	68Ω	%E36(14)
R100(1)	SHM1	C6	68Ω	%E36(3)
R153(1)	SHM1	C6	68Ω	%E46(14)
R152(1)	SHM1	D6	68Ω	%E46(15)
R77(1)	SHM1	D6	68Ω	%E46(2)
R73(1)	SHM1	D6	68Ω	%E46(3)
R40(1)	SHM1	A3	68Ω	%E77(2)
R161(1)	SHM1	A3	68Ω	%E85(14)
R00(1)	SHM2	D7	68Ω	AR 00 B H
R150(1)	SHM2	D6	68Ω	AR 01 B H
R125(1)	SHM2	D5	68Ω	AR 02 B H
R130(1)	SHM2	D4	68Ω	AR 03 B H
R70(1)	SHM2	D2	68Ω	AR 04 B H
R03(1)	SHM2	D1	68Ω	AR 05 B H
R00(1)	SHM2	C7	68Ω	AR 06 B H
R121(1)	SHM2	C6	68Ω	AR 07 B H
R26(1)	SHM2	C5	68Ω	AR 08 B H
R30(1)	SHM2	C4	68Ω	AR 09 B H
R34(1)	SHM2	C2	68Ω	AR 10 B H
R93(1)	SHM2	C1	68Ω	AR 11 B H
R45(1)	SHM2	B7	68Ω	AR 12 B H
R49(1)	SHM2	B6	68Ω	AR 13 B H
R38(1)	SHM2	B5	68Ω	AR 14 B H
R43(1)	SHM2	B4	68Ω	AR 15 B H
R115(1)	SHM2	D7	68Ω	AR 16 B H
R166(1)	SHM2	D6	68Ω	AR 17 B H
R160(1)	SHM2	D5	68Ω	AR 18 B H
R165(1)	SHM2	D4	68Ω	AR 19 B H
R01(1)	SHM2	D2	68Ω	AR 20 B H
R119(1)	SHM2	D1	68Ω	AR 21 B H
R123(1)	SHM2	C7	68Ω	AR 22 B H
R122(1)	SHM2	C6	68Ω	AR 23 B H
R76(1)	SHM2	C5	68Ω	AR 24 B H
R91(1)	SHM2	C4	68Ω	AR 25 B H
R06(1)	SHM2	C2	68Ω	AR 26 B H
R92(1)	SHM2	C1	68Ω	AR 27 B H
R24(1)	SHM2	B7	68Ω	AR 28 B H
R27(1)	SHM2	B6	68Ω	AR 29 B H
R31(1)	SHM2	B5	68Ω	AR 30 B H
R42(1)	SHM2	B4	68Ω	AR 31 B H

RESISTOR LOC(PIN)	SHOWN ON DRW#	REF	VALUE	TERMINATES SIGNAL
R159(1)	SHM2	D7	68Ω	AR 32 B H
R155(1)	SHM2	D6	68Ω	AR 33 B H
R163(1)	SHM2	D5	68Ω	AR 34 B H
R164(1)	SHM2	D4	68Ω	AR 35 B H
R04(1)	SHM2	D2	68Ω	ARX 00 A H
R110(1)	SHM2	D1	68Ω	ARX 01 A H
R124(1)	SHM2	C7	68Ω	ARX 02 H
R127(1)	SHM2	C6	68Ω	ARX 03 H
R72(1)	SHM2	C5	68Ω	ARX 04 H
R71(1)	SHM2	C4	68Ω	ARX 05 H
R07(1)	SHM2	C2	68Ω	ARX 06 A H
R90(1)	SHM2	C1	68Ω	ARX 07 A H
R20(1)	SHM2	B7	68Ω	ARX 08 H
R32(1)	SHM2	B6	68Ω	ARX 09 H
R37(1)	SHM2	B5	68Ω	ARX 10 H
R46(1)	SH12	B4	68Ω	ARX 11 H
R157(1)	SHM2	D7	68Ω	ARX 12 A H
R154(1)	SHM2	D6	68Ω	ARX 13 A H
R207(1)	SHM2	D5	68Ω	ARX 14 H
R212(1)	SHM2	D4	68Ω	ARX 15 H
R79(1)	SHM2	D2	68Ω	ARX 16 H
R117(1)	SHM2	D1	68Ω	ARX 17 H
R120(1)	SHM2	C7	68Ω	ARX 18 A H
R126(1)	SHM2	C6	68Ω	ARX 19 A H
R75(1)	SHM2	C5	68Ω	ARX 20 H
R02(1)	SHM2	C4	68Ω	ARX 21 H
R05(1)	SHM2	C2	68Ω	ARX 22 H
R09(1)	SHM2	C1	68Ω	ARX 23 H
R25(1)	SHM2	B7	68Ω	ARX 24 A H
R29(1)	SHM2	B6	68Ω	ARX 25 A H
R33(1)	SHM2	B5	68Ω	ARX 26 H
R41(1)	SHM2	B4	68Ω	ARX 27 H
R202(1)	SHM2	B2	68Ω	ARX 28 H
R203(1)	SHM2	B2	68Ω	ARX 29 H
R201(1)	SHM2	B1	68Ω	ARX 30 A H
R208(1)	SHM2	B1	68Ω	ARX 31 A H
R116(1)	SHM2	A7	68Ω	ARX 32 H
R114(1)	SHM2	A7	68Ω	ARX 33 H
R113(1)	SHM2	A6	68Ω	ARX 34 H
R111(1)	SHM2	A6	68Ω	ARX 35 H

RESISTOR LOC(PIN)	SHOWN ON DRW#	REF	VALUE	TERMINATES SIGNAL
R40(1)	SHM1	B3	68Ω	CON AR 36 H
R209(1)	SHM1	B4	68Ω	CON ARX 36 H
R190(1)	SHM1	C7	68Ω	CRAM SH-ARMM SEL 1 A H
R189(1)	SHM1	C7	68Ω	CRAM SH-ARMM SEL 2 A H
R193(1)	SHM1	B6	68Ω	IR TEST SATISFIED H
R192(1)	SHM1	C7	68Ω	SCD2 SC .GE. 36 H
R190(1)	SHM1	D7	68Ω	SCD2 SC 04 H
R199(1)	SHM1	D7	68Ω	SCD2 SC 05 H
R194(1)	SHM1	D7	68Ω	SCD2 SC 06 H
R195(1)	SHM1	C7	68Ω	SCD2 SC 07 H
R188(1)	SHM1	C7	68Ω	SCD2 SC 08 H
R191(1)	SHM1	C7	68Ω	SCD2 SC 09 H
R196(1)	SHM1	C7	68Ω	SCD2 SC 36 TO 63 H
R35(1)	SHM1	C4	68Ω	SHM1 AR PAR A H
R39(1)	SHM1	C3	68Ω	SHM1 AR PAR B H
R36(1)	SHM1	C1	68Ω	SHM1 AR PAR C H
R204(1)	SHM1	D4	68Ω	SHM1 ARX PAR A H
R205(1)	SHM1	D3	68Ω	SHM1 ARX PAR B H
R206(1)	SHM1	D1	68Ω	SHM1 ARX PAR C H
R200(1)	SHM1	A7	68Ω	SHM1 INSTR FORMAT H
R176(1)	SHM1	C5	68Ω	SHM1 SHIFT 01 A H
R141(1)	SHM1	C5	68Ω	SHM1 SHIFT 01 B H
R0(1)	SHM1	C5	68Ω	SHM1 SHIFT 01 C H
R175(1)	SHM1	C5	68Ω	SHM1 SHIFT 02 A H
R137(1)	SHM1	C5	68Ω	SHM1 SHIFT 02 B H
R9(1)	SHM1	C5	68Ω	SHM1 SHIFT 02 C H
R144(1)	SHM1	C5	68Ω	SHM1 SHIFT 04 A H
R17(1)	SHM1	C5	68Ω	SHM1 SHIFT 04 B H
R67(1)	SHM1	C5	68Ω	SHM1 SHIFT 04 C H
R142(1)	SHM1	D5	68Ω	SHM1 SHIFT 08 A H
R14(1)	SHM1	D5	68Ω	SHM1 SHIFT 08 B H
R63(1)	SHM1	D5	68Ω	SHM1 SHIFT 08 C H
R129(1)	SHM1	D5	68Ω	SHM1 SHIFT 16 A H
R47(1)	SHM1	D5	68Ω	SHM1 SHIFT 16 B H
R211(1)	SHM1	D5	68Ω	SHM1 SHIFT 16 C H
R128(1)	SHM1	D5	68Ω	SHM1 SHIFT 32 A H
R44(1)	SHM1	D5	68Ω	SHM1 SHIFT 32 B H
R210(1)	SHM1	D5	68Ω	SHM1 SHIFT 32 C H
R74(1)	SHM1	C5	68Ω	SHM1 SHIFT 36 H
R101(1)	SHM1	B5	68Ω	SHM1 SHIFT 50 H

RESISTOR LOC(PIN)	SHOWN ON DRW#	REF	VALUE	TERMINATES SIGNAL
R197(1)	SHM1	C7	68Ω	-SHM1 SHIFT INH H
R107(1)	SHM2	D7	68Ω	SHM2 SH 00A H
R170(1)	SHM2	D6	68Ω	SHM2 SH 01A H
R156(1)	SHM2	D5	68Ω	SHM2 SH 02A H
R112(1)	SHM2	D4	68Ω	SHM2 SH 03A H
R104(1)	SHM2	D2	68Ω	SHM2 SH 04A H
R100(1)	SHM2	D1	68Ω	SHM2 SH 05A H
R151(1)	SHM2	C7	68Ω	SHM2 SH 06A H
R100(1)	SHM2	C6	68Ω	SHM2 SH 07A H
R145(1)	SHM2	C5	68Ω	SHM2 SH 08A H
R179(1)	SHM2	C4	68Ω	SHM2 SH 09A H
R150(1)	SHM2	C2	68Ω	SHM2 SH 10A H
R109(1)	SHM2	C1	68Ω	SHM2 SH 11A H
R140(1)	SHM2	B7	68Ω	SHM2 SH 12A H
R102(1)	SHM2	B6	68Ω	SHM2 SH 13A H
R146(1)	SHM2	B5	68Ω	SHM2 SH 14A H
R110(1)	SHM2	B4	68Ω	SHM2 SH 15A H
R105(1)	SHM2	D7	68Ω	SHM2 SH 16A H
R101(1)	SHM2	D6	68Ω	SHM2 SH 17A H
R103(1)	SHM2	D5	68Ω	SHM2 SH 18A H
R107(1)	SHM2	D4	68Ω	SHM2 SH 19A H
R139(1)	SHM2	D2	68Ω	SHM2 SH 20A H
R106(1)	SHM2	D1	68Ω	SHM2 SH 21A H
R148(1)	SHM2	C7	68Ω	SHM2 SH 22A H
R102(1)	SHM2	C6	68Ω	SHM2 SH 23A H
R143(1)	SHM2	C5	68Ω	SHM2 SH 24A H
R103(1)	SHM2	C4	68Ω	SHM2 SH 25A H
R149(1)	SHM2	C2	68Ω	SHM2 SH 26A H
R106(1)	SHM2	C1	68Ω	SHM2 SH 27A H
R90(1)	SHM2	B7	68Ω	SHM2 SH 28A H
R147(1)	SHM2	B6	68Ω	SHM2 SH 29A H
R104(1)	SHM2	B5	68Ω	SHM2 SH 30A H
R105(1)	SHM2	B4	68Ω	SHM2 SH 31A H
R16(1)	SHM2	B2	68Ω	SHM2 SH 32A H
R66(1)	SHM2	B2	68Ω	SHM2 SH 33A H
R15(1)	SHM2	B1	68Ω	SHM2 SH 34A H
R22(1)	SHM2	B1	68Ω	SHM2 SH 35A H
R11(1)	SHM2	B7	68Ω	SHM2 SH 36A H
R68(1)	SHM2	A7	68Ω	SHM2 SH 37A H
R20(1)	SHM2	B6	68Ω	SHM2 SH 38A H

NOTE:

1. ALL TERMINATORS HAVE PIN TWO CONNECTED TO -2.0V AND ARE 5% 1/4WATT UNLESS OTHERWISE SPECIFIED
2. ENTRIES ARE SORTED BY SIGNAL NAME
3. % INDICATES OUTPUT OF DIP LOC AND () INDICATES PIN NUMBER

"THIS DRAWING AND SPECIFICATIONS, HEREIN, ARE THE PROPERTY OF DIGITAL EQUIPMENT CORPORATION AND SHALL NOT BE REPRODUCED OR COPIED OR USED IN WHOLE OR IN PART AS THE BASIS FOR THE MANUFACTURE OR SALE OF ITEMS WITHOUT WRITTEN PERMISSION. COPYRIGHT © 1976, DIGITAL EQUIPMENT CORPORATION"

REVISIONS		
CHK	CHANGE NO.	REV

digital

DRN. C Smith DATE 19-SEP-76 ENG. Tom Sagre DATE 23Sep76
CHK'D Tom Sagre DATE 23Sep76 BOARD LOCATION: SHEET 1 OF 2

M8540.RLS(4,161) 19-SEP-76 12:48 NEXT HIGHER ASSEMBLY: B-DD-M8540-0

FIRST USED ON OPTION/MODEL: KL10

TITLE: SHIFT MATRIX TERMINATORS

SIZE	CODE	NUMBER	REV.
D	CS	M8540-0-RES	

342

MR

RESISTOR LOC(PIN)	SHOWN ON DRW#	REF	VALUE	TERMINATES SIGNAL
R19(1)	SHM2	A6	68Ω	SHM2 SH 39A H
R12(1)	SHM2	A4	68Ω	SHM2 SH 40A H
R64(1)	SHM2	A4	68Ω	SHM2 SH 41A H
R18(1)	SHM2	A4	68Ω	SHM2 SH 42A H
R23(1)	SHM2	A4	68Ω	SHM2 SH 43A H
R10(1)	SHM2	A2	68Ω	SHM2 SH 44A H
R60(1)	SHM2	A2	68Ω	SHM2 SH 45A H
R69(1)	SHM2	A2	68Ω	SHM2 SH 46A H
R21(1)	SHM2	A2	68Ω	SHM2 SH 47A H
R13(1)	SHM2	A1	68Ω	SHM2 SH 48A H
R65(1)	SHM2	A1	68Ω	SHM2 SH 49A H
R70(1)	SHM2	A1	68Ω	SHM2 SH 50A H
R177(1)	SHM3	D7	68Ω	SHM3 SH 00B H
R173(1)	SHM3	D6	68Ω	SHM3 SH 01B H
R174(1)	SHM3	D5	68Ω	SHM3 SH 02B H
R167(1)	SHM3	D4	68Ω	SHM3 SH 03B H
R168(1)	SHM3	D7	68Ω	SHM3 SH 04B H
R169(1)	SHM3	D6	68Ω	SHM3 SH 05B H
R172(1)	SHM3	D5	68Ω	SHM3 SH 06B H
R171(1)	SHM3	D4	68Ω	SHM3 SH 07B H
R170(1)	SHM3	D3	68Ω	SHM3 SH 08B H
R132(1)	SHM3	D2	68Ω	SHM3 SH 09B H
R133(1)	SHM3	D1	68Ω	SHM3 SH 10B H
R131(1)	SHM3	C7	68Ω	SHM3 SH 11B H
R134(1)	SHM3	D3	68Ω	SHM3 SH 12B H
R136(1)	SHM3	D2	68Ω	SHM3 SH 13B H
R97(1)	SHM3	D1	68Ω	SHM3 SH 14B H
R135(1)	SHM3	C7	68Ω	SHM3 SH 15B H
R138(1)	SHM3	C6	68Ω	SHM3 SH 16B H
R94(1)	SHM3	C5	68Ω	SHM3 SH 17B H
R95(1)	SHM3	C4	68Ω	SHM3 SH 18B H
R96(1)	SHM3	C3	68Ω	SHM3 SH 19B H
R50(1)	SHM3	C6	68Ω	SHM3 SH 20B H
R51(1)	SHM3	C5	68Ω	SHM3 SH 21B H
R4(1)	SHM3	C4	68Ω	SHM3 SH 22B H
R3(1)	SHM3	C3	68Ω	SHM3 SH 23B H
R52(1)	SHM3	C2	68Ω	SHM3 SH 24B H
R2(1)	SHM3	C1	68Ω	SHM3 SH 25B H
R5(1)	SHM3	B7	68Ω	SHM3 SH 26B H
R1(1)	SHM3	B6	68Ω	SHM3 SH 27B H

RESISTOR LOC(PIN)	SHOWN ON DRW#	REF	VALUE	TERMINATES SIGNAL
R6(1)	SHM3	C2	68Ω	SHM3 SH 28B H
R7(1)	SHM3	C1	68Ω	SHM3 SH 29B H
R61(1)	SHM3	A7	68Ω	SHM3 SH 30B H
R62(1)	SHM3	A6	68Ω	SHM3 SH 31B H
R58(1)	SHM3	B5	68Ω	SHM3 SH 32B H
R59(1)	SHM3	B4	68Ω	SHM3 SH 33B H
R57(1)	SHM3	B3	68Ω	SHM3 SH 34B H
R56(1)	SHM3	B2	68Ω	SHM3 SH 35B H
R53(1)	SHM3	A5	68Ω	SHM3 SH 36B H
R55(1)	SHM3	A4	68Ω	SHM3 SH 37B H
R54(1)	SHM3	A3	68Ω	SHM3 SH 38B H

NOTE:

1. ALL TERMINATORS HAVE PIN TWO CONNECTED TO -2.0V AND ARE 5% 1/4WATT UNLESS OTHERWISE SPECIFIED
2. ENTRIES ARE SORTED BY SIGNAL NAME
3. % INDICATES OUTPUT OF DIP LOC AND () INDICATES PIN NUMBER

"THIS DRAWING AND SPECIFICATIONS, HEREIN, ARE THE PROPERTY OF DIGITAL EQUIPMENT CORPORATION AND SHALL NOT BE REPRODUCED OR COPIED OR USED IN WHOLE OR IN PART AS THE BASIS FOR THE MANUFACTURE OR SALE OF ITEMS WITHOUT WRITTEN PERMISSION. COPYRIGHT © 1976, DIGITAL EQUIPMENT CORPORATION"

REVISIONS		
CHK	CHANGE NO.	REV

DRN. C. Smith DATE 19-SEP-76
CHK'D DATE
M8540.RLS(4,161) 19-SEP-76 12:48
FIRST USED ON OPTION/MODEL: KL10
NEXT HIGHER ASSEMBLY: B-D 8540-0
BOARD LOCATION: SHEET 2 OF 2

TITLE: SHIFT MATRIX TERMINATORS

SIZE	CODE	NUMBER	REV.
D	CS	M8540-0-RES	

343

SIZE	CODE	NUMBER	REV.
B	DD	M8541-Ø	

DRAWING NO.	NO. OF SHTS	PART NO.	DESCRIPTION	REVISIONS
	-		MODULE REVISION	A
D-UA-M8541-Ø-Ø	5		CONTROL RAM ADDRESS	-
D-CS-M8541-Ø-CRA1	1		CONTROL RAM ADR CR ADR ØØ-Ø6	-
D-CS-M8541-Ø-CRA2	1		CONTROL RAM ADR CR ADR Ø7-1Ø	-
D-CS-M8541-Ø-CRA3	1		CONTROL RAM ADR REGISTERS	-
D-CS-M8541-Ø-CRA4	1		CONTROL RAM ADR SBR STACK	-
D-CS-M8541-Ø-CRA5	1		CONTROL RAM ADR 2K RAM & DIAG.	-
D-CS-M8541-Ø-CRA6	1		CONTROL RAM ADR POWER, GND, CAPS	-
D-CS-M8541-Ø-RES	2		CONTROL RAM ADR TERMINATORS	-
D-AH-M8541-Ø-5	4		CONTROL RAM ADDRESS	-
		5011887	ETCHED CIRCUIT BOARD	B
M8541-Ø-L			P.C. DESIGN DATA BASE	REF
M8541-Ø-PL			INSERTION P/L DATA BASE	REF
POO-M8541-ØØ			PROCESS SHEETS	REF

NOTES:

REVISIONS		
DATE	CHG NO.	REV

"THIS DRAWING AND SPECIFICATIONS, HEREIN, ARE THE PROPERTY OF DIGITAL EQUIPMENT CORPORATION AND SHALL NOT BE REPRODUCED OR COPIED OR USED IN WHOLE OR IN PART AS THE BASIS FOR THE MANUFACTURE OR SALE OF ITEMS WITHOUT WRITTEN PERMISSION.
COPYRIGHT ©1976, DIGITAL EQUIPMENT CORPORATION"

digital

USED ON OPTION/MODEL	
KL1Ø	

DRN.	R. F. Lucier	2 SEP 1976
CHK'D	R. W. Counter	2 Sept 76
ENG.	Tom Eggen	5 Oct 76
PROD.	Bill Cuky	15 Oct 76

TITLE: CONTROL RAM ADDRESS

SIZE	CODE	NUMBER	REV.
B	DD	M8541-Ø	

SHEET 1 OF 1

DRB 126 EN-01149-16-N176(325)

344

MR

THIS DRAWING AND SPECIFICATIONS, HEREIN, ARE THE PROPERTY OF DIGITAL EQUIPMENT CORPORATION AND SHALL NOT BE REPRODUCED OR COPIED OR USED IN WHOLE OR IN PART AS THE BASIS FOR THE MANUFACTURE OR SALE OF ITEMS WITHOUT WRITTEN PERMISSION.
COPYRIGHT © 1976 DIGITAL EQUIPMENT CORPORATION

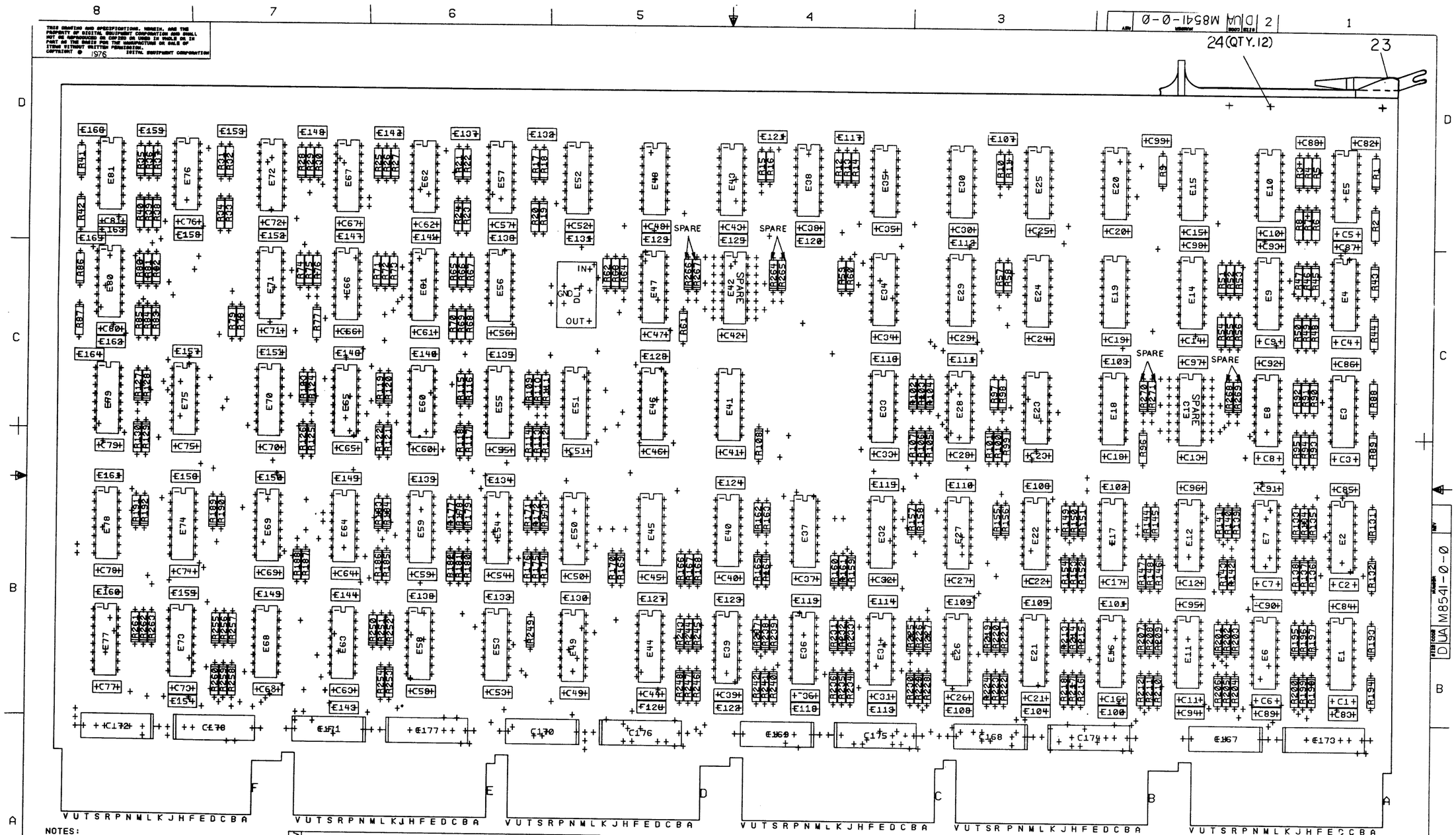

NOTES:

CHANGE NO	REV

SIGNATURES	DATE
DRN. M. Pelkauskas	20FEB76
CHK'D. R. Lowder	20SEP76
ENG. Tom Tyger	5 Oct 76
PROJ. ENG. T. Tyger	5 Oct 76
PROD. Bill Bailey	15 Oct 76

digital

TITLE CONTROL RAM ADDRESS

SCALE 2 TO 1	SIZE	CODE	NUMBER	REV
SHT. 2 OF 5	D	UA	M8541-0-0	
ETCH REV FIRST USED ON KL10				

MR 1 MS# 30219

345

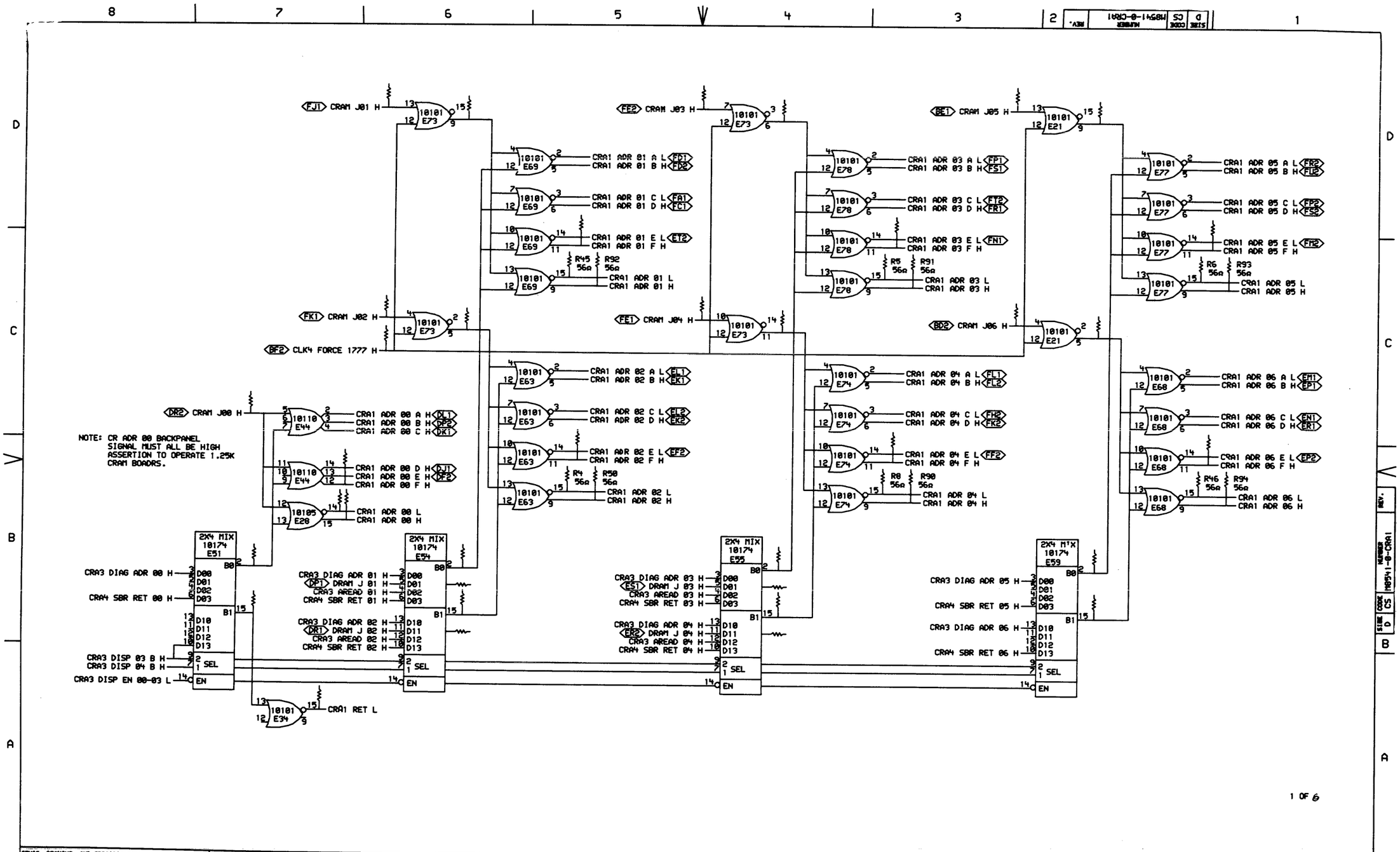

"THIS DRAWING AND SPECIFICATIONS, HEREIN, ARE THE PROPERTY OF DIGITAL EQUIPMENT CORPORATION AND SHALL NOT BE REPRODUCED OR COPIED OR USED IN WHOLE OR IN PART AS THE BASIS FOR THE MANUFACTURE OR SALE OF ITEMS WITHOUT WRITTEN PERMISSION. COPYRIGHT © 1976, DIGITAL EQUIPMENT CORPORATION"

REVISIONS		
CHK	CHANGE NO.	REV

digital

DRN. | DATE 28-SEP-76 | ENG. | DATE 2 Sept 76
CHKD. | DATE 2 Sept 76 | BOARD LOCATION: 4BF45
SHEET 1 OF 1
CRA1EA.RLSC4.161 | 17-SEP-76 22:21 | NEXT HIGHER ASSEMBLY:
FIRST USED ON OPTION/MODEL: KL10 | B-DD-M8541-0

TITLE: CONTROL RAM ADR CR ADR 00-06

SIZE	CODE	NUMBER	REV.
D	CS	M8541-0-CRA1	

346

MR

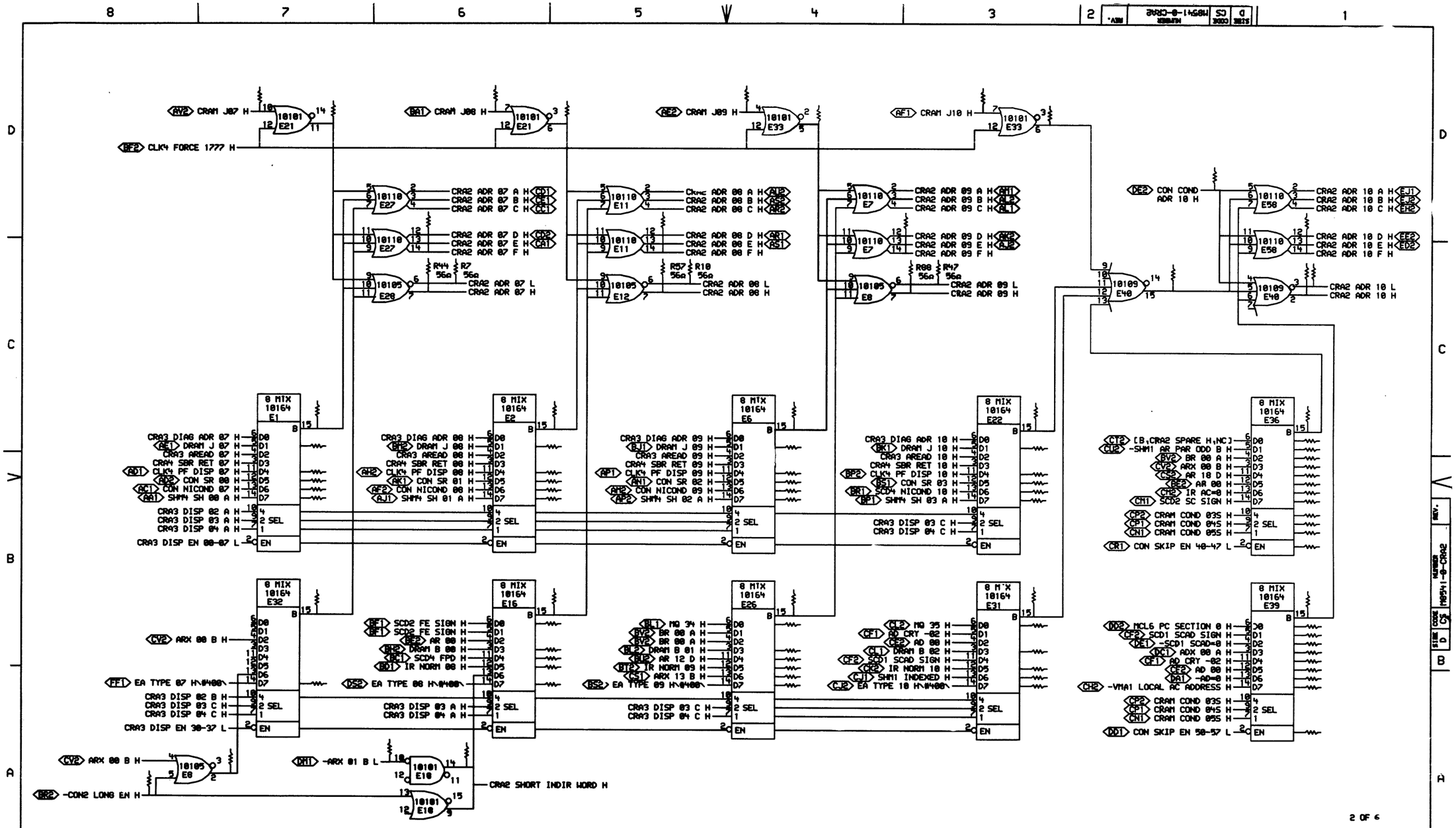

"THIS DRAWING AND SPECIFICATIONS, HEREIN, A E THE PROPERTY OF DIGITAL EQUIPMENT COR OATION AND SHALL NOT BE REPRODUCED OR COPIED OR USED IN WHOLE OR IN PART AS THE BASIS FOR THE MANUFACTURE OR SALE OF ITEMS WITHOUT WRITTEN PERMISSION. COPYRIGHT © 1976, DIGITAL EQUIPMENT CORPORATION"

REVISIONS		
CHK	CHANGE NO.	REV

digital

CRAREA.RLSC4.161 17-SEP-76 22:22

FIRST USED ON OPTION/MODEL: KL10

NEXT HIGHER A'SEMBLY: B-DD-M8541-0

BOARD LOCATION: 4AF45

SHEET 1 OF 1

TITLE: CONTROL RAM ADR CR ADR 07-10

SIZE	CODE	NUMBER	REV.
D	CS	M8541-0-CRA2	

347

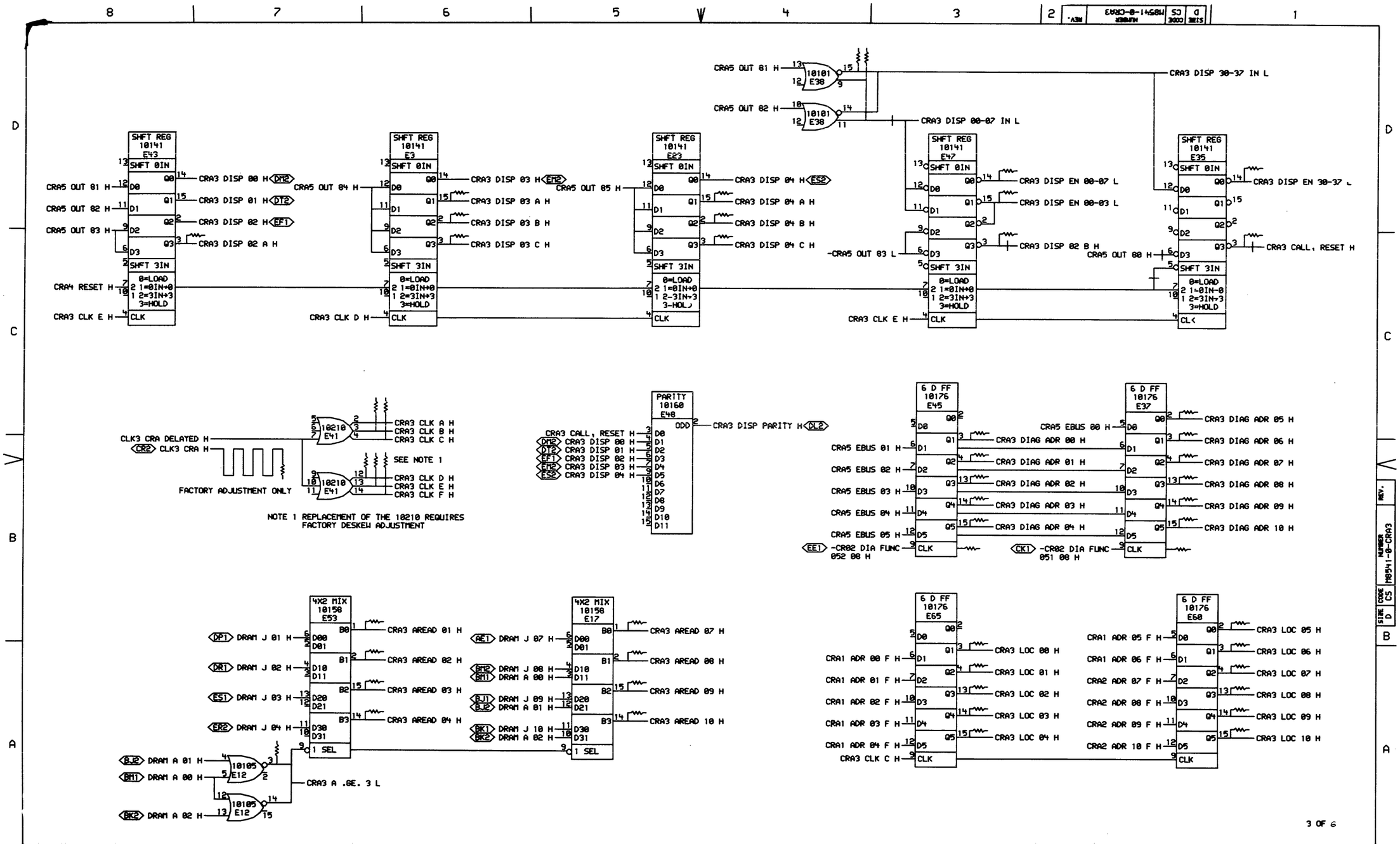

"THIS DRAWING AND SPECIFICATIONS, HEREIN, ARE THE PROPERTY OF DIGITAL EQUIPMENT CORPORATION AND SHALL NOT BE REPRODUCED OR COPIED OR USED IN WHOLE OR IN PART AS THE BASIS FOR THE MANUFACTURE OR SALE OF ITEMS WITHOUT WRITTEN PERMISSION. COPYRIGHT © 1976, DIGITAL EQUIPMENT CORPORATION"

REVISIONS		
CHK	C A GE NO.	REV

digital

DRN. | DATE 24-SEP-76 | ENG. | DATE | TITLE: CONTROL RAM ADR REGISTERS
CHKD. | DATE | BOARD LOCATION: 4AF45 | SHEET 1 OF 1

CRA3EA.RLS[4,161] 17-SEP-76 22:23 | NEXT HIGHER ASSEMBLY: B-DD-M8541-0

FIRST USED ON OPTION/MODEL: KL10

SIZE	CODE	NUMBER	REV.
D	CS	M8541-0-CRA3	

348

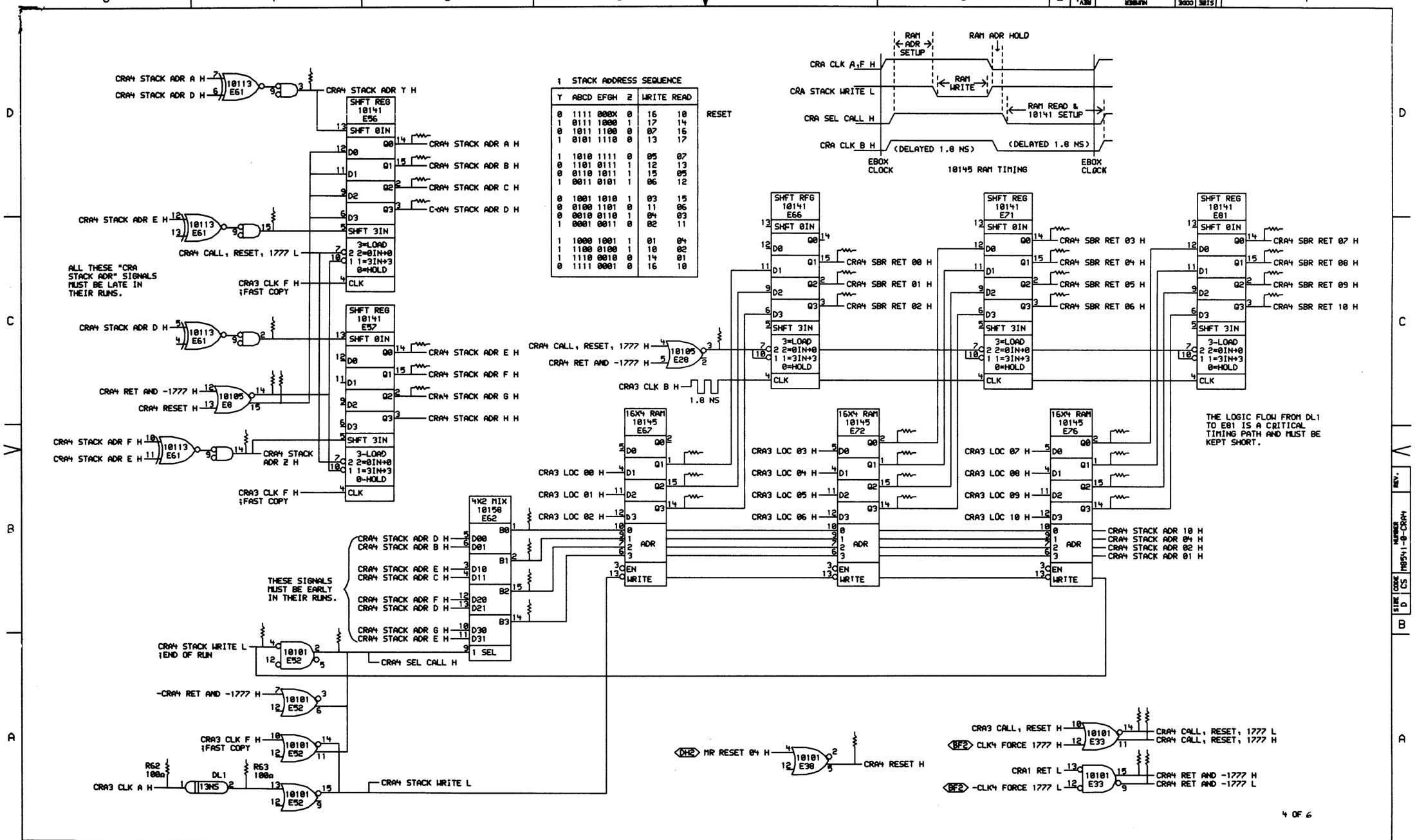

1 STACK ADDRESS SEQUENCE

Y	ABCD EFGH	Z	WRITE	READ
0	1111 000X	0	16	10
1	0111 1000	1	17	14
0	1011 1100	0	07	16
1	0101 1110	0	13	17
1	1010 1111	0	05	07
0	1101 0111	1	12	13
0	0110 1011	1	15	05
1	0011 0101	1	06	12
0	1001 1010	1	03	15
0	0100 1101	0	11	06
0	0010 0110	1	04	03
1	0001 0011	0	02	11
1	1000 1001	1	01	04
1	1100 0100	1	10	02
1	1110 0010	0	14	01
0	1111 0001	0	16	10

RESET

RAM ADR SETUP
RAM ADR HOLD
CRA CLK A,F H
CRA STACK WRITE L
RAM WRITE
CRA SEL CALL H
RAM READ & 10141 SETUP
CRA CLK B H
(DELAYED 1.8 NS)
(DELAYED 1.8 NS)
EBOX CLOCK
10145 RAM TIMING
EBOX CLOCK

"THIS DRAWING AND SPECIFICATIONS, HEREIN, ARE THE PROPERTY OF DIGITAL EQUIPMENT CORPORATION AND SHALL NOT BE REPRODUCED OR COPIED OR USED IN WHOLE OR IN PART AS THE BASIS FOR THE MANUFACTURE OR SALE OF ITEMS WITHOUT WRITTEN PERMISSION. COPYRIGHT © 1976, DIGITAL EQUIPMENT CORPORATION"

REVISIONS		
CHK	CHANGE NO.	REV

digital

DRN: J. Zachy DATE 20-SEP-76
CHKD: Tom Lyons DATE 23-Sept-76
ENG: Tom Lyons DATE 23 Sept 76
CRA4EA.RLS(4,161) 17-SEP-76 22:30
BOARD LOCATION: 4AF45
SHEET 1 OF 1
FIRST USED ON OPTION/MODEL: KL10
NEXT HIGHER ASSEM LY: B-DD-M8541-0

TITLE: CONTROL RAM ADR SBR STACK

SIZE	CODE	NUMBER	REV.
D	CS	M8541-0-CRA4	

349

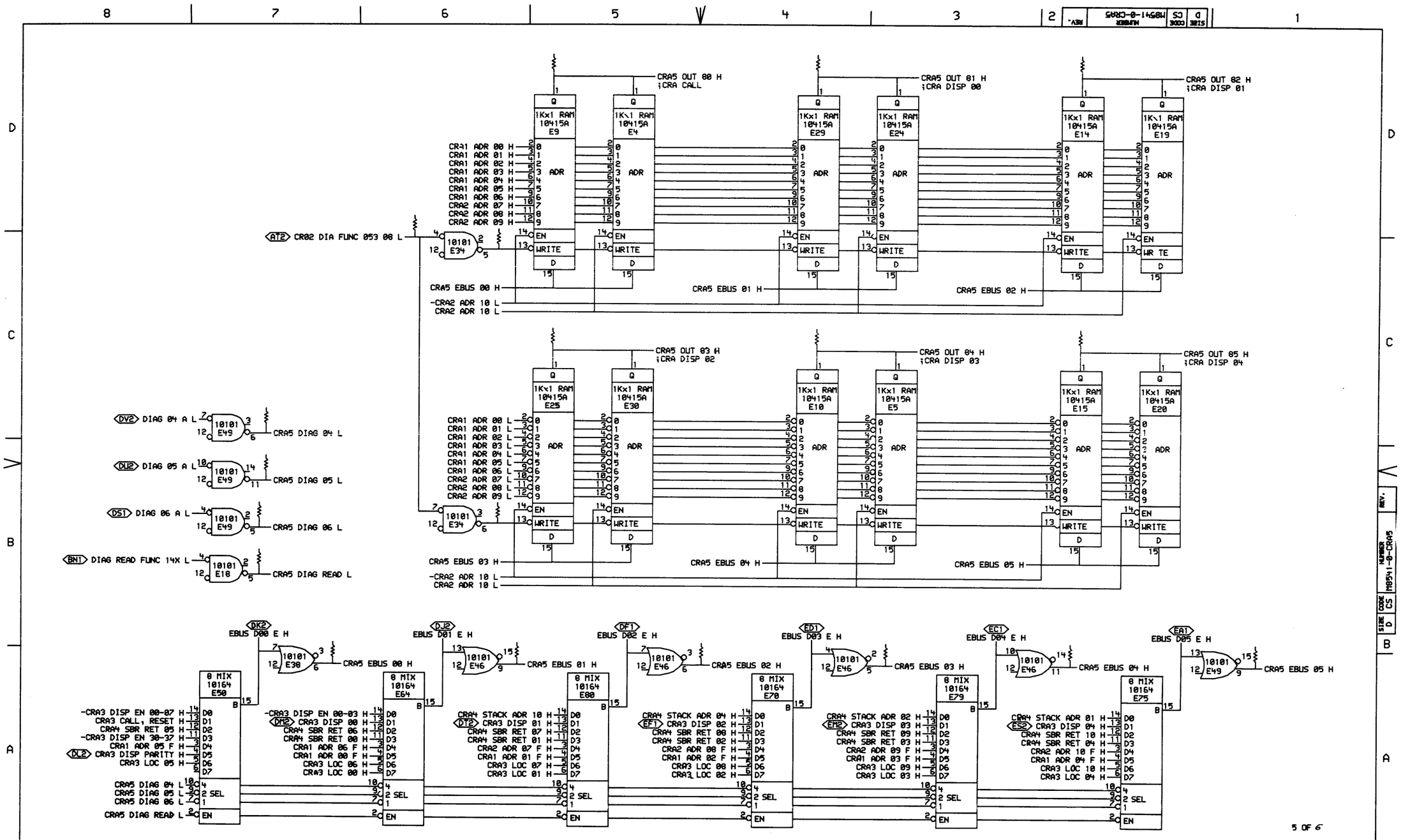

"THIS DRAWING AND SPECIFICATIONS, HEREIN, ARE THE PROPER T OF DIGITAL EQUIPMENT CORPOR-TION A D SHALL NOT BE REPRODUCED OR COPIED OR USED IN WHOLE OR IN PART A THE BASIS FOR THE MA UFACTURE OR SALE OF ITEMS WITHOUT WR"TTEN PERMISSION.
COPYRIGHT © 1976, DIGITAL EQUIPMENT CORPORATION"

REVISIONS		
CHK	CH-NGE NO.	REV

digital

DRN. J. Loomis DATE 28-SEP-76 ENG. 23 Sep 1976 DATE 23 Sep 1976
CHKD. Tom Swan DATE 23 Sep 1976 BOARD LOCATION: 4A45
SHEET 1 OF 1
CRA5EA.RLS[4,151] 17-SEP-76 22:24 NEXT HIGHER ASSEMBLY:
FIR T USED ON OPTION/MODEL: KL10 B-DD-M8541-0

TITLE: CONTROL RAM ADR
2K RAM & DIAG

SIZE	CODE	NUM ER	REV.
D	CS	M8541-0-CRA5	

350

MR

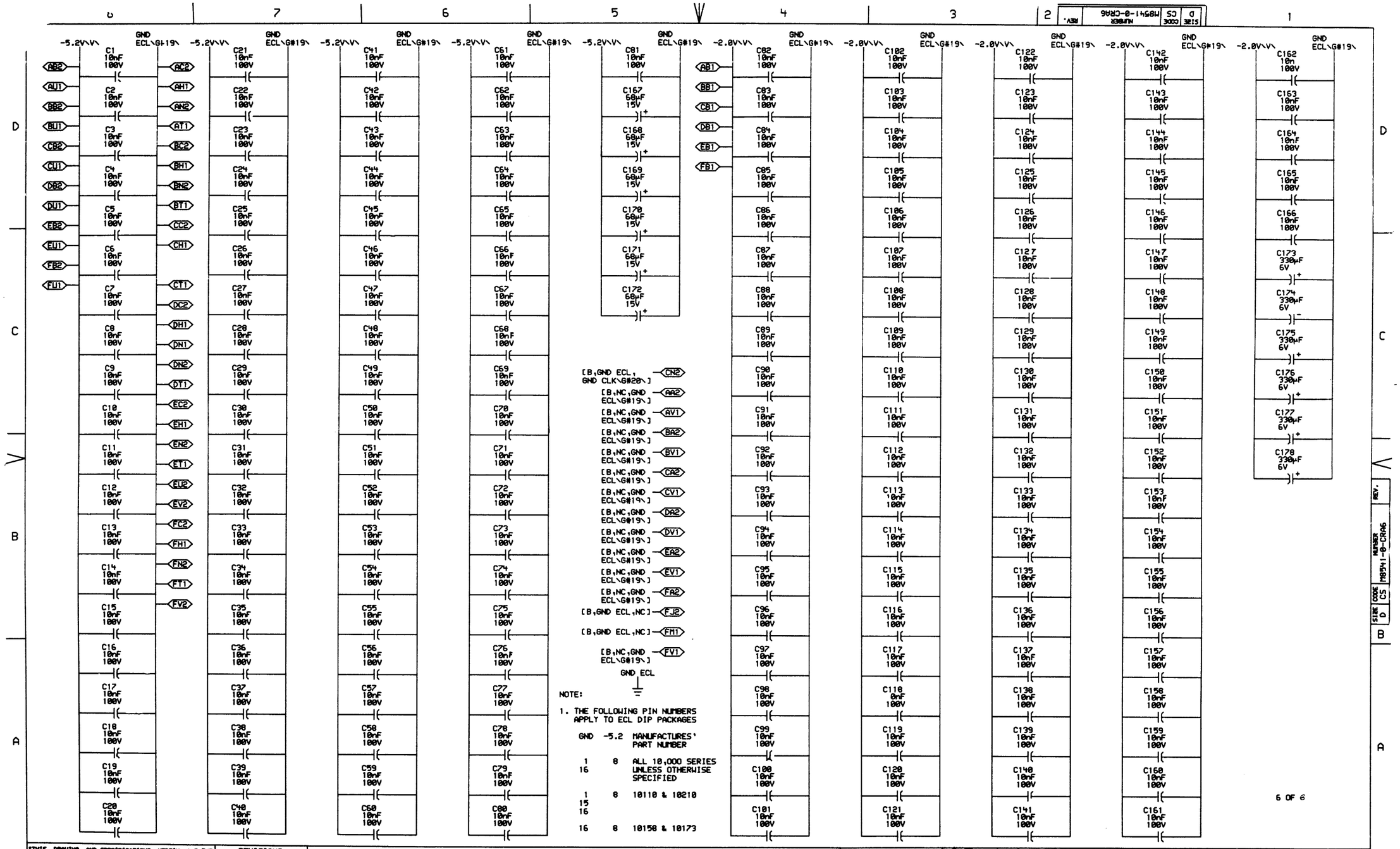

"THIS DRAWING AND SPECIFICATIONS, HEREIN, ARE THE PROPERTY OF DIGITAL EQUIPMENT CORPORATION AND SHALL NOT BE REPRODUCED OR COPIED OR USED IN WHOLE OR IN PART AS THE BASIS FOR THE MANUFACTURE OR SALE OF ITEM WITHOUT WRITTEN PERMISSION.
COPYRIGHT © 1976, DIGITAL EQUIPMENT CORPORATION"

REVISIONS		
CHK	CHANGE NO.	REV

digital

DRN. J. Gaynor
CHKD. Tom Eggert

DATE 08-SEP-76
DATE 23-OCT-76
ENG Tom Eggert
DATE 23-OCT-76

CRAGEA.RL54,161] 03-AUG-76 10:51
FIRST USED ON OPTION/MODEL: KL10
BOARD LOCATION: 4AF45
SHEET 1 OF 1
NEXT HIGHER ASSEMBLY: B-DD-M8541-0

TITLE: CONTROL RAM ADR POWER, GND, CAPS

SIZE	CODE	NUMBER	REV.
D	CS	M8541-0-CRA6	

351

RESISTOR LOC(PIN)	SHOWN ON DRW#	REF	VALUE	TERMINATES SIGNAL
R63(1)	CRA4	A7	100Ω	%DL1(2)
R101(1)	CRA2	C7	68Ω	%E1(15)
R145(1)	CRA2	B5	68Ω	%E16(15)
R210(1)	CRA2	C5	68Ω	%E2(15)
R100(1)	CRA2	D7	68Ω	%E21(11)
R256(1)	CRA1	C2	68Ω	%E21(5)
R144(1)	CRA2	D5	68Ω	%E21(6)
R262(1)	CRA1	D2	68Ω	%E21(9)
R163(1)	CRA2	C3	68Ω	%E22(15)
R141(1)	CRA2	B4	68Ω	%E26(15)
R40(1)	CRA4	C4	68Ω	%E28(3)
R162(1)	CRA2	B3	68Ω	%E31(15)
R90(1)	CRA2	B7	68Ω	%E32(15)
R143(1)	CRA2	D4	68Ω	%E33(5)
R164(1)	CRA2	D3	68Ω	%E33(6)
R49(1)	CRA5	C6	68Ω	%E34(5)
R2(1)	CRA5	B6	68Ω	%E34(6)
R165(1)	CRA2	C1	68Ω	%E36(15)
R253(1)	CRA2	B1	68Ω	%E39(15)
R254(1)	CRA2	C2	68Ω	%E40(15)
R59(1)	CRA1	B7	68Ω	%E51(15)
R97(1)	CRA1	B7	68Ω	%E51(2)
R250(1)	CRA1	B6	68Ω	%E54(15)
R187(1)	CRA1	B6	68Ω	%E54(2)
R189(1)	CRA1	B4	68Ω	%E55(15)
R191(1)	CRA1	B4	68Ω	%E55(2)
R257(1)	CRA1	B2	68Ω	%E59(15)
R261(1)	CRA1	B2	68Ω	%E59(2)
R140(1)	CRA2	C4	68Ω	%E6(15)
R67(1)	CRA4	C7	68Ω	%E61(15)
R17(1)	CRA4	C7	68Ω	%E61(2)
R71(1)	CRA4	B5	68Ω	%E67(1)
R77(1)	CRA4	B5	68Ω	%E67(14)
R72(1)	CRA4	B5	68Ω	%E67(15)
R75(1)	CRA4	B3	68Ω	%E72(1)
R79(1)	CRA4	B3	68Ω	%E72(14)
R78(1)	CRA4	B3	68Ω	%E72(15)
R74(1)	CRA4	B3	68Ω	%E72(2)
R190(1)	CRA1	C4	68Ω	%E73(11)
R251(1)	CRA1	C6	68Ω	%E73(5)

RESISTOR LOC(PIN)	SHOWN ON DRW#	REF	VALUE	TERMINATES SIGNAL
R192(1)	CRA1	D4	68Ω	%E73(6)
R166(1)	CRA1	D6	68Ω	%E73(9)
R39(1)	CRA4	B2	68Ω	%E76(1)
R42(1)	CRA4	B2	68Ω	%E76(14)
R38(1)	CRA4	B2	68Ω	%E76(15)
R35(1)	CRA4	B2	68Ω	%E76(2)
R20(1)	CRA4	C7	68Ω	%E8(14)
R68(1)	CRA4	C7	68Ω	%E8(15)
R157(1)	CRA2	A7	68Ω	%E8(2)
R237(1)	CRA2	B1	68Ω	AD 00 H
R241(1)	CRA2	B1	68Ω	AD CRY -02 H
R244(1)	CRA2	A1	68Ω	-AD=0 H
R166(1)	CRA2	B1	68Ω	ADX 00 A H
R231(1)	CRA2	B1	68Ω	AR 00 H
R224(1)	CRA2	B4	68Ω	AR 12 D H
R236(1)	CRA2	B1	68Ω	AR 18 D H
R55(1)	CRA2	B1	68Ω	ARX 00 B H
R96(1)	CRA2	A6	68Ω	ARX 01 B H
R228(1)	CRA2	A4	68Ω	ARX 13 B H
R232(1)	CRA2	B1	68Ω	BR 00 A H
R108(1)	CRA3	B7	68Ω	CLK3 CRA H
R255(1)	CRA1	C6	68Ω	CLK4 FORCE 1777 H
R198(1)	CRA2	B7	68Ω	CLK4 PF DISP 07 H
R136(1)	CRA2	B6	68Ω	CLK4 PF DISP 08 H
R200(1)	CRA2	B4	68Ω	CLK4 PF DISP 09 H
R153(1)	CRA2	B3	68Ω	CLK4 PF DISP 10 H
R252(1)	CRA2	D2	68Ω	CON COND ADR 10 H
R194(1)	CR-2	B7	68Ω	CON NICOND 07 H
R131(1)	CRA2	B6	68Ω	CON NICOND 08 H
R201(1)	CRA2	B4	68Ω	CON NICOND 09 H
R238(1)	CRA2	B1	68Ω	-CON SKIP EN 40-47 H
R167(1)	CRA2	A1	68Ω	-CON SKIP EN 50-57 H
R199(1)	CRA2	B7	68Ω	CON SR 00 H
R138(1)	CRA2	B6	68Ω	CON SR 01 H
R204(1)	CRA2	B4	68Ω	CON SR 02 H
R149(1)	CRA2	B3	68Ω	CON SR 03 H
R56(1)	CRA2	A8	68Ω	-CON2 LONG EN H
R159(1)	CRA3	B2	68Ω	-CR02 DIA FUNC 051 08 H
R169(1)	CRA3	B3	68Ω	-CR02 DIA FUNC 052 08 H
R60(1)	CRA5	C6	68Ω	-CR02 DIA FUNC 053 08 H

RESISTOR LOC(PIN)	SHOWN ON DRW#	REF	VALUE	TERMINATES SIGNAL
R53(1)	CRA1	B7	68Ω	CRA1 ADR 00 H
R3(1)	CRA1	B7	68Ω	-CRA1 ADR 00 H
R125(1)	CRA1	B7	68Ω	CRA1 ADR 00 F H
R92(1)	CRA1	C5	56Ω	CRA1 ADR 01 H
R45(1)	CRA1	C5	56Ω	-CRA1 ADR 01 H
R81(1)	CRA1	C5	68Ω	CRA1 ADR 01 F H
R50(1)	CRA1	B5	56Ω	CRA1 ADR 02 H
R4(1)	CRA1	B5	56Ω	-CRA1 ADR 02 H
R126(1)	CRA1	B5	68Ω	CRA1 ADR 02 F H
R91(1)	CRA1	C3	56Ω	CRA1 ADR 03 H
R5(1)	CRA1	C3	56Ω	-CRA1 ADR 03 H
R120(1)	CRA1	C3	68Ω	CRA1 ADR 03 F H
R90(1)	CRA1	B3	56Ω	CRA1 ADR 04 H
R8(1)	CRA1	B3	56Ω	-CRA1 ADR 04 H
R119(1)	CRA1	B3	68Ω	CRA1 ADR 04 F H
R93(1)	CRA1	C1	56Ω	CRA1 ADR 05 H
R6(1)	CRA1	C2	56Ω	-CRA1 ADR 05 H
R173(1)	CRA1	C1	68Ω	CRA1 ADR 05 F H
R94(1)	CRA1	B1	56Ω	CRA1 ADR 06 H
R46(1)	CRA1	B2	56Ω	-CRA1 ADR 06 H
R121(1)	CRA1	B1	68Ω	CRA1 ADR 06 F H
R102(1)	CRA	A7	68Ω	-CRA1 RET H
R44(1)	CRA2	C6	56Ω	CRA2 ADR 07 H
R7(1)	CRA2	C6	56Ω	-CRA2 ADR 07 H
R84(1)	CRA2	D6	68Ω	CRA2 ADR 07 F H
R57(1)	CRA2	C5	56Ω	CRA2 ADR 08 H
R10(1)	CRA2	C5	56Ω	-CRA2 ADR 08 H
R123(1)	CRA2	D5	68Ω	CRA2 ADR 08 F H
R88(1)	CRA2	C3	56Ω	CRA2 ADR 09 H
R47(1)	CRA2	C3	56Ω	-CRA2 ADR 09 H
R130(1)	CRA2	D3	68Ω	CRA2 ADR 09 F H
R51(1)	CRA2	C1	68Ω	CRA2 ADR 10 H
R43(1)	CRA2	C1	68Ω	-CRA2 ADR 10 H
R127(1)	C-A2	D1	68Ω	CRA2 ADR 10 F H
R148(1)	CRA2	A6	68Ω	CRA2 SHORT INDIR WORD H
R240(1)	CRA2	C1	68Ω	CRA2 SPARE H
R249(1)	CRA3	A7	68Ω	-CRA3 A .GE. 3 H
R181(1)	CRA3	B6	68Ω	CRA3 AREAD 01 H
R171(1)	CRA3	A6	68Ω	CRA3 AREAD 02 H
R117(1)	CRA3	A6	68Ω	CRA3 AREAD 03 H

RESISTOR LOC(PIN)	SHOWN ON DRW#	REF	VALUE	TERMINATES SIGNAL
R109(1)	CRA3	A6	68Ω	CRA3 AREAD 04 H
R197(1)	CRA3	B5	68Ω	CRA3 AREAD 07 H
R134(1)	CRA3	A5	68Ω	CRA3 AREAD 08 H
R209(1)	CRA3	A5	68Ω	CRA3 AREAD 09 H
R151(1)	CRA3	A5	68Ω	CRA3 AREAD 10 H
R107(1)	CRA3	C1	68Ω	CRA3 CALL, RESET H
R62(1)	CRA4	A8	100Ω	CRA3 CLK A H
R41(1)	CRA3	C6	68Ω	CRA3 CLK B H
R122(1)	CRA3	C6	68Ω	CRA3 CLK C H
R95(1)	CRA3	B6	68Ω	CRA3 CLK D H
R14(1)	CRA3	B6	68Ω	CRA3 CLK E H
R76(1)	CRA3	B6	68Ω	CRA3 CLK F H
R111(1)	CRA3	C3	68Ω	CRA3 DIAG ADR 00 H
R178(1)	CRA3	B3	68Ω	CRA3 DIAG ADR 01 H
R172(1)	CRA3	B3	68Ω	CRA3 DIAG ADR 02 H
R115(1)	CRA3	B3	68Ω	CRA3 DIAG ADR 03 H
R110(1)	CRA3	B3	68Ω	CRA3 DIAG ADR 04 H
R104(1)	CRA3	C2	68Ω	CRA3 DIAG ADR 05 H
R177(1)	CRA3	C2	68Ω	CRA3 DIAG ADR 06 H
R196(1)	CRA3	B2	68Ω	CRA3 DIAG ADR 07 H
R142(1)	CRA3	B2	68Ω	CRA3 DIAG ADR 08 H
R205(1)	CRA3	B2	68Ω	CRA3 DIAG ADR 09 H
R156(1)	CRA3	B2	68Ω	CRA3 DIAG ADR 10 H
R61(1)	CRA3	D3	68Ω	-CRA3 DISP 00-07 IN H
R132(1)	CRA3	C7	68Ω	CRA3 DISP 02 A H
R217(1)	CRA3	C3	68Ω	CRA3 DISP 02 B H
R211(1)	CRA3	D6	68Ω	CRA3 DISP 03 A H
R182(1)	CRA3	D6	68Ω	CRA3 DISP 03 B H
R229(1)	CRA3	C6	68Ω	CRA3 DISP 03 C H
R216(1)	CRA3	D4	68Ω	CRA3 DISP 04 A H
R105(1)	CRA3	D4	68Ω	CRA3 DISP 04 B H
R220(1)	CRA3	C4	68Ω	CRA3 DISP 04 C H
R12(1)	CRA3	D4	68Ω	-CRA3 DISP 30-37 IN H
R183(1)	CRA3	D3	68Ω	-CRA3 DISP EN 00-03 H
R202(1)	CRA3	D3	68Ω	-CRA3 DISP EN 00-07 H
R170(1)	CRA3	D1	68Ω	-CRA3 DISP EN 30-37 H
R30(1)	CRA3	B3	68Ω	CRA3 LOC 00 H
R86(1)	CRA3	A3	68Ω	CRA3 LOC 01 H
R25(1)	CRA3	A3	68Ω	CRA3 LOC 02 H
R33(1)	CRA3	A3	68Ω	CRA3 LOC 03 H

NOTE:

1. ALL TERMINATORS HAVE PIN TWO CONNECTED TO -2.0V AND ARE 5% 1/4WATT UNLESS OTHERWISE SPECIFIED
2. ENTRIES ARE SORTED BY SIGNAL NAME
3. % INDICATES OUTPUT OF DIP LOC AND
   () INDICATES PIN NUMBER

"THIS DRAWING AND SPECIFICATIONS, HEREIN, ARE THE PROPERTY OF DIGITAL EQUIPMENT CORPORATION AND SHALL NOT BE REPRODUCED OR COPIED OR USED IN WHOLE OR IN PART AS THE BASIS FOR THE MANUFACTURE OR SALE OF ITEMS WITHOUT WRITTEN PERMISSION.
COPYRIGHT © 1976, DIGITAL EQUIPMENT CORPORATION"

REVISIONS		
CHK	CHANGE NO.	REV

digital

DRN. G Smith DATE 17-SEP-76
CHK'D Tom Egan DATE 23-Sep-76
M8541.RLSC4.161 17-SEP-76 22:46
FIRST USED ON OPTION/MODEL: KL10

ENG. Tom Egan DATE 23-Sep-76
BOARD LOCATION:
SHEET 1 OF 2
NEXT HIGHER ASSEMBLY: B-DD-M8541-0

TITLE: CONTROL RAM ADR TERMINATORS

SIZE	CODE	NUMBER	REV.
D	CS	M8541-0-RES	

352

MR

RESISTOR LOC(PIN)	SHOWN DRW#	ON REF	VALUE	TERMINATES SIGNAL
R32(1)	CRA3	A3	68Ω	CRA3 LOC 04 H
R29(1)	CRA3	B1	68Ω	CRA3 LOC 05 H
R28(1)	CRA3	B1	68Ω	CRA3 LOC 06 H
R37(1)	CRA3	A1	68Ω	CRA3 LOC 07 H
R36(1)	CRA3	A1	68Ω	CRA3 LOC 08 H
R34(1)	CRA3	A1	68Ω	CRA3 LOC 09 H
R31(1)	CRA3	A1	68Ω	CRA3 LOC 10 H
R104(1)	CRA4	A2	68Ω	CRA4 CALL, RESET, 1777 H
R23(1)	CRA4	A2	68Ω	-CRA4 CALL, RESET, 1777 H
R139(1)	CRA4	A4	68Ω	CRA4 RESET H
R54(1)	CRA4	A2	68Ω	CRA4 RET AND -1777 H
R19(1)	CRA4	A2	68Ω	-CRA4 RET AND -1777 H
R112(1)	CRA4	C4	68Ω	CRA4 SBR RET 00 H
R100(1)	CRA4	C4	68Ω	CRA4 SBR RET 01 H
R176(1)	CRA4	C4	68Ω	CRA4 SBR RET 02 H
R110(1)	CRA4	C2	68Ω	CRA4 SBR RET 03 H
R114(1)	CRA4	C2	68Ω	CRA4 SBR RET 04 H
R174(1)	CRA4	C2	68Ω	CRA4 SBR RET 05 H
R106(1)	CRA4	C2	68Ω	CRA4 SBR RET 06 H
R195(1)	CRA4	C1	68Ω	CRA4 SBR RET 07 H
R133(1)	CRA4	C1	68Ω	CRA4 SBR RET 08 H
R200(1)	CRA4	C1	68Ω	CRA4 SBR RET 09 H
R155(1)	CRA4	C1	68Ω	CRA4 SBR RET 10 H
R24(1)	CRA4	A7	68Ω	CRA4 SEL CALL H
R128(1)	CRA4	B5	68Ω	CRA4 STACK ADR 01 H
R129(1)	CRA4	B5	68Ω	CRA4 STACK ADR 02 H
R124(1)	CRA4	B5	68Ω	CRA4 STACK ADR 04 H
R82(1)	CRA4	B5	68Ω	CRA4 STACK ADR 10 H
R69(1)	CRA4	D6	68Ω	CRA4 STACK ADR A H
R26(1)	CRA4	D6	68Ω	CRA4 STACK ADR B H
R27(1)	CRA4	D6	68Ω	CRA4 STACK ADR C H
R73(1)	CRA4	D6	68Ω	CRA4 STACK ADR D H
R65(1)	CRA4	C6	68Ω	CRA4 STACK ADR E H
R70(1)	CRA4	C6	68Ω	CRA4 STACK ADR F H
R21(1)	CRA4	C6	68Ω	CRA4 STACK ADR G H
R66(1)	CRA4	D7	68Ω	CRA4 STACK ADR Y H
R22(1)	CRA4	B7	68Ω	CRA4 STACK ADR Z H
R18(1)	CRA4	A7	68Ω	-CRA4 STACK WRITE H
R85(1)	CRA5	C7	68Ω	-CRA5 DIAG 04 H
R83(1)	CRA5	B7	68Ω	-CRA5 DIAG 05 H

RESISTOR LOC(PIN)	SHOWN DRW#	ON REF	VALUE	TERMINATES SIGNAL
R87(1)	CRA5	B7	68Ω	-CRA5 DIAG 06 H
R80(1)	CRA5	B7	68Ω	-CRA5 DIAG READ H
R48(1)	CRA5	A7	68Ω	CRA5 EBUS 00 H
R50(1)	CRA5	A6	68Ω	CRA5 EBUS 01 H
R52(1)	CRA5	A4	68Ω	CRA5 EBUS 02 H
R11(1)	CRA5	A3	68Ω	CRA5 EBUS 03 H
R1(1)	CRA5	A2	68Ω	CRA5 EBUS 04 H
R9(1)	CRA5	A1	68Ω	CRA5 EBUS 05 H
R13(1)	CRA5	D5	68Ω	CRA5 OUT 00 H
R15(1)	CRA5	D4	68Ω	CRA5 OUT 01 H
R16(1)	CRA5	D2	68Ω	CRA5 OUT 02 H
R64(1)	CRA5	C5	68Ω	CRA5 OUT 03 H
R89(1)	CRA5	C4	68Ω	CRA5 OUT 04 H
R99(1)	CRA5	C2	68Ω	CRA5 OUT 05 H
R242(1)	CRA2	B1	68Ω	CRAM COND 03S H
R247(1)	CRA2	B1	68Ω	CRAM COND 04S H
R246(1)	CRA2	B1	68Ω	CRAM COND 05S H
R105(1)	CRA1	C7	68Ω	CRAM J00 H
R258(1)	CRA1	D6	68Ω	CRAM J01 H
R263(1)	CRA1	C6	68Ω	CRAM J02 H
R259(1)	CRA1	D4	68Ω	CRAM J03 H
R268(1)	CRA1	C4	68Ω	CRAM J04 H
R213(1)	CRA1	D3	68Ω	CRAM J05 H
R221(1)	CRA1	C3	68Ω	CRAM J06 H
R218(1)	CRA2	D7	68Ω	CRAM J07 H
R222(1)	CRA2	D6	68Ω	CRAM J08 H
R103(1)	CRA2	D4	68Ω	CRAM J09 H
R106(1)	CRA2	D3	68Ω	CRAM J10 H
R214(1)	CRA2	B6	68Ω	DRAM B 00 H
R227(1)	CRA2	B4	68Ω	DRAM B 01 H
R233(1)	CRA2	B3	68Ω	DRAM B 02 H
R179(1)	CRA1	B6	68Ω	DRAM J 01 H
R175(1)	CRA1	B6	68Ω	DRAM J 02 H
R116(1)	CRA1	B4	68Ω	DRAM J 03 H
R113(1)	CRA1	B4	68Ω	DRAM J 04 H
R146(1)	CRA2	C7	68Ω	DRAM J 07 H
R135(1)	CRA2	C6	68Ω	DRAM J 08 H
R203(1)	CRA2	C4	68Ω	DRAM J 09 H
R152(1)	CRA2	C3	68Ω	DRAM J 10 H
R158(1)	CRA2	A7	68Ω	EA TYPE 07 H\#400\

RESISTOR LOC(PIN)	SHOWN DRW#	ON REF	VALUE	TERMINATES SIGNAL
R147(1)	CRA2	A6	68Ω	EA TYPE 08 H\#400\
R219(1)	CRA2	A4	68Ω	EA TYPE 09 H\#400\
R225(1)	CRA2	A3	68Ω	EA TYPE 10 H\#400\
R161(1)	CRA2	B1	68Ω	IR AC=0 H
R207(1)	CRA2	B6	68Ω	IR NORM 08 H
R223(1)	CRA2	B4	68Ω	IR NORM 09 H
R235(1)	CRA2	B3	68Ω	IR NORM 10 H
R248(1)	CRA2	B1	68Ω	MCL6 PC SECTION 0 H
R230(1)	CRA2	B4	68Ω	MQ 34 H
R234(1)	CRA2	B3	68Ω	MQ 35 H
R245(1)	CRA2	B1	68Ω	SCD1 SCAD SIGN H
R243(1)	CRA2	B1	68Ω	-SCD1 SCAD=0 H
R215(1)	CRA2	B6	68Ω	SCD2 FE SIGN H
R160(1)	CRA2	B1	68Ω	SCD2 SC SIGN H
R212(1)	CRA2	B6	68Ω	SCD4 FPD H
R150(1)	CRA2	B3	68Ω	SCD4 NICOND 10 H
R239(1)	CRA2	C1	68Ω	-SHM1 AR PAR ODD B H
R226(1)	CRA2	A3	68Ω	SHM1 INDEXED H
R193(1)	CRA2	B7	68Ω	SHM4 SH 00 A H
R137(1)	CRA2	B6	68Ω	SHM4 SH 01 A H
R206(1)	CRA2	B4	68Ω	SHM4 SH 02 A H
R154(1)	CRA2	B3	68Ω	SHM4 SH 03 A H
R168(1)	CRA2	A1	68Ω	-VMA1 LOCAL AC ADDRESS H

NOTE:

1. ALL TER INATORS HAVE PIN TWO CONNECTED TO -2.0V AND ARE 5% 1/4WATT UNLESS OTHERWISE SPECIFIED
2. ENTRIES ARE SORTED BY SIGNAL NAME
3. % INDICATES OUTPUT OF DIP LOC AND
   () INDICATES PIN NUMBER

"THIS DRAWING AND SPECIFICATIONS, HEREIN, ARE THE PROPERTY OF DIGITAL EQUIPMENT CORPORATION AND SHALL NOT BE REPRODUCED OR COPIED OR USED IN WHOLE OR IN PART AS THE BASIS FOR THE MANUFACTURE OR SALE OF ITEMS WITHOUT WRITTEN PERMISSION.
COPYRIGHT © 1976, DIGITAL EQUIPMENT CORPORATION"

REVISIONS		
CHK	CHA IGE NO.	REV

digital

DRN. C Smith DATE 17-SEP-76 ENG. DATE
CHKD. DATE
M8541 2.RLS(4.161) 17-SEP-76 22:4 NEXT HIGHER ASSEMBLY: B-DD-M8541-0
FIRST USED ON OPTION/MODEL: KL10

BOARD LOCATION:
SHEET 2 OF 2

TITLE: CONTROL RAM ADR TERMINATORS

SIZE	CODE	NUMBER	REV.
D	CS	M8541-0-RES	

353

SIZE	CODE	NUMBER	REV.
B	DD	M8542-Ø	

DRAWING NO.	NO. OF SHTS	PART NO.	DESCRIPTION	REVISIONS
			MODULE REVISION	A
D-UA-M8542-Ø-Ø	5		VIRTUAL MEMORY ADDRESS	-
D-CS-M8542-Ø-VMA1	1		VMA BOARD ADDER & CONTROL	-
D-CS-M8542-Ø-VMA2	1		VMA BOARD VMA REGISTER	-
D-CS-M8542-Ø-VMA3	1		VMA BOARD PC & ADR BRK REG.	-
D-CS-M8542-Ø-VMA4	1		VMA BOARD VMA HELD REG.	-
D-CS-M8542-Ø-VMA5	1		VMA BOARD DIAGNOSTICS	-
D-CS-M8542-Ø-VMA6	1		VMA BOARD POWER,GND,CAPS	-
D-CS-M8542-Ø-RES	2		VMA BOARD TERMINATORS	-
D-AH-M8542-Ø-5	4		VIRTUAL MEMORY ADDRESS	-
		5011888	ETCHED CIRCUIT BOARD	B
M8542-Ø-L	-		P/C DESIGN DATA BASE	REF
M8542-Ø-PL	-		INSERTION P/L DATA BASE	REF
POO-M8542-ØØ	-		PROCESS SHEETS	REF

NOTES:

REVISIONS	REV	CHG NO	DATE

"THIS DRAWING AND SPECIFICATIONS, HEREIN, ARE THE PROPERTY OF DIGITAL EQUIPMENT CORPORATION AND SHALL NOT BE REPRODUCED OR COPIED OR USED IN WHOLE OR IN PART AS THE BASIS FOR THE MANUFACTURE OR SALE OF ITEMS WITHOUT WRITTEN PERMISSION.
COPYRIGHT ©1976, DIGITAL EQUIPMENT CORPORATION"

digital

USED ON OPTION/MODEL	
KL1Ø	

DRN. RWCarter	5 Oct 76	TITLE VIRTUAL MEMORY ADDRESS
CHK'D.	29 Sep 76	
ENG.	15 Oct 76	SIZE B CODE DD NUMBER M8542-Ø REV.
PROD. Bill Culy	15 Oct 76	SHEET 1 OF 1

DRB 126 EN-01149-16-N176(325)

MR 354

THIS DRAWING AND SPECIFICATIONS, HEREIN, ARE THE PROPERTY OF DIGITAL EQUIPMENT CORPORATION AND SHALL NOT BE REPRODUCED OR COPIED OR USED IN WHOLE OR IN PART OF THE DATA FOR THE MANUFACTURE OR SALE OF ITEMS WITHOUT WRITTEN PERMISSION.
COPYRIGHT © 1976 DIGITAL EQUIPMENT CORPORATION

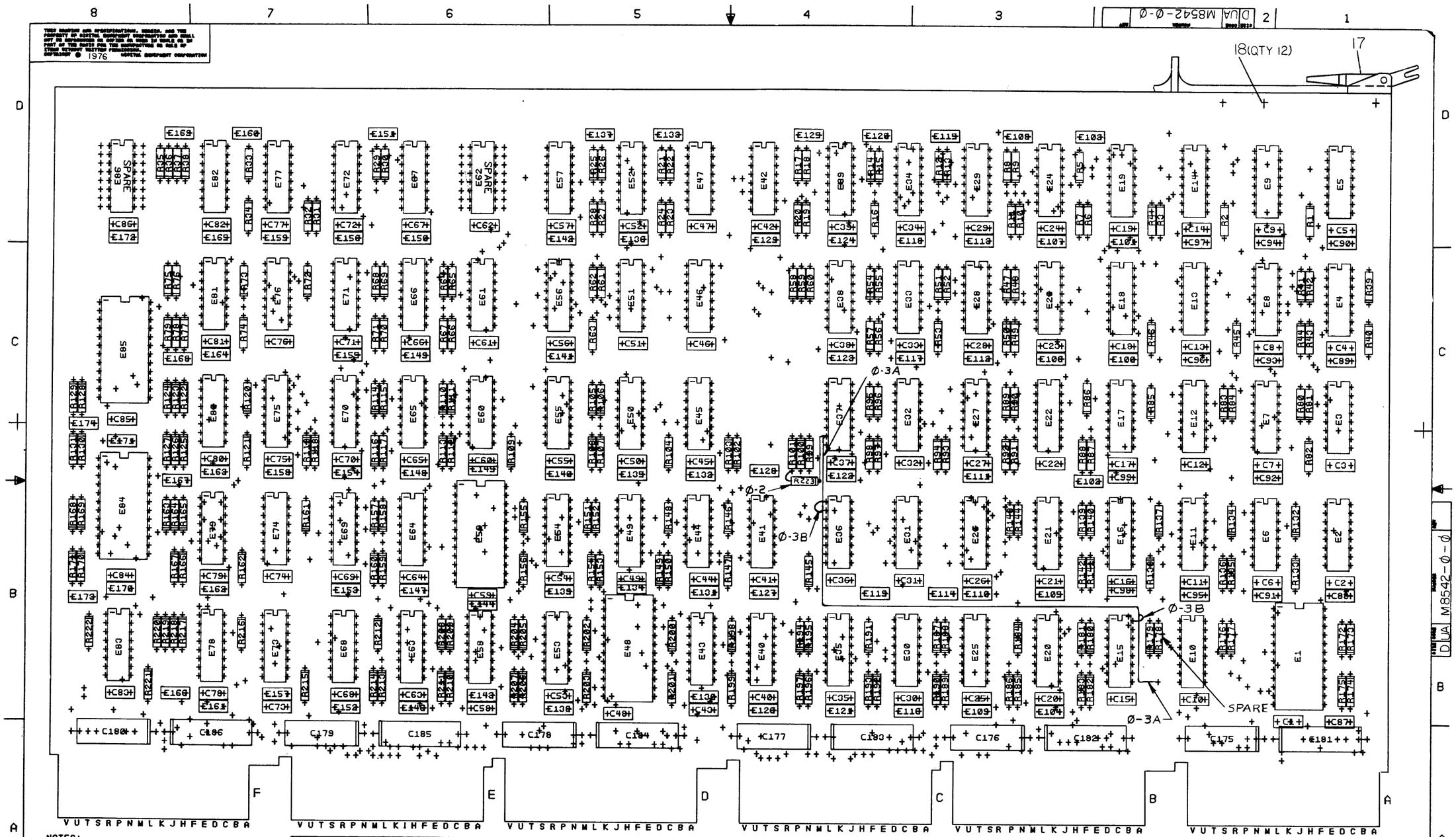

NOTES:

REV	CHANGE NO	CHK

ETCH REV.
P.C. DESIGN DATA BASE REV.

SIGNATURES	DATE
DRN. RW Gaynter	7MAY76
CHK'D.	7MAY76
ENG. Tom Sykes	15OCT76
PROJ.ENG. Tom Sykes	15OCT76
PROD. Bill Gurley	15OCT76
SCALE 2/1	
SHT. 2 OF 5	

digital

TITLE VIRTUAL MEMORY ADDRESS

SIZE	CODE	NUMBER	REV
D	UA	M8542-Ø-Ø	

NEXT HIGHER ASSY. B-DD-M8542-0

MR 1 MS# 130203

355

Diag FN 16x ⇒ M8537 EBUS Reg
E<Ø:8>, E<34:35> always

E<34:35> := PMA<34:35>

M8578 PMA if EBOX REQ GRANT (6) PMA<35> = VMA2 VMA35
if EBOX BRA GRANT (Ø) PMA<35> = PMA4 BRA35

PMA4 BRA35 := SBUS ADR<35>

M8542 VMA A0<35> output of 10181 ALU

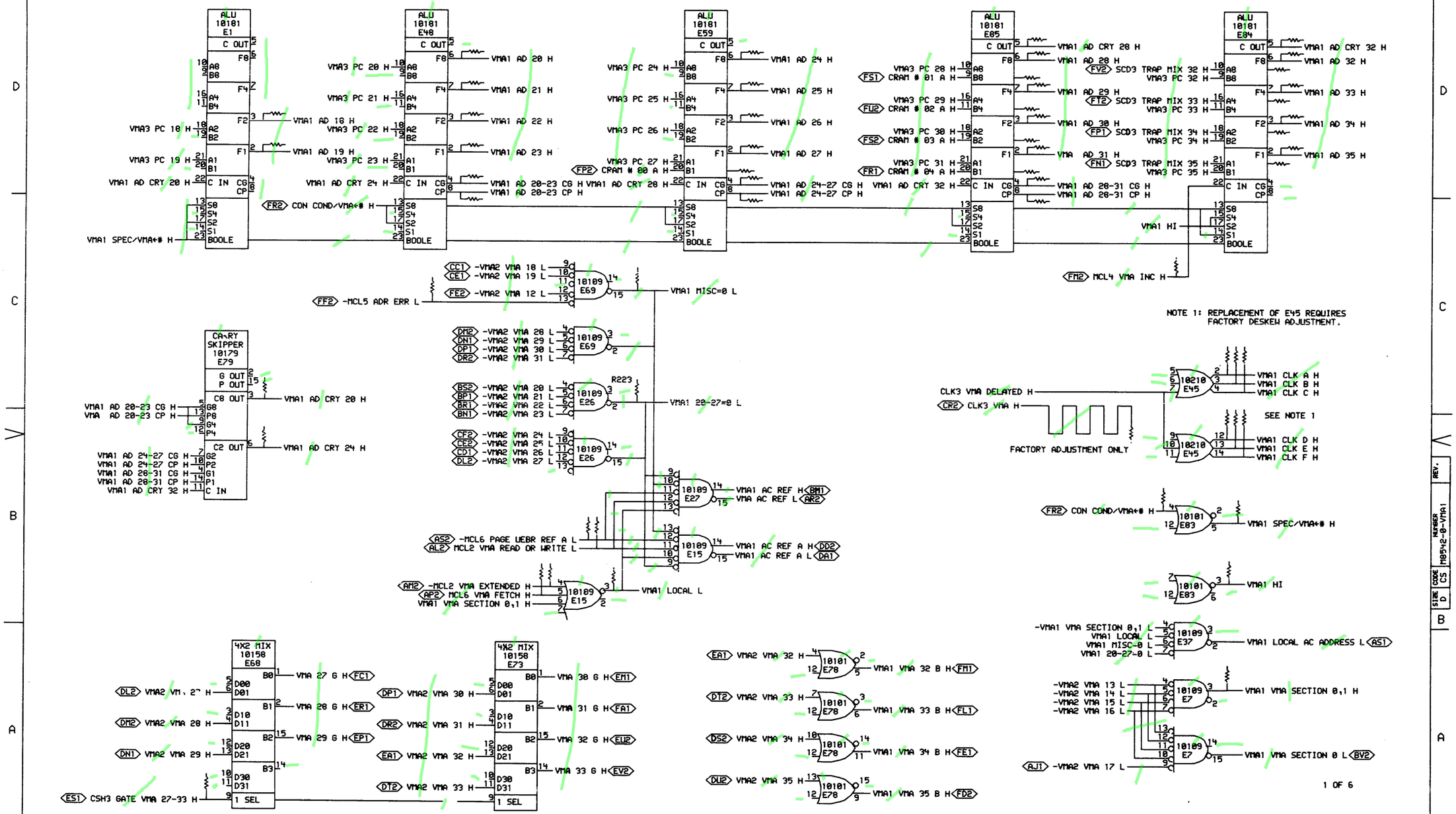

"THIS DRAWING AND SPECIFICATIONS, HEREIN, ARE THE PROPERTY OF DIGITAL EQUIPMENT CORPORATION AND SHALL NOT BE REPRODUCED OR COPIED OR USED IN WHOLE OR IN PART AS THE BASIS FOR THE MANUFACTURE OR SALE OF ITEMS WITHOUT WRITTEN PERMISSION.
COPYRIGHT © 1976, DIGITAL EQUIPMENT CORPORATION"

REVISIONS		
CHK	CHANGE NO.	REV

digital

DRN. | DATE 24-SEP-76 | ENG. Tom Egan | DATE 24-Sep-76
CHKD. Tom Egan | DATE 24-Sep-76 | BOARD LOCATION: 4AF38
SHEET 1 OF 1

VMA1EB.DRW[4,161] 23-SEP-76 17:46 | NEXT HIGHER ASSEMBLY:
FIRST USED ON OPTION/MODEL: KL10 | B-DD-M8542-0

TITLE: VMA BOARD ADDER & CONTROL

SIZE	CODE	NUMBER	REV.
D	CS	M8542-0-VMA1	

356

MR

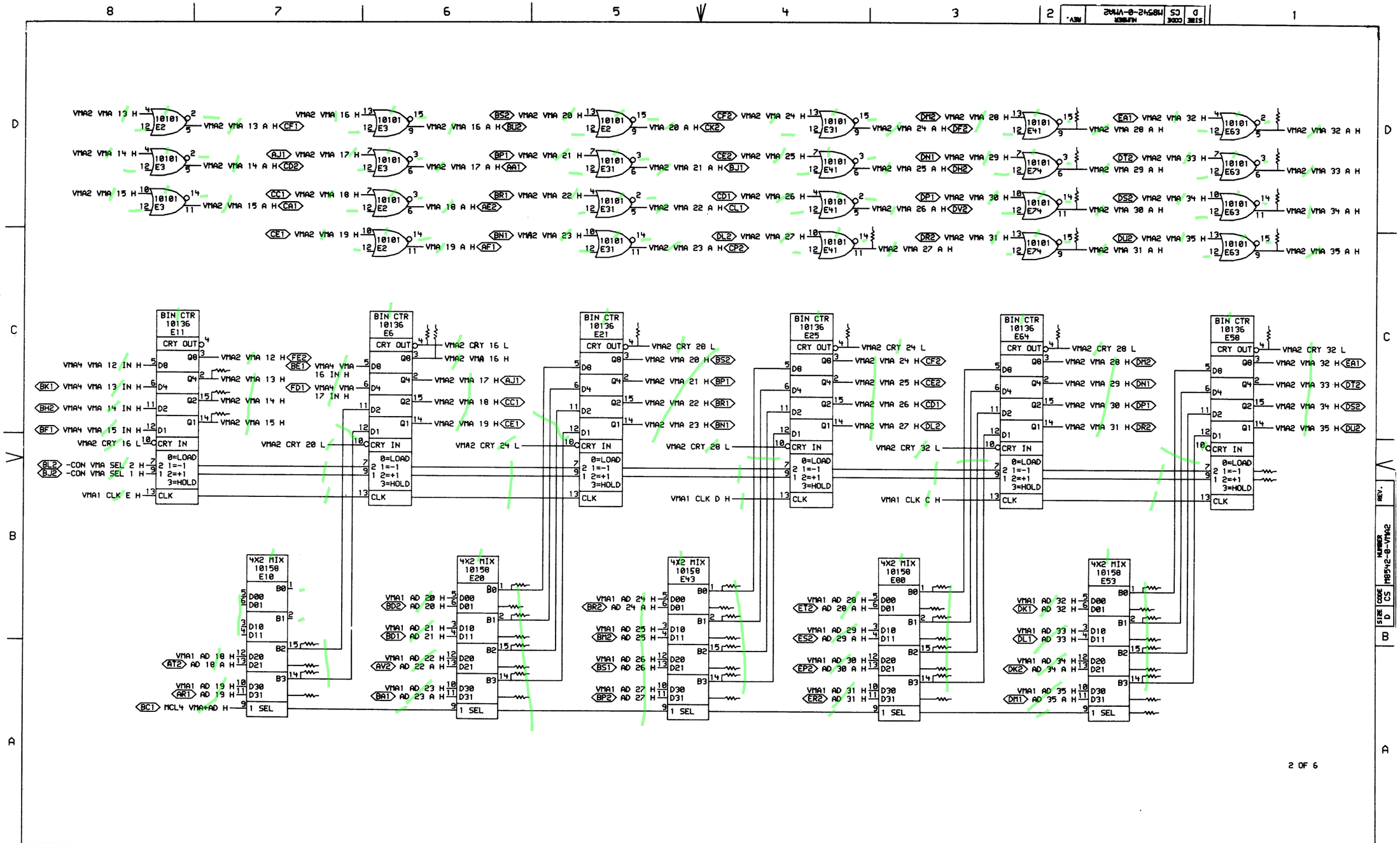

"THIS DRAWING AND SPECIFICATIONS, HEREIN, ARE THE PROPERTY OF DIGITAL EQUIPMENT CORPORATION AND SHALL NOT BE REPRODUCED OR COPIED OR USED IN WHOLE OR IN PART AS THE BASIS FOR THE MANUFACTURE OR SALE OF ITEMS WITHOUT WRITTEN PERMISSION. COPYRIGHT © 1976, DIGITAL EQUIPMENT CORPORATION"

REVISIONS		
CHK	CHANGE NO.	REV

digital

DRN. | DATE 28-SEP-76 | ENG. | DATE 23-Sep-76
CHK'D | DATE 23-Sep-76 | BOARD LOCATION: 4AF28
SHEET 1 OF 1
VMA2EB.RLS(4,161) 19-SEP-76 17:29 | NEXT HIGHER ASSEMBLY:
FIRST USED ON OPTION/MODEL: KL10 | B-DD-M8542-0

TITLE: VMA BOARD
VMA REGISTER

SIZE	CODE	NUMBER	REV.
D	CS	M8542-0-VMA2	

357

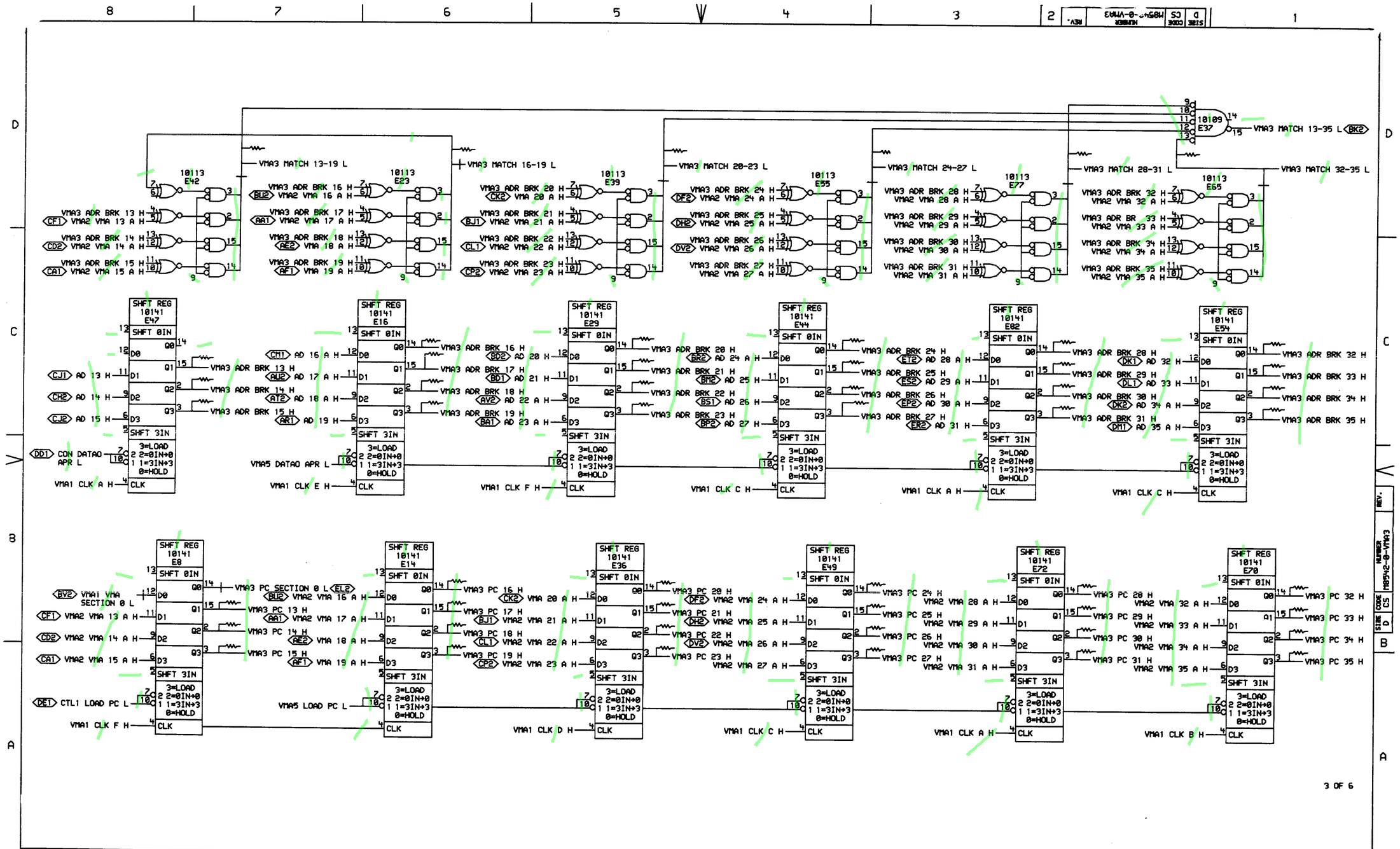

"THIS DRAWING AND SPECIFICATIONS, HEREIN, ARE THE PROPERTY OF DIGITAL EQUIPMENT CORPORATION AND SHALL NOT BE REPRODUCED OR COPIED OR USED IN WHOLE OR IN PART AS THE BASIS FOR THE MANUFACTURE OR SALE OF ITEMS WITHOUT WRITTEN PERMISSION. COPYRIGHT © 1976, DIGITAL EQUIPMENT CORPORATION"

REVISIONS		
CHK	CHANGE NO.	REV

digital

VMA3EB.RLSC4.1613 | 19-SEP-76 17:38

FIRST USED ON OPTION/MODEL: KL10

DRN. | DATE 28-SEP-76
CHKD. | DATE 23-Sept-76
ENG. | DATE 23-Sept-76
BOARD LOCATION: 4AF38
SHEET 1 OF 1
NEXT HIGHER ASSEMBLY: B-DD-M8542-0

TITLE: VMA BOARD PC & ADR BRK REG

SIZE	CODE	NUMBER	REV.
D	CS	M8542-0-VMA3	

358

MR

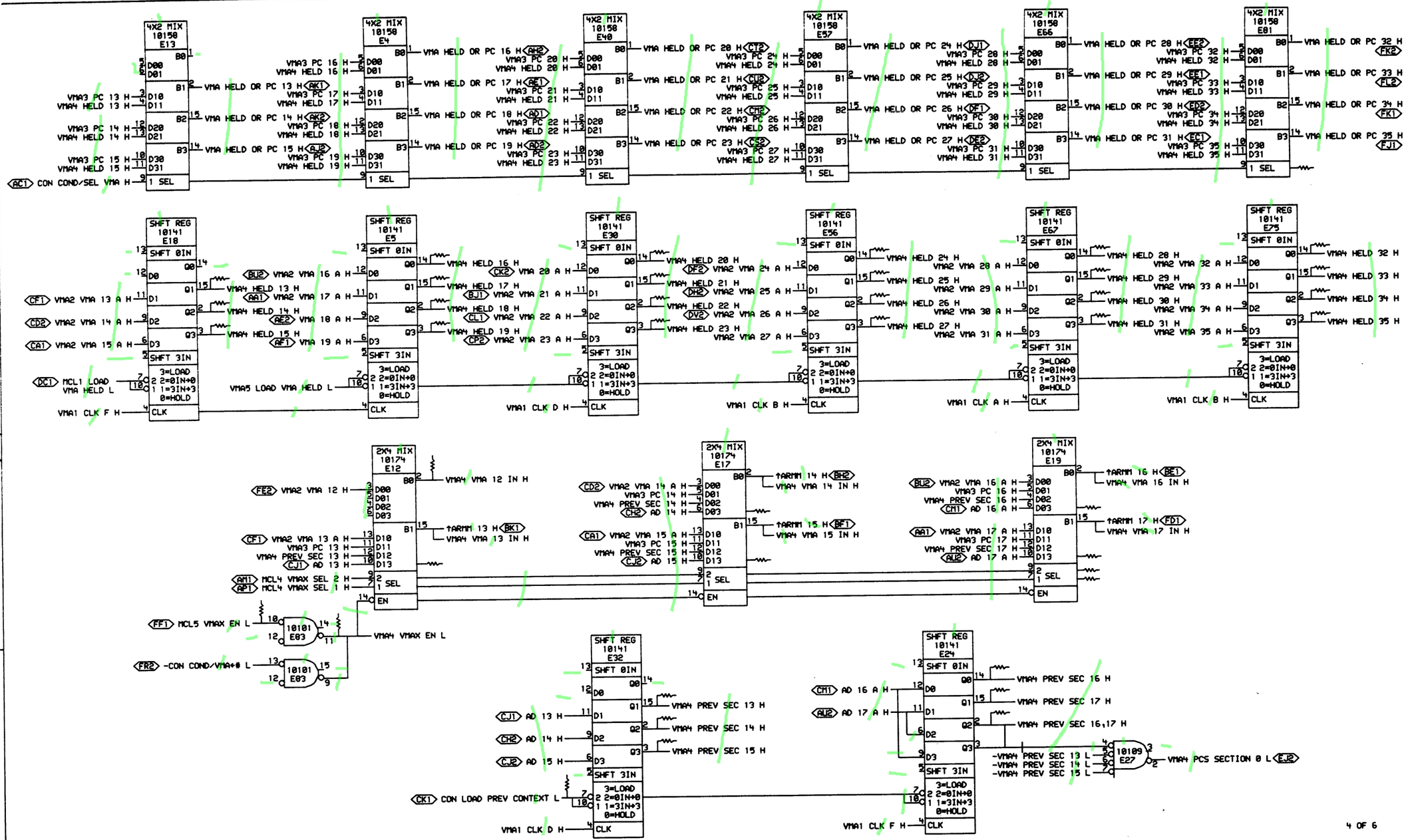

"THIS DRAWING AND SPECIFICATIONS, HEREIN, ARE THE PROPERTY OF DIGITAL EQUIPMENT CORPORATION AND SHALL NOT BE REPRODUCED OR COPIED OR USED IN WHOLE OR IN PART AS THE BASIS FOR THE MANUFACTURE OR SALE OF ITEMS WITHOUT WRITTEN PERMISSION.
COPYRIGHT © 1976, DIGITAL EQUIPMENT CORPORATION"

REVISIONS		
CHK	CHANGE NO.	REV

digital

DRN. [illegible] DATE 28-SEP-76 ENG. [illegible] DATE 23-Sep-76
CHK'D [illegible] DATE 23-Sep-76
VMA4EB.RLS(4,161) 19-SEP-76 18:37
FIRST USED ON OPTION/MODEL: KL10

BOARD LOCATION: 4A F38
SHEET 1 OF 1
NEXT HIGHER ASSEMBLY: B-DD-M8542-0

TITLE: VMA BOARD
VMA HELD REG

SIZE	CODE	NUMBER	REV.
D	CS	M8542-0-VMA4	

359

MK

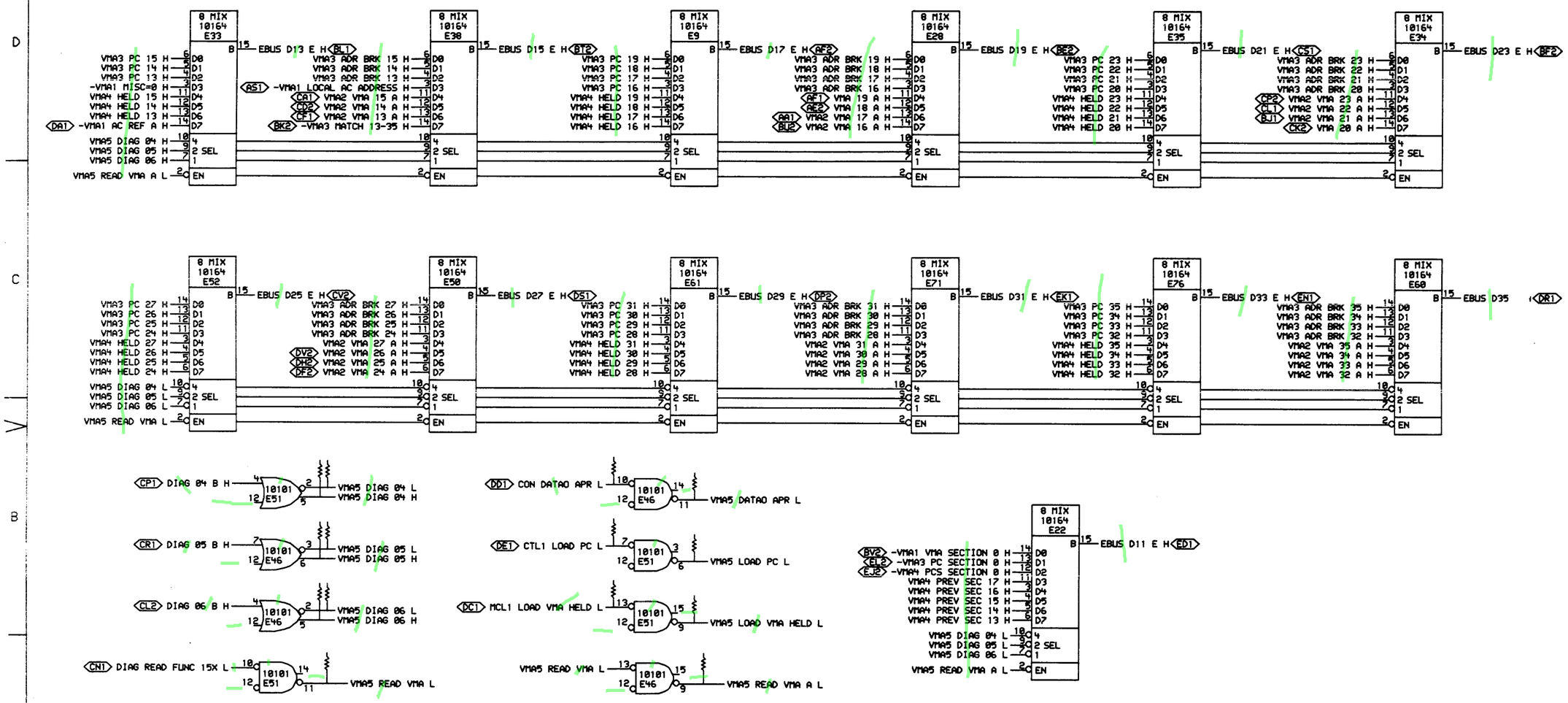

5 OF 6

"THIS DRAWING AND SPECIFICATIONS, HEREIN, ARE THE PROPERTY OF DIGITAL EQUIPMENT CORPORATION AND SHALL NOT BE REPRODUCED OR COPIED OR USED IN WHOLE OR IN PART AS THE BASIS FOR THE MANUFACTURE OR SALE OF ITEMS WITHOUT WRITTEN PERMISSION. COPYRIGHT © 1976, DIGITAL EQUIPMENT CORPORATION"

REVISIONS		
CHK	CHANGE NO.	REV

digital

VMA5EB.RLS(4.161) 19-SEP-76 17:32

FIRST USED ON OPTION/MODEL: KL10

DRN. S. Loosley DATE 20-SEP-76
CHK'D. Tom Eggers DATE 23Sep76
ENG. Tom Eggers DATE 23Sep76
BOARD LOCATION: 4AF38
SHEET 1 OF 1
NEXT HIGHER ASSEMBLY: B-DD-M8542-0

TITLE: VMA BOARD DIAGNOSTICS

SIZE	CODE	NUMBER	REV.
D	CS	M8542-0-VMA5	

360

MC

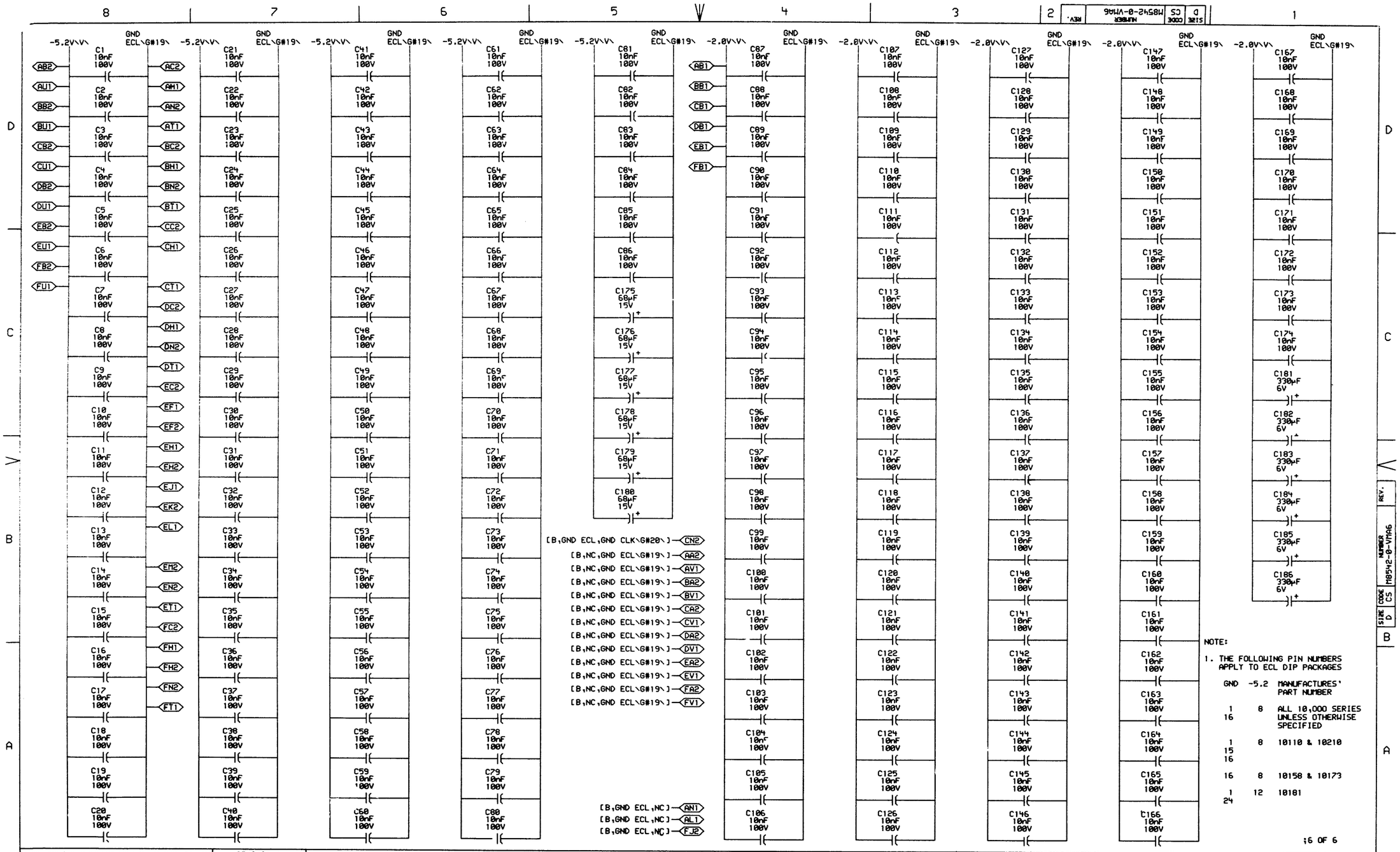

NOTE:

1. THE FOLLOWING PIN NUMBERS APPLY TO ECL DIP PACKAGES

GND	-5.2	MANUFACTURES' PART NUMBER
1 16	8	ALL 10,000 SERIES UNLESS OTHERWISE SPECIFIED
1 15 16	8	10110 & 10210
16	8	10158 & 10173
1 24	12	10181

;6 OF 6

"THIS DRAWING AND SPECIFICATIONS, HEREIN, ARE THE PROPERTY OF DIGITAL EQUIPMENT CORPORATION AND SHALL NOT BE REPRODUCED OR COPIED OR USED IN WHOLE OR IN PART AS THE BASIS FOR THE MANUFACTURE OR SALE OF ITEMS WITHOUT WRITTEN PERMISSION.
COPYRIGHT © 1976, DIGITAL EQUIPMENT CORPORATION"

REVISIONS

CHK	CHANGE NO.	REV

digital

DRN. DATE 24-SEP-76
CHKD DATE
ENG DATE
BOARD LOCATION: 4AF38
SHEET 1 OF 1
VMA6EB.DRW[4,161] 23-SEP-76 17:54
NEXT HIGHER ASSEMBLY: B-DD-M8542-0
FIRST USED ON OPTION/MODEL: KL10

TITLE: VMA BOARD POWER, GND, CAPS

SIZE	CODE	NUMBER	REV.
D	CS	M8542-0-VMA6	

361

RESISTOR LOC(PIN)	SHOWN ON DRW#	REF	VALUE	TERMINATES SIGNAL
R134(1)	VMA2	A7	68Ω	%E10(14)
R133(1)	VMA2	A7	68Ω	%E10(15)
R144(1)	VMA2	B6	68Ω	%E20(1)
R139(1)	VMA2	A6	68Ω	%E20(14)
R140(1)	VMA2	A6	68Ω	%E20(15)
R143(1)	VMA2	B6	68Ω	%E20(2)
R188(1)	VMA2	B4	68Ω	%E43(1)
R189(1)	VMA2	A4	68Ω	%E43(14)
R190(1)	VMA2	A4	68Ω	%E43(15)
R187(1)	VMA2	B4	68Ω	%E43(2)
R209(1)	VMA2	B2	68Ω	%E53(1)
R213(1)	VMA2	A2	68Ω	%E53(14)
R210(1)	VMA2	A2	68Ω	%E53(15)
R214(1)	VMA2	B2	68Ω	%E53(2)
R158(1)	VMA2	B3	68Ω	%E80(1)
R116(1)	VMA2	A3	68Ω	%E80(14)
R117(1)	VMA2	A3	68Ω	%E80(15)
R160(1)	VMA2	B3	68Ω	%E80(2)
R17(1)	VMA4	B6	68Ω	AD 13 H
R18(1)	VMA4	B4	68Ω	AD 14 H
R24(1)	VMA4	B4	68Ω	AD 15 H
R5(1)	VMA4	B2	68Ω	AD 16 A H
R9(1)	VMA4	B2	68Ω	AD 17 A H
R138(1)	VMA2	A7	68Ω	AD 18 A H
R141(1)	VMA2	A7	68Ω	AD 19 H
R8(1)	VMA2	B6	68Ω	AD 20 H
R10(1)	VMA2	B6	68Ω	AD 21 H
R11(1)	VMA2	A6	68Ω	AD 22 A H
R12(1)	VMA2	A6	68Ω	AD 23 A H
R102(1)	VMA2	B4	68Ω	AD 24 A H
R148(1)	VMA2	B4	68Ω	AD 25 H
R147(1)	VMA2	A4	68Ω	AD 26 H
R104(1)	VMA2	A4	68Ω	AD 27 H
R33(1)	VMA2	B3	68Ω	AD 28 A H
R34(1)	VMA2	B3	68Ω	AD 29 A H
R35(1)	VMA2	A3	68Ω	AD 30 A H
R38(1)	VMA2	A3	68Ω	AD 31 H
R151(1)	VMA2	B2	68Ω	AD 32 H
R152(1)	VMA2	B2	68Ω	AD 33 H
R154(1)	VMA2	A2	68Ω	AD 34 A H

NOTE:

1. ALL TERMINATORS HAVE PIN TWO CONNECTED TO -2.0V AND ARE 5% 1/4WATT UNLESS OTHERWISE SPECIFIED
2. ENTRIES ARE SORTED BY SIGNAL NAME
3. % INDICATES OUTPUT OF DIP LOC AND () INDICATES PIN NUMBER

RESISTOR LOC(PIN)	SHOWN ON DRW#	REF	VALUE	TERMINATES SIGNAL
R156(1)	VMA2	A2	68Ω	AD 35 A H
R103(1)	VMA1	B2	68Ω	CLK3 VMA H
R197(1)	VMA4	D1	68Ω	CON COND/SEL VMA H
R201(1)	VMA1	B2	68Ω	CON COND/VMA+# H
R23(1)	VMA5	B5	68Ω	-CON DATAO APR H
R7(1)	VMA4	A5	68Ω	-CON LOAD PREV CONTEXT H
R211(1)	VMA2	B1	68Ω	-CON VMA SEL 1 H
R159(1)	VMA2	B1	68Ω	-CON VMA SEL 2 H
R155(1)	VMA1	D4	68Ω	CRAM # 00 A H
R131(1)	VMA1	D3	68Ω	CRAM # 01 A H
R130(1)	VMA1	D3	68Ω	CRAM # 02 A H
R79(1)	VMA1	D3	68Ω	CRAM # 03 A H
R129(1)	VMA1	D3	68Ω	CRAM # 04 A H
R215(1)	VMA1	A7	68Ω	CSH3 GATE VMA 27-33 H
R45(1)	VMA5	B5	68Ω	-CTL1 LOAD PC H
R46(1)	VMA5	B5	68Ω	-MCL1 LOAD VMA HELD H
R181(1)	VMA1	B5	68Ω	-MCL2 VMA EXTENDED H
R89(1)	VMA1	B5	68Ω	-MCL2 VMA READ OR WRITE H
R163(1)	VMA1	C2	68Ω	MCL4 VMA INC H
R6(1)	VMA4	B2	68Ω	MCL4 VMAX SEL 1 H
R4(1)	VMA4	B2	68Ω	MCL4 VMAX SEL 2 H
R121(1)	VMA2	A2	68Ω	MCL4 VMA+AD H
R161(1)	VMA1	C6	68Ω	MCL5 ADR ERR H
R221(1)	VMA4	B7	68Ω	-MCL5 VMAX EN H
R93(1)	VMA1	B5	68Ω	MCL6 PAGE UEBR REF A H
R180(1)	VMA1	B6	68Ω	MCL6 VMA FETCH H
R170(1)	VMA1	D1	68Ω	SCD3 TRAP MIX 32 H
R171(1)	VMA1	D1	68Ω	SCD3 TRAP MIX 33 H
R168(1)	VMA1	D1	68Ω	SCD3 TRAP MIX 34 H
R164(1)	VMA1	D1	68Ω	SCD3 TRAP MIX 35 H
R223(1)	VMA1	C5	68Ω	-VMA1 20-27=0 H
R176(1)	VMA1	D7	68Ω	VMA1 AD 18 H
R177(1)	VMA1	D7	68Ω	VMA1 AD 19 H
R185(1)	VMA1	D6	68Ω	VMA1 AD 20 H
R217(1)	VMA1	D6	68Ω	VMA1 AD 20-23 CG H
R216(1)	VMA1	C6	68Ω	VMA1 AD 20-23 CP H
R184(1)	VMA1	D6	68Ω	VMA1 AD 21 H
R182(1)	VMA1	D6	68Ω	VMA1 AD 22 H
R183(1)	VMA1	D6	68Ω	VMA1 AD 23 H
R203(1)	VMA1	D4	68Ω	VMA1 AD 24 H

RESISTOR LOC(PIN)	SHOWN ON DRW#	REF	VALUE	TERMINATES SIGNAL
R166(1)	VMA1	D4	68Ω	VMA1 AD 24-27 CG H
R167(1)	VMA1	C4	68Ω	VMA1 AD 24-27 CP H
R150(1)	VMA1	D4	68Ω	VMA1 AD 25 H
R149(1)	VMA1	D4	68Ω	VMA1 AD 26 H
R146(1)	VMA1	D4	68Ω	VMA1 AD 27 H
R127(1)	VMA1	D3	68Ω	VMA1 AD 28 H
R165(1)	VMA1	D3	68Ω	VMA1 AD 28-31 CG H
R162(1)	VMA1	C3	68Ω	VMA1 AD 28-31 CP H
R122(1)	VMA1	D3	68Ω	VMA1 AD 29 H
R126(1)	VMA1	D3	68Ω	VMA1 AD 30 H
R125(1)	VMA1	D3	68Ω	VMA1 AD 31 H
R205(1)	VMA1	D1	68Ω	VMA1 AD 32 H
R208(1)	VMA1	D1	68Ω	VMA1 AD 33 H
R204(1)	VMA1	D1	68Ω	VMA1 AD 34 H
R207(1)	VMA1	D1	68Ω	VMA1 AD 35 H
R173(1)	VMA1	C7	68Ω	VMA1 AD CRY 20 H
R153(1)	VMA1	B7	68Ω	VMA1 AD CRY 24 H
R109(1)	VMA1	D3	68Ω	VMA1 AD CRY 28 H
R124(1)	VMA1	D1	68Ω	VMA1 AD CRY 32 H
R37(1)	VMA1	C2	68Ω	VMA1 CLK A H
R120(1)	VMA1	C2	68Ω	VMA1 CLK B H
R157(1)	VMA1	C2	68Ω	VMA1 CLK C H
R57(1)	VMA1	B2	68Ω	VMA1 CLK D H
R132(1)	VMA1	B2	68Ω	VMA1 CLK E H
R13(1)	VMA1	B2	68Ω	VMA1 CLK F H
R219(1)	VMA1	B2	68Ω	VMA1 HI
R100(1)	VMA1	B5	68Ω	-VMA1 LOCAL H
R179(1)	VMA1	C5	68Ω	-VMA1 MISC=0 H
R174(1)	VMA1	B2	68Ω	VMA1 SPEC/VMA+# H
R95(1)	VMA1	A2	68Ω	VMA1 VMA SECTION 0,1 H
R136(1)	VMA2	C6	68Ω	-VMA2 CRY 16 H
R135(1)	VMA2	C5	68Ω	-VMA2 CRY 20 H
R142(1)	VMA2	C4	68Ω	-VMA2 CRY 24 H
R186(1)	VMA2	C2	68Ω	-VMA2 CRY 28 H
R212(1)	VMA2	C1	68Ω	-VMA2 CRY 32 H
R84(1)	VMA2	C7	68Ω	VMA2 VMA 13 H
R81(1)	VMA2	C7	68Ω	VMA2 VMA 14 H
R82(1)	VMA2	C7	68Ω	VMA2 VMA 15 H
R80(1)	VMA2	C6	68Ω	VMA2 VMA 16 H
R63(1)	VMA2	C3	68Ω	VMA2 VMA 27 A H

RESISTOR LOC(PIN)	SHOWN ON DRW#	REF	VALUE	TERMINATES SIGNAL
R31(1)	VMA2	D2	68Ω	VMA2 VMA 28 A H
R32(1)	VMA2	D2	68Ω	VMA2 VMA 29 A H
R30(1)	VMA2	D2	68Ω	VMA2 VMA 30 A H
R29(1)	VMA2	C2	68Ω	VMA2 VMA 31 A H
R112(1)	VMA2	D1	68Ω	VMA2 VMA 32 A H
R111(1)	VMA2	D1	68Ω	VMA2 VMA 33 A H
R119(1)	VMA2	D1	68Ω	VMA2 VMA 34 A H
R118(1)	VMA2	C1	68Ω	VMA2 VMA 35 A H
R58(1)	VMA3	C7	68Ω	VMA3 ADR BRK 13 H
R60(1)	VMA3	C7	68Ω	VMA3 ADR BRK 14 H
R59(1)	VMA3	C7	68Ω	VMA3 ADR BRK 15 H
R48(1)	VMA3	C6	68Ω	VMA3 ADR BRK 16 H
R50(1)	VMA3	C6	68Ω	VMA3 ADR BRK 17 H
R47(1)	VMA3	C6	68Ω	VMA3 ADR BRK 18 H
R49(1)	VMA3	C6	68Ω	VMA3 ADR BRK 19 H
R19(1)	VMA3	C5	68Ω	VMA3 ADR BRK 20 H
R15(1)	VMA3	C5	68Ω	VMA3 ADR BRK 21 H
R14(1)	VMA3	C5	68Ω	VMA3 ADR BRK 22 H
R16(1)	VMA3	C5	68Ω	VMA3 ADR BRK 23 H
R108(1)	VMA3	C4	68Ω	VMA3 ADR BRK 24 H
R105(1)	VMA3	C4	68Ω	VMA3 ADR BRK 25 H
R106(1)	VMA3	C4	68Ω	VMA3 ADR BRK 26 H
R107(1)	VMA3	C4	68Ω	VMA3 ADR BRK 27 H
R71(1)	VMA3	C2	68Ω	VMA3 ADR BRK 28 H
R70(1)	VMA3	C2	68Ω	VMA3 ADR BRK 29 H
R68(1)	VMA3	C2	68Ω	VMA3 ADR BRK 30 H
R69(1)	VMA3	C2	68Ω	VMA3 ADR BRK 31 H
R115(1)	VMA3	C1	68Ω	VMA3 ADR BRK 32 H
R114(1)	VMA3	C1	68Ω	VMA3 ADR BRK 33 H
R110(1)	VMA3	C1	68Ω	VMA3 ADR BRK 34 H
R113(1)	VMA3	C1	68Ω	VMA3 ADR BRK 35 H
R98(1)	VMA3	D7	68Ω	-VMA3 MATCH 13-19 H
R20(1)	VMA3	D6	68Ω	-VMA3 MATCH 16-19 H
R96(1)	VMA3	D5	68Ω	-VMA3 MATCH 20-23 H
R101(1)	VMA3	D3	68Ω	-VMA3 MATCH 24-27 H
R97(1)	VMA3	D2	68Ω	-VMA3 MATCH 28-31 H
R99(1)	VMA3	D2	68Ω	-VMA3 MATCH 32-35 H
R54(1)	VMA3	B7	68Ω	VMA3 PC 13 H
R55(1)	VMA3	B7	68Ω	VMA3 PC 14 H
R56(1)	VMA3	B7	68Ω	VMA3 PC 15 H

"THIS DRAWING AND SPECIFICATIONS, HEREIN, ARE THE PROPERTY OF DIGITAL EQUIPMENT CORPOR-TION AND SHALL NOT BE REPRODUCED OR COPIED OR USED IN WHOLE OR IN PART AS THE BASIS FOR THE MANUFACTURE OR SALE OF ITEMS WITHOUT WRITTEN PER!ISSION. COPYRIGHT © 1976, DIGITAL EQUIPMENT CORPORATION"

REVISIONS		
CHK	CHANGE NO.	REV

digital

DRN. C Smith DATE 19-SEP-76 ENG. Tom Eggers DATE 23 Sept 76 TITLE: VMA BOARD TERMINATORS

CHK. Tom Eggers DATE 23 Sept 76 BOARD LOCATION: SHEET 1 OF 2

M8541.RLS[4,161] 19-SEP-76 18:59 NEXT HIGHER ASSEMBLY: B-DD-M8542-0

FIRST USED ON OPTION/MODEL: KL10

SIZE	CODE	NUMBER	REV.
D	CS	M8542-0-RES	

362

MR

RESISTOR LOC(PIN)	SHOWN ON DRW#	REF	VALUE	TERMINATES SIGNAL
R42(1)	VMA3	B6	68Ω	VMA3 PC 16 H
R41(1)	VMA3	B6	68Ω	VMA3 PC 17 H
R175(1)	VMA3	B6	68Ω	VMA3 PC 18 H
R172(1)	VMA3	B6	68Ω	VMA3 PC 19 H
R206(1)	VMA3	B5	68Ω	VMA3 PC 20 H
R198(1)	VMA3	B5	68Ω	VMA3 PC 21 H
R200(1)	VMA3	B5	68Ω	VMA3 PC 22 H
R202(1)	VMA3	B5	68Ω	VMA3 PC 23 H
R27(1)	VMA3	B3	68Ω	VMA3 PC 24 H
R21(1)	VMA3	B3	68Ω	VMA3 PC 25 H
R22(1)	VMA3	B3	68Ω	VMA3 PC 26 H
R25(1)	VMA3	B3	68Ω	VMA3 PC 27 H
R128(1)	VMA3	B2	68Ω	VMA3 PC 28 H
R123(1)	VMA3	B2	68Ω	VMA3 PC 29 H
R75(1)	VMA3	B2	68Ω	VMA3 PC 30 H
R78(1)	VMA3	B2	68Ω	VMA3 PC 31 H
R169(1)	VMA3	B1	68Ω	VMA3 PC 32 H
R222(1)	VMA3	B1	68Ω	VMA3 PC 33 H
R218(1)	VMA3	B1	68Ω	VMA3 PC 34 H
R220(1)	VMA3	B1	68Ω	VMA3 PC 35 H
R52(1)	VMA4	C7	68Ω	VMA4 HELD 13 H
R51(1)	VMA4	C7	68Ω	VMA4 HELD 14 H
R53(1)	VMA4	C7	68Ω	VMA4 HELD 15 H
R43(1)	VMA4	C6	68Ω	VMA4 HELD 16 H
R44(1)	VMA4	C6	68Ω	VMA4 HELD 17 H
R39(1)	VMA4	C6	68Ω	VMA4 HELD 18 H
R40(1)	VMA4	C6	68Ω	VMA4 HELD 19 H
R199(1)	VMA4	C5	68Ω	VMA4 HELD 20 H
R194(1)	VMA4	C5	68Ω	VMA4 HELD 21 H
R195(1)	VMA4	C5	68Ω	VMA4 HELD 22 H
R196(1)	VMA4	C5	68Ω	VMA4 HELD 23 H
R61(1)	VMA4	C4	68Ω	VMA4 HELD 24 H
R62(1)	VMA4	C4	68Ω	VMA4 HELD 25 H
R28(1)	VMA4	C4	68Ω	VMA4 HELD 26 H
R26(1)	VMA4	C4	68Ω	VMA4 HELD 27 H
R67(1)	VMA4	C2	68Ω	VMA4 HELD 28 H
R66(1)	VMA4	C2	68Ω	VMA4 HELD 29 H
R65(1)	VMA4	C2	68Ω	VMA4 HELD 30 H
R64(1)	VMA4	C2	68Ω	VMA4 HELD 31 H
R77(1)	VMA4	C1	68Ω	VMA4 HELD 32 H

RESISTOR LOC(PIN)	SHOWN ON DRW#	REF	VALUE	TERMINATES SIGNAL
R76(1)	VMA4	C1	68Ω	VMA4 HELD 33 H
R73(1)	VMA4	C1	68Ω	VMA4 HELD 34 H
R74(1)	VMA4	C1	68Ω	VMA4 HELD 35 H
R83(1)	VMA4	A5	68Ω	VMA4 PREV SEC 13 H
R86(1)	VMA4	A5	68Ω	VMA4 PREV SEC 14 H
R85(1)	VMA4	A5	68Ω	VMA4 PREV SEC 15 H
R90(1)	VMA4	A3	68Ω	VMA4 PREV SEC 16 H
R94(1)	VMA4	A3	68Ω	VMA4 PREV SEC 16,17 H
R87(1)	VMA4	A3	68Ω	VMA4 PREV SEC 17 H
R137(1)	VMA4	B6	68Ω	VMA4 VMA 12 IN H
R3(1)	VMA4	B7	68Ω	-VMA4 VMAX EN H
R36(1)	VMA5	B5	68Ω	-VMA5 DATAO APR H
R193(1)	VMA5	B7	68Ω	VMA5 DIAG 04 H
R88(1)	VMA5	B7	68Ω	-VMA5 DIAG 04 H
R192(1)	VMA5	B7	68Ω	VMA5 DIAG 05 H
R91(1)	VMA5	B7	68Ω	-VMA5 DIAG 05 H
R191(1)	VMA5	B7	68Ω	VMA5 DIAG 06 H
R92(1)	VMA5	B7	68Ω	-VMA5 DIAG 06 H
R2(1)	VMA5	B5	68Ω	-VMA5 LOAD PC H
R1(1)	VMA5	B5	68Ω	-VMA5 LOAD VMA HELD H
R72(1)	VMA5	A7	68Ω	-VMA5 READ VMA H
R145(1)	VMA5	A5	68Ω	-VMA5 READ VMA A H

NOTE:

1. ALL TERMINATORS HAVE PIN TWO CONNECTED TO -2.0V AND ARE 5% 1/4WATT UNLESS OTHERWISE SPECIFIED
2. ENTRIES ARE SORTED BY SIGNAL NAME
3. % INDICATES OUTPUT OF DIP LOC AND
   ( ) INDICATES PIN NUMBER

"THIS DRAWING AND SPECIFICATIONS, HEREIN, ARE THE PROPERTY OF DIGITAL EQUIPMENT CORPORATION AND SHALL NOT BE REPRODUCED OR COPIED OR USED IN WHOLE OR IN PART AS THE BASIS FOR THE MANUFACTURE OR SALE OF ITEMS WITHOUT WRITTEN PERMISSION.
COPYRIGHT © 1976, DIGITAL EQUIPMENT CORPORATION"

REVISIONS		
CHK	CHANGE NO.	REV

digital

M8542Z.RLS[4,161] 19-SEP-76 18:59

FIRST USED ON OPTION/MODEL: KL10

DRN. C Smith DATE 19-SEP-76
CHKD. Tom Eggers DATE 23-Sept-76
ENG. Tom Eggers DATE 23-Sept-76
BOARD LOCATION:
SHEET 2 OF 2
NEXT HIGHER ASSEMBLY: B-DD-M8542-0

TITLE: VMA BOARD TERMINATORS

SIZE	CODE	NUMBER	REV.
D	CS	M8542-0-RES	

363

MP

SIZE	CODE	NUMBER	REV.
B	DD	M8543-Ø	

DRAWING NO.	NO. OF SHTS	PART NO.	DESCRIPTION	REVISIONS
			MODULE REVISION	A
D-UA-M8543-0-0	5		EBOX CONTROL #1	-
D-CS-M8543-0-CTL1	1		EBOX CONTROL #1 SPEC/FUNC & DIAG	-
D-CS-M8543-0-CTL2	1		EBOX CONTROL #1 DATA PATH CONTROL	-
D-CS-M8543-0-CTL3	1		EBOX CONTROL #1 CONSOLE FUNCTIONS	-
D-CS-M8543-0-CTL4	1		EBOX CONTROL #1 POWER, GND, CAPS	-
D-CS-M8543-0-RES	1		EBOX CONTROL #1 TERMINATORS	-
D-AH-M8543-0-5	4		EBOX CONTROL #1	-
		5011889	ETCH CIRCUIT BOARD	A
M8543-Ø-L			P.C. DESIGN DATA BASE	REF
M8543-0-PL			INSERTION P/L DATA BASE	REF
P00-M8543-0			PROCESS SHEET	REF

NOTES:

REVISIONS		
DATE	CHG NO.	REV.

"THIS DRAWING AND SPECIFICATIONS, HEREIN, ARE THE PROPERTY OF DIGITAL EQUIPMENT CORPORATION AND SHALL NOT BE REPRODUCED OR COPIED OR USED IN WHOLE OR IN PART AS THE BASIS FOR THE MANUFACTURE OR SALE OF ITEMS WITHOUT WRITTEN PERMISSION.
COPYRIGHT © 1977, DIGITAL EQUIPMENT CORPORATION"

digital

USED ON OPTION/MODEL
KL10

DRN.	RW Counter	26 JAN 77
CHK'D	[illegible]	26 JAN 77
ENG.	Tom Eggers	8 Feb 77
PROD.	W Embley	8 FEB 77

TITLE: E BOX CONTROL #1

SIZE	CODE	NUMBER	REV.
B	DD	M8543-Ø	

SHEET 1 OF 1

DRB 126 EN-01149-16-N176(325)

364

MR

THIS DRAWING AND SPECIFICATIONS, HEREIN, ARE THE PROPERTY OF DIGITAL EQUIPMENT CORPORATION AND SHALL NOT BE REPRODUCED OR COPIED OR USED IN WHOLE OR IN PART AS THE BASIS FOR THE MANUFACTURE OR SALE OF ITEMS WITHOUT WRITTEN PERMISSION.
COPYRIGHT © 1975 DIGITAL EQUIPMENT CORPORATION

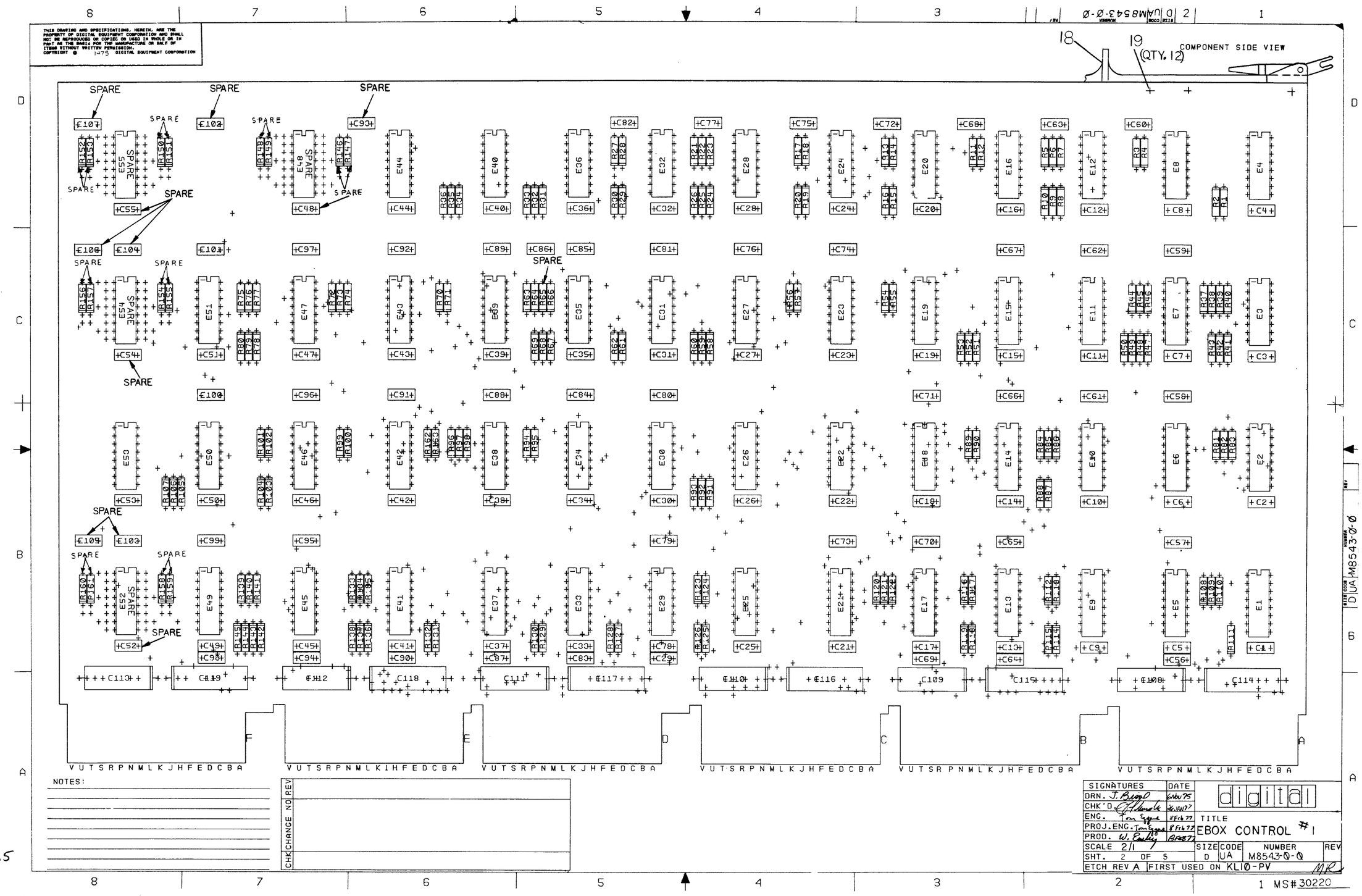

NOTES:

CHK	CHANGE NO	REV

SIGNATURES	DATE
DRN. J. Bragg	6 Feb 75
CHK'D	16 Feb 77
ENG. Tom Eggers	8 Feb 77
PROJ. ENG. Tom Eggers	8 Feb 77
PROD. W. Bailey	8 Feb 77
SCALE 2/1	
SHT. 2 OF 5	

digital

TITLE EBOX CONTROL #1

SIZE	CODE	NUMBER	REV
D	UA	M8543-0-0	

ETCH REV A FIRST USED ON KL10-PV

MR

MS#30220

365

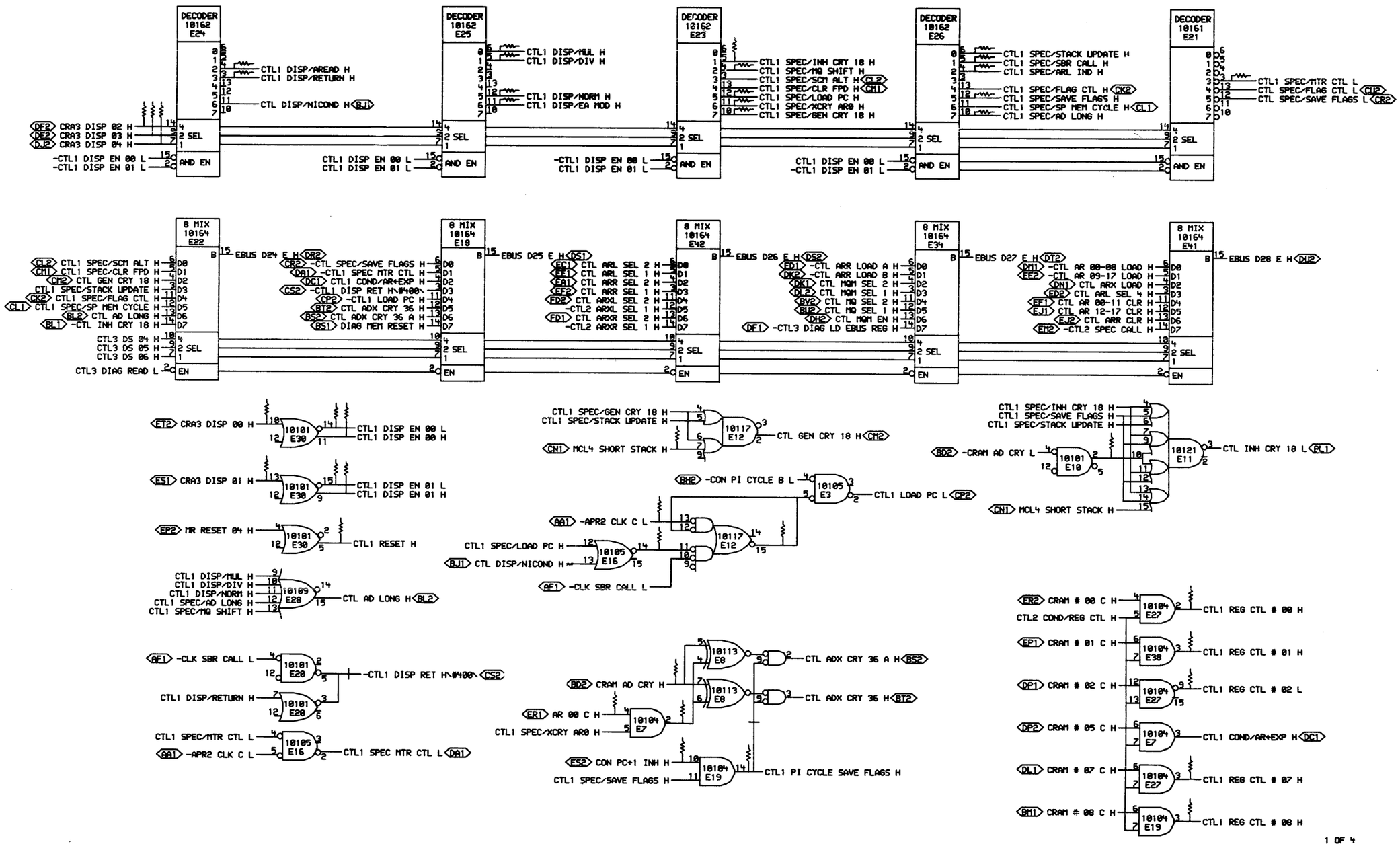

"THIS DRAWING AND SPECIFICATIONS, HEREIN, ARE THE PROPERTY OF DIGITAL EQUIPMENT CORPORATION AND SHALL NOT BE REPRODUCED OR COPIED OR USED IN WHOLE OR IN PART AS THE BASIS FOR THE MANUFACTURE OR SALE OF ITEMS WITHOUT WRITTEN PERMISSION. COPYRIGHT © 1977, DIGITAL EQUIPMENT CORPORATION"

REVISIONS		
CHK	CHANGE NO.	REV

digital

DRN: K. Lacosky DATE 25-JAN-77 ENG: Tom Egan DATE 25-Jan-77 TITLE: EBOX CONTROL #1 SPEC/FUNC & DIAG

CHK: Elizabeth Hanson DATE 1/25/77 BOARD LOCATION: 4AF36 SHEET 1 OF 1

CTL1EA.RLS(4,682) 24-JAN-77 21:28 NEXT HIGHER ASSEMBLY:

FIRST USED ON OPTION/MODEL: KL10-PV B-DD-M8543-0

SIZE	CODE	NUMBER	REV.
D	CS	M8543-0-CTL1	

366

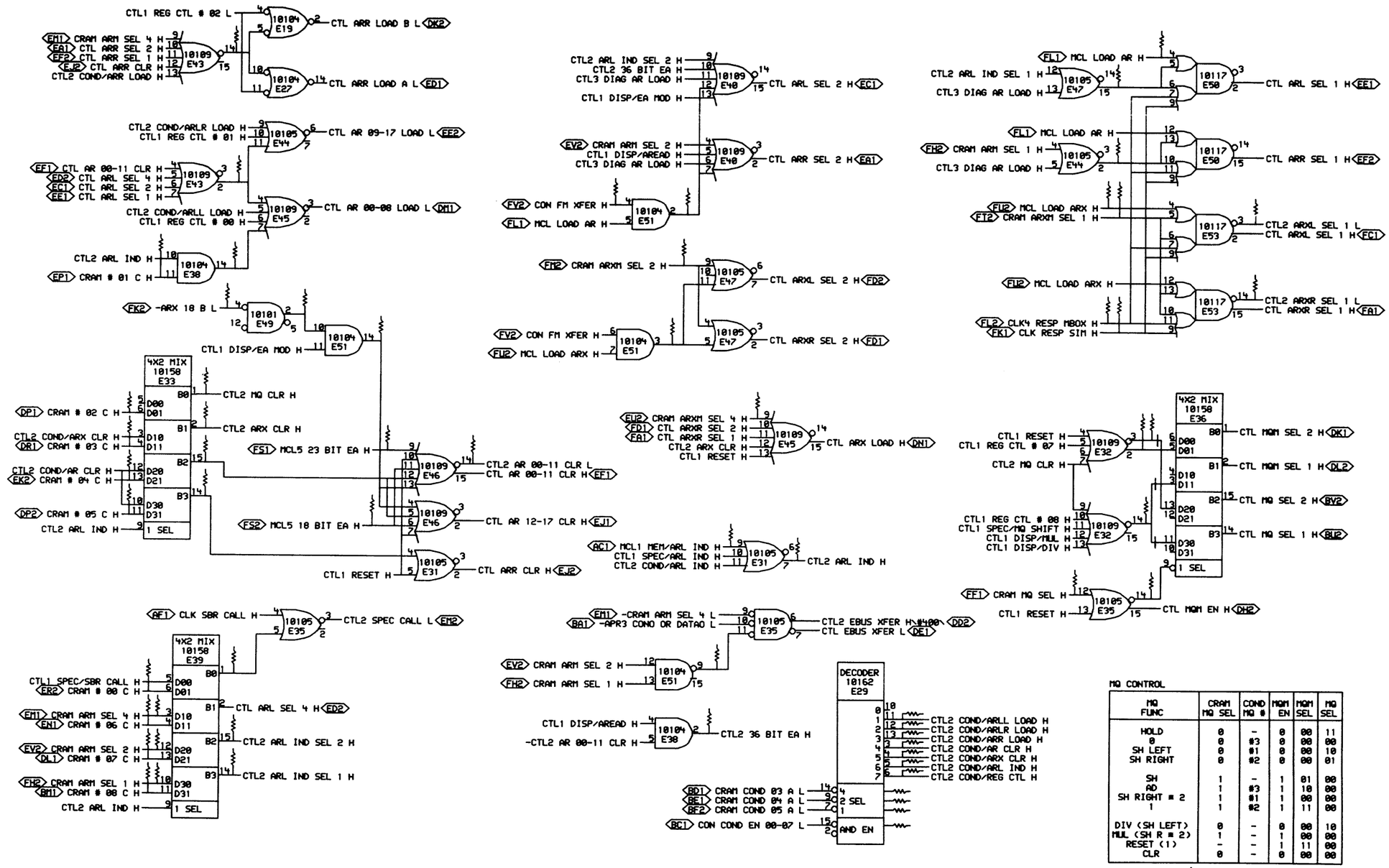

MQ CONTROL

MQ FUNC	CRAM MQ SEL	COND MQ #	MQM EN	MQM SEL	MQ SEL
HOLD	0	-	0	00	11
0	0	#3	0	00	00
SH LEFT	0	#1	0	00	10
SH RIGHT	0	#2	0	00	01
SH	1	-	1	01	00
AD	1	#3	1	10	00
SH RIGHT = 2	1	#1	1	00	00
1	1	#2	1	11	00
DIV (SH LEFT)	0	-	0	00	10
MUL (SH R = 2)	1	-	1	00	00
RESET (1)	-	-	1	11	00
CLR	0	-	0	00	00

2 OF 4

"THIS DRAWING AND SPECIFICATIONS, HEREIN, ARE THE PROPERTY OF DIGITAL EQUIPMENT CORPORATION AND SHALL NOT BE REPRODUCED OR COPIED OR USED IN WHOLE OR IN PART AS THE BASIS FOR THE MANUFACTURE OR SALE OF ITEMS WITHOUT WRITTEN PERMISSION.
COPYRIGHT © 1977, DIGITAL EQUIPMENT CORPORATION"

REVISIONS		
CHK	CHANGE NO.	REV

digital

DRW. | DATE 23-JAN-77 | ENG. | DATE 23-Jan-77
CHK | DATE 1/25/77 | BOARD LOCATION: 4AF36
SHEET 1 OF

CTL2EA.RLS(4,602) 24-JAN-77 21:19 | NEXT HIGHER ASSEMBLY:
FIRST USED ON OPTION/MODEL: KL10-PV | B-DD-M8543-0

TITLE: EBOX CONTROL #1
DATA PATH CONTROL

SIZE	CODE	NUMBER	REV.
D	CS	M8543-0-CTL2	

367

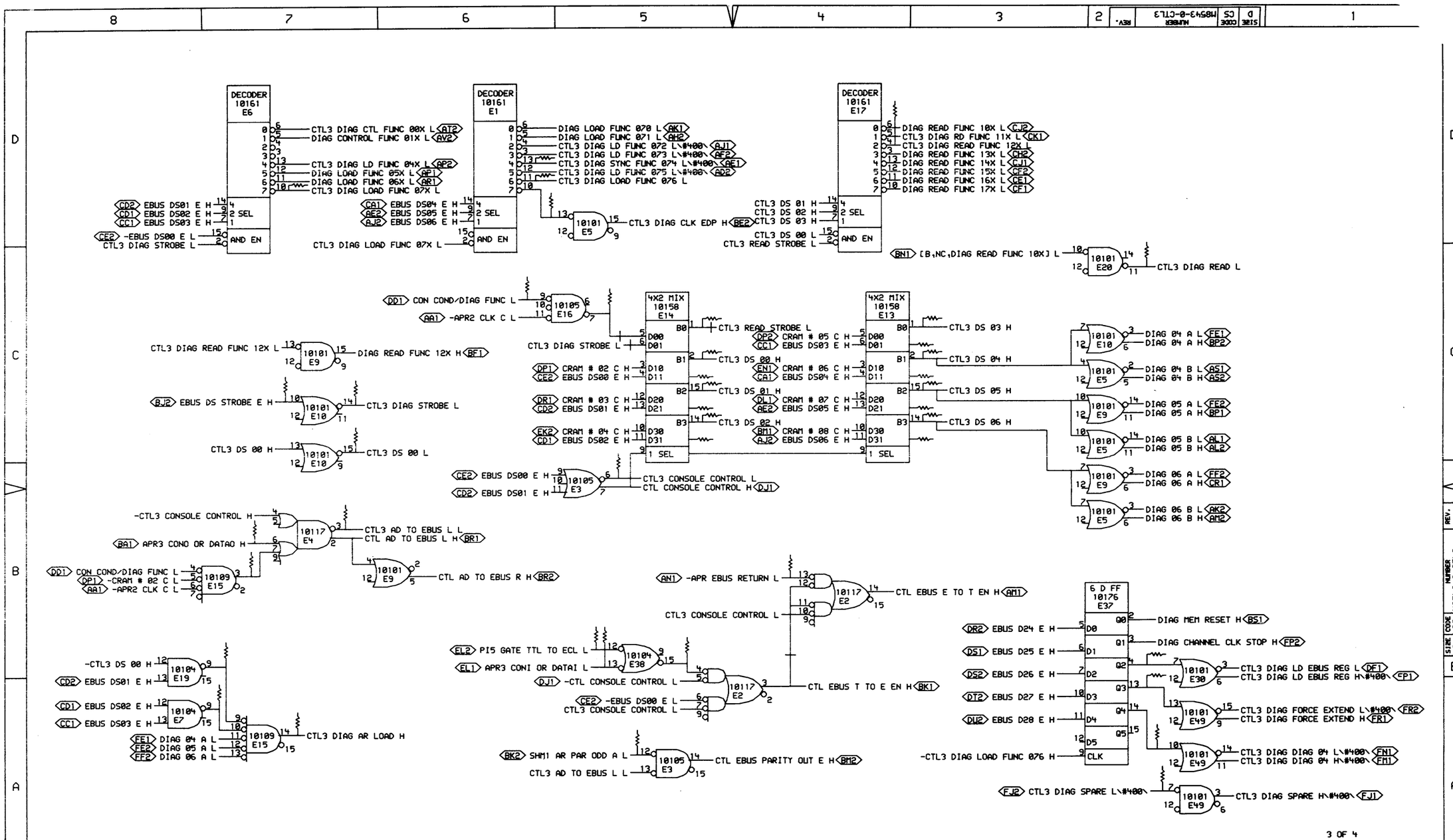

"THIS DRAWING AND SPECIFICATIONS, HEREIN, ARE THE PROPERTY OF DIGITAL EQUIPMENT CORPORATION AND SHALL NOT BE REPRODUCED OR COPIED OR USED IN WHOLE OR IN PART AS THE BASIS FOR THE MANUFACTURE OR SALE OF ITEMS WITHOUT WRITTEN PERMISSION. COPYRIGHT © 1977, DIGITAL EQUIPMENT CORPORATION"

REVISIONS		
CHK	CHANGE NO.	REV

digital

DRN. L. Loosly DATE 25-JAN-77 ENG. Tom Eggert DATE 25Jan77 TITLE: EBOX CONTROL #1 CONSOLE FUNCTIONS

CHK D. Stephenson DATE 1/25/77 BOARD LOCATION: 4AF36 SHEET 1 OF 1

CTL3EA.RLS[4,682] 24-JAN-77 21:58 NEXT HIGHER ASSEMBLY: B-DD-M8543-0

FIRST USED ON OPTION/MODEL: KL10-PV

SIZE	CODE	NUMBER	REV.
D	CS	M8543-0-CTL3	

368

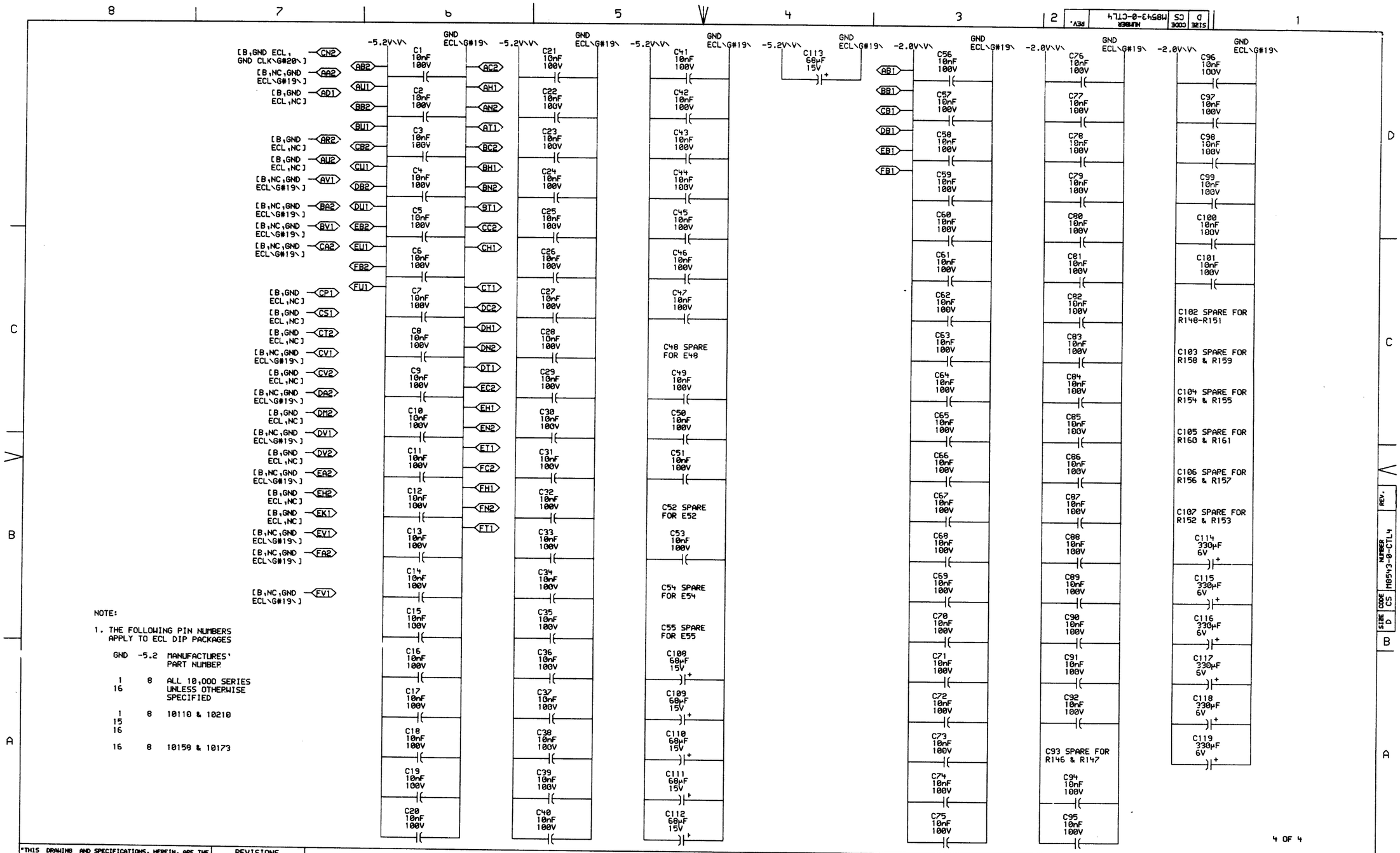

NOTE:

1. THE FOLLOWING PIN NUMBERS APPLY TO ECL DIP PACKAGES

GND	-5.2	
		MANUFACTURES' PART NUMBER
1 16	8	ALL 10,000 SERIES UNLESS OTHERWISE SPECIFIED
1 15 16	8	10110 & 10210
16	8	10158 & 10173

"THIS DRAWING AND SPECIFICATIONS, HEREIN, ARE THE PROPERTY OF DIGITAL EQUIPMENT CORPORATION AND SHALL NOT BE REPRODUCED OR COPIED OR USED IN WHOLE OR IN PART AS THE BASIS FOR THE MANUFACTURE OR SALE OF ITEMS WITHOUT WRITTEN PERMISSION.
COPYRIGHT © 1977, DIGITAL EQUIPMENT CORPORATION"

REVISIONS		
CHK	CHANGE NO.	REV

369

digital

DRN. B. Loomis DATE 25-JAN-77 ENG. Tom Egge DATE 25 Jan 77
CHK'D. D. Stephenson DATE 1/25/77 BOARD LOCATION: 4AF36 SHEET 1 OF 1
CTL4EA.RLS[4,602] 24-JAN-77 21:19 NEXT HIGHER ASSEMBLY:
FIRST USED ON OPTION/MODEL: KL10-PV B-DD-M8543-0

TITLE: EBOX CONTROL #1 POWER, GND, CAPS

SIZE	CODE	NUMBER	REV.
D	CS	M8543-0-CTL4	

RESISTOR LOC(PIN)	SHOWN ON DRW#	REF	VALUE	TERMINATES SIGNAL
R108(1)	CTL3	D5	68Ω	%E1(10)
R50(1)	CTL1	B2	68Ω	%E18(2)
R40(1)	CTL1	B4	68Ω	%E12(15)
R1(1)	CTL3	B7	68Ω	%E15(3)
R9(1)	CTL1	B5	68Ω	%E16(14)
R90(1)	CTL3	C5	68Ω	%E16(7)
R52(1)	CTL3	B7	68Ω	%E19(9)
R29(1)	CTL2	B2	68Ω	%E32(14)
R28(1)	CTL2	C2	68Ω	%E32(2)
R27(1)	CTL2	C2	68Ω	%E32(3)
R61(1)	CTL2	B7	68Ω	%E33(14)
R102(1)	CTL2	B7	68Ω	%E33(15)
R30(1)	CTL2	B2	68Ω	%E35(14)
R139(1)	CTL3	B2	68Ω	%E37(13)
R145(1)	CTL3	A2	68Ω	%E37(14)
R92(1)	CTL3	B2	68Ω	%E37(4)
R138(1)	CTL2	C7	68Ω	%E38(14)
R83(1)	CTL3	B5	68Ω	%E38(15)
R66(1)	CTL2	B7	68Ω	%E39(1)
R55(1)	CTL2	D7	68Ω	%E43(14)
R140(1)	CTL2	D7	68Ω	%E43(2)
R104(1)	CTL2	D2	68Ω	%E44(2)
R106(1)	CTL2	D2	68Ω	%E47(15)
R80(1)	CTL2	C7	68Ω	%E49(2)
R99(1)	CTL2	C6	68Ω	%E51(14)
R32(1)	CTL2	C5	68Ω	%E51(2)
R74(1)	CTL2	C5	68Ω	%E51(3)
R67(1)	CTL2	B4	68Ω	%E51(9)
R3(1)	CTL1	A5	68Ω	%E7(2)
R51(1)	CTL3	A7	68Ω	%E7(9)
R81(1)	CTL3	B4	68Ω	APR EBUS RETURN H
R5(1)	CTL1	B5	68Ω	APR2 CLK C H
R95(1)	CTL3	B5	68Ω	-APR3 CONI OR DATAI H
R62(1)	CTL3	B7	68Ω	APR3 CONO OR DATAO H
R45(1)	CTL1	A5	68Ω	AR 00 C H
R143(1)	CTL2	C7	68Ω	ARX 18 B H
R105(1)	CTL2	C2	68Ω	CLK RESP SIM H
R101(1)	CTL2	C2	68Ω	CLK4 RESP MBOX H
R124(1)	CTL2	A4	68Ω	-CON COND EN 00-07 H
R10(1)	CTL3	C6	68Ω	-CON COND/DIAG FUNC H

RESISTOR LOC(PIN)	SHOWN ON DRW#	REF	VALUE	TERMINATES SIGNAL
R76(1)	CTL2	D5	68Ω	CON FM XFER H
R53(1)	CTL1	A5	68Ω	CON PC+1 INH H
R93(1)	CTL1	B7	68Ω	CRA3 DISP 00 H
R91(1)	CTL1	B7	68Ω	CRA3 DISP 01 H
R13(1)	CTL1	D8	68Ω	CRA3 DISP 02 H
R16(1)	CTL1	D7	68Ω	CRA3 DISP 03 H
R19(1)	CTL1	D7	68Ω	CRA3 DISP 04 H
R56(1)	CTL2	A7	68Ω	CRAM # 00 C H
R94(1)	CTL2	C7	68Ω	CRAM # 01 C H
R89(1)	CTL2	C8	68Ω	CRAM # 02 C H
R84(1)	CTL2	B8	68Ω	CRAM # 03 C H
R88(1)	CTL2	B8	68Ω	CRAM # 04 C H
R48(1)	CTL2	B8	68Ω	CRAM # 05 C H
R117(1)	CTL2	A7	68Ω	CRAM # 06 C H
R112(1)	CTL2	A7	68Ω	CRAM # 07 C H
R63(1)	CTL2	A7	68Ω	CRAM # 08 C H
R4(1)	CTL1	A5	68Ω	CRAM AD CRY H
R69(1)	CTL2	A7	68Ω	CRAM ARM SEL 1 H
R34(1)	CTL2	A7	68Ω	CRAM ARM SEL 2 H
R68(1)	CTL2	A7	68Ω	CRAM ARM SEL 4 H
R107(1)	CTL2	D2	68Ω	CRAM ARXM SEL 1 H
R77(1)	CTL2	C5	68Ω	CRAM ARXM SEL 2 H
R137(1)	CTL2	C4	68Ω	CRAM ARXM SEL 4 H
R123(1)	CTL2	A4	68Ω	-CRAM COND 03 A H
R126(1)	CTL2	A4	68Ω	-CRAM COND 04 A H
R125(1)	CTL2	A4	68Ω	-CRAM COND 05 A H
R64(1)	CTL2	B3	68Ω	CRAM MQ SEL H
R14(1)	CTL1	B6	68Ω	CTL1 DISP EN 00 H
R120(1)	CTL1	B6	68Ω	-CTL1 DISP EN 00 H
R18(1)	CTL1	B6	68Ω	CTL1 DISP EN 01 H
R57(1)	CTL1	B6	68Ω	-CTL1 DISP EN 01 H
R96(1)	CTL1	D7	68Ω	CTL1 DISP/AREAD H
R23(1)	CTL1	D6	68Ω	CTL1 DISP/DIV H
R75(1)	CTL1	D6	68Ω	CTL1 DISP/EA MOD H
R21(1)	CTL1	D6	68Ω	CTL1 DISP/MUL H
R20(1)	CTL1	D6	68Ω	CTL1 DISP/NORM H
R15(1)	CTL1	D7	68Ω	CTL1 DISP/RETURN H
R2(1)	CTL1	A4	68Ω	CTL1 PI CYCLE SAVE FLAGS H
R142(1)	CTL1	B2	68Ω	CTL1 REG CTL # 00 H
R36(1)	CTL1	A2	68Ω	CTL1 REG CTL # 01 H

RESISTOR LOC(PIN)	SHOWN ON DRW#	REF	VALUE	TERMINATES SIGNAL
R54(1)	CTL1	A2	68Ω	-CTL1 REG CTL # 02 H
R22(1)	CTL1	A2	68Ω	CTL1 REG CTL # 07 H
R26(1)	CTL1	A2	68Ω	CTL1 REG CTL # 08 H
R134(1)	CTL1	B6	68Ω	CTL1 RESET H
R17(1)	CTL1	D3	68Ω	CTL1 SPEC/AD LONG H
R60(1)	CTL1	D3	68Ω	CTL1 SPEC/ARL IND H
R6(1)	CTL1	D4	68Ω	CTL1 SPEC/GEN CRY 18 H
R44(1)	CTL1	D4	68Ω	CTL1 SPEC/INH CRY 18 H
R12(1)	CTL1	D4	68Ω	CTL1 SPEC/LOAD PC H
R24(1)	CTL1	D4	68Ω	CTL1 SPEC/MQ SHIFT H
R11(1)	CTL1	D2	68Ω	-CTL1 SPEC/MTR CTL H
R49(1)	CTL1	D3	68Ω	CTL1 SPEC/SAVE FLAGS H
R71(1)	CTL1	D3	68Ω	CTL1 SPEC/SBR CALL H
R7(1)	CTL1	D3	68Ω	CTL1 SPEC/STACK UPDATE H
R46(1)	CTL1	D4	68Ω	CTL1 SPEC/XCRY AR0 H
R33(1)	CTL2	A5	68Ω	CTL2 36 BIT EA H
R98(1)	CTL2	B6	68Ω	-CTL2 AR 00-11 CLR H
R129(1)	CTL2	B4	68Ω	CTL2 ARL IND H
R72(1)	CTL2	A7	68Ω	CTL2 ARL IND SEL 1 H
R31(1)	CTL2	A7	68Ω	CTL2 ARL IND SEL 2 H
R133(1)	CTL2	C7	68Ω	CTL2 ARX CLR H
R162(1)	CTL2	C2	68Ω	-CTL2 ARXL SEL 1 H
R163(1)	CTL2	C2	68Ω	-CTL2 ARXR SEL 1 H
R128(1)	CTL2	A4	68Ω	CTL2 COND/AR CLR H
R58(1)	CTL2	A4	68Ω	CTL2 COND/ARL IND H
R141(1)	CTL2	A4	68Ω	CTL2 COND/ARLL LOAD H
R35(1)	CTL2	A4	68Ω	CTL2 COND/ARLR LOAD H
R70(1)	CTL2	A4	68Ω	CTL2 COND/ARR LOAD H
R127(1)	CTL2	A4	68Ω	CTL2 COND/ARX CLR H
R47(1)	CTL2	A4	68Ω	CTL2 COND/REG CTL H
R25(1)	CTL2	C7	68Ω	CTL2 MQ CLR H
R39(1)	CTL3	B7	68Ω	-CTL3 AD TO EBUS L H
R82(1)	CTL3	B5	68Ω	-CTL3 CONSOLE CONTROL H
R73(1)	CTL3	A7	68Ω	CTL3 DIAG AR LOAD H
R130(1)	CTL3	D6	68Ω	-CTL3 DIAG LOAD FUNC 076 H
R110(1)	CTL3	D7	68Ω	-CTL3 DIAG LOAD FUNC 07X H
R135(1)	CTL3	C2	68Ω	-CTL3 DIAG READ H
R113(1)	CTL3	D4	68Ω	-CTL3 DIAG READ FUNC 12X H
R144(1)	CTL3	A2	68Ω	CTL3 DIAG SPARE L\#400\
R85(1)	CTL3	C7	68Ω	-CTL3 DIAG STROBE H

RESISTOR LOC(PIN)	SHOWN ON DRW#	REF	VALUE	TERMINATES SIGNAL
R111(1)	CTL3	D6	68Ω	CTL3 DIAG SYNC FUNC 074 L\#400\
R86(1)	CTL3	C5	68Ω	CTL3 DS 00 H
R116(1)	CTL3	C7	68Ω	-CTL3 DS 00 H
R119(1)	CTL3	C5	68Ω	CTL3 DS 01 H
R118(1)	CTL3	C5	68Ω	CTL3 DS 02 H
R121(1)	CTL3	C3	68Ω	CTL3 DS 03 H
R132(1)	CTL3	C3	68Ω	CTL3 DS 04 H
R131(1)	CTL3	C3	68Ω	CTL3 DS 05 H
R136(1)	CTL3	C3	68Ω	CTL3 DS 06 H
R122(1)	CTL3	C5	68Ω	-CTL3 READ STROBE H
R87(1)	CTL3	C7	68Ω	EBUS DS STROBE E H
R42(1)	CTL3	C5	68Ω	EBUS DS00 E H
R41(1)	CTL3	C5	68Ω	EBUS DS01 E H
R37(1)	CTL3	C5	68Ω	EBUS DS02 E H
R38(1)	CTL3	C3	68Ω	EBUS DS03 E H
R109(1)	CTL3	C3	68Ω	EBUS DS04 E H
R115(1)	CTL3	C3	68Ω	EBUS DS05 E H
R114(1)	CTL3	C3	68Ω	EBUS DS06 E H
R78(1)	CTL2	D2	68Ω	MCL LOAD AR H
R79(1)	CTL2	D2	68Ω	MCL LOAD ARX H
R59(1)	CTL2	B4	68Ω	MCL1 MEM/ARL IND H
R8(1)	CTL1	B5	68Ω	MCL4 SHORT STACK H
R100(1)	CTL2	B6	68Ω	MCL5 18 BIT EA H
R103(1)	CTL2	B6	68Ω	MCL5 23 BIT EA H
R97(1)	CTL3	B5	68Ω	-P15 GATE TTL TO ECL H
R43(1)	CTL3	A5	68Ω	-SHM1 AR PAR ODD A H

NOTE:

1. ALL TERMINATORS HAVE PIN TWO CONNECTED TO -2.0V AND ARE 5% 1/4WATT UNLESS OTHERWISE SPECIFIED
2. ENTRIES ARE SORTED BY SIGNAL NAME
3. % INDICATES OUTPUT OF DIP LOC AND
   ( ) INDICATES PIN NUMBER

"THIS DRAWING AND SPECIFICATIONS, HEREIN, ARE THE PROPERTY OF DIGITAL EQUIPMENT CORPORATION AND SHALL NOT BE REPRODUCED OR COPIED OR USED IN WHOLE OR IN PART AS THE BASIS FOR THE MANUFACTURE OR SALE OF ITEMS WITHOUT WRITTEN PERMISSION.
COPYRIGHT © 1977, DIGITAL EQUIPMENT CORPORATION"

REVISIONS		
CHK	CHANGE NO.	REV

DRN. C Smith DATE 22-JAN-77 ENG. Tom Eggers DATE 25 Jan 77
CHK'D. Wilkinson DATE 1/25/77 BOARD LOCATION: SHEET 1 OF 1
M8543.RLS[4,6021] 22-JAN-77 15:36 NEXT HIGHER ASSEMBLY: B-DD-M8543-0
FIRST USED ON OPTION/MODEL: KL10PV

TITLE: EBOX CONTROL #1 TERMINATORS

SIZE	CODE	NUMBER	REV.
D	CS	M8543-0-RES	

350

SIZE	CODE	NUMBER	REV.
B	DD	M8544-Ø	

DRAWING NO.	NO. OF SHTS	PART NO.	DESCRIPTION	REVISIONS
			MODULE REVISION	A
D-UA-M8544-Ø-Ø	6		MEMORY CONTROL BOARD	-
D-CS-M8544-Ø-MCL1	1		MEMORY CONTROL MEM FIELD DECODE	-
D-CS-M8544-Ø-MCL2	1		MEMORY CONTROL VMA CYCLE FLAGS	-
D-CS-M8544-Ø-MCL3	1		MEMORY CONTROL VMA HELD FLAGS	-
D-CS-M8544-Ø-MCL4	1		MEMORY CONTROL VMA CONTROL	-
D-CS-M8544-Ø-MCL5	1		MEMORY CONTROL MBOX CYCLE REQ	-
D-CS-M8544-Ø-MCL6	1		MEMORY CONTROL MEM/AD FUNC	-
D-CS-M8544-Ø-MCL7	1		MEMORY CONTROL POWER, GND, CAPS	-
D-CS-M8544-Ø-RES	2		MEMORY CONTROL TERMINATORS	-
D-AH-M8544-Ø-5	4		MEMORY CONTROL BOARD	C
		5011913	ETCHED CIRCUIT BOARD	D
M8544-Ø-L			P.C. DESIGN DATA BASE	REF
M8544-Ø-PL			INSERTION P/L DATA BASE	REF
POO-M8544-ØØ			PROCESS SHEETS	REF

NOTES:

REVISIONS	REV.	CHG NO.	DATE
	ORIG		

"THIS DRAWING AND SPECIFICATIONS, HEREIN, ARE THE PROPERTY OF DIGITAL EQUIPMENT CORPORATION AND SHALL NOT BE REPRODUCED OR COPIED OR USED IN WHOLE OR IN PART AS THE BASIS FOR THE MANUFACTURE OR SALE OF ITEMS WITHOUT WRITTEN PERMISSION.
COPYRIGHT © 1977 DIGITAL EQUIPMENT CORPORATION"

digital

USED ON OPTION/MODEL
KL1Ø-PV

DRN.	Ken Gaunter	Jan 77
CHK'D.	M. Brault	17 FEB 77
ENG.	Tom Fugard	17 Feb 77
PROD.	Bill Emly	21 FEB 77

TITLE: MEMORY CONTROL BOARD

SIZE	CODE	NUMBER	REV.
B	DD	M8544-Ø	

SHEET 1 OF 1

371

DRB 126 EN-01149-16-N176(325)

MR

THIS DRAWING AND SPECIFICATIONS, HEREIN, ARE THE PROPERTY OF DIGITAL EQUIPMENT CORPORATION AND SHALL NOT BE REPRODUCED OR COPIED OR USED IN WHOLE OR IN PART AS THE BASIS FOR THE MANUFACTURE OR SALE OF ITEMS WITHOUT WRITTEN PERMISSION.
COPYRIGHT © 1976 DIGITAL EQUIPMENT CORPORATION

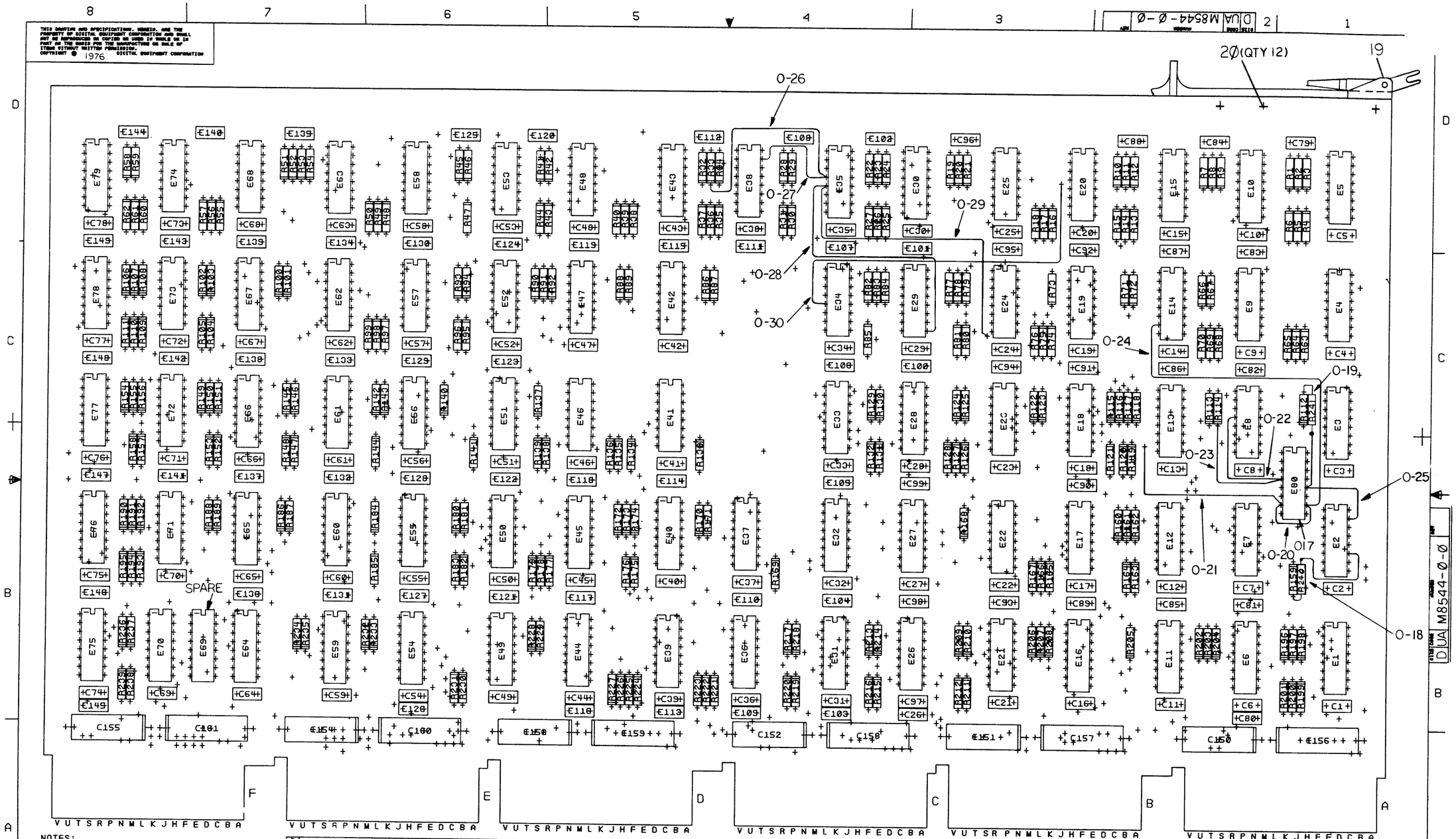

NOTES:

CHK	CHANGE NO	REV

SIGNATURES.	DATE
DRN. RW Counter	10DEC76
CHK'D. [illegible]	13DEC76
ENG. [illegible]	17Feb77
PROJ.ENG. Tom [illegible]	17Feb77
PROD. Bill [illegible]	21Feb77
SCALE 2/1	
SHT. 2 OF 6	
NEXT HIGHER ASSY. B-DD-M8544-0	

ETCH REV. D
P.C. DESIGN DATA BASE REV. D

digital

TITLE MEMORY CONTROL BOARD

SIZE	CODE	NUMBER	REV
D	UA	M8544-0-0	

MR 1 MS# 30231

372.

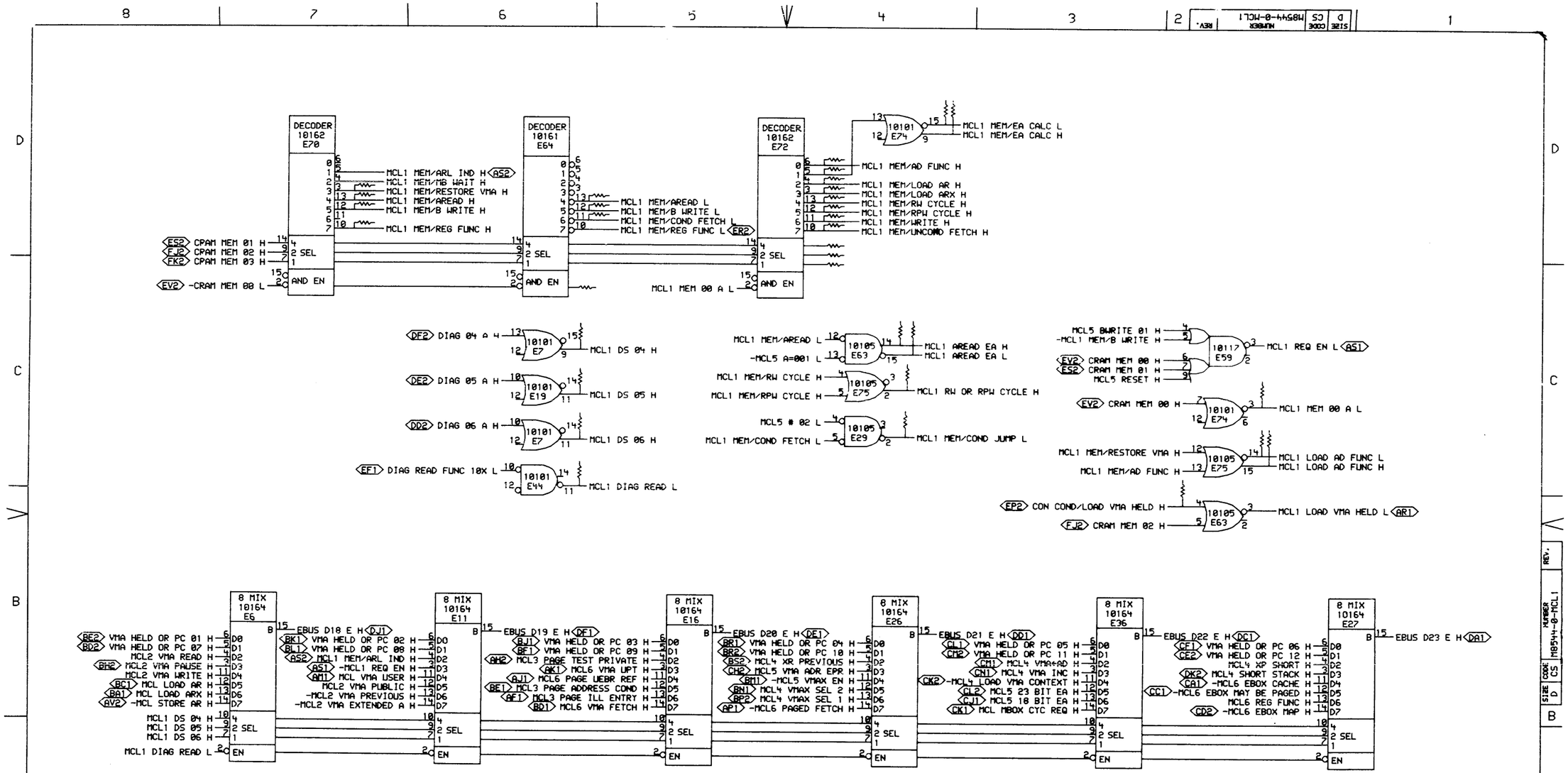

373

"THIS DRAWING AND SPEC... PROPERTY OF DIGITAL ... NOT BE REPRODUCED ... AS THE BA... WITHOUT ... HEREIN, ARE THE ...PATION AND SHALL ... IN WHOLE OR IN ...ACTURE OR SALE OF ...T CORPORATION"

REVISIONS		
CHK	CHANGE NO.	REV

digital

DRN. J. Loosley DATE 08-FEB-77
CHK. W. Hamner DATE 2/8/77
ENG. Tom Eggen DATE 8 Feb 77
BOARD LOCATION: 4A47
SHEET 1 OF 1
MCL1EC.RLS(4,603) 01-FEB-77 18:23
NEXT HIGHER ASSEMBLY: B-DD-M8544-0
FIRST USED ON OPTION/MODEL: KL10-PV

TITLE: MEMORY CONTROL MEM FIELD DECODE

SIZE	CODE	NUMBER	REV.
D	CS	M8544-0-MCL1	

MR

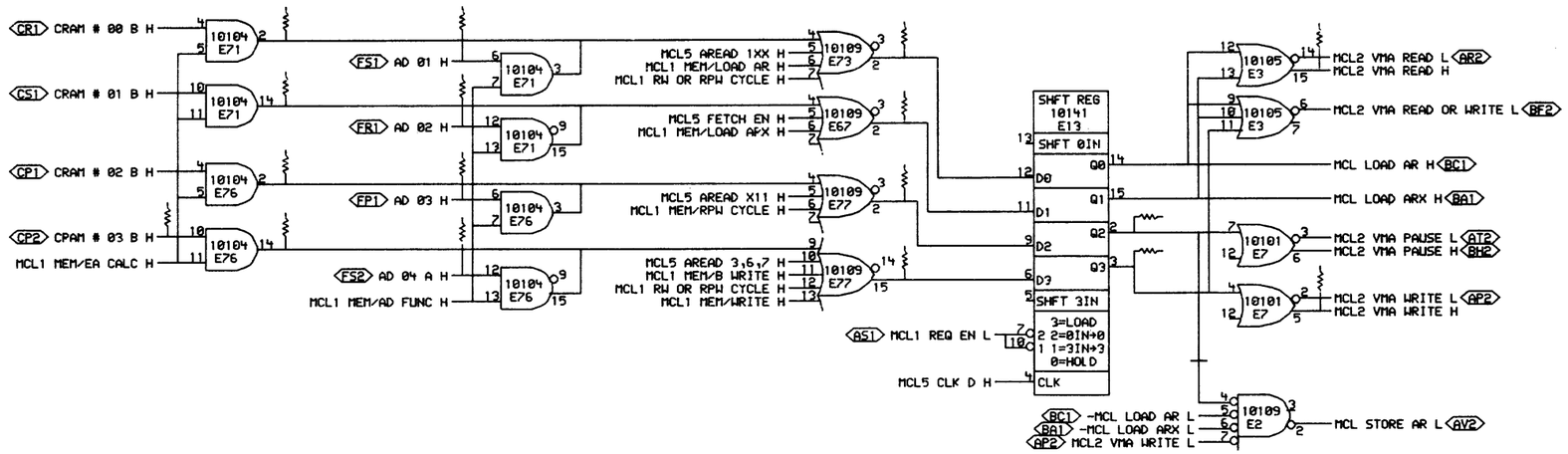

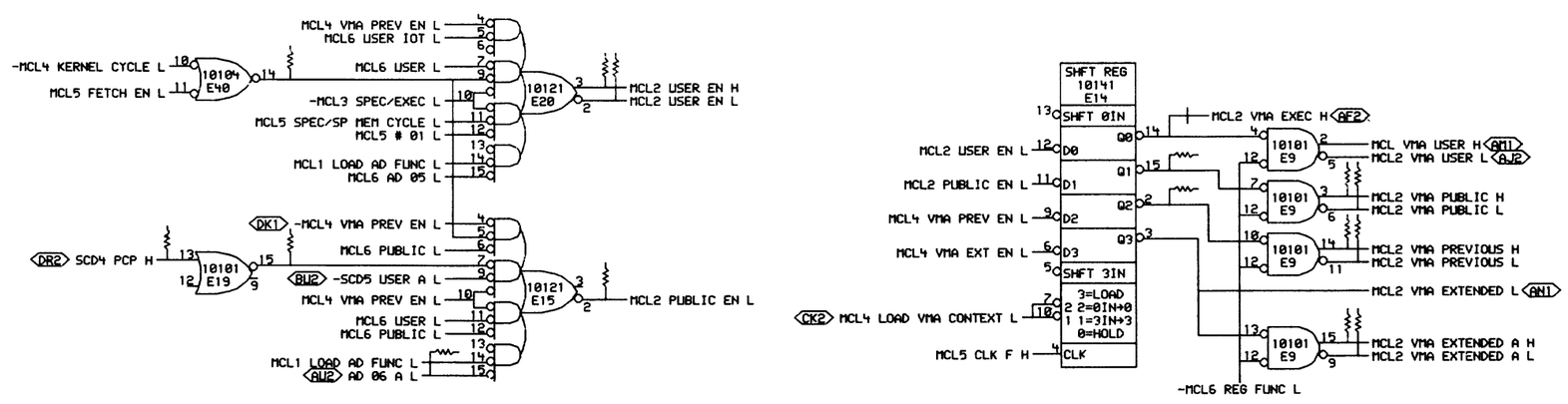

2 OF 7

"THIS DRAWING AND SPECIFICATIONS, HEREIN, ARE THE PROPERTY OF DIGITAL EQUIPMENT CORPORATION AND SHALL NOT BE REPRODUCED OR COPIED OR USED IN WHOLE OR IN PART AS THE BASIS FOR THE MANUFACTURE OR SALE OF ITEMS WITHOUT WRITTEN PERMISSION. COPYRIGHT © 1977, DIGITAL EQUIPMENT CORPORATION"

REVISIONS		
CHK	CHANGE NO.	REV

digital

DRN. J. Loomby DATE 08-FEB-77 ENG. Tom Eggers DATE 8 Feb 77
CHK'D. C. Stephenson DATE 2/8/77 BOARD LOCATION: 4AF47 SHEET 1 OF 1

MCL2EC.RLS[4,603] 27-JAN-77 09:00 NEXT HIGHER ASSEMBLY: B-DD-M8544-0
FIRST USED ON OPTION/MODEL: KL10-PV

TITLE: MEMORY CONTROL VMA CYCLE FLAGS

SIZE	CODE	NUMBER	REV.
D	CS	M8544-0-MCL2	

374

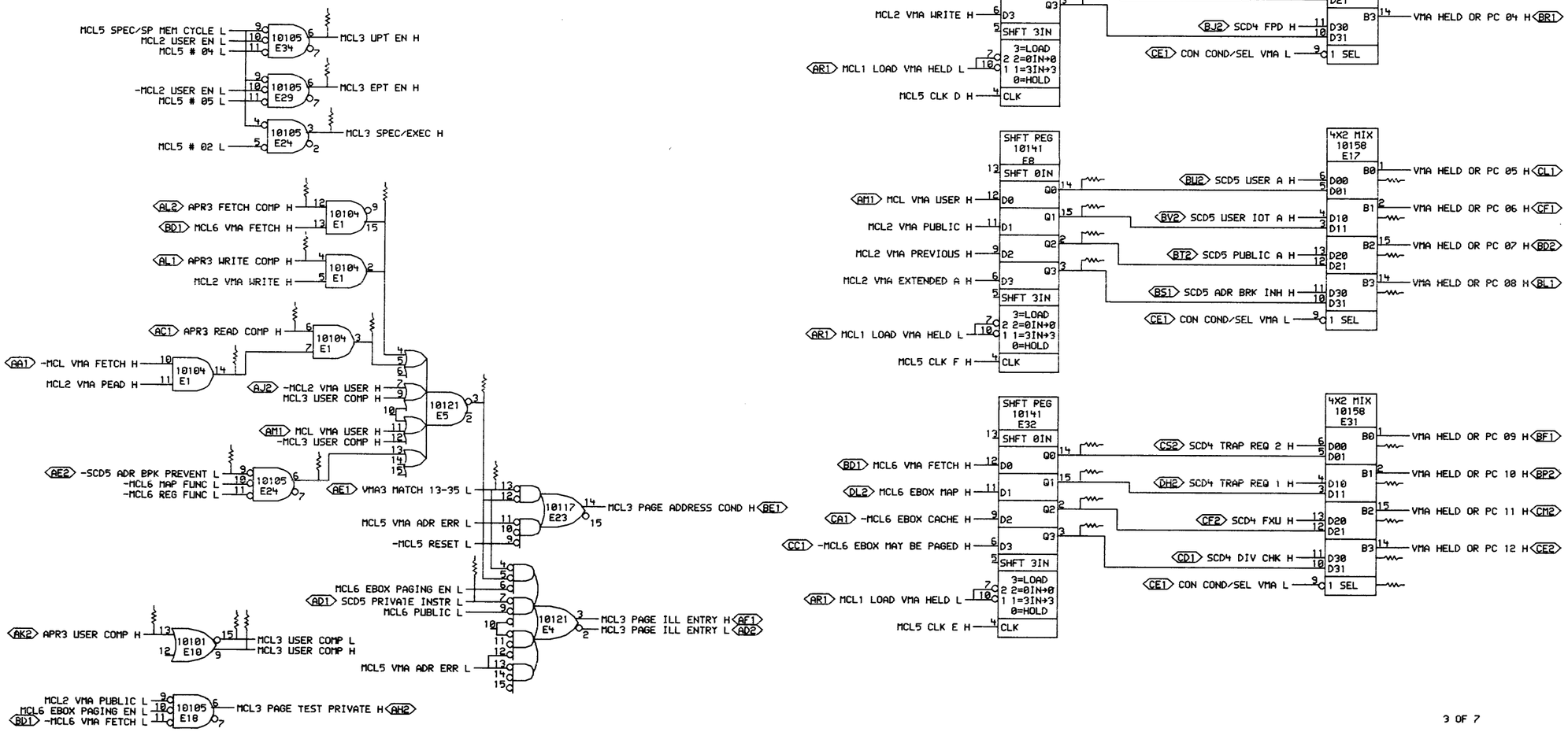

"THIS DRAWING AND SPECIFICATIONS, HEREIN, ARE THE PROPERTY OF DIGITAL EQUIPMENT CORPORATION AND SHALL NOT BE REPRODUCED OR COPIED OR USED IN WHOLE OR IN PART AS THE BASIS FOR THE MANUFACTURE OR SALE OF ITEMS WITHOUT WRITTEN PERMISSION. COPYRIGHT © 1977, DIGITAL EQUIPMENT CORPORATION"

REVISIONS		
CHK	CHANGE NO.	REV

digital

DRN. L. Loosky — DATE 08-FEB-77
CHKD. H. Stephenson — DATE 2/8/77
ENG. Tom Eggers — DATE 8 Feb 77
BOARD LOCATION: 4AF47
SHEET 1 OF 1
MCL3EC.RLSC4,6033 28-JAN-77 09:04 NEXT HIGHER ASSEMBLY:
FIRST USED ON OPTION/MODEL: KL10-PV B-DD-M8544-0

TITLE: MEMORY CONTROL VMA HELD FLAGS

SIZE	CODE	NUMBER	REV.
D	CS	M8544-0-MCL3	

375

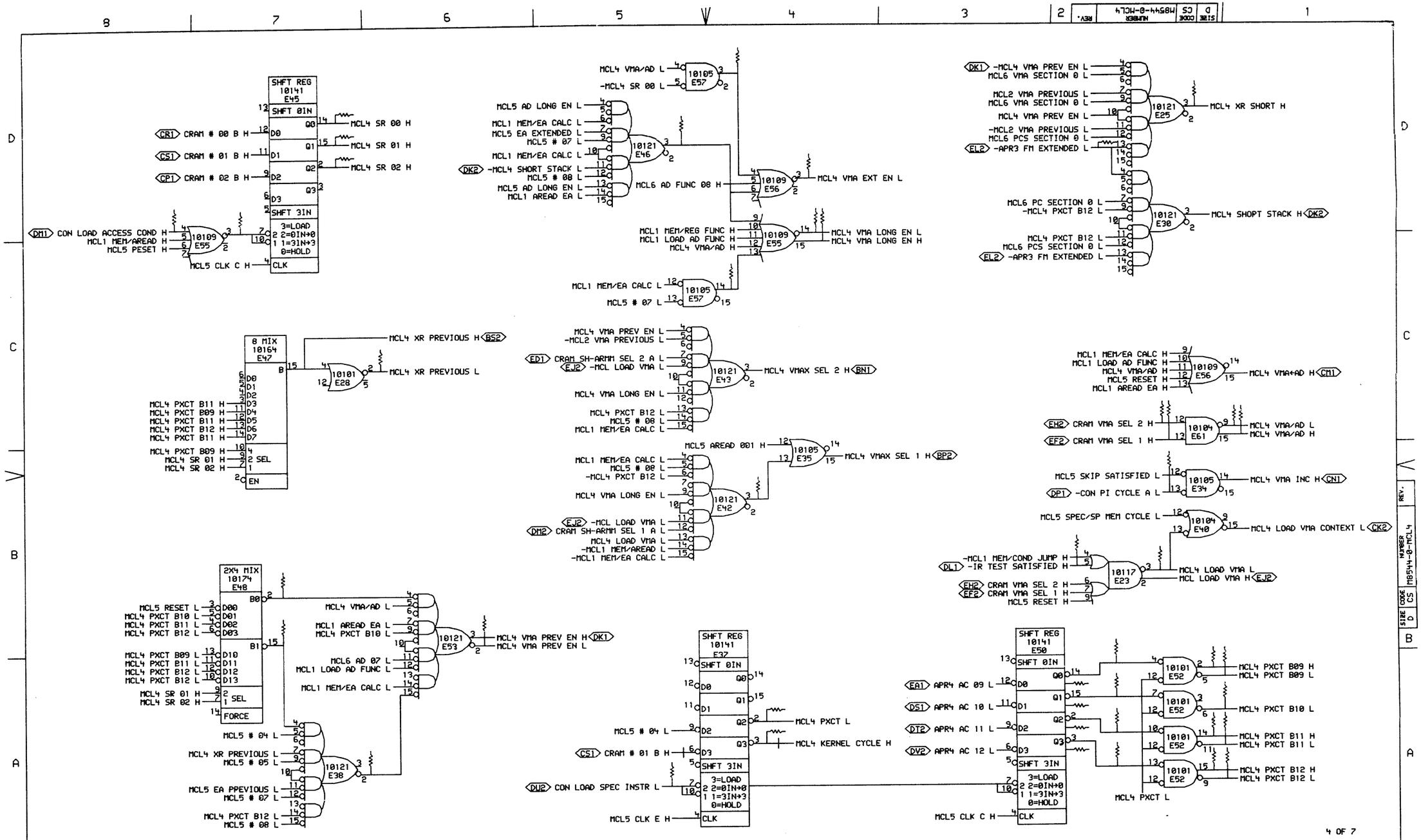

"THIS DRAWING AND SPECIFICATIONS, HEREIN, ARE THE PROPERTY OF DIGITAL EQUIPMENT CORPORATION AND SHALL NOT BE REPRODUCED OR COPIED OR USED IN WHOLE OR IN PART AS THE BASIS FOR THE MANUFACTURE OR SALE OF ITEMS WITHOUT WRITTEN PERMISSION.
COPYRIGHT © 1977, DIGITAL EQUIPMENT CORPORATION"

REVISIONS		
CHK	CHANGE NO.	REV

digital

DRAW. J. Stanley DATE 08-FEB-77
CHK D. Stephens DATE 2/8/77
ENG. Tom Segura DATE 8 Feb 77
MCL4EC.RLSC4,603J 27-JAN-77 09:36
BOARD LOCATION: 4AE42
SHEET 1 OF 1
FIRST USED ON OPTION/MODEL: KL10-PV
NEXT HIGHER ASSEMBLY: B-DD-M8544-0

TITLE: MEMORY CONTROL
VMA CONTROL

SIZE	CODE	NUMBER	REV
D	CS	M8544-0-MCL4	

376

MR

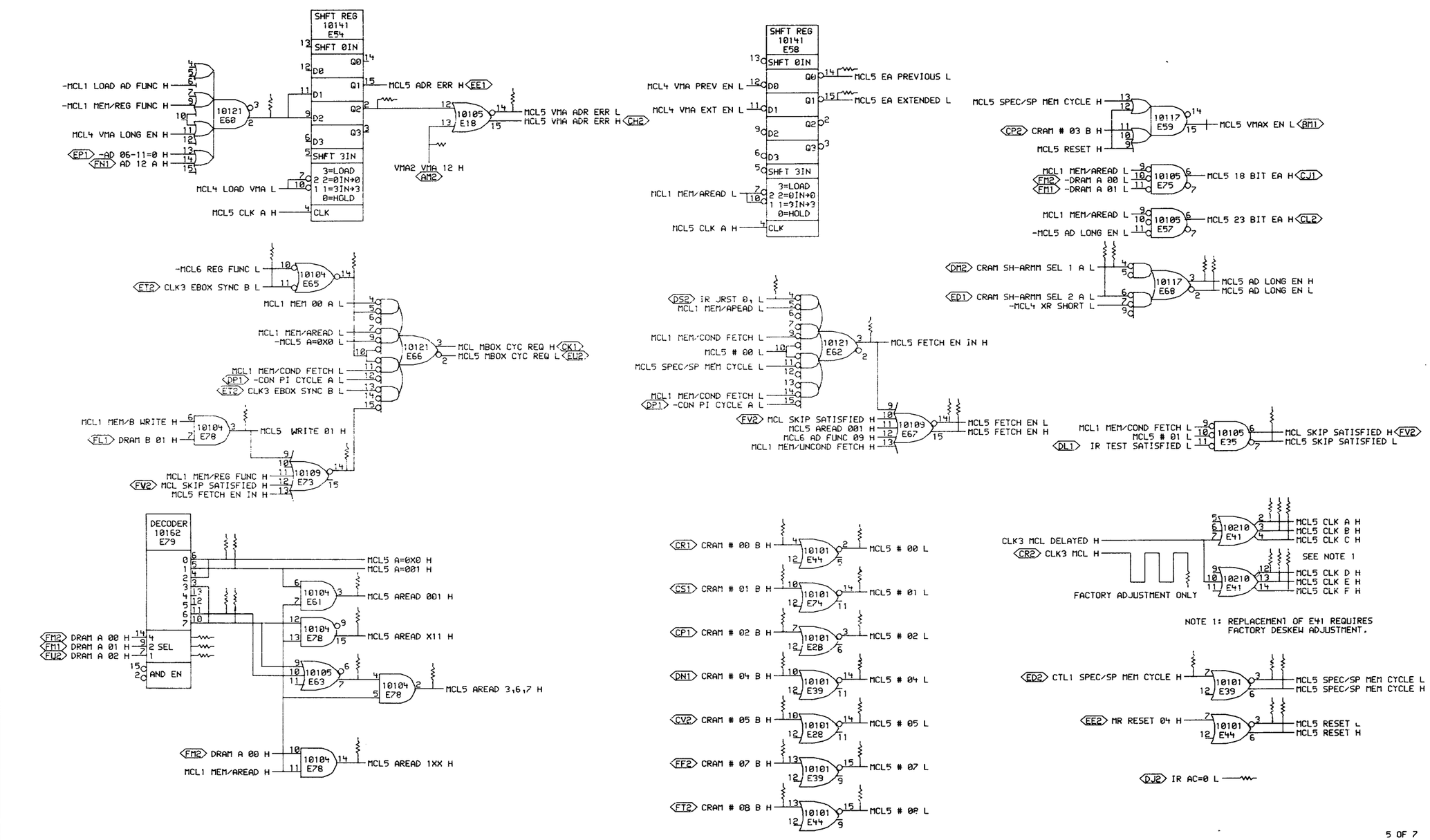

"THIS DRAWING AND SPECIFICATIONS, HEREIN, ARE THE PROPERTY OF DIGITAL EQUIPMENT CORPORATION AND SHALL NOT BE REPRODUCED OR COPIED OR USED IN WHOLE OR IN PART AS THE BASIS FOR THE MANUFACTURE OR SALE OF ITEMS WITHOUT WRITTEN PERMISSION.
COPYRIGHT © 1977, DIGITAL EQUIPMENT CORPORATION"

REVISIONS		
CHK	CHANGE NO.	REV

digital

DRN. L. Loosley DATE 08-FEB-77 ENG. Tom Eggers DATE 8 Feb 77
CHK. M. Stephens DATE 2/8/77 BOARD LOCATION: 4AE42
MCL5EC.RLSC4,6033 27-JAN-77 11:12 SHEET 1 OF 1
FIRST USED ON OPTION/MODEL: KL10-PV NEXT HIGHER ASSEMBLY: B-DD-M8544-0

TITLE: MEMORY CONTROL MBOX CYCLE REQ

SIZE	CODE	NUMBER	REV.
D	CS	M8544-0-MCL5	

377

MR

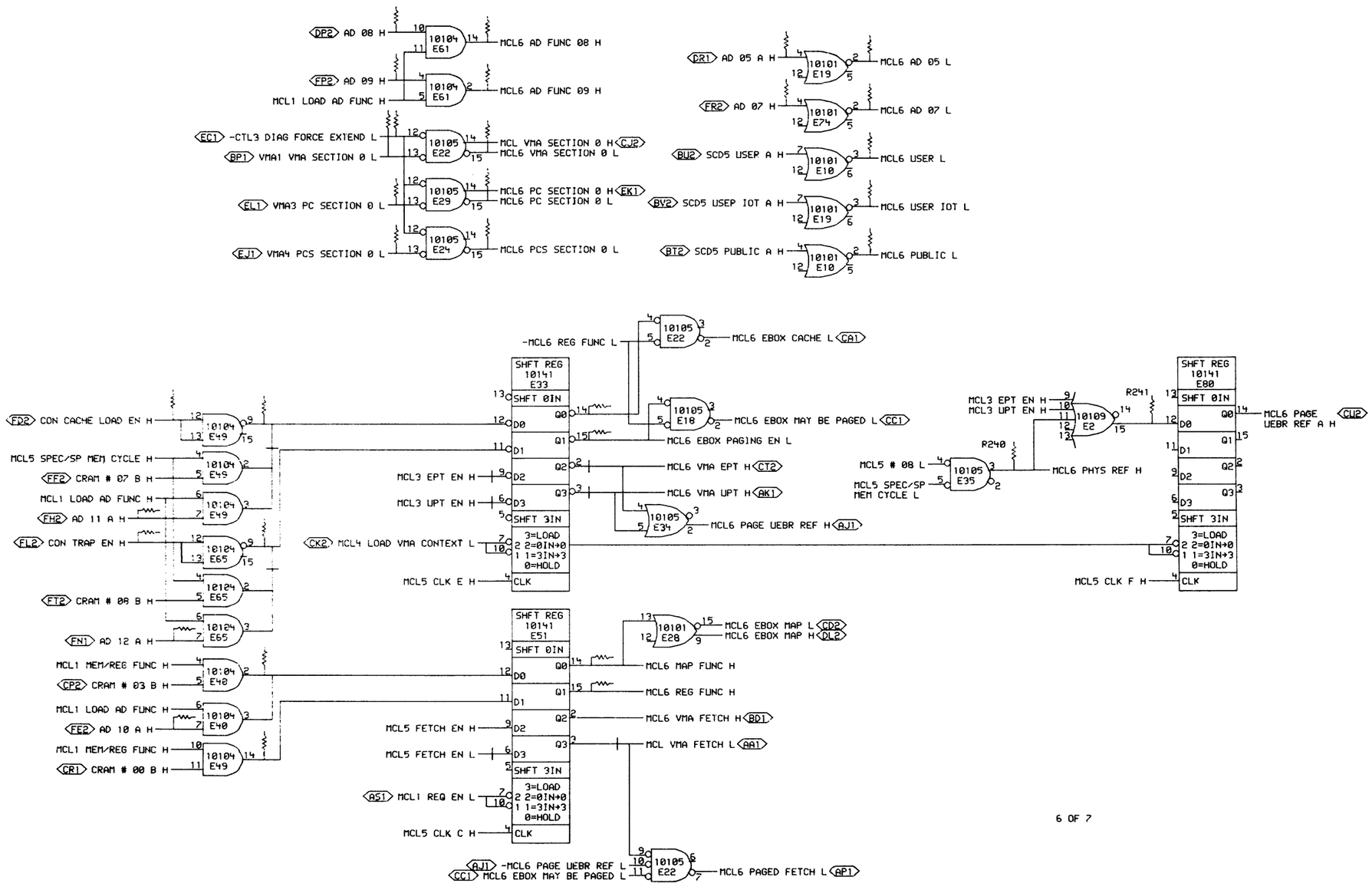

"THIS DRAWING AND SPECIFICATIONS, HEREIN, ARE THE PROPERTY OF DIGITAL EQUIPMENT CORPORATION AND SHALL NOT BE REPRODUCED OR COPIED OR USED IN WHOLE OR IN PART AS THE BASIS FOR THE MANUFACTURE OR SALE OF ITEMS WITHOUT WRITTEN PERMISSION.
COPYRIGHT © 1977, DIGITAL EQUIPMENT CORPORATION"

REVISIONS		
CHK	CHANGE NO.	REV

digital

DRN. L. Loosky DATE 08-FEB-77 ENG. Tom Egan DATE 2/8/77
CHK'D. A. Stephenson DATE 2/8/77 BOARD LOCATION: 4AF47 SHEET 1 OF 1
MCLGEC.RLS(4,603) 02-FEB-77 21:52 NEXT HIGHER ASSEMBLY:
FIRST USED ON OPTION/MODEL: KL10-PV B-DD-M8544-0

TITLE: MEMORY CONTROL MEM/AD FUNC

SIZE	CODE	NUMBER	REV.
D	CS	M8544-0-MCL6	

3'8

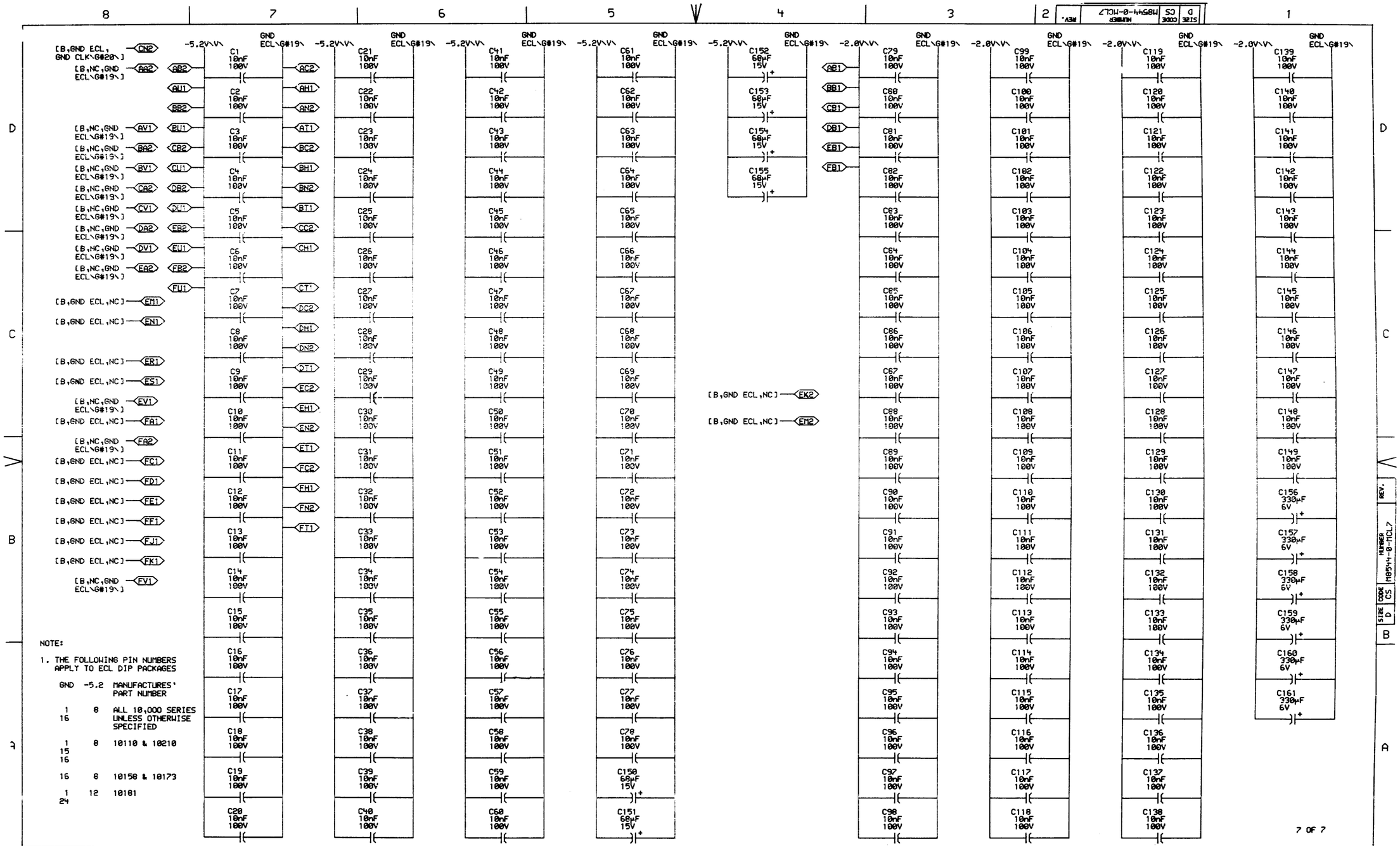
[B,GND ECL,NC] CN2
GND CLK\G#20\]
[B,NC,GND ECL\G#19\] AA2
AB2
AU1
BB2
[B,NC,GND ECL\G#19\] AV1
BU1
[B,NC,GND ECL\G#19\] BA2
CB2
[B,NC,GND ECL\G#19\] BV1
CU1
[B,NC,GND ECL\G#19\] CA2
DB2
[B,NC,GND ECL\G#19\] CV1
DU1
[B,NC,GND ECL\G#19\] DA2
EB2
[B,NC,GND ECL\G#19\] DV1
EU1
[B,NC,GND ECL\G#19\] EA2
FB2
FU1
[B,GND ECL,NC] EM1
[B,GND ECL,NC] EN1
[B,GND ECL,NC] ER1
[B,GND ECL,NC] ES1
[B,NC,GND ECL\G#19\] EV1
[B,GND ECL,NC] FA1
[B,NC,GND ECL\G#19\] FA2
[B,GND ECL,NC] FC1
[B,GND ECL,NC] FD1
[B,GND ECL,NC] FE1
[B,GND ECL,NC] FF1
[B,GND ECL,NC] FJ1
[B,GND ECL,NC] FK1
[B,NC,GND ECL\G#19\] FV1
AC2
AH1
AN2
AT1
BC2
BH1
BN2
BT1
CC2
CH1
CT1
DC2
DH1
DN2
DT1
EC2
EH1
EN2
ET1
FC2
FH1
FN2
FT1
-5.2V\V\
GND ECL\G#19\
C1 10nF 100V
C2 10nF 100V
C3 10nF 100V
C4 10nF 100V
C5 10nF 100V
C6 10nF 100V
C7 10nF 100V
C8 10nF 100V
C9 10nF 100V
C10 10nF 100V
C11 10nF 100V
C12 10nF 100V
C13 10nF 100V
C14 10nF 100V
C15 10nF 100V
C16 10nF 100V
C17 10nF 100V
C18 10nF 100V
C19 10nF 100V
C20 10nF 100V
C21 10nF 100V
C22 10nF 100V
C23 10nF 100V
C24 10nF 100V
C25 10nF 100V
C26 10nF 100V
C27 10nF 100V
C28 10nF 100V
C29 10nF 100V
C30 10nF 100V
C31 10nF 100V
C32 10nF 100V
C33 10nF 100V
C34 10nF 100V
C35 10nF 100V
C36 10nF 100V
C37 10nF 100V
C38 10nF 100V
C39 10nF 100V
C40 10nF 100V
C41 10nF 100V
C42 10nF 100V
C43 10nF 100V
C44 10nF 100V
C45 10nF 100V
C46 10nF 100V
C47 10nF 100V
C48 10nF 100V
C49 10nF 100V
C50 10nF 100V
C51 10nF 100V
C52 10nF 100V
C53 10nF 100V
C54 10nF 100V
C55 10nF 100V
C56 10nF 100V
C57 10nF 100V
C58 10nF 100V
C59 10nF 100V
C60 10nF 100V
C61 10nF 100V
C62 10nF 100V
C63 10nF 100V
C64 10nF 100V
C65 10nF 100V
C66 10nF 100V
C67 10nF 100V
C68 10nF 100V
C69 10nF 100V
C70 10nF 100V
C71 10nF 100V
C72 10nF 100V
C73 10nF 100V
C74 10nF 100V
C75 10nF 100V
C76 10nF 100V
C77 10nF 100V
C78 10nF 100V
C150 68µF 15V
C151 68µF 15V
C152 68µF 15V
C153 68µF 15V
C154 68µF 15V
C155 68µF 15V
[B,GND ECL,NC] EK2
[B,GND ECL,NC] EM2
-2.0V\V\
AB1
BB1
CB1
DB1
EB1
FB1
C79 10nF 100V
C80 10nF 100V
C81 10nF 100V
C82 10nF 100V
C83 10nF 100V
C84 10nF 100V
C85 10nF 100V
C86 10nF 100V
C87 10nF 100V
C88 10nF 100V
C89 10nF 100V
C90 10nF 100V
C91 10nF 100V
C92 10nF 100V
C93 10nF 100V
C94 10nF 100V
C95 10nF 100V
C96 10nF 100V
C97 10nF 100V
C98 10nF 100V
C99 10nF 100V
C100 10nF 100V
C101 10nF 100V
C102 10nF 100V
C103 10nF 100V
C104 10nF 100V
C105 10nF 100V
C106 10nF 100V
C107 10nF 100V
C108 10nF 100V
C109 10nF 100V
C110 10nF 100V
C111 10nF 100V
C112 10nF 100V
C113 10nF 100V
C114 10nF 100V
C115 10nF 100V
C116 10nF 100V
C117 10nF 100V
C118 10nF 100V
C119 10nF 100V
C120 10nF 100V
C121 10nF 100V
C122 10nF 100V
C123 10nF 100V
C124 10nF 100V
C125 10nF 100V
C126 10nF 100V
C127 10nF 100V
C128 10nF 100V
C129 10nF 100V
C130 10nF 100V
C131 10nF 100V
C132 10nF 100V
C133 10nF 100V
C134 10nF 100V
C135 10nF 100V
C136 10nF 100V
C137 10nF 100V
C138 10nF 100V
C139 10nF 100V
C140 10nF 100V
C141 10nF 100V
C142 10nF 100V
C143 10nF 100V
C144 10nF 100V
C145 10nF 100V
C146 10nF 100V
C147 10nF 100V
C148 10nF 100V
C149 10nF 100V
C156 330µF 6V
C157 330µF 6V
C158 330µF 6V
C159 330µF 6V
C160 330µF 6V
C161 330µF 6V
NOTE:
1. THE FOLLOWING PIN NUMBERS APPLY TO ECL DIP PACKAGES
GND -5.2 MANUFACTURES' PART NUMBER
1 16 8 ALL 10,000 SERIES UNLESS OTHERWISE SPECIFIED
1 15 16 8 10110 & 10210
16 8 10158 & 10173
1 24 12 10181
7 OF 7
"THIS DRAWING AND SPECIFICATIONS, HEREIN, ARE THE PROPERTY OF DIGITAL EQUIPMENT CORPORATION AND SHALL NOT BE REPRODUCED OR COPIED OR USED IN WHOLE OR IN PART AS THE BASIS FOR THE MANUFACTURE OR SALE OF ITEMS WITHOUT WRITTEN PERMISSION.
COPYRIGHT © 1977, DIGITAL EQUIPMENT CORPORATION"
REVISIONS
CHK CHANGE NO. REV
digital
DRN. 09-FEB-77
CHK. 2/8/77
ENG. 8 Feb 77
MCL7EC.RLSC4,6031 07-FEB-77 21:43
FIRST USED ON OPTION/MODEL: KL10-PV
NEXT HIGHER ASSEMBLY: B-DD-M8544-0
BOARD LOCATION: 4A42
SHEET 1 OF 1
TITLE: MEMORY CONTROL POWER, GND, CAPS
SIZE D CODE CS NUMBER M8544-0-MCL7 REV.
SIZE D CODE CS NUMBER M8544-0-MCL7 REV.

379

RESISTOR LOC(PIN)	SHOWN ON DRW#	REF	VALUE	TERMINATES SIGNAL
R199(1)	MCL3	B7	68Ω	%E1(14)
R2(1)	MCL3	C6	68Ω	%E1(2)
R3(1)	MCL3	B6	68Ω	%E1(3)
R210(1)	MCL3	D3	68Ω	%E12(14)
R209(1)	MCL3	D3	68Ω	%E12(15)
R206(1)	MCL3	D3	68Ω	%E12(2)
R208(1)	MCL3	D3	68Ω	%E12(3)
R159(1)	MCL2	C4	68Ω	%E13(2)
R112(1)	MCL2	C4	68Ω	%E13(3)
R68(1)	MCL2	B3	68Ω	%E14(15)
R69(1)	MCL2	B3	68Ω	%E14(2)
R13(1)	MCL2	A6	68Ω	%E19(15)
R241(1)	MCL6	C2	68Ω	%E2(15)
R1(1)	MCL3	B7	68Ω	%E24(6)
R218(1)	MCL3	B3	68Ω	%E32(14)
R219(1)	MCL3	B3	68Ω	%E32(15)
R213(1)	MCL3	B3	68Ω	%E32(2)
R216(1)	MCL3	B3	68Ω	%E32(3)
R168(1)	MCL6	C5	68Ω	%E33(14)
R41(1)	MCL4	A6	68Ω	%E38(2)
R12(1)	MCL2	B6	68Ω	%E40(14)
R137(1)	MCL6	B7	68Ω	%E40(2)
R23(1)	MCL4	B4	68Ω	%E42(3)
R183(1)	MCL4	D5	68Ω	%E46(3)
R34(1)	MCL4	B7	68Ω	%E48(15)
R45(1)	MCL4	B7	68Ω	%E48(2)
R139(1)	MCL6	A7	68Ω	%E49(14)
R129(1)	MCL6	C7	68Ω	%E49(2)
R122(1)	MCL3	B6	68Ω	%E5(3)
R94(1)	MCL4	A2	68Ω	%E50(14)
R95(1)	MCL4	A2	68Ω	%E50(15)
R91(1)	MCL4	A2	68Ω	%E50(2)
R92(1)	MCL4	A2	68Ω	%E50(3)
R121(1)	MCL5	D6	68Ω	%E54(2)
R176(1)	MCL4	D7	68Ω	%E55(3)
R181(1)	MCL4	C4	68Ω	%E57(14)
R142(1)	MCL4	D4	68Ω	%E57(3)
R231(1)	MCL5	D7	68Ω	%E60(2)
R186(1)	MCL5	A6	68Ω	%E63(7)
R151(1)	MCL5	C6	68Ω	%E65(14)

RESISTOR LOC(PIN)	SHOWN ON DRW#	REF	VALUE	TERMINATES SIGNAL
R132(1)	MCL6	B7	68Ω	%E65(2)
R117(1)	MCL2	D5	68Ω	%E67(2)
R103(1)	MCL2	D7	68Ω	%E71(14)
R107(1)	MCL2	D7	68Ω	%E71(2)
R56(1)	MCL1	D4	68Ω	%E72(5)
R145(1)	MCL5	B7	68Ω	%E73(14)
R118(1)	MCL2	D5	68Ω	%E73(2)
R157(1)	MCL2	C7	68Ω	%E76(14)
R156(1)	MCL2	D7	68Ω	%E76(2)
R116(1)	MCL2	C5	68Ω	%E77(15)
R119(1)	MCL2	D5	68Ω	%E77(2)
R50(1)	MCL5	B7	68Ω	%E79(11)
R49(1)	MCL5	B7	68Ω	%E79(3)
R163(1)	MCL3	C3	68Ω	%E8(14)
R161(1)	MCL3	C3	68Ω	%E8(15)
R160(1)	MCL3	C3	68Ω	%E8(2)
R164(1)	MCL3	C3	68Ω	%E8(3)
R193(1)	MCL2	D6	68Ω	AD 01 H
R188(1)	MCL2	D6	68Ω	AD 02 H
R194(1)	MCL2	D6	68Ω	AD 03 H
R190(1)	MCL2	C6	68Ω	AD 04 A H
R73(1)	MCL6	D4	68Ω	AD 05 A H
R7(1)	MCL2	A6	68Ω	-AD 06 A H
R59(1)	MCL6	D4	68Ω	AD 07 H
R144(1)	MCL6	D6	68Ω	AD 08 H
R146(1)	MCL6	D6	68Ω	AD 09 H
R175(1)	MCL6	A7	68Ω	AD 10 A H
R230(1)	MCL6	B7	68Ω	AD 11 A H
R187(1)	MCL6	B7	68Ω	AD 12 A H
R201(1)	MCL3	C7	68Ω	APR3 FETCH COMP H
R20(1)	MCL4	D2	68Ω	APR3 FM EXTENDED H
R200(1)	MCL3	B7	68Ω	APR3 READ COMP H
R6(1)	MCL3	A7	68Ω	APR3 USER COMP H
R197(1)	MCL3	C7	68Ω	APR3 WRITE COMP H
R177(1)	MCL4	A2	68Ω	-APR4 AC 09 H
R178(1)	MCL4	A2	68Ω	-APR4 AC 10 H
R179(1)	MCL4	A2	68Ω	-APR4 AC 11 H
R182(1)	MCL4	A2	68Ω	-APR4 AC 12 H
R148(1)	MCL5	C7	68Ω	-CLK3 EBOX SYNC B H
R133(1)	MCL5	B2	68Ω	CLK3 MCL H

RESISTOR LOC(PIN)	SHOWN ON DRW#	REF	VALUE	TERMINATES SIGNAL
R228(1)	MCL6	C7	68Ω	CON CACHE LOAD EN H
R53(1)	MCL1	B2	68Ω	CON COND/LOAD VMA HELD H
R166(1)	MCL3	A2	68Ω	-CON COND/SEL VMA H
R184(1)	MCL4	D8	68Ω	CON LOAD ACCESS COND H
R169(1)	MCL4	A5	68Ω	-CON LOAD SPEC INSTR H
R83(1)	MCL4	B2	68Ω	CON PI CYCLE A H
R186(1)	MCL6	B7	68Ω	CON TRAP EN H
R192(1)	MCL5	B4	68Ω	CRAM # 00 B H
R57(1)	MCL5	B4	68Ω	CRAM # 01 B H
R191(1)	MCL5	B4	68Ω	CRAM # 02 B H
R195(1)	MCL2	C7	68Ω	CRAM # 03 B H
R225(1)	MCL5	A4	68Ω	CRAM # 04 B H
R128(1)	MCL5	A4	68Ω	CRAM # 05 B H
R226(1)	MCL5	A4	68Ω	CRAM # 07 B H
R229(1)	MCL5	A4	68Ω	CRAM # 08 B H
R60(1)	MCL1	C6	68Ω	CRAM MEM 00 H
R149(1)	MCL1	D4	68Ω	CRAM MEM 01 H
R54(1)	MCL1	C4	68Ω	CRAM MEM 02 H
R153(1)	MCL1	C4	68Ω	CRAM MEM 03 H
R52(1)	MCL5	C2	68Ω	-CRAM SH-ARMM SEL 1 A H
R51(1)	MCL5	C2	68Ω	-CRAM SH-ARMM SEL 2 A H
R126(1)	MCL4	C2	68Ω	CRAM VMA SEL 1 H
R127(1)	MCL4	C2	68Ω	CRAM VMA SEL 2 H
R224(1)	MCL5	A2	68Ω	CTL1 SPEC/SP MEM CYCLE H
R88(1)	MCL6	D6	68Ω	CTL3 DIAG FORCE EXTEND H
R58(1)	MCL5	B7	68Ω	DRAM A 00 H
R61(1)	MCL5	B7	68Ω	DRAM A 01 H
R62(1)	MCL5	A7	68Ω	DRAM A 02 H
R227(1)	MCL5	A2	68Ω	-IR AC=0 H
R97(1)	MCL5	C4	68Ω	-IR JRST 0, H
R27(1)	MCL4	B2	68Ω	-IR TEST SATISFIED H
R140(1)	MCL1	C4	68Ω	MCL1 AREAD EA H
R135(1)	MCL1	C4	68Ω	-MCL1 AREAD EA H
R204(1)	MCL1	C6	68Ω	-MCL1 DIAG READ H
R223(1)	MCL1	C6	68Ω	MCL1 DS 04 H
R222(1)	MCL1	C6	68Ω	MCL1 DS 05 H
R221(1)	MCL1	C6	68Ω	MCL1 DS 06 H
R173(1)	MCL1	C2	68Ω	MCL1 LOAD AD FUNC H
R10(1)	MCL1	C2	68Ω	-MCL1 LOAD AD FUNC H
R150(1)	MCL1	C2	68Ω	-MCL1 MEM 00 A H

RESISTOR LOC(PIN)	SHOWN ON DRW#	REF	VALUE	TERMINATES SIGNAL
R238(1)	MCL1	D4	68Ω	MCL1 MEM/AD FUNC H
R86(1)	MCL1	D7	68Ω	MCL1 MEM/AREAD H
R48(1)	MCL1	D6	68Ω	-MCL1 MEM/AREAD H
R111(1)	MCL1	D7	68Ω	MCL1 MEM/B WRITE H
R235(1)	MCL1	D6	68Ω	-MCL1 MEM/B WRITE H
R84(1)	MCL1	D6	68Ω	-MCL1 MEM/COND FETCH H
R125(1)	MCL1	C4	68Ω	-MCL1 MEM/COND JUMP H
R87(1)	MCL1	D4	68Ω	MCL1 MEM/EA CALC H
R36(1)	MCL1	D4	68Ω	-MCL1 MEM/EA CALC H
R110(1)	MCL1	D4	68Ω	MCL1 MEM/LOAD AR H
R104(1)	MCL1	D4	68Ω	MCL1 MEM/LOAD ARX H
R105(1)	MCL1	D7	68Ω	MCL1 MEM/REG FUNC H
R236(1)	MCL1	D7	68Ω	MCL1 MEM/RESTORE VMA H
R239(1)	MCL1	D4	68Ω	MCL1 MEM/RPW CYCLE H
R237(1)	MCL1	D4	68Ω	MCL1 MEM/RW CYCLE H
R101(1)	MCL1	D4	68Ω	MCL1 MEM/UNCOND FETCH H
R155(1)	MCL1	D4	68Ω	MCL1 MEM/WRITE H
R109(1)	MCL1	C4	68Ω	MCL1 RW OR RPW CYCLE H
R66(1)	MCL2	A5	68Ω	-MCL2 PUBLIC EN H
R81(1)	MCL2	B5	68Ω	MCL2 USER EN H
R85(1)	MCL2	B5	68Ω	-MCL2 USER EN H
R113(1)	MCL2	A3	68Ω	MCL2 VMA EXTENDED A H
R203(1)	MCL2	A3	68Ω	-MCL2 VMA EXTENDED A H
R32(1)	MCL2	A3	68Ω	MCL2 VMA PREVIOUS H
R205(1)	MCL2	A3	68Ω	-MCL2 VMA PREVIOUS H
R202(1)	MCL2	B3	68Ω	MCL2 VMA PUBLIC H
R120(1)	MCL2	B3	68Ω	-MCL2 VMA PUBLIC H
R196(1)	MCL2	D3	68Ω	MCL2 VMA READ H
R198(1)	MCL2	C3	68Ω	MCL2 VMA WRITE H
R131(1)	MCL3	C7	68Ω	MCL3 EPT EN H
R16(1)	MCL3	C7	68Ω	MCL3 SPEC/EXEC H
R130(1)	MCL3	D7	68Ω	MCL3 UPT EN H
R4(1)	MCL3	A7	68Ω	MCL3 USER COMP H
R5(1)	MCL3	A7	68Ω	-MCL3 USER COMP H
R170(1)	MCL4	A4	68Ω	MCL4 KERNEL CYCLE H
R232(1)	MCL4	B2	68Ω	-MCL4 LOAD VMA H
R90(1)	MCL4	A4	68Ω	-MCL4 PXCT H
R89(1)	MCL4	A2	68Ω	MCL4 PXCT B09 H
R40(1)	MCL4	A2	68Ω	-MCL4 PXCT B09 H
R42(1)	MCL4	A2	68Ω	-MCL4 PXCT B10 H

NOTE:

1. ALL TERMINATORS HAVE PIN TWO CONNECTED TO -2.0V AND ARE 5% 1/4WATT UNLESS OTHERWISE SPECIFIED
2. ENTRIES ARE SORTED BY SIGNAL NAME
3. % INDICATES OUTPUT OF DIP LOC AND () INDICATES PIN NUMBER

"THIS DRAWING AND SPECIFICATIONS, HEREIN, ARE THE PROPERTY OF DIGITAL EQUIPMENT CORPORATION AND SHALL NOT BE REPRODUCED OR COPIED OR USED IN WHOLE OR IN PART AS THE BASIS FOR THE MANUFACTURE OR SALE OF ITEMS WITHOUT WRITTEN PERMISSION.
COPYRIGHT © 1977, DIGITAL EQUIPMENT CORPORATION"

REVISIONS

CHK	CHANGE NO.	REV

digital

DRN. C. Smith DATE 07-FEB-77
CHK. D. Stephenson DATE 2/8/77
ENG. Tom Eggers DATE Feb 77
BOARD LOCATION:
SHEET 1 OF 2
M8541.RLSC4.6033 07-FEB-77 21:34
NEXT HIGHER ASSEMBLY: B-DD-M8544-0
FIRST USED ON OPTION/MODEL: KL10-PV

TITLE: MEMORY CONTROL TERMINATORS

SIZE	CODE	NUMBER	REV.
D	CS	M8544-0-RES	

380

RESISTOR LOC(PIN)	SHOWN ON DRW#	REF	VALUE	TERMINATES SIGNAL
R88(1)	MCL4	A2	68Ω	MCL4 PXCT B11 H
R44(1)	MCL4	A2	68Ω	-MCL4 PXCT B11 H
R26(1)	MCL4	A2	68Ω	MCL4 PXCT B12 H
R24(1)	MCL4	A2	68Ω	-MCL4 PXCT B12 H
R93(1)	MCL4	D7	68Ω	MCL4 SR 00 H
R39(1)	MCL4	D7	68Ω	MCL4 SR 01 H
R43(1)	MCL4	D7	68Ω	MCL4 SR 02 H
R72(1)	MCL4	D4	68Ω	-MCL4 VMA EXT EN H
R105(1)	MCL4	D4	68Ω	MCL4 VMA LONG EN H
R37(1)	MCL4	D4	68Ω	-MCL4 VMA LONG EN H
R70(1)	MCL4	B6	68Ω	-MCL4 VMA PREV EN H
R100(1)	MCL4	C1	68Ω	MCL4 VMA/AD H
R46(1)	MCL4	C1	68Ω	-MCL4 VMA/AD H
R31(1)	MCL4	C6	68Ω	-MCL4 XR PREVIOUS H
R55(1)	MCL4	D2	68Ω	MCL4 XR SHORT H
R99(1)	MCL5	B4	68Ω	-MCL5 # 00 H
R17(1)	MCL5	B4	68Ω	-MCL5 # 01 H
R79(1)	MCL5	B4	68Ω	-MCL5 # 02 H
R29(1)	MCL5	A4	68Ω	-MCL5 # 04 H
R30(1)	MCL5	A4	68Ω	-MCL5 # 05 H
R28(1)	MCL5	A4	68Ω	-MCL5 # 07 H
R33(1)	MCL5	A4	68Ω	-MCL5 # 08 H
R147(1)	MCL5	B7	68Ω	MCL5 A=001 H
R152(1)	MCL5	B7	68Ω	MCL5 A=0X0 H
R96(1)	MCL5	C2	68Ω	MCL5 AD LONG EN H
R136(1)	MCL5	C2	68Ω	-MCL5 AD LONG EN H
R22(1)	MCL5	B6	68Ω	MCL5 AREAD 001 H
R108(1)	MCL5	A6	68Ω	MCL5 AREAD 1XX H
R158(1)	MCL5	A6	68Ω	MCL5 AREAD 3,6,7 H
R154(1)	MCL5	B6	68Ω	MCL5 AREAD X11 H
R234(1)	MCL5	B7	68Ω	MCL5 BWRITE 01 H
R233(1)	MCL5	B2	68Ω	MCL5 CLK A H
R134(1)	MCL5	B2	68Ω	MCL5 CLK B H
R172(1)	MCL5	B1	68Ω	MCL5 CLK C H
R162(1)	MCL5	B2	68Ω	MCL5 CLK D H
R171(1)	MCL5	B2	68Ω	MCL5 CLK E H
R114(1)	MCL5	B1	68Ω	MCL5 CLK F H
R138(1)	MCL5	D4	68Ω	-MCL5 EA EXTENDED H
R35(1)	MCL5	D4	68Ω	-MCL5 EA PREVIOUS H
R141(1)	MCL5	C3	68Ω	MCL5 FETCH EN H

RESISTOR LOC(PIN)	SHOWN ON DRW#	REF	VALUE	TERMINATES SIGNAL
R174(1)	MCL5	C3	68Ω	-MCL5 FETCH EN H
R102(1)	MCL5	C4	68Ω	MCL5 FETCH EN IN H
R124(1)	MCL5	A2	68Ω	MCL5 RESET H
R38(1)	MCL5	A2	68Ω	-MCL5 RESET H
R82(1)	MCL5	B2	68Ω	-MCL5 SKIP SATISFIED H
R189(1)	MCL5	A2	68Ω	MCL5 SPEC/SP MEM CYCLE H
R98(1)	MCL5	A2	68Ω	-MCL5 SPEC/SP MEM CYCLE H
R65(1)	MCL5	D6	68Ω	-MCL5 VMA ADR ERR H
R11(1)	MCL6	D4	68Ω	-MCL6 AD 05 H
R47(1)	MCL6	D4	68Ω	-MCL6 AD 07 H
R143(1)	MCL6	D5	68Ω	MCL6 AD FUNC 08 H
R100(1)	MCL6	D5	68Ω	MCL6 AD FUNC 09 H
R64(1)	MCL6	C5	68Ω	-MCL6 EBOX PAGING EN H
R76(1)	MCL6	B5	68Ω	MCL6 MAP FUNC H
R25(1)	MCL6	C5	68Ω	-MCL6 PC SECTION 0 H
R19(1)	MCL6	C5	68Ω	-MCL6 PCS SECTION 0 H
R240(1)	MCL6	B3	68Ω	MCL6 PHYS REF H
R14(1)	MCL6	C4	68Ω	-MCL6 PUBLIC H
R67(1)	MCL6	B5	68Ω	MCL6 REG FUNC H
R15(1)	MCL6	D4	68Ω	-MCL6 USER H
R18(1)	MCL6	C4	68Ω	-MCL6 USER IOT H
R21(1)	MCL6	D5	68Ω	-MCL6 VMA SECTION 0 H
R211(1)	MCL3	D2	68Ω	SCD4 CRY0 H
R212(1)	MCL3	D2	68Ω	SCD4 CRY1 H
R215(1)	MCL3	A2	68Ω	SCD4 DIV CHK H
R207(1)	MCL3	D2	68Ω	SCD4 FOV H
R214(1)	MCL3	B2	68Ω	SCD4 FXU H
R71(1)	MCL2	A7	68Ω	SCD4 PCP H
R217(1)	MCL3	B2	68Ω	SCD4 TRAP REQ 1 H
R220(1)	MCL3	B2	68Ω	SCD4 TRAP REQ 2 H
R165(1)	MCL3	C2	68Ω	SCD5 ADR BRK INH H
R75(1)	MCL3	B7	68Ω	SCD5 ADR BRK PREVENT H
R63(1)	MCL3	A6	68Ω	-SCD5 PRIVATE INSTR H
R9(1)	MCL3	C2	68Ω	SCD5 PUBLIC A H
R8(1)	MCL3	C2	68Ω	SCD5 USER A H
R74(1)	MCL3	C2	68Ω	SCD5 USER IOT A H
R167(1)	MCL6	D6	68Ω	-VMA1 VMA SECTION 0 H
R115(1)	MCL5	D6	68Ω	VMA2 VMA 12 H
R123(1)	MCL3	B6	68Ω	-VMA3 MATCH 13-35 H
R77(1)	MCL6	C6	68Ω	-VMA3 PC SECTION 0 H

RESISTOR LOC(PIN)	SHOWN ON DRW#	REF	VALUE	TERMINATES SIGNAL
R78(1)	MCL6	C6	68Ω	-VMA4 PCS SECTION 0 H

NOTE:

1. ALL TERMINATORS HAVE PIN TWO CONNECTED TO -2.0V AND ARE 5% 1/4WATT UNLESS OTHERWISE SPECIFIED
2. ENTRIES ARE SORTED BY SIGNAL NAME
3. % INDICATES OUTPUT OF DIP LOC AND
   ( ) INDICATES PIN NUMBER

"THIS DRAWING AND SPECIFICATIONS, HEREIN, ARE THE PROPERTY OF DIGITAL EQUIPMENT CORPORATION AND SHALL NOT BE REPRODUCED OR COPIED OR USED IN WHOLE OR IN PART AS THE BASIS FOR THE MANUFACTURE OR SALE OF ITEMS WITHOUT WRITTEN PERMISSION.
COPYRIGHT © 1977, DIGITAL EQUIPMENT CORPORATION"

REVISIONS

CHK	CHANGE NO.	REV

digital

DRN. C Smith DATE 07-FEB-77
CHK'D Stephens DATE 2/8/77
ENG. Tom Egge DATE 8/26/77
BOARD LOCATION:
SHEET 2 OF 2
M8542.RLS(4,603) 07-FEB-77 21:34
NEXT HIGHER ASSEMBLY:
FIRST USED ON OPTION/MODEL: KL10-PV B-DD-M8544-0

TITLE: MEMORY CONTROL TERMINATORS

SIZE	CODE	NUMBER	REV.
D	CS	M8544-0-RES	

SIZE D CODE CS NUMBER M8544-0-RES REV.

381

MR

SIZE	CODE	NUMBER	REV.
B	DD	M8545-Ø	

DRAWING NO.	NO. OF SHTS	PART NO.	DESCRIPTION	REVISIONS
			MODULE REVISION	A
D-UA-M8545-Ø-Ø	5		APR BOARD	-
D-CS-M8545-Ø-APR1	1		APR BOARD APR REGISTER A	-
D-CS-M8545-Ø-APR2	1		APR BOARD APR REGISTER B	-
D-CS-M8545-Ø-APR3	1		APR BOARD I/O CONTROL	-
D-CS-M8545-Ø-APR4	1		APR BOARD FAST MEM ADDRESS	-
D-CS-M8545-Ø-APR5	1		APR BOARD FAST MEM BLOCK	-
D-CS-M8545-Ø-APR6	1		APR BOARD DIAGNOSTICS	-
D-CS-M8545-Ø-APR7	1		APR BOARD POWER, GND, CAPS	-
D-CS-M8545-Ø-RES	1		APR BOARD TERMINATORS	-
D-AH-M8545-Ø-5	4		APR BOARD	-
		5011890	ETCHED CIRCUIT BOARD	C
M8545-Ø-L	-		P.C. DESIGN DATA BASE	REF
M8545-Ø-PL	-		INSERTION P/L DATA BASE	REF
POO-M8545-ØØ	-		PROCESS SHEETS	REF

NOTES:

REVISIONS	REV	CHG NO.	DATE

"THIS DRAWING AND SPECIFICATIONS, HEREIN, ARE THE PROPERTY OF DIGITAL EQUIPMENT CORPORATION AND SHALL NOT BE REPRODUCED OR COPIED OR USED IN WHOLE OR IN PART AS THE BASIS FOR THE MANUFACTURE OR SALE OF ITEMS WITHOUT WRITTEN PERMISSION.
COPYRIGHT © 1976 DIGITAL EQUIPMENT CORPORATION"

digital

USED ON OPTION/MODEL	
KL1Ø	

DRN	R. Wilson	10/10/76
CHK'D	[illegible]	10 Nov 76
ENG	Tom Spear	12 Nov 76
PROD.	W. Emby	12 Nov 76

TITLE: APR MODULE

SIZE	CODE	NUMBER	REV.
B	DD	M8545-Ø	

SHEET 1 OF 1

MR

THIS DRAWING AND SPECIFICATIONS, HEREIN, ARE THE PROPERTY OF DIGITAL EQUIPMENT CORPORATION AND SHALL NOT BE REPRODUCED OR COPIED OR USED IN WHOLE OR IN PART AS THE BASIS FOR THE MANUFACTURE OR SALE OF ITEMS WITHOUT WRITTEN PERMISSION.
COPYRIGHT © 1976 DIGITAL EQUIPMENT CORPORATION

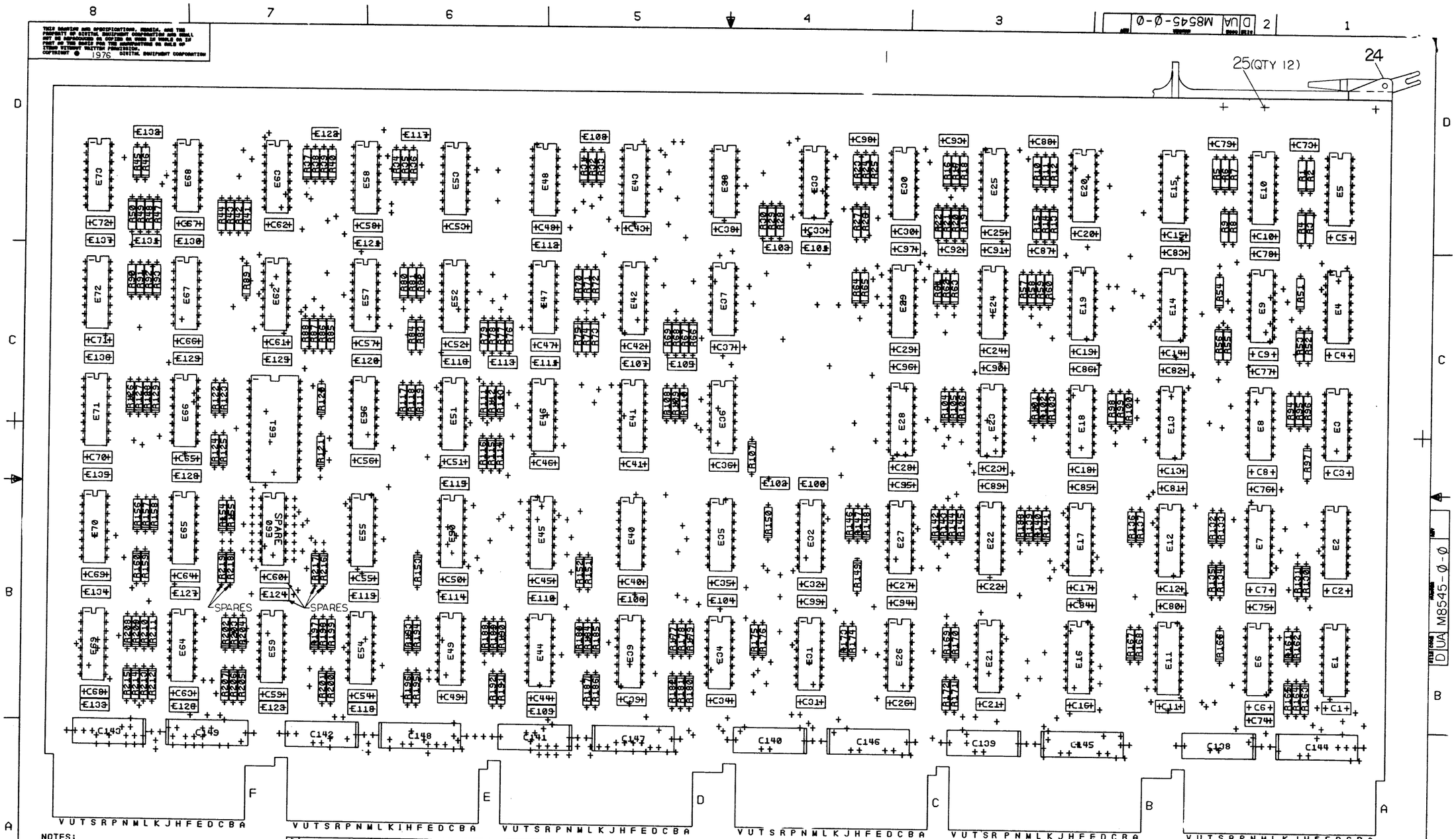

NOTES:

CHK	CHANGE NO	REV

ETCH REV. C
P.C. DESIGN DATA BASE REV. C

SIGNATURES	DATE
DRN. R.W. Carrington	12 MAY 76
CHK'D. [illegible]	17 MAY 76
ENG. Tim Ryan	5 NOV 76
PROJ.ENG. Tim Ryan	5 NOV 76
PROD. W. Epley	12 NOV 76

digital

TITLE APR BOARD

SCALE 2/V
SHT. 2 OF 5
NEXT HIGHER ASSY. B-DD-M8545-0

SIZE	CODE	NUMBER	REV
D	UA	M8545-0-0	

MR1 MS# 30195

383

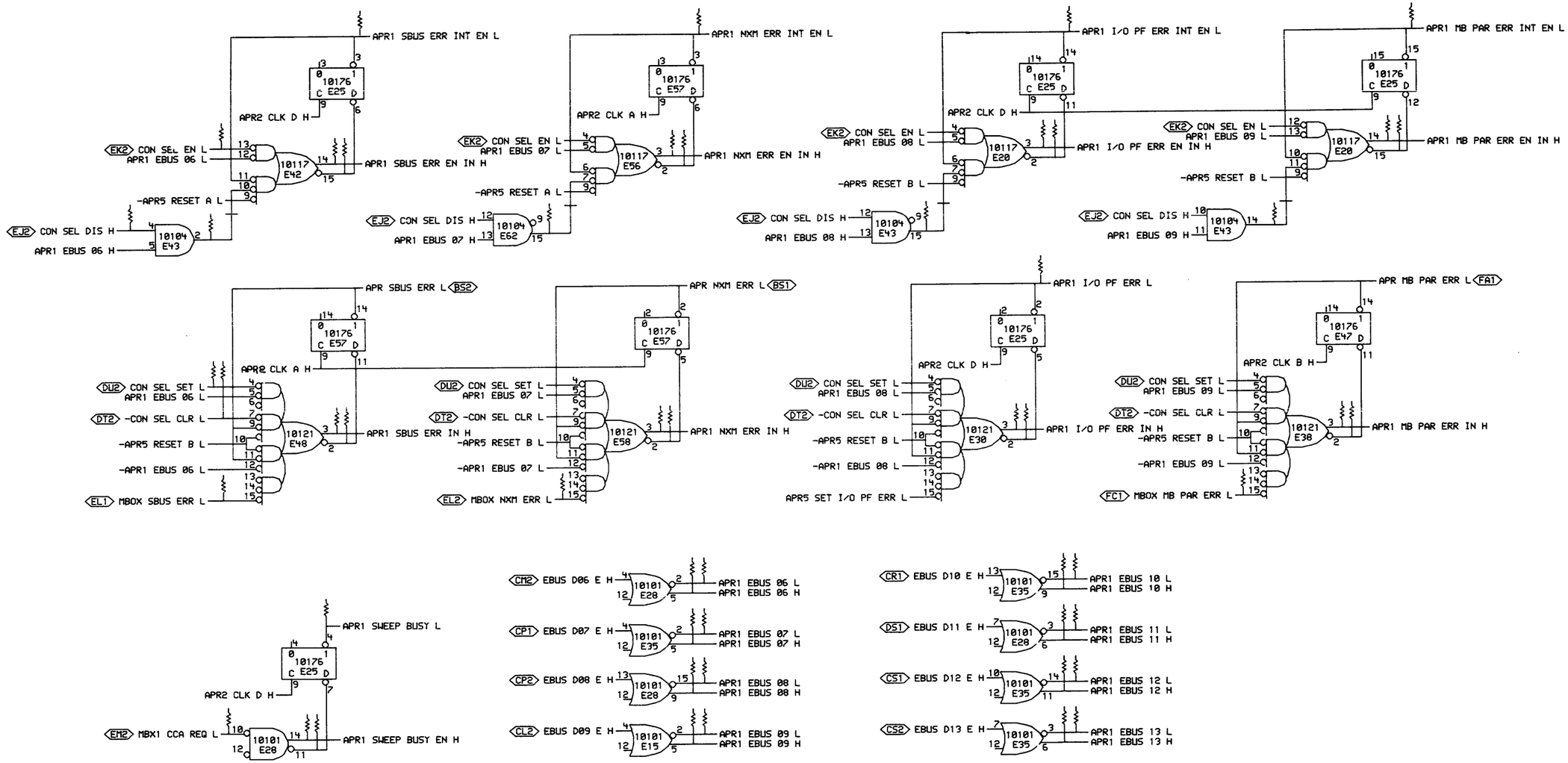

1 OF 7

"THIS DRAWING AND SPECIFICATIONS, HEREIN, ARE THE PROPERTY OF DIGITAL EQUIPMENT CORPORATION AND SHALL NOT BE REPRODUCED OR COPIED OR USED IN WHOLE OR IN PART AS THE BASIS FOR THE MANUFACTURE OR SALE OF ITEMS WITHOUT WRITTEN PERMISSION. COPYRIGHT © 1976, DIGITAL EQUIPMENT CORPORATION"

REVISIONS		
CHK	CHANGE NO.	REV

digital

DRN. D. Loosley DATE 01-NOV-76 ENG. Tom Eggers DATE 3-Nov-76
CHK'D Tom Eggers DATE 3-Nov-76 BOARD LOCATION: 4AF34
SHEET 1 OF 1
APR1EC.RLS[4,161] 30-OCT-76 20:45 NEXT HIGHER ASSEMBLY:
FIRST USED ON OPTION/MODEL: KL10 B-DD-M8545-0

TITLE: APR BOARD
APR REGISTER A

SIZE	CODE	NUMBER	REV.
D	CS	M8545-0-APR1	

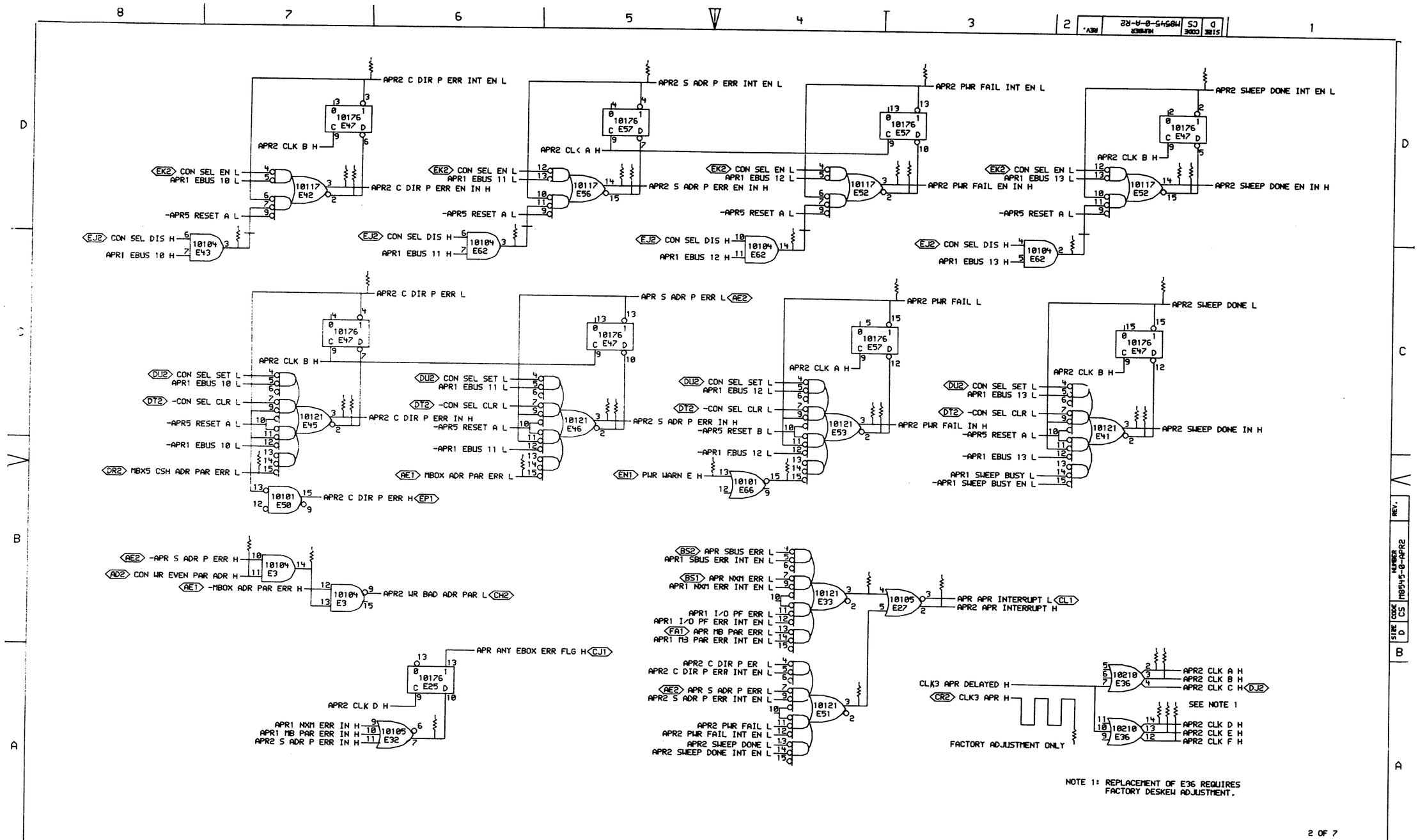

2 OF 7

"THIS DRAWING AND SPECIFICATIONS, HEREIN, ARE THE PROPERTY OF DIGITAL EQUIPMENT CORPORATION AND SHALL NOT BE REPRODUCED OR COPIED OR USED IN WHOLE OR IN PART AS THE BASIS FOR THE MANUFACTURE OR SALE OF ITEMS WITHOUT WRITTEN PERMISSION. COPYRIGHT © 1976, DIGITAL EQUIPMENT CORPORATION"

REVISIONS		
CHK	CHANGE NO.	REV

digital

DRN. K. Loomley DATE 01-NOV-76 ENG. Tom Egge DATE 3 Nov 76
CHK'D. Tom Egge DATE 3 Nov 76 BOARD LOCATION: 4AF34
SHEET 1 OF 1
APR2EC.RLS[4,161] 30-OCT-76 20:46 NEXT HIGHER ASSEMBLY:
FIRST USED ON OPTION/MODEL: KL10 B-DD-M8545-0

TITLE: APR BOARD
APR REGISTER B

SIZE	CODE	NUMBER	REV.
D	CS	M8545-0-APR2	

385

MR

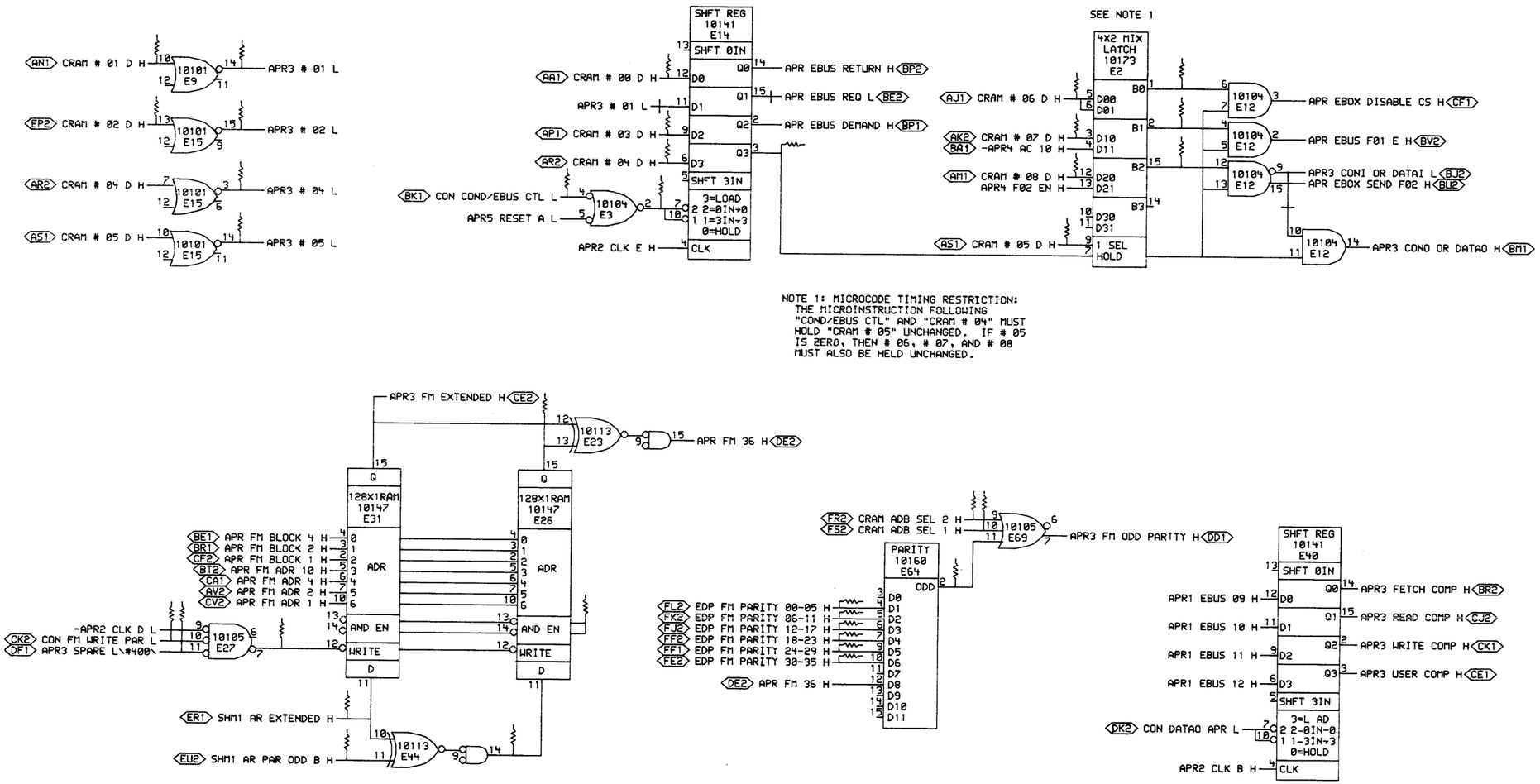

"THIS DRAWING AND SPECIFICATIONS, HEREIN, ARE THE PROPERTY OF DIGITAL EQUIPMENT CORPORATION AND SHALL NOT BE REPRODUCED OR COPIED OR USED IN WHOLE OR IN PART AS THE BASIS FOR THE MANUFACTURE OR SALE OF ITEMS WITHOUT WRITTEN PERMISSION.
COPYRIGHT © 1976, DIGITAL EQUIPMENT CORPORATION"

REVISIONS		
CHK	CHANGE NO.	REV

digital

DWN. L. Loomis DATE 03-NOV-76 ENG. Tom Eggers DATE 5 Nov 76
CHK. DATE BOARD LOCATION: 4AF34
APR3EC.RLS[4,161] 04-NOV-76 11:37 SHEET 1 OF 1
FIRST USED ON OPTION/MODEL: KL10 NEXT HIGHER ASSEMBLY: B-DD-M8545-0

TITLE: APR BOARD I/O CONTROL

SIZE	CODE	NUMBER	REV.
D	CS	M8545-0-APR3	

386

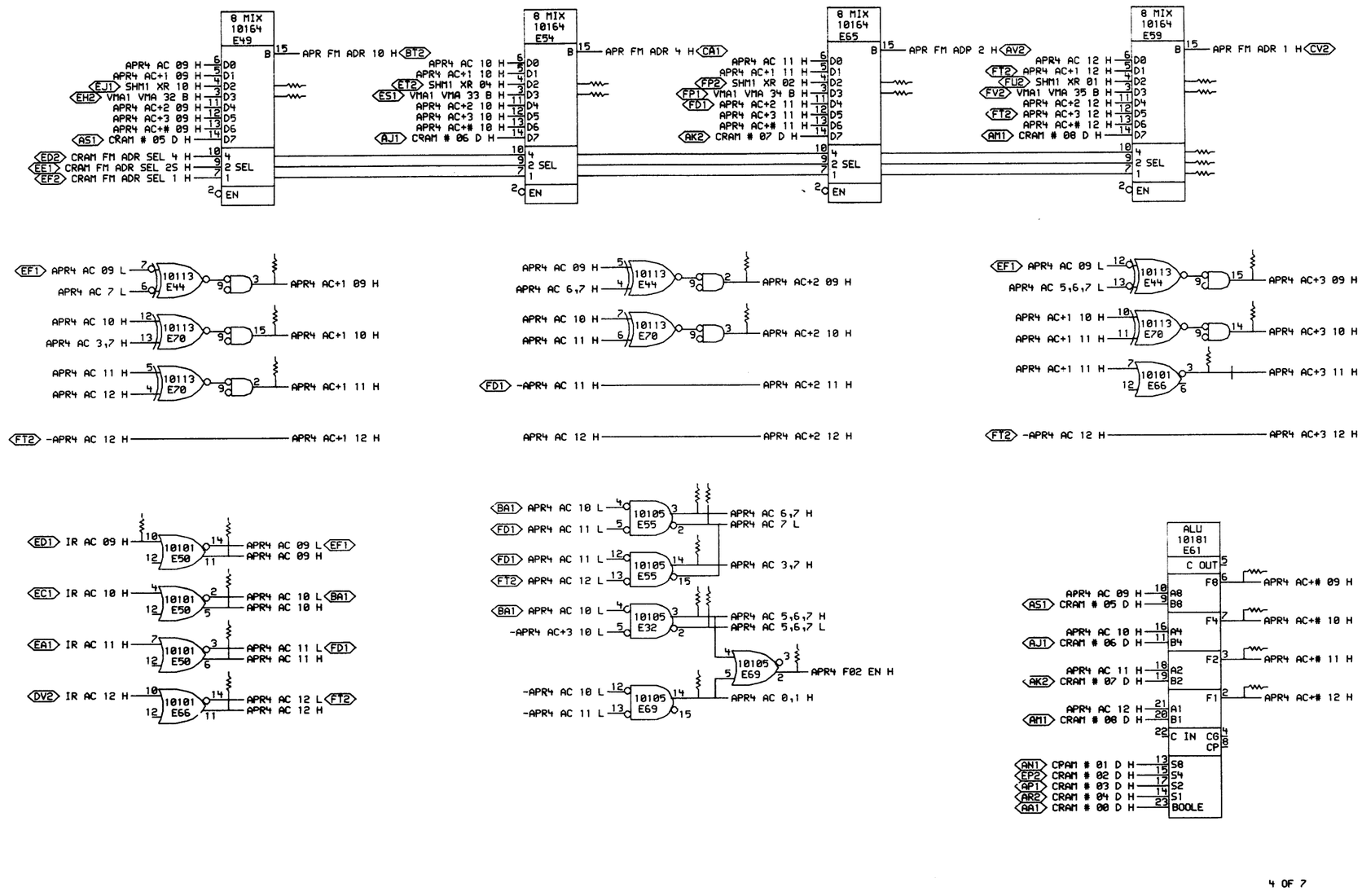

4 OF 7

"THIS DRAWING AND SPECIFICATIONS, HEREIN, ARE THE PROPERTY OF DIGITAL EQUIPMENT CORPORATION AND SHALL NOT BE REPRODUCED OR COPIED OR USED IN WHOLE OR IN PART AS THE BASIS FOR THE MANUFACTURE OR SALE OF ITEMS WITHOUT WRITTEN PERMISSION. COPYRIGHT © 1976, DIGITAL EQUIPMENT CORPORATION"

REVISIONS		
CHK	CHANGE NO.	REV

digital

DRN. DATE 01-NOV-76 ENG. DATE
CHK'D. DATE
APR4EC.RLS[4,161] 30-OCT-76 20:47
FIRST USED ON OPTION/MODEL: KL10
BOARD LOCATION: 4AF34
SHEET 1 OF 1
NEXT HIGHER ASSEMBLY: B-DD-M8545-0

TITLE: APR BOARD FAST MEM ADDRESS

SIZE	CODE	NUMBER	REV.
D	CS	M8545-0-APR4	

397

MR

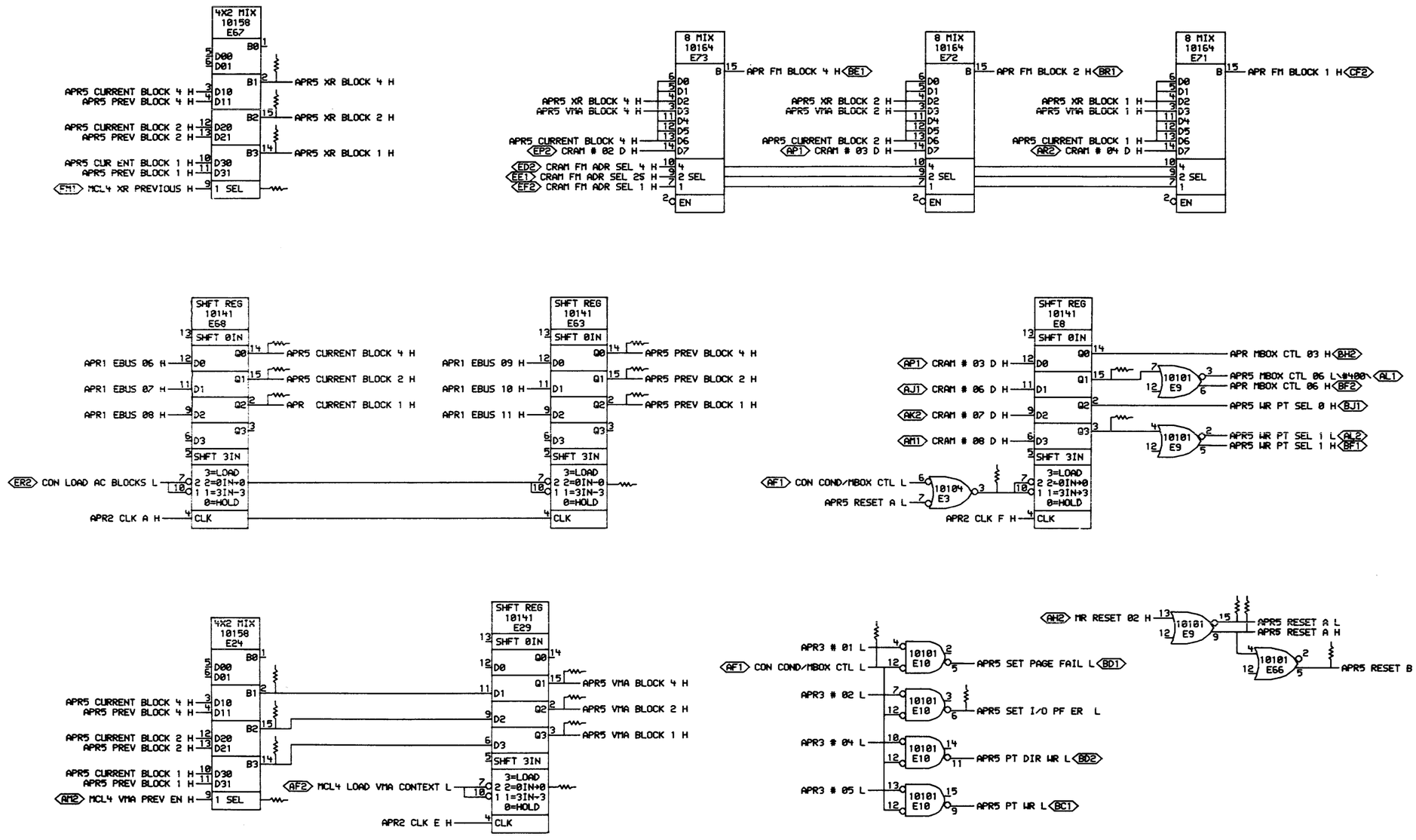

"THIS DRAWING AND SPECIFICATIONS, HEREIN, ARE THE PROPERTY OF DIGITAL EQUIPMENT CORPORATION AND SHALL NOT BE REPRODUCED OR COPIED OR USED IN WHOLE OR IN PART AS THE BA IS FOR THE MANUFACTURE OR SALE OF ITEMS WITHOUT WRITTEN PERMISSION. COPYR'GHT © 1976, DIGITAL EQUIPMENT CORPORATION"

REVISIONS		
CHK	CHANGE NO.	REV

DRN: J. Loosley DATE 01-NOV-76 ENG: Tom Eggert DATE 3-Nov-76 TITLE: APR BOARD FAST MEM BLOCK

CHKD: Tom Eggert DATE 3-Nov-76 BOARD LOCATION: 4AF34 SHEET 1 OF 1

APR*EC.RLS[4,161] 30-OCT-76 20:47 NEXT HIGHER ASSEMBLY: B-DD-M8545-0

FIRST USED ON OPTION/MODEL: KL10

SIZE	CODE	NUMBER	REV.
D	CS	M8545-0-APR5	

388

MR

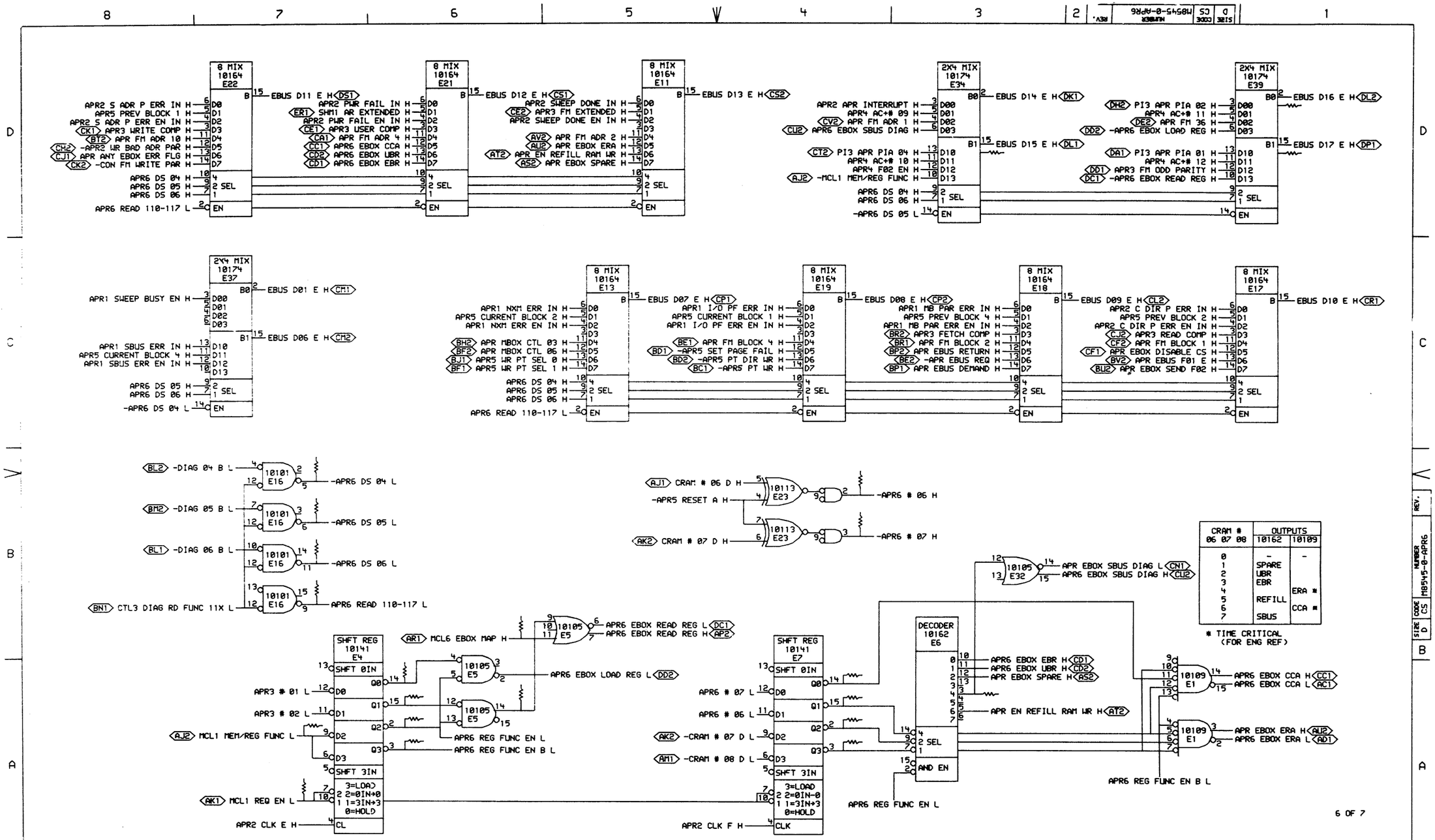

CRAM # 06 07 08	OUTPUTS 10162	OUTPUTS 10109
0	-	-
1	SPARE	
2	UBR	
3	EBR	
4		ERA *
5	REFILL	
6		CCA *
7	SBUS	

* TIME CRITICAL (FOR ENG REF)

"THIS DRAWING AND SPECIFICATIONS, HEREIN, ARE THE PROPERTY OF DIGITAL EQUIPMENT CORPORATION AND SHALL NOT BE REPRODUCED OR COPIED OR USED IN WHOLE OR IN PART AS THE BASIS FOR THE MANUFACTURE OR SALE OF ITEMS WITHOUT WRITTEN PERMISSION.
COPYRIGHT © 1976, DIGITAL EQUIPMENT CORPORATION"

REVISIONS		
CHK	CHANGE NO.	REV

digital

DRN. J. Toomey DATE 01-NOV-76 ENG. Tom Egan DATE 3 Nov 76
CHK'D. Tom Egan DATE 3 Nov 76 BOARD LOCATION: 4AF34
SHEET 1 OF 1
APRGEC.RLSE4,1613 30-OCT-76 20:48 NEXT HIGHER ASSEMBLY:
FIRST USED ON OPTION/MODEL: KL10 B-DD-M8545-0

TITLE: APR BOARD DIAGNOSTICS

SIZE	CODE	NUMBER	REV.
D	CS	M8545-0-APR6	

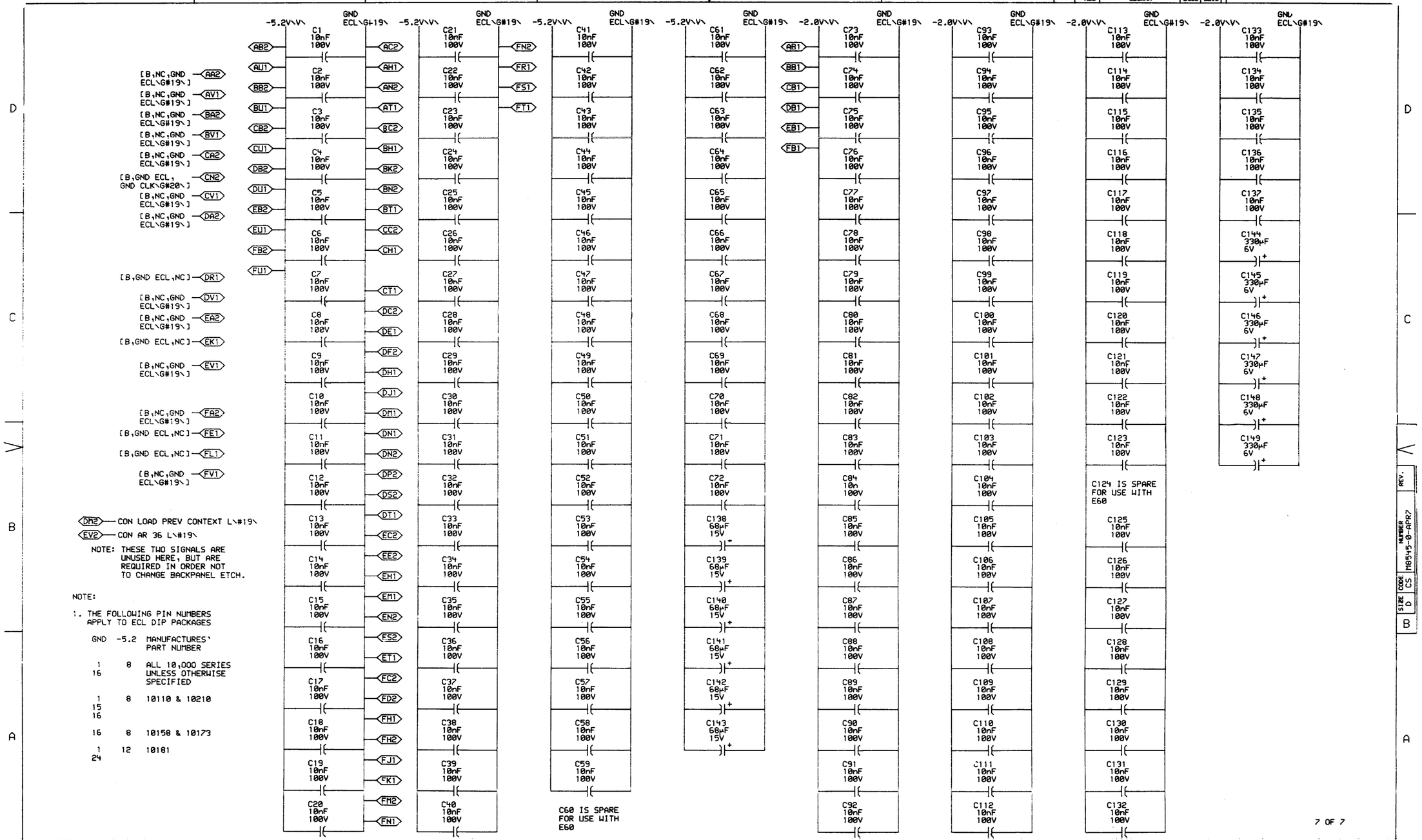

"THIS DRAWING AND SPECIFICATIONS, HEREIN, ARE THE PROPERTY OF DIGITAL EQUIPMENT CORPORATION AND SHALL NOT BE REPRODUCED OR COPIED OR USED IN WHOLE OR IN PART AS THE BASIS FOR THE MANUFACTURE OR SALE OF ITEMS WITHOUT WRITTEN PERMISSION.
COPYRIGHT © 1976, DIGITAL EQUIPMENT CORPORATION"

REVISIONS		
CHK	CHANGE NO.	REV

digital

DRN. S. Loosley DATE 03-NOV-76
CHK. D. Johnson DATE 11/3/76
ENG. Tom Eggers DATE 3 Nov 76
BOARD LOCATION: 4HF34
SHEET 1 OF 1
APR2EC.RLS[4,151] 04-NOV-76 12:22
NEXT HIGHER ASSEMBLY: B-DD-M8545-0
FIRST USED ON OPTION/MODEL: KL10

TITLE: APR BOARD POWER, GND, CAPS

SIZE	CODE	NUMBER	REV.
D	CS	M8545-0-APR7	

390

RESISTOR LOC(PIN)	SHOWN ON DRW#	REF	VALUE	TERMINATES SIGNAL
R130(1)	APR3	D4	68Ω	%E14(3)
R136(1)	APR3	D3	68Ω	%E2(1)
R132(1)	APR3	D3	68Ω	%E2(15)
R137(1)	APR3	D3	68Ω	%E2(2)
R17(1)	APR1	D1	68Ω	%E20(15)
R10(1)	APR1	D3	68Ω	%E20(2)
R65(1)	APR5	A7	68Ω	%E24(14)
R62(1)	APR5	A7	68Ω	%E24(15)
R61(1)	APR5	A7	68Ω	%E24(2)
R174(1)	APR3	B5	68Ω	%E26(13)
R105(1)	APR3	B6	68Ω	%E26(15)
R173(1)	APR3	B7	68Ω	%E27(7)
R19(1)	APR1	A7	68Ω	%E28(11)
R95(1)	APR2	B7	68Ω	%E3(14)
R56(1)	APR3	C5	68Ω	%E3(2)
R94(1)	APR5	B3	68Ω	%E3(3)
R18(1)	APR1	C3	68Ω	%E30(2)
R20(1)	APR2	A6	68Ω	%E32(7)
R147(1)	APR2	B4	68Ω	%E33(3)
R71(1)	APR1	C2	68Ω	%E38(2)
R1(1)	APR6	A6	68Ω	%E4(14)
R2(1)	APR6	A6	68Ω	%E4(15)
R70(1)	APR2	C2	68Ω	%E41(2)
R22(1)	APR1	D7	68Ω	%E42(15)
R74(1)	APR2	D7	68Ω	%E42(2)
R15(1)	APR1	C2	68Ω	%E43(14)
R13(1)	APR1	C4	68Ω	%E43(15)
R69(1)	APR1	C7	68Ω	%E43(2)
R73(1)	APR2	C7	68Ω	%E43(3)
R172(1)	APR3	A6	68Ω	%E44(14)
R76(1)	APR2	C7	68Ω	%E45(2)
R77(1)	APR2	C5	68Ω	%E46(2)
R81(1)	APR1	C7	68Ω	%E48(2)
R3(1)	APR6	A6	68Ω	%E5(14)
R148(1)	APR2	A4	68Ω	%E51(3)
R78(1)	APR2	D2	68Ω	%E52(15)
R84(1)	APR2	D3	68Ω	%E52(2)
R80(1)	APR2	C3	68Ω	%E53(2)
R85(1)	APR2	D5	68Ω	%E56(15)
R86(1)	APR1	D5	68Ω	%E56(2)
R87(1)	APR1	C5	68Ω	%E58(2)
R146(1)	APR6	A3	68Ω	%E6(3)
R83(1)	APR2	C4	68Ω	%E62(14)
R118(1)	APR1	C6	68Ω	%E62(15)
R82(1)	APR2	C2	68Ω	%E62(2)
R117(1)	APR2	C6	68Ω	%E62(3)
R210(1)	APR3	B4	68Ω	%E64(2)
R35(1)	APR2	B4	68Ω	%E66(15)
R164(1)	APR6	A4	68Ω	%E7(14)
R162(1)	APR6	A4	68Ω	%E7(15)

NOTE:

1. ALL TERMINATORS HAVE PIN TWO CONNECTED TO -2.0V AND ARE 5% 1/4WATT UNLESS OTHERWISE SPECIFIED
2. ENTRIES ARE SORTED BY SIGNAL NAME
3. % INDICATES OUTPUT OF DIP LOC AND () INDICATES PIN NUMBER

RESISTOR LOC(PIN)	SHOWN ON DRW#	REF	VALUE	TERMINATES SIGNAL
R165(1)	APR6	A4	68Ω	%E7(2)
R163(1)	APR6	A4	68Ω	%E7(3)
R55(1)	APR5	C3	68Ω	%E8(15)
R54(1)	APR5	C3	68Ω	%E8(3)
R44(1)	APR1	B5	68Ω	APR1 EBUS 06 H
R32(1)	APR1	B5	68Ω	-APR1 EBUS 06 H
R39(1)	APR1	B5	68Ω	APR1 EBUS 07 H
R40(1)	APR1	B5	68Ω	-APR1 EBUS 07 H
R43(1)	APR1	B5	68Ω	APR1 EBUS 08 H
R12(1)	APR1	B5	68Ω	-APR1 EBUS 08 H
R37(1)	APR1	A5	68Ω	APR1 EBUS 09 H
R30(1)	APR1	A5	68Ω	-APR1 EBUS 09 H
R38(1)	APR1	B3	68Ω	APR1 EBUS 10 H
R72(1)	APR1	B3	68Ω	-APR1 EBUS 10 H
R41(1)	APR1	B3	68Ω	APR1 EBUS 11 H
R119(1)	APR1	B3	68Ω	-APR1 EBUS 11 H
R88(1)	APR1	B3	68Ω	APR1 EBUS 12 H
R36(1)	APR1	B3	68Ω	-APR1 EBUS 12 H
R89(1)	APR1	A3	68Ω	APR1 EBUS 13 H
R79(1)	APR1	A3	68Ω	-APR1 EBUS 13 H
R27(1)	APR1	C3	68Ω	-APR1 I/O PF ERR H
R59(1)	APR1	D3	68Ω	APR1 I/O PF ERR EN IN H
R58(1)	APR1	C3	68Ω	APR1 I/O PF ERR IN H
R23(1)	APR1	D3	68Ω	-APR1 I/O PF ERR INT EN H
R102(1)	APR1	D1	68Ω	APR1 MB PAR ERR EN IN H
R101(1)	APR1	C2	68Ω	APR1 MB PAR ERR IN H
R24(1)	APR1	D1	68Ω	-APR1 MB PAR ERR INT EN H
R99(1)	APR1	D5	68Ω	APR1 NXM ERR EN IN H
R98(1)	APR1	C5	68Ω	APR1 NXM ERR IN H
R20(1)	APR1	D5	68Ω	-APR1 NXM ERR INT EN H
R66(1)	APR1	D7	68Ω	APR1 SBUS ERR EN IN H
R67(1)	APR1	C7	68Ω	APR1 SBUS ERR IN H
R68(1)	APR1	D7	68Ω	-APR1 SBUS ERR INT EN H
R109(1)	APR1	B7	68Ω	-APR1 SWEEP BUSY H
R110(1)	APR1	A7	68Ω	APR1 SWEEP BUSY EN H
R178(1)	APR2	B3	68Ω	APR2 APR INTERRUPT H
R152(1)	APR2	C6	68Ω	-APR2 C DIR P ERR H
R140(1)	APR2	D7	68Ω	APR2 C DIR P ERR EN IN H
R138(1)	APR2	C7	68Ω	APR2 C DIR P ERR IN H
R116(1)	APR2	D6	68Ω	-APR2 C DIR P ERR INT EN H
R42(1)	APR2	A2	68Ω	APR2 CLK A H
R75(1)	APR2	A2	68Ω	APR2 CLK B H
R21(1)	APR2	A2	68Ω	APR2 CLK D H
R51(1)	APR2	A2	68Ω	APR2 CLK E H
R133(1)	APR2	A2	68Ω	APR2 CLK F H
R115(1)	APR2	C3	68Ω	-APR2 PWR FAIL H
R169(1)	APR2	D3	68Ω	APR2 PWR FAIL EN IN H
R171(1)	APR2	C4	68Ω	APR2 PWR FAIL IN H
R111(1)	APR2	D3	68Ω	-APR2 PWR FAIL INT EN H
R144(1)	APR2	D5	68Ω	APR2 S ADR P ERR EN IN H
R142(1)	APR2	C5	68Ω	APR2 S ADR P ERR IN H
R114(1)	APR2	D5	68Ω	-APR2 S ADR P ERR INT EN H
R108(1)	APR2	C2	68Ω	-APR2 SWEEP DONE H
R168(1)	APR2	D2	68Ω	APR2 SWEEP DONE EN IN H
R167(1)	APR2	C2	68Ω	APR2 SWEEP DONE IN H

RESISTOR LOC(PIN)	SHOWN ON DRW#	REF	VALUE	TERMINATES SIGNAL
R112(1)	APR2	D2	68Ω	-APR2 SWEEP DONE INT EN H
R7(1)	APR3	D7	68Ω	-APR3 # 01 H
R53(1)	APR3	D7	68Ω	-APR3 # 02 H
R8(1)	APR3	C7	68Ω	-APR3 # 04 H
R6(1)	APR3	C7	68Ω	-APR3 # 05 H
R149(1)	APR3	B7	68Ω	APR3 SPARE L\#400\
R214(1)	APR4	B4	68Ω	APR4 AC 0,1 H
R125(1)	APR4	B7	68Ω	APR4 AC 09 H
R160(1)	APR4	B7	68Ω	APR4 AC 10 H
R200(1)	APR4	B7	68Ω	APR4 AC 11 H
R159(1)	APR4	B7	68Ω	APR4 AC 12 H
R156(1)	APR4	B4	68Ω	APR4 AC 3,7 H
R209(1)	APR4	B4	68Ω	APR4 AC 5,6,7 H
R183(1)	APR4	B4	68Ω	-APR4 AC 5,6,7 H
R190(1)	APR4	B4	68Ω	APR4 AC 6,7 H
R191(1)	APR4	B4	68Ω	-APR4 AC 7 H
R179(1)	APR4	B2	68Ω	APR4 AC+# 09 H
R180(1)	APR4	B2	68Ω	APR4 AC+# 10 H
R185(1)	APR4	B2	68Ω	APR4 AC+# 11 H
R187(1)	APR4	B2	68Ω	APR4 AC+# 12 H
R194(1)	APR4	C6	68Ω	APR4 AC+1 09 H
R199(1)	APR4	C6	68Ω	APR4 AC+1 10 H
R129(1)	APR4	C6	68Ω	APR4 AC+1 11 H
R189(1)	APR4	C4	68Ω	APR4 AC+2 09 H
R196(1)	APR4	C4	68Ω	APR4 AC+2 10 H
R188(1)	APR4	C2	68Ω	APR4 AC+3 09 H
R150(1)	APR4	C2	68Ω	APR4 AC+3 10 H
R154(1)	APR4	C2	68Ω	APR4 AC+3 11 H
R131(1)	APR4	B4	68Ω	APR4 F02 EN H
R60(1)	APR5	C7	68Ω	APR5 CURRENT BLOCK 1 H
R100(1)	APR5	C7	68Ω	APR5 CURRENT BLOCK 2 H
R63(1)	APR5	C7	68Ω	APR5 CURRENT BLOCK 4 H
R145(1)	APR5	C5	68Ω	APR5 PREV BLOCK 1 H
R141(1)	APR5	C5	68Ω	APR5 PREV BLOCK 2 H
R103(1)	APR5	C5	68Ω	APR5 PREV BLOCK 4 H
R123(1)	APR5	B2	68Ω	APR5 RESET A H
R106(1)	APR5	B2	68Ω	-APR5 RESET A H
R14(1)	APR5	B1	68Ω	APR5 RESET B H
R16(1)	APR5	A3	68Ω	-APR5 SET I/O PF ERR H
R128(1)	APR5	A5	68Ω	APR5 VMA BLOCK 1 H
R92(1)	APR5	A5	68Ω	APR5 VMA BLOCK 2 H
R45(1)	APR5	B5	68Ω	APR5 VMA BLOCK 4 H
R127(1)	APR5	D7	68Ω	APR5 XR BLOCK 1 H
R90(1)	APR5	D7	68Ω	APR5 XR BLOCK 2 H
R46(1)	APR5	D7	68Ω	APR5 XR BLOCK 4 H
R134(1)	APR6	B4	68Ω	-APR6 # 06 H
R135(1)	APR6	B4	68Ω	-APR6 # 07 H
R181(1)	APR6	B7	68Ω	APR6 DS 04 H
R177(1)	APR6	B7	68Ω	APR6 DS 05 H
R186(1)	APR6	B7	68Ω	APR6 DS 06 H
R139(1)	APR6	B7	68Ω	-APR6 READ 110-117 H
R166(1)	APR6	A6	68Ω	-APR6 REG FUNC EN H
R161(1)	APR6	A6	68Ω	-APR6 REG FUNC EN B H
R107(1)	APR2	A2	68Ω	CLK3 APR H
R96(1)	APR3	C5	68Ω	-CON COND/EBUS CTL H

RESISTOR LOC(PIN)	SHOWN ON DRW#	REF	VALUE	TERMINATES SIGNAL
R9(1)	APR5	B4	68Ω	-CON COND/MBOX CTL H
R143(1)	APR3	B7	68Ω	-CON FM WRITE PAR H
R47(1)	APR5	B5	68Ω	-CON LOAD AC BLOCKS H
R26(1)	APR1	C7	68Ω	CON SEL CLR H
R33(1)	APR1	C8	68Ω	CON SEL DIS H
R11(1)	APR1	D7	68Ω	-CON SEL EN H
R25(1)	APR1	C7	68Ω	-CON SEL SET H
R97(1)	APR2	B7	68Ω	CON WR EVEN PAR ADR H
R120(1)	APR3	D5	68Ω	CRAM # 00 D H
R121(1)	APR3	D7	68Ω	CRAM # 01 D H
R5(1)	APR3	D7	68Ω	CRAM # 02 D H
R93(1)	APR3	D5	68Ω	CRAM # 03 D H
R126(1)	APR3	D5	68Ω	CRAM # 04 D H
R124(1)	APR3	C3	68Ω	CRAM # 05 D H
R198(1)	APR3	D3	68Ω	CRAM # 06 D H
R155(1)	APR3	D3	68Ω	CRAM # 07 D H
R201(1)	APR3	D3	68Ω	CRAM # 08 D H
R215(1)	APR3	B4	68Ω	CRAM ADB SEL 1 H
R213(1)	APR3	B4	68Ω	CRAM ADB SEL 2 H
R49(1)	APR4	D2	68Ω	CRAM FM ADR SEL 1 H
R48(1)	APR4	D2	68Ω	CRAM FM ADR SEL 2S H
R50(1)	APR4	D2	68Ω	CRAM FM ADR SEL 4 H
R202(1)	APR3	B4	68Ω	EDP FM PARITY 00-05 H
R211(1)	APR3	B4	68Ω	EDP FM PARITY 06-11 H
R212(1)	APR3	B4	68Ω	EDP FM PARITY 12-17 H
R206(1)	APR3	B4	68Ω	EDP FM PARITY 18-23 H
R205(1)	APR3	B4	68Ω	EDP FM PARITY 24-29 H
R207(1)	APR3	A4	68Ω	EDP FM PARITY 30-35 H
R153(1)	APR4	B7	68Ω	IR AC 09 H
R113(1)	APR2	B6	68Ω	-MBOX ADR PAR ERR H
R29(1)	APR1	B2	68Ω	-MBOX MB PAR ERR H
R34(1)	APR1	B6	68Ω	-MBOX NXM ERR H
R31(1)	APR1	B7	68Ω	-MBOX SBUS ERR H
R104(1)	APR1	A7	68Ω	-MBX1 CCA REQ H
R151(1)	APR2	B7	68Ω	-M3X5 CSH ADR PAR ERR H
R175(1)	APR6	A7	68Ω	-MCL1 MEM/REG FUNC H
R52(1)	APR6	A7	68Ω	-MCL1 REQ EN H
R64(1)	APR5	A5	68Ω	-MCL4 LOAD VMA CONTEXT H
R57(1)	APR5	A7	68Ω	MCL4 VMA PREV EN H
R91(1)	APR5	C7	68Ω	MCL4 XR PREVIOUS H
R4(1)	APR6	B6	68Ω	MCL6 EBOX MAP H
R182(1)	APR6	D1	68Ω	PI3 APR PIA 01 H
R184(1)	APR6	D1	68Ω	PI3 APR PIA 02 H
R176(1)	APR6	D3	68Ω	PI3 APR PIA 04 H
R122(1)	APR2	B4	68Ω	PWR WARN E H
R170(1)	APR3	A6	68Ω	SHM1 AR EXTENDED H
R192(1)	APR3	A6	68Ω	SHM1 AR PAR ODD B H
R204(1)	APR4	D2	68Ω	SH11 XR 01 H
R158(1)	APR4	D4	68Ω	SHM1 XR 02 H
R197(1)	APR4	D5	68Ω	SHM1 XR 04 H
R195(1)	APR4	D6	68Ω	SHM1 XR 10 H
R193(1)	APR4	D6	68Ω	VMA1 VMA 32 B H
R200(1)	APR4	D5	68Ω	VMA1 VMA 33 B H
R157(1)	APR4	D4	68Ω	VM-1 VMA 34 B H
R203(1)	APR4	D2	68Ω	VMA1 VMA 35 B H

"THIS DRAWING AND SPECIFICATIONS, HEREIN, ARE THE PROPERTY OF DIGITAL EQUIPMENT CORPORATION AND SHALL NOT BE REPRODUCED OR COPIED OR USED IN WHOLE OR IN PART AS THE BASIS FOR THE MANUFACTURE OR SALE OF ITEMS WITHOUT WRITTEN PERMISSION.
COPYRIGHT © 1976, DIGITAL EQUIPMENT CORPORATION"

REVISIONS		
CHK	CHANGE NO.	REV

digital

DRN. C Smith DATE 31-OCT-76
CHK'D DATE 3-Nov-76
ENG DATE 3-Nov-76
M8545.RLS(4,16) 31-OCT-76 12:45
FIRST USED ON OPTION/MODEL: KL10
BOARD LOCATION: SHEET 1 OF 1
NEXT HIGHER ASSEMBLY: B-DD-M8545-0

TITLE: APR BOARD TERMINATOR

SIZE	CODE	NUMBER
D	CS	M8545-0-RES

391

SIZE	CODE	NUMBER	REV.
B	DD	M8548-Ø	

DRAWING NO.	NO. OF SHTS	PART NO.	DESCRIPTION	REVISIONS
			MODULE REVISION	A
D-UA-M8548-Ø-Ø	5		2K CONTROL RAM	-
D-CS-M8548-Ø-CRØ1	1		2K CONTROL RAM ADDRESS LINES	-
D-CS-M8548-Ø-CRØ2	1		2K CONTROL RAM EBUS AND DIAG.	-
D-CS-M8548-Ø-CRØ3	1		2K CONTROL RAM OUTPUT SIGNALS	-
D-CS-M8548-Ø-CRØ4	1		2K CONTROL RAM BITS ØØ-39	-
D-CS-M8548-Ø-CRØ5	1		2K CONTROL RAM BITS 4Ø-79	-
D-CS-M8548-Ø-CRØ6	1		2K CONTROL RAM POWER,GND,CAPS	-
D-CS-M8548-Ø-CRAM	1		CRAM NAMES	-
D-AH-M8548-Ø-5	4		2K CONTROL RAM	-
		5011859	ETCHED CIRCUIT BOARD	A
M8548-Ø-L			P.C. DESIGN DATA BASE	REF
M8548-Ø-PL			INSERTION P/L DATA BASE	REF
PØØ-M8548-ØØ			PROCESS SHEETS	REF

NOTES:

REVISIONS		
DATE	CHG NO.	REV.

"THIS DRAWING AND SPECIFICATIONS, HEREIN, ARE THE PROPERTY OF DIGITAL EQUIPMENT CORPORATION AND SHALL NOT BE REPRODUCED OR COPIED OR USED IN WHOLE OR IN PART AS THE BASIS FOR THE MANUFACTURE OR SALE OF ITEMS WITHOUT WRITTEN PERMISSION.
COPYRIGHT ©1976, DIGITAL EQUIPMENT CORPORATION"

digital

USED ON OPTION/MODEL	
KL1Ø	

DRN.	R.W. Counter	14 Jun 76
CHK'D	M. McNeal	30 Aug 76
ENG.	Tom Eggers	30 Aug 76
PROD.	Bill Emley	14 OCT 76

TITLE: 2K CONTROL RAM

SIZE	CODE	NUMBER	REV.
B	DD	M8548-Ø	

SHEET 1 OF 1

DRB 126 EN-01149-16-N176(325)

342

MR

THIS DRAWING AND SPECIFICATIONS, HEREIN, ARE THE PROPERTY OF DIGITAL EQUIPMENT CORPORATION AND SHALL NOT BE REPRODUCED OR COPIED OR USED IN WHOLE OR IN PART AS THE BASIS FOR THE MANUFACTURE OR SALE OF ITEMS WITHOUT WRITTEN PERMISSION.
COPYRIGHT © 1976 DIGITAL EQUIPMENT CORPORATION

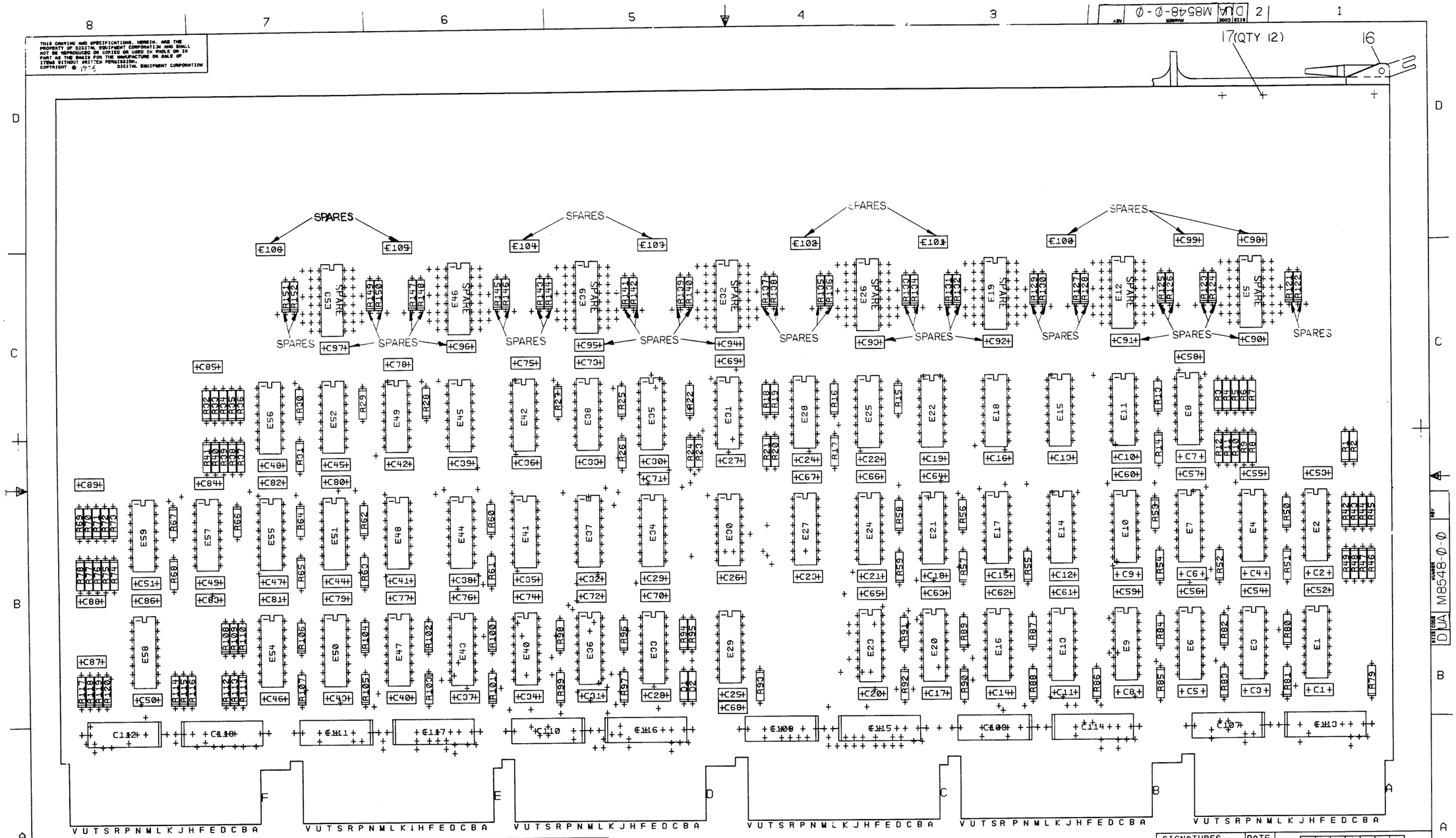

NOTES:

CHK	CHANGE NO	REV

SIGNATURES	DATE
DRN. R W Cameron	6 APR 76
CHK'D	30 AUG 76
ENG. Tom Speare	30 Aug 76
PROJ.ENG. Tom Speare	30 Aug 76
PROD. Bill Pauly	30 AUG 76
SCALE 2/1	
SHT. 2 OF 5	
ETCH REV	FIRST USED ON KL10

digital

TITLE
2K CONTROL RAM

SIZE	CODE	NUMBER	REV
D	UA	M8548-0-0	

MR 1 MS#30201

393

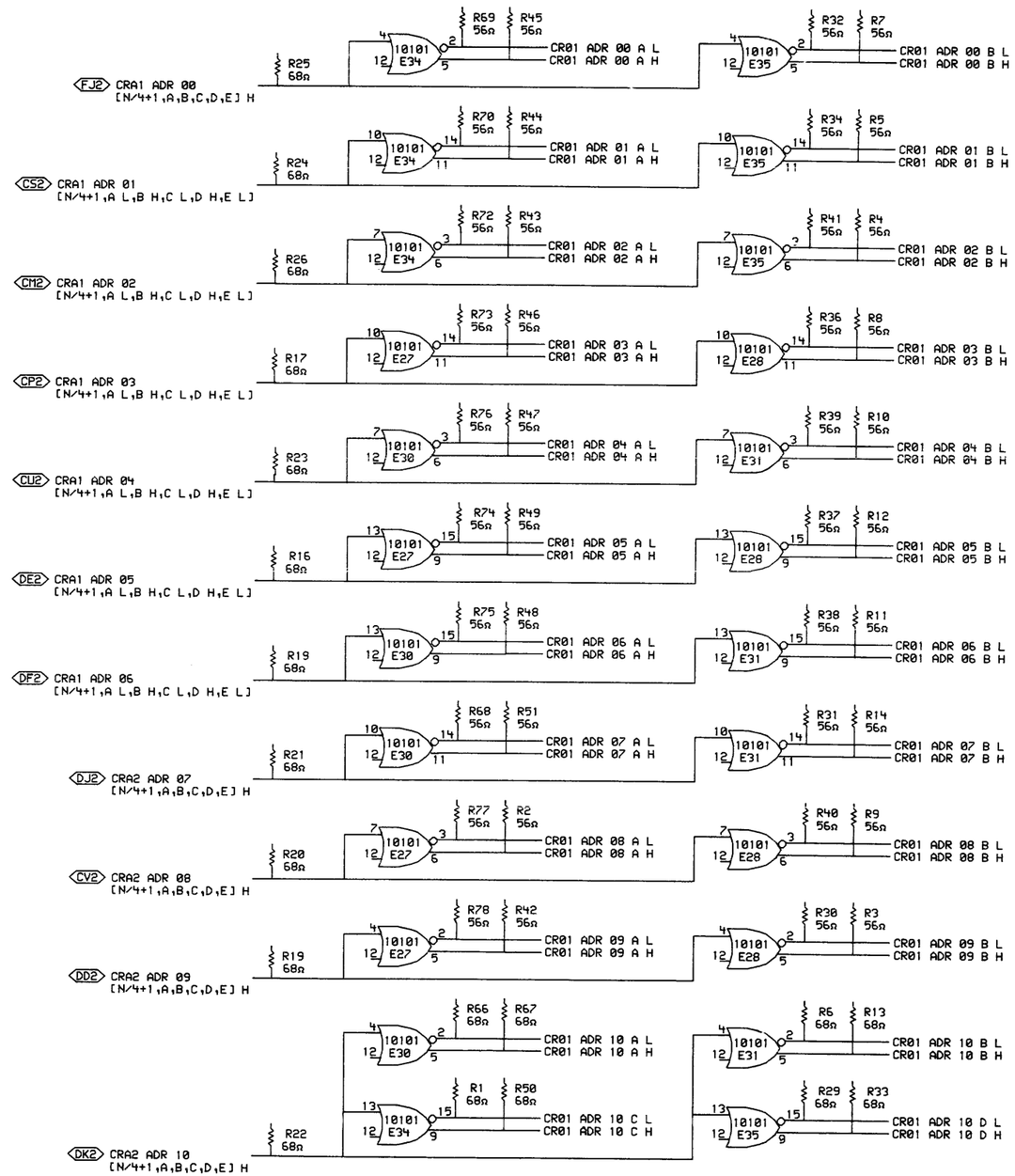

BOARD LOCATION	VARIABLES
4AF52	N=00, M=06
4AF50	N=04, M=12
4AF44	N=08, M=18
4AF42	N=12, M=24
4AF40	N=16, M=30

1 OF 7

"THIS DRAWING AND SPECIFICATIONS, HEREIN, ARE THE PROPERTY OF DIGITAL EQUIPMENT CORPORATION AND SHALL NOT BE REPRODUCED OR COPIED OR USED IN WHOLE OR IN PART AS THE BASIS FOR THE MANUFACTURE OR SALE OF ITEMS WITHOUT WRITTEN PERMISSION. COPYRIGHT © 1976, DIGITAL EQUIPMENT CORPORATION"

REVISIONS		
CHK	CHANGE NO.	REV

digital

DRN. 30-AUG-76 | ENG. 30Aug76 | DATE 30Aug76 | TITLE: 2K CONTROL RAM ADDRESS LINES

CHKD. 30Aug76 | BOARD LOCATION: SHEET 1 OF 1

CR01EA.DRW[4,161] 29-AUG-76 18:45 | NEXT HIGHER ASSEMBLY: B-DD-M8528-0

FIRST USED ON OPTION/MODEL: KL10

SIZE	CODE	NUMBER	REV.
D	CS	M8548-0-CR01	

394

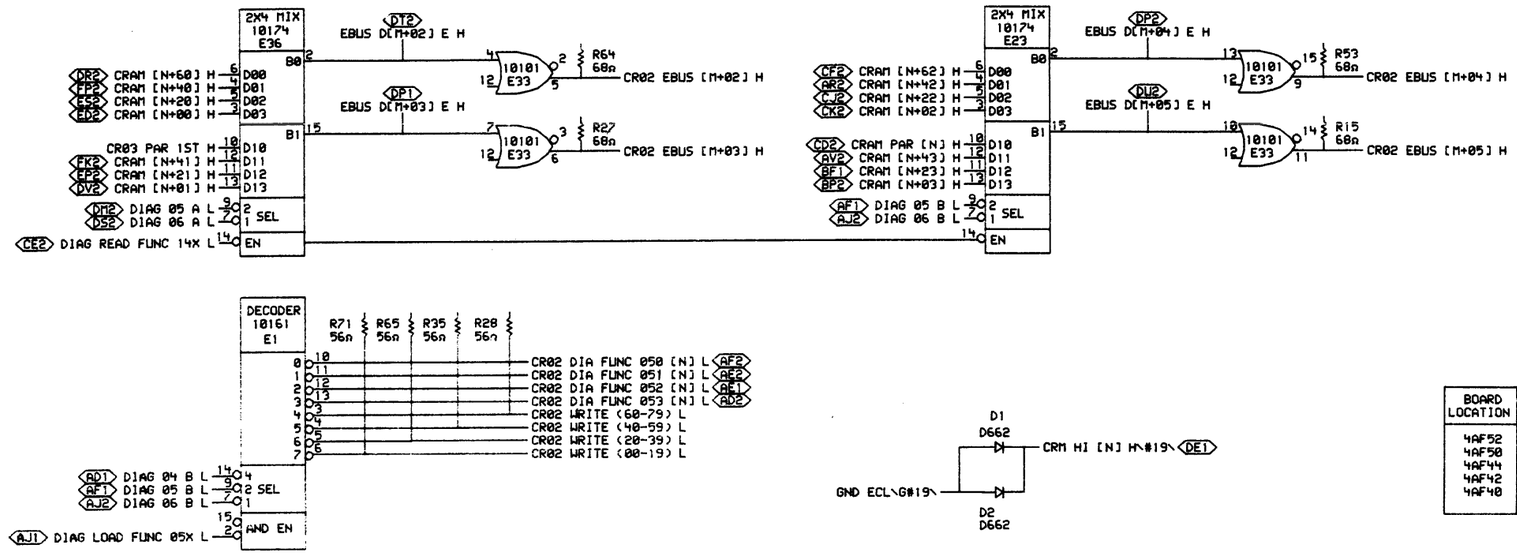

BOARD LOCATION	VARIABLES
4AF52	N=00, M=06
4AF50	N=04, M=12
4AF44	N=08, M=18
4AF42	N=12, M=24
4AF40	N=16, M=30

THE RESISTORS INSIDE THIS BOX ARE NOT CONNECTED TO ANY-
THING ON THIS BOARD OTHER THAN THEIR BACKPANEL PIN, AND
ARE NOT USED FOR ANYTHING OTHER THAN TERMINATING MANY
SIGNALS AROUND THE MACHINE. THIS BOARD HAD MANY SPARE PINS.

THE BACKPANEL WIRELIST SHOWS THE REST OF THE CONNECTIONS
FOR EACH SIGNAL TERMINATED HERE.

- API [N/4+1,CRAM BRX LOAD A H,AR 01 H,NC,CRAM BRX LOAD H,APR EBOX SPARE H] — R83 68Ω
- AMI [N/4+1,DIAG 06 B L,CRAM AD SEL 1 H,NC,NC,NC] — R80 68Ω
- ALI [N/4+1,DIAG 05 B L,NC,NC,NC,CLK INSTR 1777 L] — R81 68Ω
- AAI [N/4+1,DIAG 04 B L,NC,NC,NC,NC] — R79 68Ω
- BAI [N/4+1,SCD KERNEL MODE H,CRAM ADA SEL 1 H,NC,NC,APR MBOX CTL 06 H] — R86 68Ω
- BPI [N/4+1,MR RESET 01 H,CTL MQ SEL 1 H,DIAG READ FUNC 14X L,NC,APR MBOX CTL 03 H] — R88 68Ω
- BRI [N/4+1,CTL ARX LOAD H,CTL MQ SEL 2 H,NC,NC,NC] — R87 68Ω
- DAI [N/4+1,CON FM WRITE 00-17 L,CRAM ADA SEL 2 H,NC,CON FM WRITE 18-35 L,DIAG READ FUNC 15X L] — R96 68Ω
- DDI [N/4+1,NC,CRAM AD SEL 2 H,NC,NC,NC] — R97 68Ω
- DFI [N/4+1,CRAM BR LOAD A H,CTL MQM SEL 1 H,CTL ARR LOAD B L,NC,NC] — R99 68Ω
- DRI [N/4+1,CTL MQM EN H,CTL MQM SEL 2 H,NC,NC,NC] — R98 68Ω
- DSI [N/4+1,DIAG 06 A L,DIAG 05 A L,DIAG 04 A L,NC,NC] — R100 68Ω
- EAI [N/4+1,DIAG READ FUNC 12X H,DIAG READ FUNC 13X L,MR RESET 04 H,NC,CON UCODE STATE 07 H] — R101 68Ω
- EJI [N/4+1,CTL AR 00-08 LOAD L,CTL AR 00-11 CLR H,CTL AR 12-17 CLR H,CTL ARR CLR H,NC] — R104 68Ω
- EKI [N/4+1,CTL ARL SEL 2 H,CTL AR 09-17 LOAD L,CTL ARR LOAD A L,CTL ARR SEL 2 H,NC] — R105 68Ω
- ELI [N/4+1,CTL ARL SEL 1 H,CRAM ADA DIS H,NC,CTL ARR SEL 1 H,NC] — R106 68Ω
- ERI [N/4+1,CTL ARL SEL 4 H,CRAM AD SEL 4 H,NC,NC,CRAM ARM SEL 4 A H] — R107 68Ω
- ESI [N/4+1,CRAM AD SEL 8 H,CRAM AD BOOLE H,NC,NC,NC] — R113 68Ω
- FAI [N/4+1,CTL ARXL SEL 2 H,CTL AD TO EBUS L H,CTL ARXR SEL 2 H,CTL AD TO EBUS R H,DIAG 05 A H] — R112 68Ω
- FJI [N/4+1,CRAM ARXM SEL 4 00 H,NC,CTL ARXR SEL 1 H,CRAM ARXM SEL 4 06 H,DIAG 04 A H] — R116 68Ω
- FKI [N/4+1,CTL ARXL SEL 1 H,NC,NC,NC,DIAG 06 A H] — R115 68Ω
- FLI NC — R 14 68Ω
- FMI [N/4+1,APR FM ADR 4 H,APR FM BLOCK 2 H,NC,NC,CRAM FM ADR SEL 2 H] — R120 68Ω
- FPI [N/4+1,APR FM ADR 1 H,APR FM BLOCK 4 H,NC,CRAM BR LOAD H,NC] — R119 68Ω
- FRI [N/4+1,APR FM ADR 10 H,APR FM BLOCK 1 H,NC,NC,NC] — R118 68Ω
- FSI [N/4+1,APR FM ADR 2 H,NC,NC,NC,DIAG LOAD FUNC 05X L] — R117 68Ω

2 OF 7

"THIS DRAWING AND SPECIFICATIONS, HEREIN, A E THE PROPERTY OF DIGITAL EQUIPMENT CORPORATION A D SHALL NOT BE REPRODUCED OR COPIED OR USED IN WHOLE OR IN PART AS THE BASIS FOR THE MANUFACTURE OR SALE OF ITEMS WITHOUT WRITTEN PERMISSION.
COPYRIGHT © 1976, DIGITAL EQUIPMENT CORPORATION"

REVISIONS		
CHK	CHANGE NO.	REV

digital

DRN. J. Loosley DATE 30-AUG-76 ENG. Tom Egan DATE 30Aug76
CHK. D. Egan DATE 30Aug76 BOARD LOCATION: SHEET 1 OF 1

CR02EA.DRUC4,161] 29-AUG-76 18:56 NEXT HIGHER ASSEMBLY:
FIRST USED ON OPTION/MODEL: KL10 B-DD-M8528-0

TITLE: 2K CONTROL RAM EBUS AND DIAG

SIZE	CODE	NUMBER	REV.
D	CS	M8548-0-CR02	

395

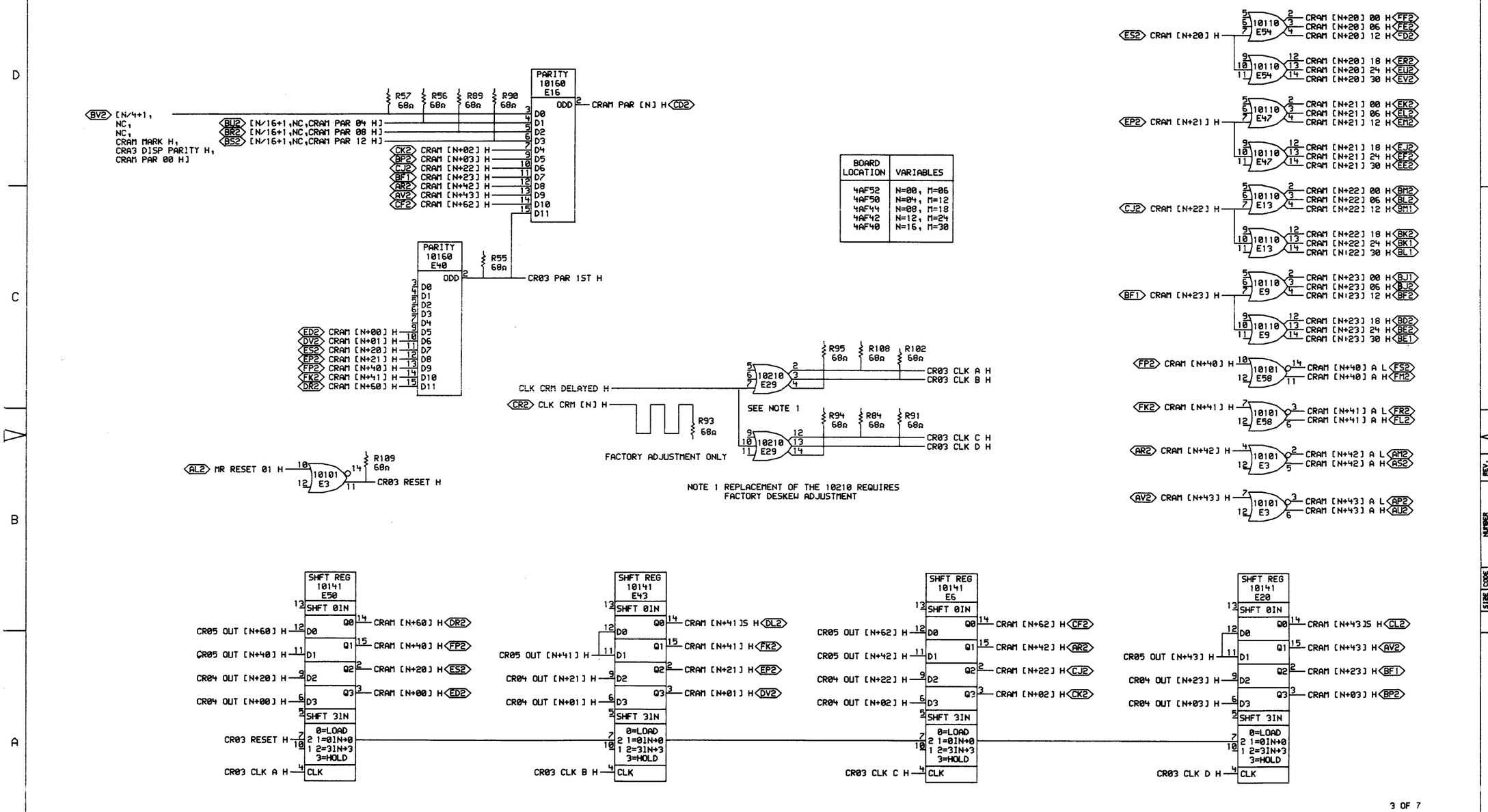

BOARD LOCATION	VARIABLES
4AF52	N=00, M=06
4AF50	N=04, M=12
4AF44	N=08, M=18
4AF42	N=12, M=24
4AF40	N=16, M=30

3 OF 7

"THIS DRAWING AND SPECIFICATIONS, HEREIN, ARE THE PROPERTY OF DIGITAL EQUIPMENT CORPORATION AND SHALL NOT BE REPRODUCED OR COPIED OR USED IN WHOLE OR IN PART AS THE BASIS FOR THE MANUFACTURE OR SALE OF ITEMS WITHOUT WRITTEN PERMISSION. COPYRIGHT © 1976, DIGITAL EQUIPMENT CORPORATION"

REVISIONS		
CHK	CHANGE NO.	REV

digital

DRN. S. Lowry DATE 30-AUG-76 ENG. Tom Egan DATE 30 Aug 76
CHK'D Tom Egan DATE 30 Aug 76 BOARD LOCATION: SHEET 1 OF 1
CR03EA.DRW[4,161] 29-AUG-76 18:58 NEXT HIGHER ASSEMBLY: B-DD-M8528-0
FIR^T USED ON OPTION/MODEL: KL10

TITLE: 2K CONTROL RAM OUTPUT SIGNALS

SIZE	CODE	NUMBER	REV.
D	CS	M8548-0-CR03	

390

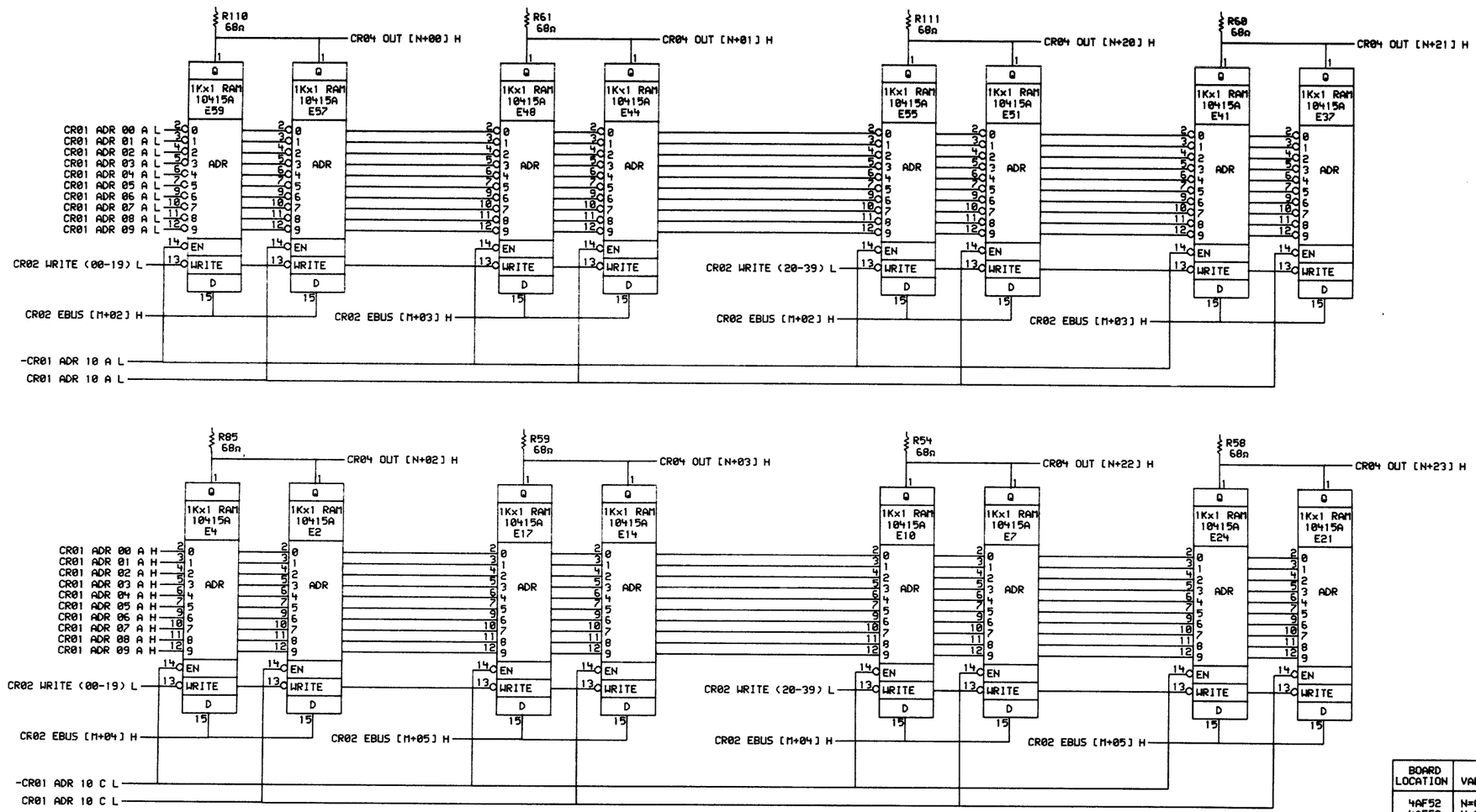

BOARD LOCATION	VARIABLES
4AF52	N=00, M=06
4AF50	N=04, M=12
4AF44	N=08, M=18
4AF42	N=12, M=24
4AF40	N=16, M=30

4 OF 7

"THIS DRAWING AND SPECIFICATIONS, HEREIN, ARE THE PROPERTY OF DIGITAL EQUIPMENT CORPORATION A D SHALL NOT BE REPRODUCED OR COPIED OR USED IN WHOLE OR IN PART AS THE BASIS FOR THE MANUFACTURE OR SALE OF ITEMS WITHOUT WRITTEN PERMISSION. COPYRIGHT © 1976, DIGITAL EQUIPMENT CORPORATION"

REVISIONS		
CHK	CHANGE NO.	REV

397

digital

DRN. D. Lavoie DATE 30-AUG-76 ENG. Tom Eggen DATE 30Aug76
CHK'D Tom Eggen DATE 30Aug76 BOARD LOCATION: SHEET 1 OF 1
CR04EA.DRW[4,161] 14-AUG-76 14:32 NEXT HIGHER ASSEMBLY:
FIRST USED ON OPTION/MODEL: KL10 B-DD-M8548-0

TITLE: 2K CONTROL RAM BITS 00-39

SIZE	CODE	NUMBER	REV.
D	CS	M8548-0-CR04	

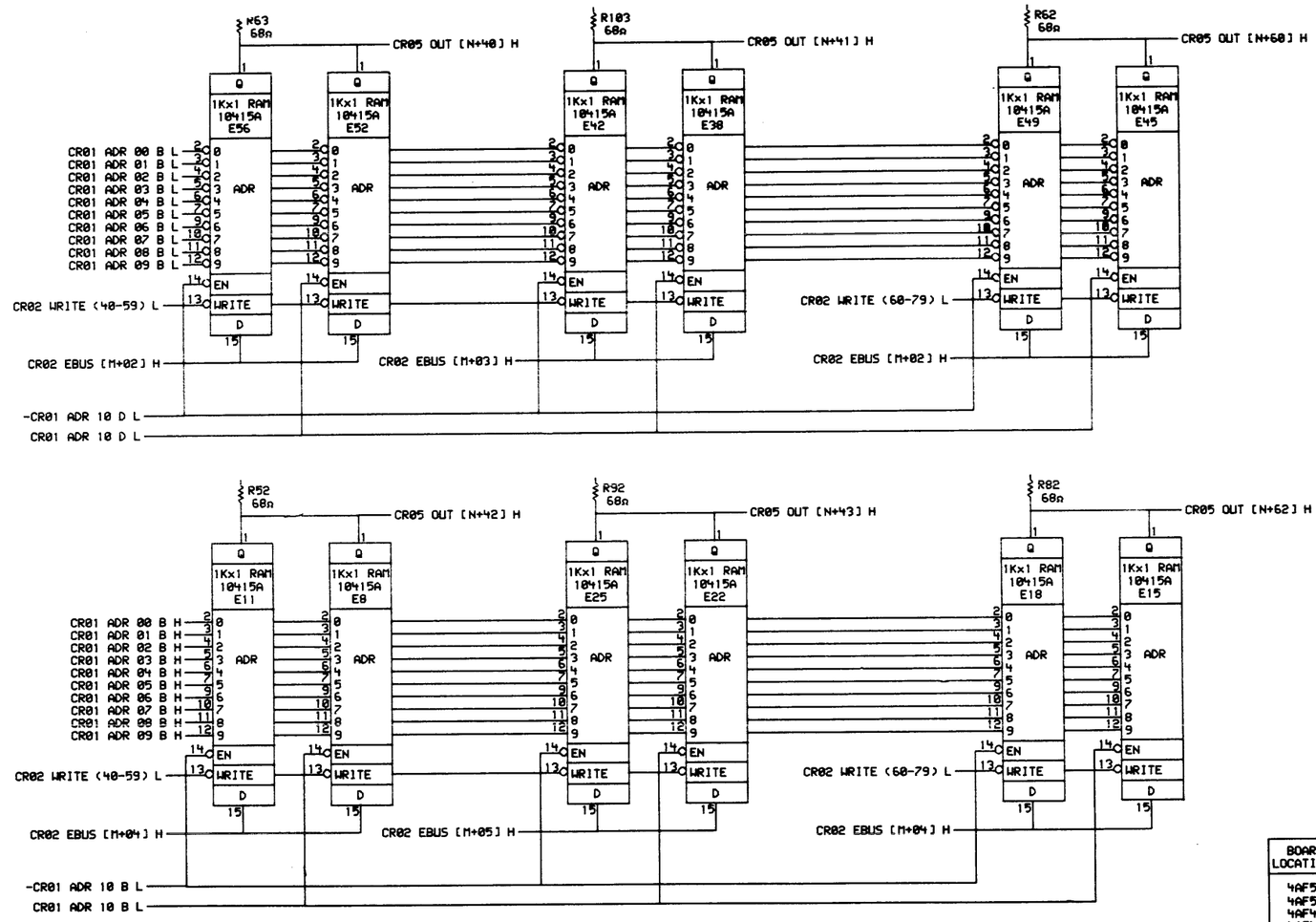

BOARD LOCATION	VARIABLES
4AF52	N=00, M=06
4AF50	N=04, M=12
4AF44	N=08, M=18
4AF42	N=12, M=24
4AF40	N=16, M=30

5 OF 7

"THIS DRAWING AND SPECIFICATIONS, HEREIN, ARE THE PROPERTY OF DIGITAL EQUIPMENT CORPORATION AND SHALL NOT BE REPRODUCED OR COPIED OR USED IN WHOLE OR IN PART AS THE BASIS FOR THE MANUFACTURE OR SALE OF ITEMS WITHOUT WRITTEN PERMISSION.
COPYRIGHT © 1976, DIGITAL EQUIPMENT CORPORATION"

REVISIONS		
CHK	CHANGE NO.	REV

digital

DRN. M. Lavoie DATE 30-AUG-76
CHK'D. Tom Egna DATE 30-AUG-76
ENG. Tom Egna DATE 30-AUG-76
CROSS REF. DRWG. 161 14-AUG-76 14:35
FIRST USED ON OPTION/MODEL: KL10
BOARD LOCATION: SHEET 1 OF 1
NEXT HIGHER ASSEMBLY: B-DD-M8548-0

TITLE: 2K CONTROL RAM BITS 40-79

SIZE	CODE	NUMBER	REV.
D	CS	M8548-0-CR05	

MR 1

348

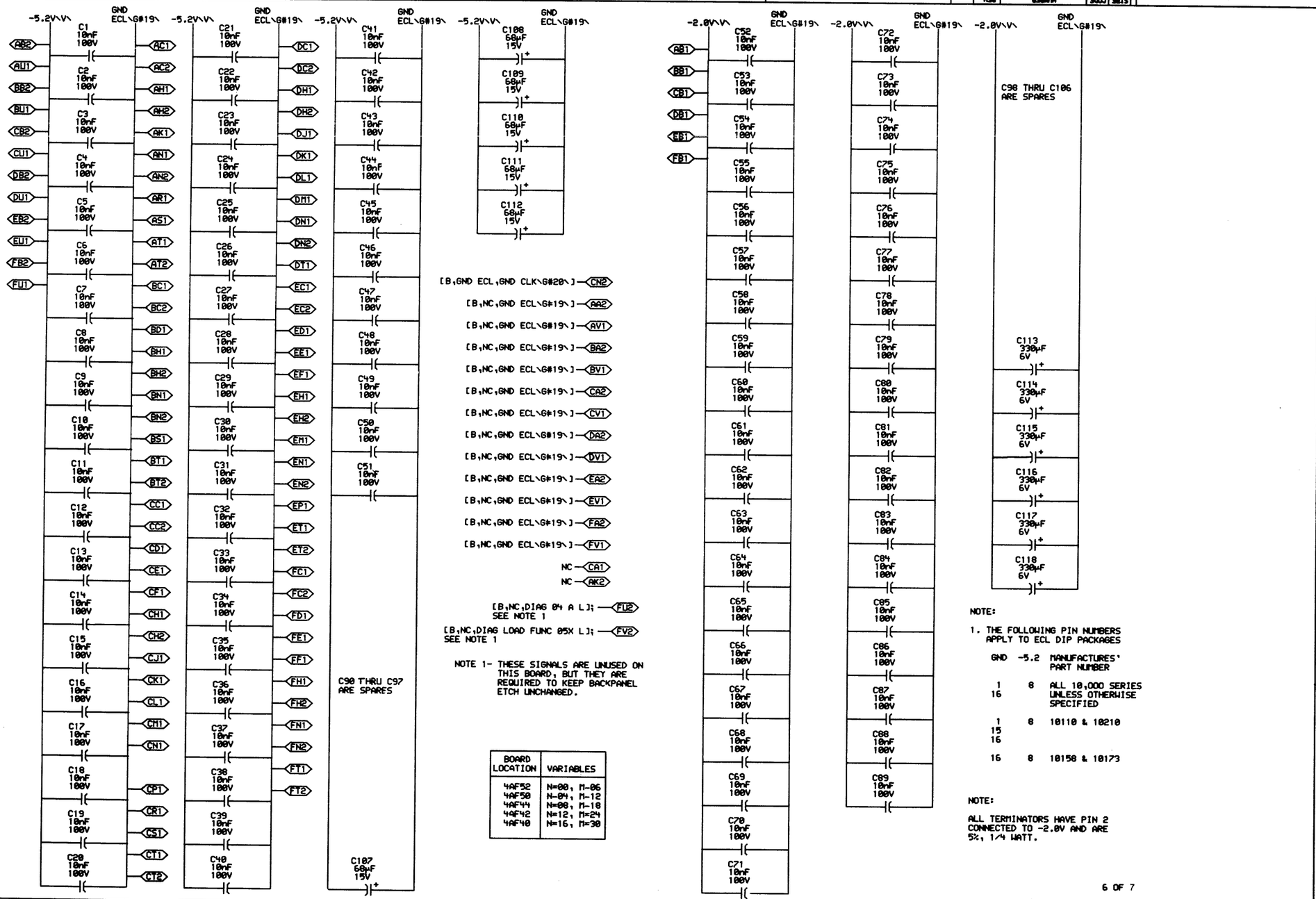

BOARD LOCATION	VARIABLES
4AF52	N=00, M-06
4AF50	N-04, M-12
4AF44	N=08, M-18
4AF42	N=12, M=24
4AF40	N=16, M=30

NOTE 1- THESE SIGNALS ARE UNUSED ON THIS BOARD, BUT THEY ARE REQUIRED TO KEEP BACKPANEL ETCH UNCHANGED.

NOTE:

1. THE FOLLOWING PIN NUMBERS APPLY TO ECL DIP PACKAGES

GND	-5.2	MANUFACTURES' PART NUMBER
1 16	8	ALL 10,000 SERIES UNLESS OTHERWISE SPECIFIED
1 15 16	8	10110 & 10210
16	8	10158 & 10173

NOTE:

ALL TERMINATORS HAVE PIN 2 CONNECTED TO -2.0V AND ARE 5%, 1/4 WATT.

6 OF 7

"THIS DRAWING AND SPECIFICATIONS, HEREIN, ARE THE PROPERTY OF DIGITAL EQUIPMENT CORPORATION AND SHALL NOT BE REPRODUCED OR COPIED OR USED IN WHOLE OR IN PART, AS THE BASIS FOR THE MANUFACTURE OR SALE OF ITEMS WITHOUT WRITTEN PERMISSION. COPYRIGHT © 1976, DIGITAL EQUIPMENT CORPORATION"

REVISIONS		
CHK	CHANGE NO.	REV

digital

DRN. J. Gormley DATE 20-SEP-76
CHKD. Tom Fagan DATE 20 Sept 76
ENG. Tom Fagan DATE 20 Sept 76
CR06EA.RLS[4,16] 17-SEP-76 17:10
BOARD LOCATION: SHEET 1 OF 1
NEXT HIGHER ASSEMBLY: B-DD-M8528-0
FIRST USED ON OPTION/MODEL: KL10

TITLE: 2K CONTROL RAM POWER, GND, CAPS

SIZE	CODE	NUMBER	REV.
D	CS	M8548-0-CR06	

MR 1

349

"THIS DRAWING AND SPECIFICATIONS, HEREIN, ARE THE PROPERTY OF DIGITAL EQUIPMENT CORPORATION AND SHALL NOT BE REPRODUCED OR COPIED OR USED IN WHOLE OR IN PART AS THE BASIS FOR THE MANUFACTURE OR SALE OF ITEMS WITHOUT WRITTEN PERMISSION. COPYRIGHT © 1976, DIGITAL EQUIPMENT CORPORATION"

BACKPANEL SYMBOLIC NAME	MICRO CODE NUMERIC NAME	BOARD BIT #	BOARD SLICE	B.P. PIN
CRAM # 00 H	CRAM 29 H	[N+21]	N=08	4E44P2
CRAM # 00 A H	CRAM 29 00 H	[N+21]	N=08	4E44K2
CRAM # 00 B H	CRAM 29 06 H	[N+21]	N=08	4E44L2
CRAM # 00 C H	CRAM 29 12 H	[N+21]	N=08	4E44M2
CRAM # 00 D H	CRAM 29 18 H	[N+21]	N=08	4E44J2
CRAM # 00 E H	CRAM 29 24 H	[N+21]	N=08	4E44F2
CRAM # 00 F H*	CRAM 29 30 H	[N+21]	N=08	4E44E2
CRAM # 01 H	CRAM 30 H	[N+22]	N=08	4C44J2
CRAM # 01 A H	CRAM 30 00 H	[N+22]	N=08	4B44M2
CRAM # 01 B H	CRAM 30 06 H	[N+22]	N=08	4B44L2
CRAM # 01 C H	CRAM 30 12 H	[N+22]	N=08	4B44M1
CRAM # 01 D H	CRAM 30 18 H	[N+22]	N=08	4B44K2
CRAM # 01 E H	CRAM 30 24 H	[N+22]	N=08	4B44K1
CRAM # 01 F H*	CRAM 30 30 H	[N+22]	N=08	4B44L1
CRAM # 02 H	CRAM 31 H	[N+23]	N=08	4B44F1
CRAM # 02 A H	CRAM 31 00 H	[N+23]	N=08	4B44J1
CRAM # 02 B H	CRAM 31 06 H	[N+23]	N=08	4B44J2
CRAM # 02 C H	CRAM 31 12 H	[N+23]	N=08	4B44F2
CRAM # 02 D H	CRAM 31 18 H	[N+23]	N=08	4B44D2
CRAM # 02 E H	CRAM 31 24 H	[N+23]	N=08	4B44E2
CRAM # 02 F H*	CRAM 31 30 H	[N+23]	N=08	4B44E1
CRAM # 03 H	CRAM 33 H	[N+21]	N=12	4E42P2
CRAM # 03 A H	CRAM 33 00 H	[N+21]	N=12	4E42K2
CRAM # 03 B H	CRAM 33 06 H	[N+21]	N=12	4E42L2
CRAM # 03 C H	CRAM 33 12 H	[N+21]	N=12	4E42M2
CRAM # 03 D H	CRAM 33 18 H	[N+21]	N=12	4E42J2
CRAM # 03 E H	CRAM 33 24 H	[N+21]	N=12	4E42F2
CRAM # 03 F H*	CRAM 33 30 H	[N+21]	N=12	4E42E2
CRAM # 04 H	CRAM 34 H	[N+22]	N=12	4C42J2
CRAM # 04 A H	CRAM 34 00 H	[N+22]	N=12	4B42M2
CRAM # 04 B H	CRAM 34 06 H	[N+22]	N=12	4B42L2
CRAM # 04 C H	CRAM 34 12 H	[N+22]	N=12	4B42M1
CRAM # 04 D H	CRAM 34 18 H	[N+22]	N=12	4B42K2
CRAM # 04 E H	CRAM 34 24 H	[N+22]	N=12	4B42K1
CRAM # 04 F H*	CRAM 34 30 H	[N+22]	N=12	4B42L1
CRAM # 05 H	CRAM 35 H	[N+23]	N=12	4B42F1
CRAM # 05 A H*	CRAM 35 00 H	[N+23]	N=12	4B42J1
CRAM # 05 B H	CRAM 35 06 H	[N+23]	N=12	4B42J2
CRAM # 05 C H	CRAM 35 12 H	[N+23]	N=12	4B42F2
CRAM # 05 D H	CRAM 35 18 H	[N+23]	N=12	4B42D2
CRAM # 05 E H	CRAM 35 24 H	[N+23]	N=12	4B42E2
CRAM # 05 F H*	CRAM 35 30 H	[N+23]	N=12	4B42E1
CRAM # 06 H	CRAM 37 H	[N+21]	N=16	4E40P2
CRAM # 06 A H	CRAM 37 00 H	[N+21]	N=16	4E40K2
CRAM # 06 B H*	CRAM 37 06 H	[N+21]	N=16	4E40L2
CRAM # 06 C H	CRAM 37 12 H	[N+21]	N=16	4E40M2
CRAM # 06 D H	CRAM 37 18 H	[N+21]	N=16	4E40J2
CRAM # 06 E H	CRAM 37 24 H	[N+21]	N=16	4E40F2
CRAM # 06 F H*	CRAM 37 30 H	[N+21]	N=16	4E40E2
CRAM # 07 H	CRAM 38 H	[N+22]	N=16	4C40J2
CRAM # 07 A H	CRAM 38 00 H	[N+22]	N=16	4B40M2
CRAM # 07 B H	CRAM 38 06 H	[N+22]	N=16	4B40L2
CRAM # 07 C H	CRAM 38 12 H	[N+22]	N=16	4B40M1
CRAM # 07 D H	CRAM 38 18 H	[N+22]	N=16	4B40K2
CRAM # 07 E H	CRAM 38 24 H	[N+22]	N=16	4B40K1
CRAM # 07 F H	CRAM 38 30 H	[N+22]	N=16	4B40L1
CRAM # 08 H	CRAM 39 H	[N+23]	N=16	4B40F1
CRAM # 08 A H	CRAM 39 00 H	[N+23]	N=16	4B40J1
CRAM # 08 B H	CRAM 39 06 H	[N+23]	N=16	4B40J2
CRAM # 08 C H	CRAM 39 12 H	[N+23]	N=16	4B40F2
CRAM # 08 D H	CRAM 39 18 H	[N+23]	N=16	4B40D2
CRAM # 08 E H	CRAM 39 24 H	[N+23]	N=16	4B40E2
CRAM # 08 F H	CRAM 39 30 H	[N+23]	N=16	4B40E1
CRAM AD BOOLE H	CRAM 24 H	[N+20]	N=04	4E50S2
CRAM AD BOOLE 00 H	CRAM 24 00 H	[N+20]	N=04	4F50F2
CRAM AD BOOLE 06 H	CRAM 24 06 H	[N+20]	N=04	4F50E2
CRAM AD BOOLE 12 H	CRAM 24 12 H	[N+20]	N=04	4F50D2
CRAM AD BOOLE 18 H	CRAM 24 18 H	[N+20]	N=04	4E50R2
CRAM AD BOOLE 24 H	CRAM 24 24 H	[N+20]	N=04	4E50U2
CRAM AD BOOLE 30 H	CRAM 24 30 H	[N+20]	N=04	4E50V2
CRAM AD CRY H	CRAM 74 H	[N+62]	N=12	4C42F2
CRAM AD SEL 1 H	CRAM 23 H	[N+23]	N=00	4B52F1
CRAM AD SEL 1 00 H	CRAM 23 00 H	[N+23]	N=00	4B52J1
CRAM AD SEL 1 06 H	CRAM 23 06 H	[N+23]	N=00	4B52J2
CRAM AD SEL 1 12 H	CRAM 23 12 H	[N+23]	N=00	4B52F2
CRAM AD SEL 1 18 H	CRAM 23 18 H	[N+23]	N=00	4B52D2
CRAM AD SEL 1 24 H	CRAM 23 24 H	[N+23]	N=00	4B52E2
CRAM AD SEL 1 30 H	CRAM 23 30 H	[N+23]	N=00	4B52E1
CRAM AD SEL 2 H	CRAM 22 H	[N+22]	N=00	4C52J2
CRAM AD SEL 2 00 H	CRAM 22 00 H	[N+22]	N=00	4B52M2
CRAM AD SEL 2 06 H	CRAM 22 06 H	[N+22]	N=00	4B52L2
CRAM AD SEL 2 12 H	CRAM 22 12 H	[N+22]	N=00	4B52M1
CRAM AD SEL 2 18 H	CRAM 22 18 H	[N+22]	N=00	4B52K2
CRAM AD SEL 2 24 H	CRAM 22 24 H	[N+22]	N=00	4B52K1
CRAM AD SEL 2 30 H	CRAM 22 30 H	[N+22]	N=00	4B52L1
CRAM AD SEL 4 H	CRAM 21 H	[N+21]	N=00	4E52P2
CRAM AD SEL 4 00 H	CRAM 21 00 H	[N+21]	N=00	4E52K2
CRAM AD SEL 4 06 H	CRAM 21 06 H	[N+21]	N=00	4E52L2
CRAM AD SEL 4 12 H	CRAM 21 12 H	[N+21]	N=00	4E52M2
CRAM AD SEL 4 18 H	CRAM 21 18 H	[N+21]	N=00	4E52J2
CRAM AD SEL 4 24 H	CRAM 21 24 H	[N+21]	N=00	4E52F2
CRAM AD SEL 4 30 H	CRAM 21 30 H	[N+21]	N=00	4E52E2
CRAM AD SEL 8 H	CRAM 20 H	[N+20]	N=00	4E52S2
CRAM AD SEL 8 00 H	CRAM 20 00 H	[N+20]	N=00	4F52F2
CRAM AD SEL 8 06 H	CRAM 20 06 H	[N+20]	N=00	4F52E2
CRAM AD SEL 8 12 H	CRAM 20 12 H	[N+20]	N=00	4F52D2
CRAM AD SEL 8 18 H	CRAM 20 18 H	[N+20]	N=00	4E52R2
CRAM AD SEL 8 24 H	CRAM 20 24 H	[N+20]	N=00	4E52U2
CRAM AD SEL 8 30 H	CRAM 20 30 H	[N+20]	N=00	4E52V2
CRAM ADA DIS H	CRAM 25 H	[N+21]	N=04	4E50P2
CRAM ADA DIS 00 H	CRAM 25 00 H	[N+21]	N=04	4E50K2
CRAM ADA DIS 06 H	CRAM 25 06 H	[N+21]	N=04	4E50L2
CRAM ADA DIS 12 H	CRAM 25 12 H	[N+21]	N=04	4E50M2
CRAM ADA DIS 18 H	CRAM 25 18 H	[N+21]	N=04	4E50J2
CRAM ADA DIS 24 H	CRAM 25 24 H	[N+21]	N=04	4E50F2
CRAM ADA DIS 30 H	CRAM 25 30 H	[N+21]	N=04	4E50E2
CRAM ADA SEL 1 H	CRAM 27 H	[N+23]	N=04	4B50F1
CRAM ADA SEL 1 00 H	CRAM 27 00 H	[N+23]	N=04	4B50J1
CRAM ADA SEL 1 06 H	CRAM 27 06 H	[N+23]	N=04	4B50J2
CRAM ADA SEL 1 12 H	CRAM 27 12 H	[N+23]	N=04	4B50F2
CRAM ADA SEL 1 18 H	CRAM 27 18 H	[N+23]	N=04	4B50D2
CRAM ADA SEL 1 24 H	CRAM 27 24 H	[N+23]	N=04	4B50E2
CRAM ADA SEL 1 30 H	CRAM 27 30 H	[N+23]	N=04	4B50E1
CRAM ADA SEL 2 H	CRAM 26 H	[N+22]	N=04	4C50J2
CRAM ADA SEL 2 00 H	CRAM 26 00 H	[N+22]	N=04	4B50M2
CRAM ADA SEL 2 06 H	CRAM 26 06 H	[N+22]	N=04	4B50L2
CRAM ADA SEL 2 12 H	CRAM 26 12 H	[N+22]	N=04	4B50M1
CRAM ADA SEL 2 18 H	CRAM 26 18 H	[N+22]	N=04	4B50K2
CRAM ADA SEL 2 24 H	CRAM 26 24 H	[N+22]	N=04	4B50K1
CRAM ADA SEL 2 30 H	CRAM 26 30 H	[N+22]	N=04	4B50L1
CRAM ADB SEL 1 H	CRAM 32 H	[N+20]	N=12	4E42S2
CRAM ADB SEL 1 00 H	CRAM 32 00 H	[N+20]	N=12	4F42F2
CRAM ADB SEL 1 06 H	CRAM 32 06 H	[N+20]	N=12	4F42E2
CRAM ADB SEL 1 12 H	CRAM 32 12 H	[N+20]	N=12	4F42D2
CRAM ADB SEL 1 18 H	CRAM 32 18 H	[N+20]	N=12	4E42R2
CRAM ADB SEL 1 24 H	CRAM 32 24 H	[N+20]	N=12	4E42U2
CRAM ADB SEL 1 30 H	CRAM 32 30 H	[N+20]	N=12	4E42V2
CRAM ADB SEL 2 H	CRAM 28 H	[N+20]	N=08	4E44S2
CRAM ADB SEL 2 00 H	CRAM 28 00 H	[N+20]	N=08	4F44F2
CRAM ADB SEL 2 06 H	CRAM 28 06 H	[N+20]	N=08	4F44E2
CRAM ADB SEL 2 12 H	CRAM 28 12 H	[N+20]	N=08	4F44D2
CRAM ADB SEL 2 18 H	CRAM 28 18 H	[N+20]	N=08	4E44R2
CRAM ADB SEL 2 24 H	CRAM 28 24 H	[N+20]	N=08	4E44U2
CRAM ADB SEL 2 30 H	CRAM 28 30 H	[N+20]	N=08	4E44V2
CRAM ARM SEL 1 H	CRAM 66 H	[N+62]	N=04	4C50F2
CRAM ARM SEL 2 H	CRAM 64 H	[N+60]	N=04	4D50R2
CRAM ARM SEL 4 H	CRAM 45 H	[N+41]	N=04	4F50K2
CRAM ARM SEL 4 A H	CRAM 45 A H	[N+41]	N=04	4F50L2
CRAM ARM SEL 4 A L*	CRAM 45 A L	[N+41]	N=04	4F50R2
CRAM ARM SEL 4S H*	CRAM 45S H	[N+41]	N=04	4D50L2
CRAM ARXM SEL 1 H	CRAM 70 H	[N+62]	N=08	4C44F2
CRAM ARXM SEL 2 H	CRAM 68 H	[N+60]	N=08	4D44R2
CRAM ARXM SEL 4 H	CRAM 36 H	[N+20]	N=16	4E40S2
CRAM ARXM SEL 4 00 H	CRAM 36 00 H	[N+20]	N=16	4F40F2
CRAM ARXM SEL 4 06 H	CRAM 36 06 H	[N+20]	N=16	4F40E2
CRAM ARXM SEL 4 12 H*	CRAM 36 12 H	[N+20]	N=16	4F40D2
CRAM ARXM SEL 4 18 H*	CRAM 36 18 H	[N+20]	N=16	4E40R2
CRAM ARXM SEL 4 24 H*	CRAM 36 24 H	[N+20]	N=16	4E40U2
CRAM ARXM SEL 4 30 H*	CRAM 36 30 H	[N+20]	N=16	4E40V2
CRAM BR LOAD H	CRAM 52 H	[N+40]	N=12	4F42P2
CRAM BR LOAD A H	CRAM 52 A H	[N+40]	N=12	4F42M2
CRAM BR LOAD A L*	CRAM 52 A L	[N+40]	N=12	4F42S2
CRAM BRX LOAD H	CRAM 54 H	[N+42]	N=12	4A42R2
CRAM BRX LOAD A H	CRAM 54 A H	[N+42]	N=12	4A42S2
CRAM BRX LOAD A L*	CRAM 54 A L	[N+42]	N=12	4A42M2
CRAM COND 00 H	CRAM 17 H	[N+01]	N=16	4D40V2
CRAM COND 01 H	CRAM 18 H	[N+02]	N=16	4C40K2
CRAM COND 02 H	CRAM 19 H	[N+03]	N=16	4B40P2
CRAM COND 03 H	CRAM 53 H	[N+41]	N=12	4F42K2
CRAM COND 03 A H	CRAM 53 A H	[N+41]	N=12	4F42L2
CRAM COND 03 A L	CRAM 53 A L	[N+41]	N=12	4F42R2
CRAM COND 03S H	CRAM 53S H	[N+41]	N=12	4D42L2
CRAM COND 04 H	CRAM 55 H	[N+43]	N=12	4A42V2
CRAM COND 04 A H	CRAM 55 A H	[N+43]	N=12	4A42U2
CRAM COND 04 A L	CRAM 55 A L	[N+43]	N=12	4A42P2
CRAM COND 04S H	CRAM 55S H	[N+43]	N=12	4C42L2
CRAM COND 05 H	CRAM 59 H	[N+43]	N=16	4A40V2
CRAM COND 05 A H	CRAM 59 A H	[N+43]	N=16	4A40U2
CRAM COND 05 A L	CRAM 59 A L	[N+43]	N=16	4A40P2
CRAM COND 05S H	CRAM 59S H	[N+43]	N=16	4C40L2
CRAM FE LOAD H	CRAM 04 H	[N+00]	N=04	4E50D2
CRAM FM ADR SEL 1 H	CRAM 58 H	[N+42]	N=16	4A40R2
CRAM FM ADR SEL 1 A H*	CRAM 58 A H	[N+42]	N=16	4A40S2
CRAM FM ADR SEL 1 A L*	CRAM 58 A L	[N+42]	N=16	4A40M2
CRAM FM ADR SEL 2 H	CRAM 57 H	[N+41]	N=16	4F40K2
CRAM FM ADR SEL 2 A H*	CRAM 57 A H	[N+41]	N=16	4F40L2
CRAM FM ADR SEL 2 A L*	CRAM 57 A L	[N+41]	N=16	4F40R2
CRAM FM ADR SEL 2S H	CRAM 57S H	[N+41]	N=16	4D40L2
CRAM FM ADR SEL 4 H	CRAM 56 H	[N+40]	N=16	4F40P2
CRAM FM ADR SEL 4 A H*	CRAM 56 A H	[N+40]	N=16	4F40M2
CRAM FM ADR SEL 4 A L*	CRAM 56 A L	[N+40]	N=16	4F40S2
CRAM J00 H	CRAM 05 H	[N+01]	N=04	4D50V2
CRAM J01 H	CRAM 06 H	[N+02]	N=04	4C50K2
CRAM J02 H	CRAM 07 H	[N+03]	N=04	4B50P2
CRAM J03 H	CRAM 08 H	[N+00]	N=08	4E44D2
CRAM J04 H	CRAM 09 H	[N+01]	N=08	4D44V2
CRAM J05 H	CRAM 10 H	[N+02]	N=08	4C44K2
CRAM J06 H	CRAM 11 H	[N+03]	N=08	4B44P2
CRAM J07 H	CRAM 12 H	[N+00]	N=12	4E42D2
CRAM J08 H	CRAM 13 H	[N+01]	N=12	4D42V2
CRAM J09 H	CRAM 14 H	[N+02]	N=12	4C42K2
CRAM J10 H	CRAM 15 H	[N+03]	N=12	4B42P2
CRAM MARK H	CRAM 43 H	[N+43]	N=00	4A52V2
CRAM MARK A H*	CRAM 43 A H	[N+43]	N=00	4A52U2
CRAM MARK A L*	CRAM 43 A L	[N+43]	N=00	4A52P2
CRAM MARKS H*	CRAM 43S H	[N+43]	N=00	4C52L2
CRAM MEM 00 H	CRAM 48 H	[N+40]	N=08	4F44P2
CRAM MEM 00 A H*	CRAM 48 A H	[N+40]	N=08	4F44M2
CRAM MEM 00 A L*	CRAM 48 A L	[N+40]	N=08	4F44S2
CRAM MEM 01 H	CRAM 49 H	[N+41]	N=08	4F44K2
CRAM MEM 01 A H*	CRAM 49 A H	[N+41]	N=08	4F44L2
CRAM MEM 01 A L*	CRAM 49 A L	[N+41]	N=08	4F44R2
CRAM MEM 01S H*	CRAM 49S H	[N+41]	N=08	4D44L2
CRAM MEM 02 H	CRAM 50 H	[N+42]	N=08	4A44R2
CRAM MEM 02 A H	CRAM 50 A H	[N+42]	N=08	4A44S2
CRAM MEM 02 A L	CRAM 50 A L	[N+42]	N=08	4A44M2
CRAM MEM 03 H	CRAM 51 H	[N+43]	N=08	4A44V2
CRAM MEM 03 A H*	CRAM 51 A H	[N+43]	N=08	4A44U2
CRAM MEM 03 A L*	CRAM 51 A L	[N+43]	N=08	4A44P2
CRAM MEM 03S H*	CRAM 51S H	[N+43]	N=08	4C44L2
CRAM MQ SEL H	CRAM 16 H	[N+00]	N=16	4E40D2
CRAM SCAD 1 H	CRAM 03 H	[N+03]	N=00	4B52P2
CRAM SCAD 2 H	CRAM 02 H	[N+02]	N=00	4C52K2
CRAM SCAD 4 H	CRAM 01 H	[N+01]	N=00	4D52V2
CRAM SCADA EN L	CRAM 00 H	[N+00]	N=00	4E52D2
CRAM SCADA SEL 1 H	CRAM 41 H	[N+41]	N=00	4F52K2
CRAM SCADA SEL 1 A H*	CRAM 41 A H	[N+41]	N=00	4F52L2
CRAM SCADA SEL 1 A L*	CRAM 41 A L	[N+41]	N=00	4F52R2
CRAM SCADA SEL 1S H*	CRAM 41S H	[N+41]	N=00	4D52L2
CRAM SCADA SEL 2 H	CRAM 40 H	[N+40]	N=00	4F52P2
CRAM SCADA SEL 2 A H*	CRAM 40 A H	[N+40]	N=00	4F52M2
CRAM SCADA SEL 2 A L*	CRAM 40 A L	[N+40]	N=00	4F52S2
CRAM SCADB SEL 1 H	CRAM 60 H	[N+60]	N=00	4D52R2
CRAM SCADB SEL 2 H	CRAM 42 H	[N+42]	N=00	4A52R2
CRAM SCADB SEL 2 A H*	CRAM 42 A H	[N+42]	N=00	4A52S2
CRAM SCADB SEL 2 A L*	CRAM 42 A L	[N+42]	N=00	4A52M2
CRAM SCM SEL 2 H	CRAM 62 H	[N+62]	N=00	4C52F2
CRAM SH-ARMM SEL 1 H	CRAM 47 H	[N+43]	N=04	4A50V2
CRAM SH-ARMM SEL 1 A H	CRAM 47 A H	[N+43]	N=04	4A50U2
CRAM SH-ARMM SEL 1 A L	CRAM 47 A L	[N+43]	N=04	4A50P2
CRAM SH-ARMM SEL 1S H*	CRAM 47S H	[N+43]	N=04	4C50L2
CRAM SH-ARMM SEL 2 H	CRAM 46 H	[N+42]	N=04	4A50R2
CRAM SH-ARMM SEL 2 A H	CRAM 46 A H	[N+42]	N=04	4A50S2
CRAM SH-ARMM SEL 2 A L	CRAM 46 A L	[N+42]	N=04	4A50M2
CRAM T 00 H	CRAM 76 H	[N+60]	N=16	4D40R2
CRAM T 01 H	CRAM 78 H	[N+62]	N=16	4C40F2
CRAM VMA SEL 1 H	CRAM 72 H	[N+60]	N=12	4D42R2
CRAM VMA SEL 2 H	CRAM 44 H	[N+40]	N=04	4F50P2
CRAM VMA SEL 2 A H	CRAM 44 A H	[N+40]	N=04	4F50M2
CRAM VMA SEL 2 A L*	CRAM 44 A L	[N+40]	N=04	4F50S2

* UNUSED ON BACKPANEL

7 OF 7

DRN.		9/3/76
CHK'D	Tom Eggert	15 Sept 76
ENG.	Tom Eggert	17 Sept 76
PROJ. ENG.	Tom Eggert	17 Sept 76
PROD.		
NEXT HIGHER ASSY.	B-DD-M8548-0	
SCALE	NONE	
SHEET	1 OF 1	

FIRST USED ON: KL10

digital

TITLE: CRAM NAMES

SIZE	CODE	NUMBER	REV.
D	CS	M8548-Ø-CRAM	

DIST.

MR 1

400

REVISIONS: REV. | CHANGE NO. | CHK.

DEC FORM NO. DBD 305-0

AA1	EBUS D21 L\C\
AA2	GND\G\
AB1	SPARE PIN2 EBUS\C\
AB2	GND\G\
AC1	SPARE PIN3 EBUS\C\
AC2	GND\G\
AD1	EBUS PI07 L\C\
AD2	SPARE PIN4 EBUS\C\
AE1	EBUS PI06 L\C\
AE2	SPARE PIN5 EBUS\C\
AF1	EBUS PI04 L\C\
AF2	EBUS PI03 L\C\
AH1	SPARE PIN6 EBUS\C\
AH2	EBUS DATA DISABLE L\C\
AJ1	EBUS PI01 L\C\
AJ2	EBUS PI02 L\C\
AK1	SPARE PIN7 EBUS\C\
AK2	EBUS PI05 L\C\
AL1	EBUS D33 L\C\
AL2	SPARE PIN8 EBUS\C\
AM1	EBUS D34 L\C\
AM2	SPARE PIN9 EBUS\C\
AN1	GND\G\
AN2	EBUS D30 L\C\
AP1	GND\G\
AP2	EBUS D29 L\C\
AR1	GND\G\
AR2	SPARE PIN10 EBUS\C\
AS1	GND\G\
AS2	SPARE PIN11 EBUS\C\
AT1	GND\G\
AT2	SPARE PIN12 EBUS\C\
AU1	SPARE PIN13 EBUS\C\
AU2	SPARE PIN14 EBUS\C\
AV1	SPARE PIN15 EBUS\C\
AV2	GND\G\

BA1	EBUS D35 L\C\
BA2	GND\G\
BB1	GND\G\
BB2	GND\G\
BC1	EBUS D32 L\C\
BC2	GND\G\
BD1	GND\G\
BD2	EBUS D22 L\C\
BE1	GND\G\
BE2	EBUS D31 L\C\
BF1	EBUS RESET L\C\
BF2	EBUS D27 L\C\
BH1	EBUS D26 L\C\
BH2	EBUS D20 L\C\
BJ1	CL1 EBUS XFER 15 L\C\
BJ2	CDS1 EBUS CLK 15 L\C\
BK1	SPARE PIN18 EBUS\C\
BK2	SPARE PIN19 EBUS\C\
BL1	SPARE PIN20 EBUS\C\
BL2	SPARE PIN21 EBUS\C\
BM1	EBUS D10 L\C\
BM2	SPARE PIN22 EBUS\C\
BN1	EBUS D11 L\C\
BN2	SPARE PIN23 EBUS\C\
BP1	EBUS D12 L\C\
BP2	SPARE PIN24 EBUS\C\
BR1	SPARE PIN25 EBUS\C\
BR2	SPARE PIN26 EBUS\C\
BS1	EBUS D09 L\C\
BS2	SPARE PIN27 EBUS\C\
BT1	GND\G\
BT2	SPARE PIN28 EBUS\C\
BU1	SPARE PIN29 EBUS\C\
BU2	EBUS D25 L\C\
BV1	EBUS D02 L\C\
BV2	GND\G\

CA1	SPARE PIN30 EBUS\C\
CA2	GND\G\
CB1	SPARE PIN32 EBUS\C\
CB2	GND\G\
CC1	EBUS D24 L\C\
CC2	GND\G\
CD1	SPARE PIN33 EBUS\C\
CD2	SPARE PIN34 EBUS\C\
CE1	CDS1 EBUS DEMAND 15 L\C\
CE2	SPARE PIN35 EBUS\C\
CF1	SPARE PIN36 EBUS\C\
CF2	SPARE PIN37 EBUS\C\
CH1	EBUS D23 L\C\
CH2	EBUS D15 L\C\
CJ1	EBUS D28 L\C\
CJ2	EBUS D01 L\C\
CK1	EBUS D06 L\C\
CK2	EBUS D13 L\C\
CL1	EBUS D17 L\C\
CL2	EBUS D00 L\C\
CM1	EBUS D14 L\C\
CM2	EBUS D05 L\C\
CN1	GND\G\
CN2	EBUS D00 L\C\
CP1	GND\G\
CP2	EBUS D19 L\C\
CR1	GND\G\
CR2	EBUS D03 L\C\
CS1	GND\G\
CS2	EBUS D18 L\C\
CT1	GND\G\
CT2	EBUS PARITY L\C\
CU1	EBUS D04 L\C\
CU2	EBUS D16 L\C\
CV1	EBUS D07 L\C\
CV2	GND\G\

DA1	SPARE PIN38 EBUS\C\
DA2	GND\G\
DB1	SPARE PIN40 EBUS\C\
DB2	GND\G\
DC1	SPARE PIN41 EBUS\C\
DC2	GND\G\
DD1	GND\G\
DD2	SPARE PIN42 EBUS\C\
DE1	GND\G\
DE2	SPARE PIN43 EBUS\C\
DF1	SPARE PIN44 EBUS\C\
DF2	GND\G\
DH1	SPARE PIN46 EBUS\C\
DH2	EBUS F01 L\C\
DJ1	GND\G\
DJ2	GND\G\
DK1	GND\G\
DK2	EBUS F00 L\C\
DL1	EBUS F02 L\C\
DL2	GND\G\
DM1	EBUS ACKN L\C\
DM2	EBUS C506 L\C\
DN1	GND\G\
DN2	GND\G\
DP1	EBUS C505 L\C\
DP2	EBUS C504 L\C\
DR1	EBUS C503 L\C\
DR2	EBUS C502 L\C\
DS1	EBUS C501 L\C\
DS2	EBUS DIAG STROBE L\C\
DT1	GND\G\
DT2	GND\G\
DU1	GND\G\
DU2	EBUS DS05 L\C\
DV1	EBUS C500 L\C\
DV2	GND\G\

"THIS DRAWING AND SPECIFICATIONS, HEREIN, ARE THE PROPERTY OF DIGITAL EQUIPMENT CORPORATION AND SHALL NOT BE REPRODUCED OR COPIED OR USED IN WHOLE OR IN PART AS THE BASIS FOR THE MANUFACTURE OR SALE OF ITEMS WITHOUT WRITTEN PERMISSION.
COPYRIGHT © 1975, DIGITAL EQUIPMENT CORPORATION"

REVISIONS		
CHK	CHANGE NO.	REV

digital

DRN. J. Loosley DATE 17-OCT-75
CHK. M. Gilbert DATE 10/20/75
ENG. N. Gaudet DATE 10/20/75
BOARD LOCATION: SHEET 1 OF 1

EBUS[4,426] 10-OCT-75 10:44
FIRST USED ON OPTION/MODEL: KL10
NEXT HIGHER ASSEMBLY: B-DD-KL10-0

TITLE: EBUS CABLE

SIZE	CODE	NUMBER	REV.
D	IC	KL10-0-EBUS	

401

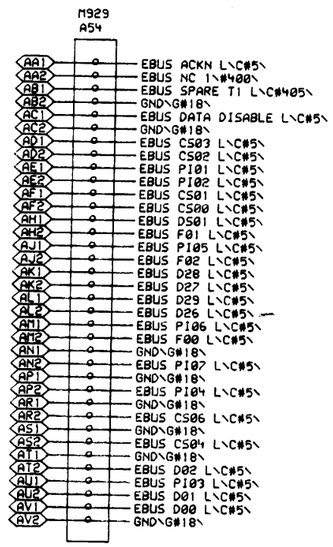

OPTION	CABLE LOCATION
KL10	4AB01
DTE20(NO RH20)	2AB10
DTE20 & RH20	2AB37

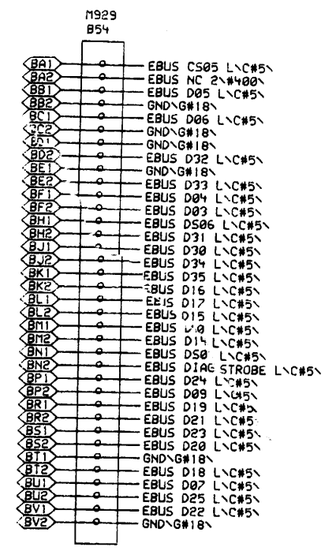

1 OF 2

"THIS DRAWING AND SPECIFICATIONS, HEREIN, ARE THE PROPERTY OF DIGITAL EQUIPMENT CORPORATION AND SHALL NOT BE REPRODUCED OR COPIED OR USED IN WHOLE OR IN PART AS THE BASIS FOR THE MANUFACTURE OR SALE OF ITEMS WITHOUT WRITTEN PERMISSION.
COPYRIGHT © 1975, DIGITAL EQUIPMENT CORPORATION"

REVISIONS		
CHK	CHANGE NO.	REV

digital

DRN. DATE 21-OCT-75 ENG. DATE 21 Oct 75
CHK. DATE 21 Oct 75 BOARD LOCATION: SHEET 1 OF 1
IOC(4,426) 07-SEP-75 15:49 NEXT HIGHER ASSEMBLY:
FIRST USED ON OPTION/MODEL: KL10 B-DD-KL10-0

TITLE EBUS CABLE I/O TO CPU

SIZE	CODE	NUMBER	REV
D	IC	KL10-0-IOC1	

402

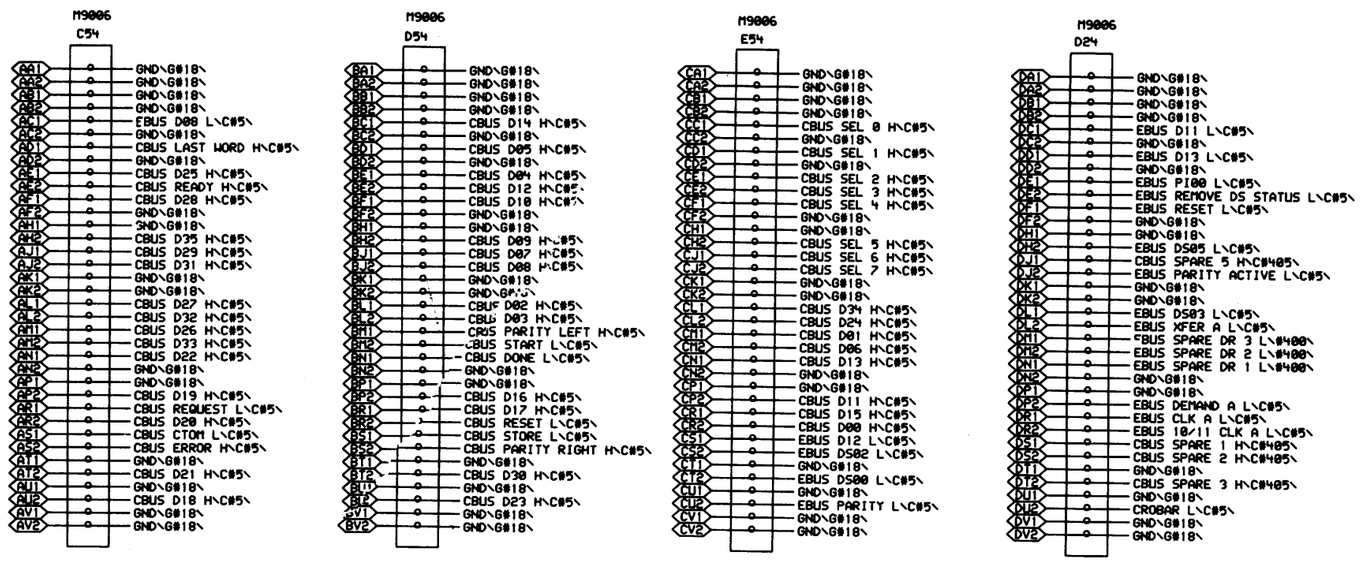

OPTION	CABLE LOCATION
KL10	4CF01
DTE20(NO RH20)	2CF10
DTE20 & RH20	2CF37

2 OF 2

"THIS DRAWING AND SPECIFICATIONS, HEREIN, ARE THE PROPERTY OF DIGITAL EQUIPMENT CORPORATION AND SHALL NOT BE REPRODUCED OR COPIED OR USED IN WHOLE OR IN PART AS THE BASIS FOR THE MANUFACTURE OR SALE OF ITEMS WITHOUT WRITTEN PERMISSION.
COPYRIGHT © 1975, DIGITAL EQUIPMENT CORPORATION"

REVISIONS		
CHK	CHANGE NO.	REV

digital

DRN. 14-OCT-75 ENG. DATE
CHK'D. 20 Oct 75 BOARD LOCATION: DATE 20 Oct 75
SHEET 1 OF 1
IOC2(4,426) 07-SEP-75 15:57 NEXT HIGHER ASSEMBLY: B-DD-KL10-0
FIRST USED ON OPTION/MODEL: KL10

TITLE: EBUS+CBUS CABLES I/O TO CPU

SIZE	CODE	NUMBER	REV.
D	IC	KL10-0-IOC2	

8C20C/
M9006

AA1	[B,NC,GND TTL\G#18\]
AB1	[B,NC,GND TTL\G#18\]
AC1	SBUS[N] D00 L\C\
AD1	SBUS[N] D18 L\C\
AE1	SBUS[N] D01 L\C\
AF1	SBUS[N] D19 L\C\
AH1	GND TTL\G#18\
AJ1	SBUS[N] D02 L\C\
AK1	NC
AL1	SBUS[N] D20 L\C\
AM1	SBUS[N] D03 L\C\
AN1	SBUS[N] D21 L\C\
AP1	GND TTL\G#18\
AR1	SBUS[N] ADR PAR ERR L\C\
AS1	SBUS[N] SPARE LINE #1\C\
AT1	GND TTL\G#18\
AU1	[B,NC,GND TTL\G#18\]
AV1	[B,NC,GND TTL\G#18\]
BA1	[B,NC,GND TTL\G#18\]
BB1	[B,NC,GND TTL\G#18\]
BC1	SBUS[N] D04 L\C\
BD1	SBUS[N] D22 L\C\
BE1	SBUS[N] D05 L\C\
BF1	SBUS[N] D23 L\C\
BH1	GND TTL\G#18\
BJ1	SBUS[N] D06 L\C\
BK1	NC
BL1	SBUS[N] D24 L\C\
BM1	SBUS[N] D07 L\C\
BN1	SBUS[N] D25 L\C\
BP1	GND TTL\G#18\
BR1	SBUS[N] D08 L\C\
BS1	SBUS[N] D26 L\C\
BT1	GND TTL\G#18\
BU1	[B,NC,GND TTL\G#18\]
BV1	[B,NC,GND TTL\G#18\]

AA2	[B,NC,GND TTL\G#18\]
AB2	[B,NC,GND TTL\G#18\]
AC2	GND TTL\G#18\
AD2	GND TTL\G#18\
AE2	SBUS[N] ADR 14 L\C\
AF2	GND TTL\G#18\
AH2	SBUS[N] ADR 15 L\C\
AJ2	SBUS[N] ADR 16 L\C\
AK2	GND TTL\G#18\
AL2	SBUS[N] ADR 17 L\C\
AM2	SBUS[N] ADR 18 L\C\
AN2	GND TTL\G#18\
AP2	SBUS[N] ADR 19 L\C\
AR2	SBUS[N] ADR 20 L\C\
AS2	SBUS[N] ADR 21 L\C\
AT2	SBUS[N] ADR 22 L\C\
AU2	SBUS[N] ADR 23 L\C\
AV2	GND TTL\G#18\
BA2	[B,NC,GND TTL\G#18\]
BB2	[B,NC,GND TTL\G#18\]
BC2	GND TTL\G#18\
BD2	GND TTL\G#18\
BE2	SBUS[N] ADR 24 L\C\
BF2	GND TTL\G#18\
BH2	SBUS[N] ADR 25 L\C\
BJ2	SBUS[N] ADR 26 L\C\
BK2	GND TTL\G#18\
BL2	SBUS[N] ADR 27 L\C\
BM2	SBUS[N] ADR 28 L\C\
BN2	GND TTL\G#18\
BP2	SBUS[N] ADR 29 L\C\
BR2	SBUS[N] ADR 30 L\C\
BS2	SBUS[N] ADR 31 L\C\
BT2	SBUS[N] ADR 32 L\C\
BU2	SBUS[N] ADR 33 L\C\
BV2	GND TTL\G#18\

OPTION	CABLE LOCATION	VARIABLE
KL10	4AD02 4AD03	N = 0 N = 1
MA20	(3,5)AD01 (3,5)AD54	N = 0,1 N = 0,1
DMA20	1AD01 NONE	N = 0 N = 1

8C20C/
M9006

CA1	[B,NC,GND TTL\G#18\]
CB1	[B,NC,GND TTL\G#18\]
CC1	SBUS[N] MEM RESET L\C\
CD1	SBUS[N] D30 L\C\
CE1	SBUS[N] D09 L\C\
CF1	SBUS[N] D27 L\C\
CH1	GND TTL\G#18\
CJ1	SBUS[N] D10 L\C\
CK1	NC
CL1	SBUS[N] D28 L\C\
CM1	SBUS[N] D11 L\C\
CN1	SBUS[N] D29 L\C\
CP1	GND TTL\G#18\
CR1	SBUS[N] D12 L\C\
CS1	CROBAR L\C\
CT1	GND TTL\G#18\
CU1	[B,NC,GND TTL\G#18\]
CV1	[B,NC,GND TTL\G#18\]
DA1	[B,NC,GND TTL\G#18\]
DB1	[B,NC,GND TTL\G#18\]
DC1	SBUS[N] D13 L\C\
DD1	SBUS[N] D31 L\C\
DE1	SBUS[N] D14 L\C\
DF1	SBUS[N] D32 L\C\
DH1	GND TTL\G#18\
DJ1	SBUS[N] D15 L\C\
DK1	NC
DL1	SBUS[N] D33 L\C\
DM1	SBUS[N] D16 L\C\
DN1	SBUS[N] D34 L\C\
DP1	GND TTL\G#18\
DR1	SBUS[N] D17 L\C\
DS1	SBUS[N] D35 L\C\
DT1	GND TTL\G#18\
DU1	[B,NC,GND TTL\G#18\]
DV1	[B,NC,GND TTL\G#18\]

CA2	[B,NC,GND TTL\G#18\]
CB2	[B,NC,GND TTL\G#18\]
CC2	GND TTL\G#18\
CD2	GND TTL\G#18\
CE2	SBUS[N] ADR 34 L\C\
CF2	GND TTL\G#18\
CH2	SBUS[N] ADR 35 L\C\
CJ2	SBUS[N] ADR PAR L\C\
CK2	GND TTL\G#18\
CL2	SBUS[N] WR RQ L\C\
CM2	SBUS[N] RD RQ L\C\
CN2	GND TTL\G#18\
CP2	SBUS[N] DATA PAR L\C\
CR2	SBUS[N] CLK INT L\C\
CS2	SBUS[N] RQ 3 L\C\
CT2	SBUS[N] RQ 2 L\C\
CU2	SBUS[N] CLK [N+1,SPARE\#400\,EXT] L\C\
CV2	GND TTL\G#18\
DA2	[B,NC,GND TTL\G#18\]
DB2	[B,NC,GND TTL\G#18\]
DC2	GND TTL\G#18\
DD2	GND TTL\G#18\
DE2	SBUS[N] RQ 1 L\C\
DF2	GND TTL\G#18\
DH2	SBUS[N] RQ 0 L\C\
DJ2	SBUS[N] ERROR L\C\
DK2	GND TTL\G#18\
DL2	SBUS[N] DIAG H\C\
DM2	SBUS[N] START A H\C\
DN2	GND TTL\G#18\
DP2	SBUS[N] START B H\C\
DR2	SBUS[N] DATA VALID A L\C\
DS2	SBUS[N] DATA VALID B L\C\
DT2	SBUS[N] ACKN B L\C\
DU2	SBUS[N] ACKN A L\C\
DV2	GND TTL\G#18\

"THIS DRAWING AND SPECIFICATIONS, HEREIN, ARE THE PROPERTY OF DIGITAL EQUIPMENT CORPORATION AND SHALL NOT BE REPRODUCED OR COPIED OR USED IN WHOLE OR IN PART AS THE BASIS FOR THE MANUFACTURE OR SALE OF ITEMS WITHOUT WRITTEN PERMISSION.
COPYRIGHT © 1975, DIGITAL EQUIPMENT CORPORATION"

REVISIONS		
CHK	CHANGE NO.	REV

digital

DRN. | DATE 21-OCT-75 | ENG. | DATE 21 Oct 75 | TITLE: SBUS CABLE MEMORY TO CPU
CHK. | DATE 21 Oct 75 | BOARD LOCATION: | SHEET 1 OF 1
SBUSX[4,121] | 07-SEP-75 16:04 | NEXT HIGHER ASSEMBLY: B-DD-KL10-0
FIRST USED ON OPTION/MODEL: KL10

SIZE	CODE	NUMBER	REV.
D	IC	KL10-0-SBUS	

404

"THIS DRAWING AND SPECIFICATIONS, HEREIN, ARE THE PROPERTY OF DIGITAL EQUIPMENT CORPORATION AND SHALL NOT BE REPRODUCED OR COPIED OR USED IN WHOLE OR IN PART AS THE BASIS FOR THE MANUFACTURE OR SALE OF ITEMS WITHOUT WRITTEN PERMISSION. COPYRIGHT © 1975 DIGITAL EQUIPMENT CORPORATION"

NOTES:

1. ITEMS NOT SHOWN WITH AN ASTERISK ARE PART OF DTE2Ø LOGIC ASSY E-AD-7010101-0-0

	4	5	6	7	8
H		BC11A **	BC11A **		
J		(M929)	(M929)	(M8564)	

	1	2	3	4	5	6	7	8	9	10
A	** M92Ø									BC11A **
B		M8559	SPARE	M8553 *	M8552 *	SPARE	SPARE	SPARE	SPARE	(M929)
C	** M92Ø									BC2ØC **
D										(M9006)
E	SPARE		M8554 *							BC2ØC **
F										(M9006)

REF. PIN SIDE

* DTE2Ø MODULE SET LOCATION NOT SUPPLIED AS PART OF E-AD-7010101-0-0

** NOT SUPPLIED AS PART OF E-AD-7010101-0-0 SEE D-UA-KLIØ-0-0

REVISIONS			
CHK	CHANGE NO.	REV.	
	KLIØ-00002	A	

J. PROVIDENT

FIRST USED ON OPTION/MODEL	QTY.	DESCRIPTION	PART NO.	ITEM NO.
KLIØ		PARTS LIST		

DIMENSIONAL TOLERANCE

DIMENSIONS ARE ~~MILLIMETERS~~ INCHES UNLESS OTHERWISE SPECIFIED

MILLIMETERS	INCHES	ANGLES
X.XX = ±0.10	.XXX = ±.005	±0° 30'
X.X = ±0.5	.XX = ±.02	
X = ±2,	.X = ±.1	

THIRD ANGLE PROJECTION

REMOVE BURRS AND BREAK SHARP CORNERS SURFACE QUALITY ✓

MATERIAL —//—

FINISH —//—

		DATE
DRN.	M. Gaches	2-27-75
CHK'D		3-6-75
ENG.	J. Provident	3-26-75
PROJ. ENG.	J. Provident	3-26-75
PROD.		3-26-75

NEXT HIGHER ASSY. D-UA-KLIØ-Ø-Ø

SCALE —//—

SHEET 1 OF 1

digital

TITLE MODULE UTILIZATION DTE2Ø

SIZE	CODE	NUMBER	REV.
C	MU	KLIØ-Ø-DTE1	A

DIST.

DEC FORM NO. DRC 100-B

405

"THIS DRAWING AND SPECIFICATIONS, HEREIN, ARE THE PROPERTY OF DIGITAL EQUIPMENT CORPORATION AND SHALL NOT BE REPRODUCED OR COPIED OR USED IN WHOLE OR IN PART AS THE BASIS FOR THE MANUFACTURE OR SALE OF ITEMS WITHOUT WRITTEN PERMISSION. COPYRIGHT © 1975, DIGITAL EQUIPMENT CORPORATION"

NOTES:

1. ITEM NOT SHOWN WITH AN ASTERISK ARE PART OF RH2Ø/DTE2Ø LOGIC ASSY E-AD-7010102-0-0

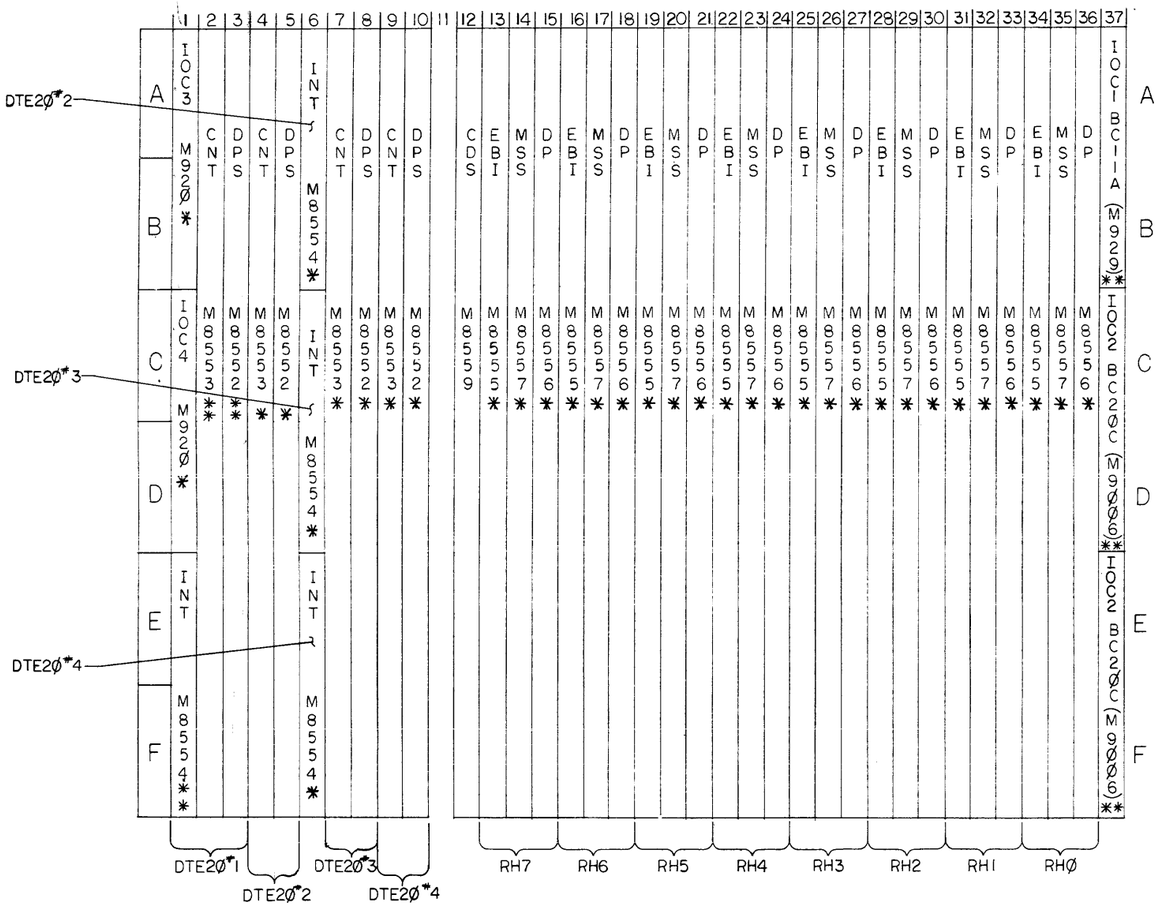

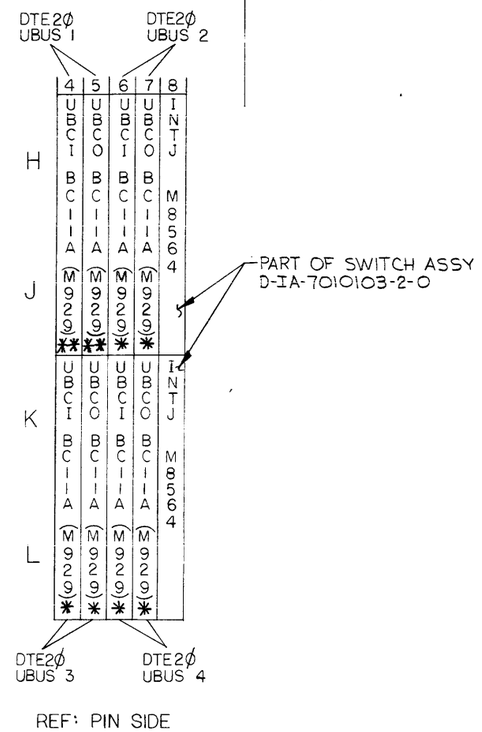

REF: PIN SIDE

REF: PIN SIDE

* INSTALLED AT SYSTEMS LEVEL

** INSTALLED AT KLIØ UNIT ASSY LEVEL D-UA-KLIØ-Ø-Ø

QUANTITY & VARIATION	DESCRIPTION	DWG./PART NO.	ITEM NO.

UNLESS OTHERWISE SPECIFIED DIMENSIONS ARE IN INCHES

ANGLES ±0° 30'	CLASS OF ACCURACY (CHECK ONE)	NOMINAL DIMENSION RANGE INCHES: OVER 0 TO 0.2	OVER 0.2 TO 1.2	OVER 1.2 TO 4.0	OVER 4.0 TO 12.0	OVER 12.0 TO 40.0	OVER 40.0 TO 80.0
SURFACE QUALITY IN ✓ MICROINCHES	MEDIUM ☐	±.004	±.008	±.012	±.016	±.024	±.04
	PREFERRED ☐	±.012	±.016	±.026	±.04	±.063	±0.1

THIRD ANGLE PROJECTION

REMOVE BURRS AND BREAK SHARP CORNERS

DO NOT SCALE DWG

MATERIAL —//—

FINISH —//—

DRN. M. Gaglia 3-11-75
CHK'D 3-25-75
ENG. 3-25-75
PROJ. ENG. 3-26-75
PROD. 3-26-75

NEXT HIGHER ASSY. E-UA-KLIØ-Ø-Ø

SCALE —//—

SHEET 1 OF 1

FIRST USED ON KLIØ digital

TITLE MODULE UTILIZATION RH2Ø-DTE2Ø

SIZE D CODE MU NUMBER KLIØ-Ø-RHDT REV.

DIST.

REVISIONS: REV. / CHANGE NO. / CHK

DEC FORM NO. DRD 100-C

406

mR

REVISION CONTROL SHEET

CUSTOMER PRINT SET	MFG SET	DRAWING NO	NO OF SHT	DESCRIPTION	OPTION NO/FILE DATE	A	B	C	D	E	F
			-	MODULE REVISION		A	B	C	D	E	F
		D-UA-M8552-Ø-Ø	5	10/11 DATA PATH		-	A	B	C	D	D1
		D-CS-M8552-Ø-DPS1	1	DATA PATH AND STATUS		-	–	A	A	B	B1
		D-CS-M8552-Ø-DPS2	1	DATA PATH AND STATUS		-	–	A	A	A	A1
		D-CS-M8552-Ø-DPS3	1	DATA PATH AND STATUS		-	–	A	A	A	A1
		D-CS-M8552-Ø-DPS4	1	DATA PATH AND STATUS		-	–	A	A	A	A1
		D-CS-M8552-Ø-DPS5	1	DATA PATH AND STATUS		-	–	A	B	C	C1
		D-CS-M8552-Ø-DPS6	1	DATA PATH AND STATUS		-	–	A	A	A	A1
		D-CS-M8552-Ø-DPS7	1	DATA PATH AND STATUS		-	–	A	B	C	C1
		D-CS-M8552-Ø-DPS8	1	DATA PATH AND STATUS, PWR, CAP + GND		-	A	B	B	C	C1
		K-CO-M8552-Ø-4	1	10/11 DATA PATH		B	B	B	B	B	B
		D-AH-M8552-Ø-5	4	10/11 DATA PATH		A	A	A	A	A	A
		B-MH-M8552-Ø-6	1	MODULE ECO HISTORY		REF	-	-	-	-	-
		5010516		ETCH CIRCUIT BOARD		B	B	B	B	B	B
		P00-M8552-ØØ		PROCESS SHEET (REF ONLY)		-	-	-	-	-	-

REVISIONS

ECO NO	ORIG.	00001	00002	00003	00004	00005
						REWORK VERSION
						RELAYOUT VERSION SEE SHEET 3

CUSTOMER PRINT SET CODES
X = PRINT OF DOCUMENT INCLUDED IN PRINT SET
C = INCLUDES ALL PRINTS INDICATED ON DOCUMENT
S = CONFIDENTIAL AUTHORIZED SIGNATURE REQUIRED

TITLE	SHEET	SIZE	CODE	NUMBER	REV
10/11 DATA PATH	SHEET 2 OF 3	B	DD	M8552-Ø	E

407

THIS DRAWING AND SPECIFICATIONS, HEREIN, ARE THE PROPERTY OF DIGITAL EQUIPMENT CORPORATION AND SHALL NOT BE REPRODUCED OR COPIED OR USED IN WHOLE OR IN PART AS THE BASIS FOR THE MANUFACTURE OR SALE OF ITEMS WITHOUT WRITTEN PERMISSION. COPYRIGHT © 1975 DIGITAL EQUIPMENT CORPORATION

REVISIONS		
CHK	CHANGE NO	REV

TITLE	SIZE	CODE	NUMBER	REV.
1Ø/11 DATA PATH	D	UA	M8552-0-0	DI
SCALE 2/1	SHEET 2 OF 5	DIST.		

408

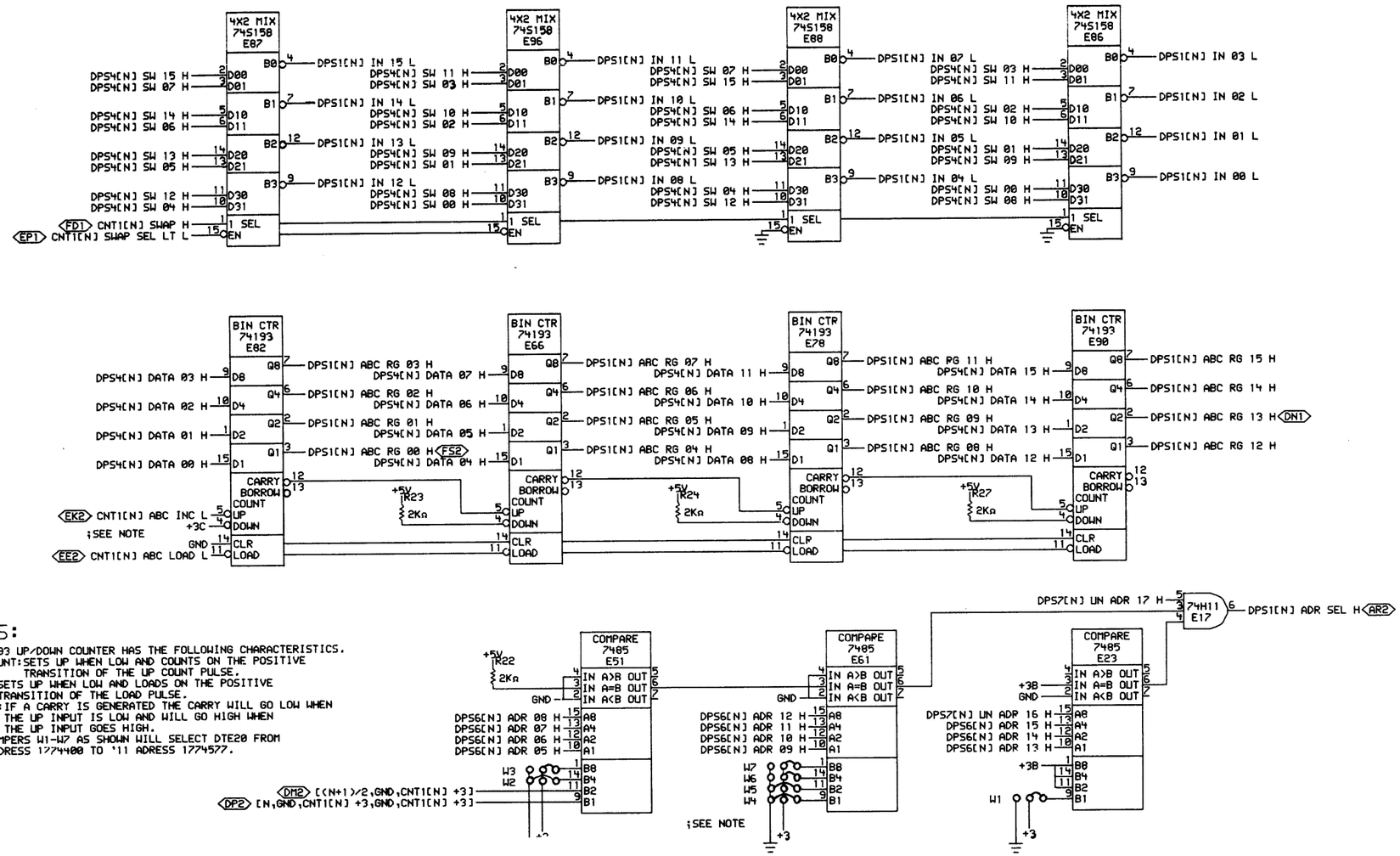

;NOTES:

;THE 74193 UP/DOWN COUNTER HAS THE FOLLOWING CHARACTERISTICS.
UP-COUNT: SETS UP WHEN LOW AND COUNTS ON THE POSITIVE TRANSITION OF THE UP COUNT PULSE.
LOAD: SETS UP WHEN LOW AND LOADS ON THE POSITIVE TRANSITION OF THE LOAD PULSE.
CARRY: IF A CARRY IS GENERATED THE CARRY WILL GO LOW WHEN THE UP INPUT IS LOW AND WILL GO HIGH WHEN THE UP INPUT GOES HIGH.
;WIRE JUMPERS W1-W7 AS SHOWN WILL SELECT DTE20 FROM '11 ADRESS 1774400 TO '11 ADRESS 1774577.

;1 OF 8

"THIS DRAWING AND SPECIFICATIONS, HEREIN, ARE THE PROPERTY OF DIGITAL EQUIPMENT CORPORATION AND SHALL NOT BE REPRODUCED OR COPIED OR USED IN WHOLE OR IN PART AS THE BASIS FOR THE MANUFACTURE OR SALE OF ITEMS WITHOUT WRITTEN PERMISSION.
COPYRIGHT © 1976, DIGITAL EQUIPMENT CORPORATION".

REVISIONS			REVISIONS		
CHK	CHANGE NO.	REV	CHK	CHANGE	REV
-	M8552-00004	B		M8552-00005	B1
	W. BRUCKERT			W. BRUCKERT	

DPS1X.DRW[4,426] 02-JUN-76 11:33
FIRST USED ON OPTION/MODEL: DTE20
DRN: L. Loosley DATE 04-JUN-76
CHK: W. Stephenson DATE 6/8/76
ENG: William Bruckert DATE 21 JUN 76
BOARD LOCATION:
SHEET 1 OF 1
NEXT HIGHER ASSEMBLY: B-DD-M8552-0

TITLE: DATA PATH AND STATUS

SIZE	CODE	NUMBER	REV.
D	CS	M8552-0-DPS1	B1

409

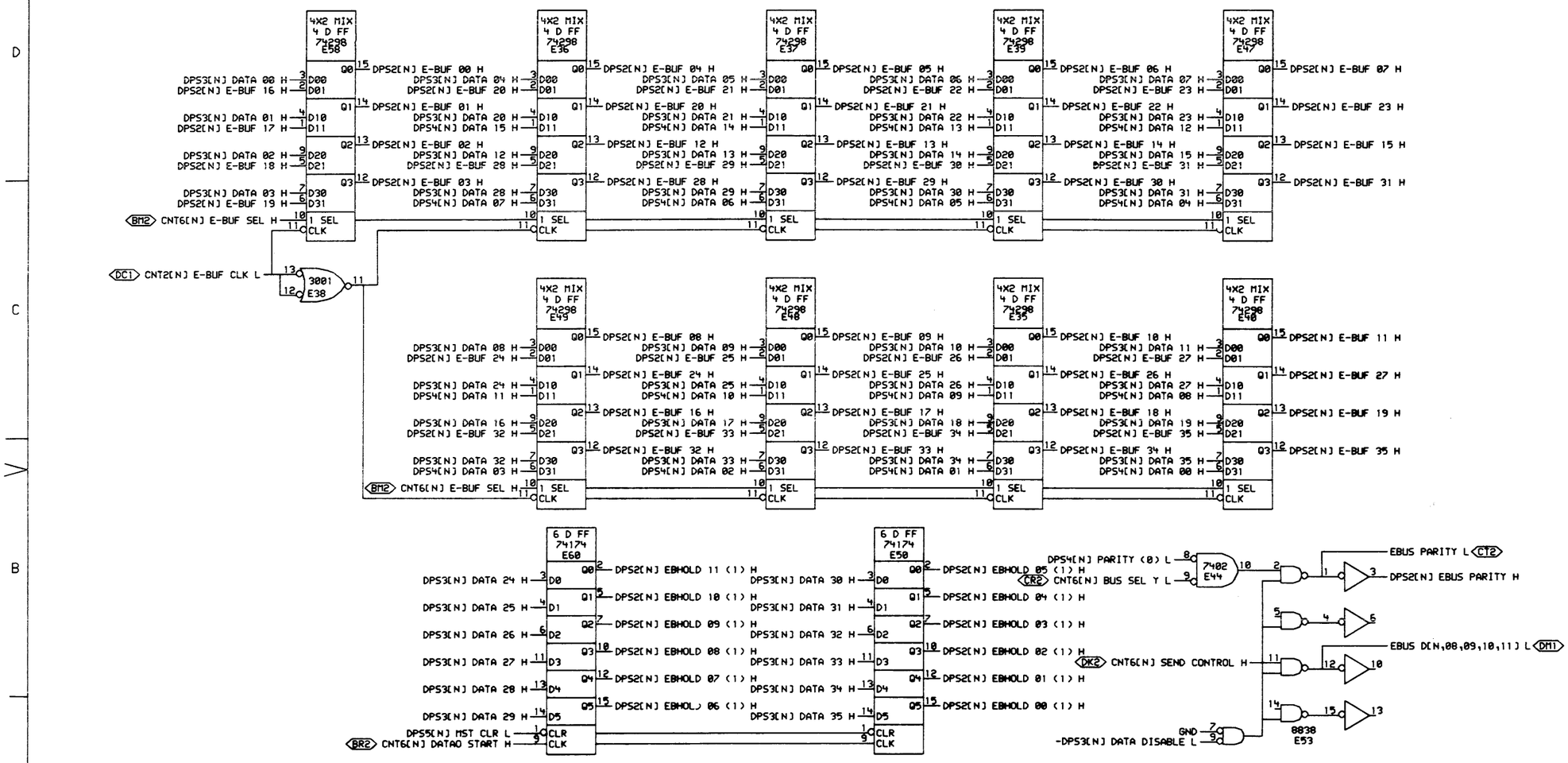

;2 OF 8

"THIS DRAWING AND SPECIFICATIONS, HEREIN, ARE THE PROPERTY OF DIGITAL EQUIPMENT CORPORATION AND SHALL NOT BE REPRODUCED OR COPIED OR USED IN WHOLE OR IN PART AS THE BASIS FOR THE MANUFACTURE OR SALE OF ITEMS WITHOUT WRITTEN PERMISSION. COPYRIGHT © 1975, DIGITAL EQUIPMENT CORPORATION"

REVISIONS			REVISIONS		
CHK	CHANGE NO.	REV	CHK	CHANGE NO	REV
	M8552-00002	A		M8552-00005	A1
	E. Wilson	7/1/75			
	W.BRUCKERT			W. BRUCKERT	

digital

DRW. | DATE 5/23/75 | ENG. | DATE 5/29/75
CHK | DATE 6/23/75 | BOARD LOCATION: | SHEET 1 OF 1

DPS2X[4,426] 21-MAY-75 09:26 | NEXT HIGHER ASSEMBLY: B-DD-M8552-0

FIRST USED ON OPTION/MODEL: DTE20

TITLE: DATA PATH AND STATUS

SIZE	CODE	NUMBER	REV.
D	CS	M8552-0-DPS2	A1

SLOT 3

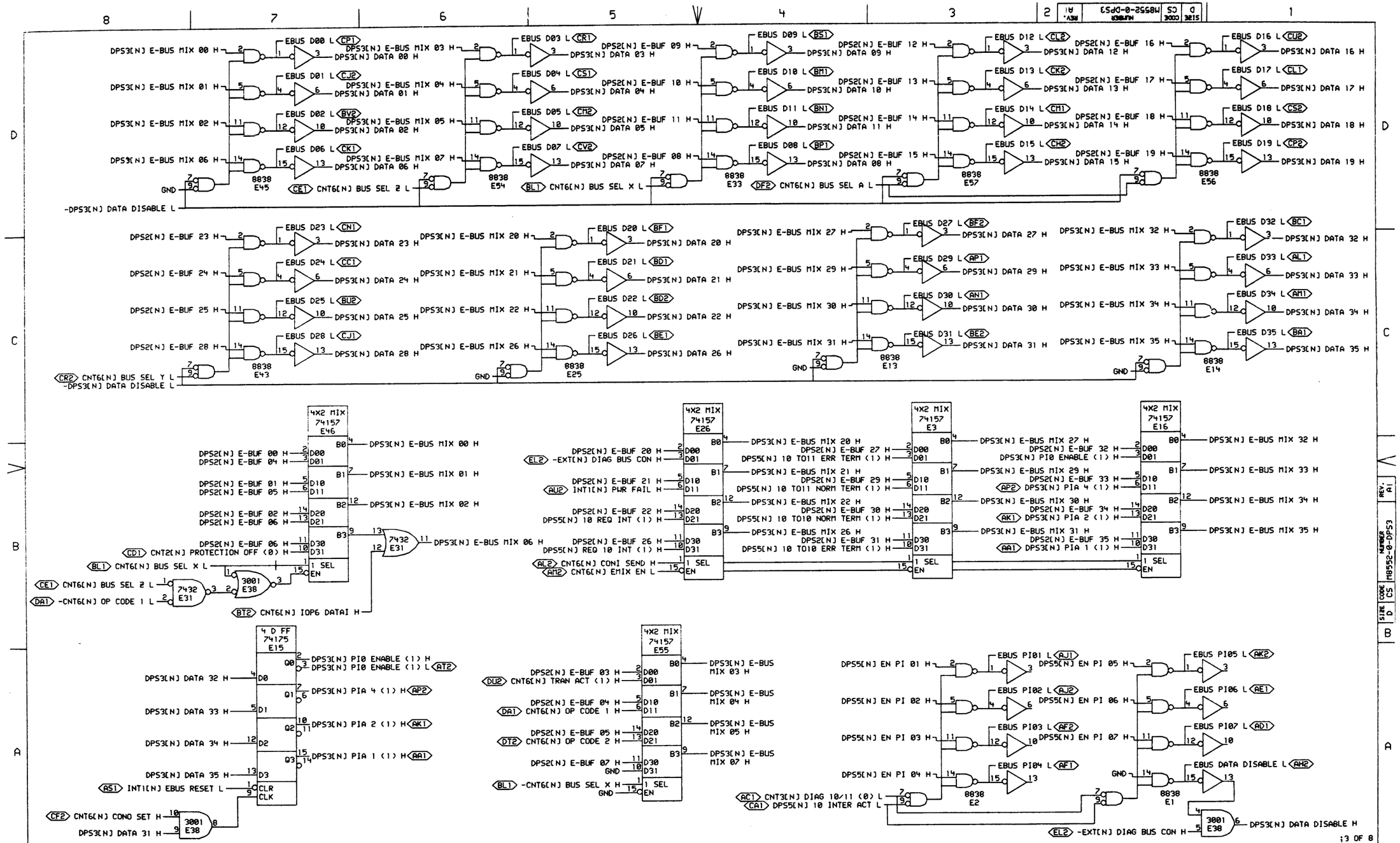

"THIS DRAWING AND SPECIFICATIONS, HEREIN, ARE THE PROPERTY OF DIGITAL EQUIPMENT CORPORATION AND SHALL NOT BE REPRODUCED OR COPIED OR USED IN WHOLE OR IN PART AS THE BASIS FOR THE MANUFACTURE OR SALE OF ITEMS WITHOUT WRITTEN PERMISSION. COPYRIGHT © 1975, DIGITAL EQUIPMENT CORPORATION"

REVISIONS			REVISIONS		
CHK	CHANGE NO.	REV	CHK	CHANGE NO	REV
	M8552-00002	A		M8552-00005	A1
	7/9/75			7/15/77	
W. BRUCKERT			W BRUCKERT		
	8-6-76			12-APR-77	

digital

DRN: W. Stephenson DATE 5/23/75
CHK: W. Stephenson DATE 5/23/75
ENG. DATE 5/29/75
DPS3X(4,426) 24-MAY-75 09:27
BOARD LOCATION:
SHEET 1 OF 1
NEXT HIGHER ASSEMBLY: B-DD-M8552-0
FIRST USED ON OPTION/MODEL: DTE20

TITLE: DATA PATH AND STATUS

SIZE	CODE	NUMBER	REV.
D	CS	M8552-0-DPS3	A1

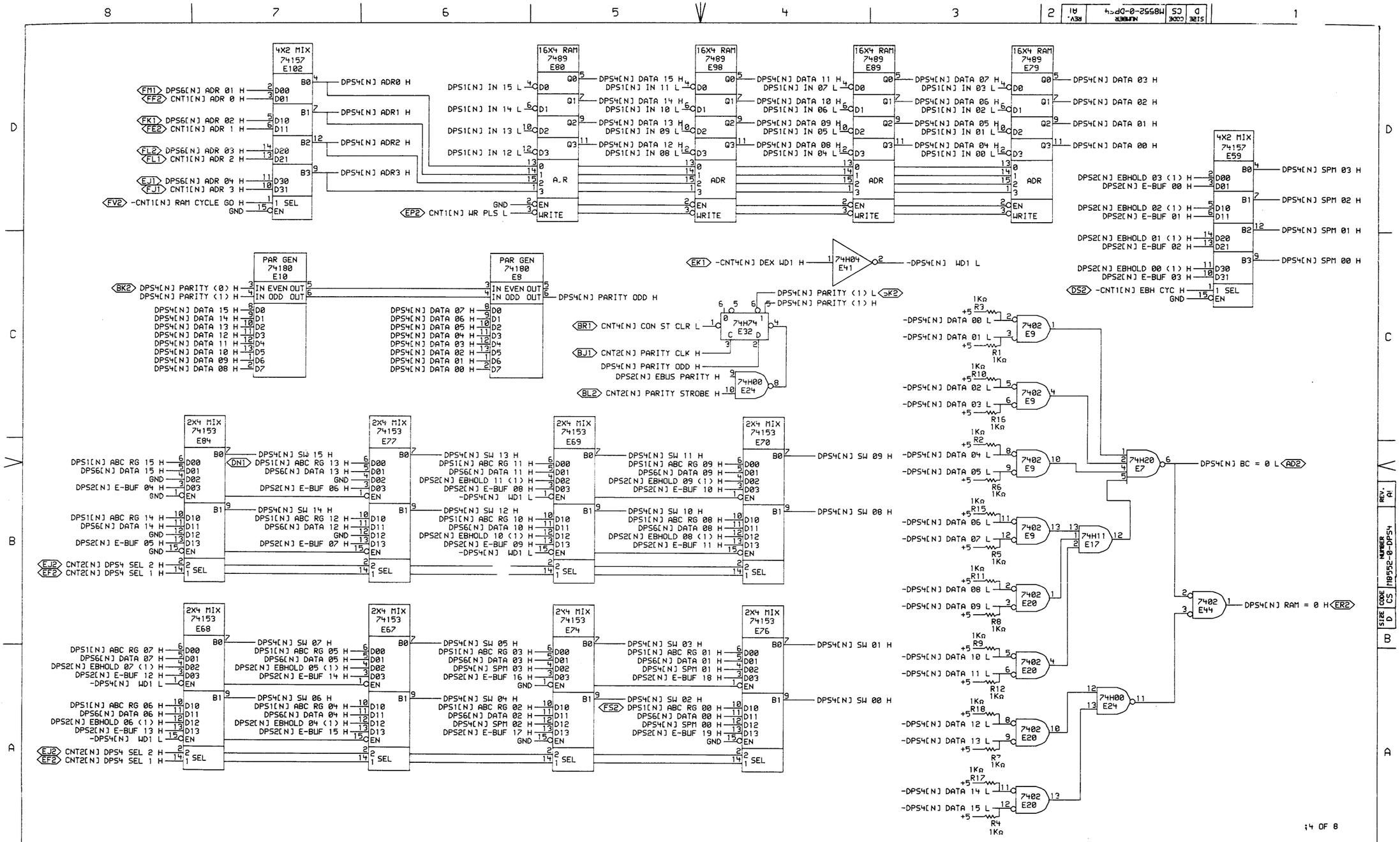

"THIS DRAWING AND SPECIFICATIONS, HEREIN, ARE THE PROPERTY OF DIGITAL EQUIPMENT CORPORATION AND SHALL NOT BE REPRODUCED OR COPIED OR USED IN WHOLE OR IN PART AS THE BASIS FOR THE MANUFACTURE OR SALE OF ITEMS WITHOUT WRITTEN PERMISSION.
COPYRIGHT © 1975, DIGITAL EQUIPMENT CORPORATION"

REVISIONS			REVISIONS		
CHK	CHANGE NO.	REV	CHK	CHANGE NO	REV
	M8552-00002	A		M8552-00005	A1
	7/8/75			9/8/77	
	J.W. BRUCKERT			W. BRUCKERT	

digital

DRN.	DATE 5/23/75	ENG.	DATE 5/29/75
CHK.	DATE 6/22/75	BOARD LOCATION:	
DPS4X(4,426)	21-MAY-75 09:29	SHEET 1 OF 1	
FIRST USED ON OPTION/MODEL: DTE20		NEXT HIGHER ASSEMBLY: B-DD-M8552-0	

TITLE: DATA PATH AND STATUS

SIZE	CODE	NUMBER	REV.
D	CS	M8552-0-DPS4	A1

412

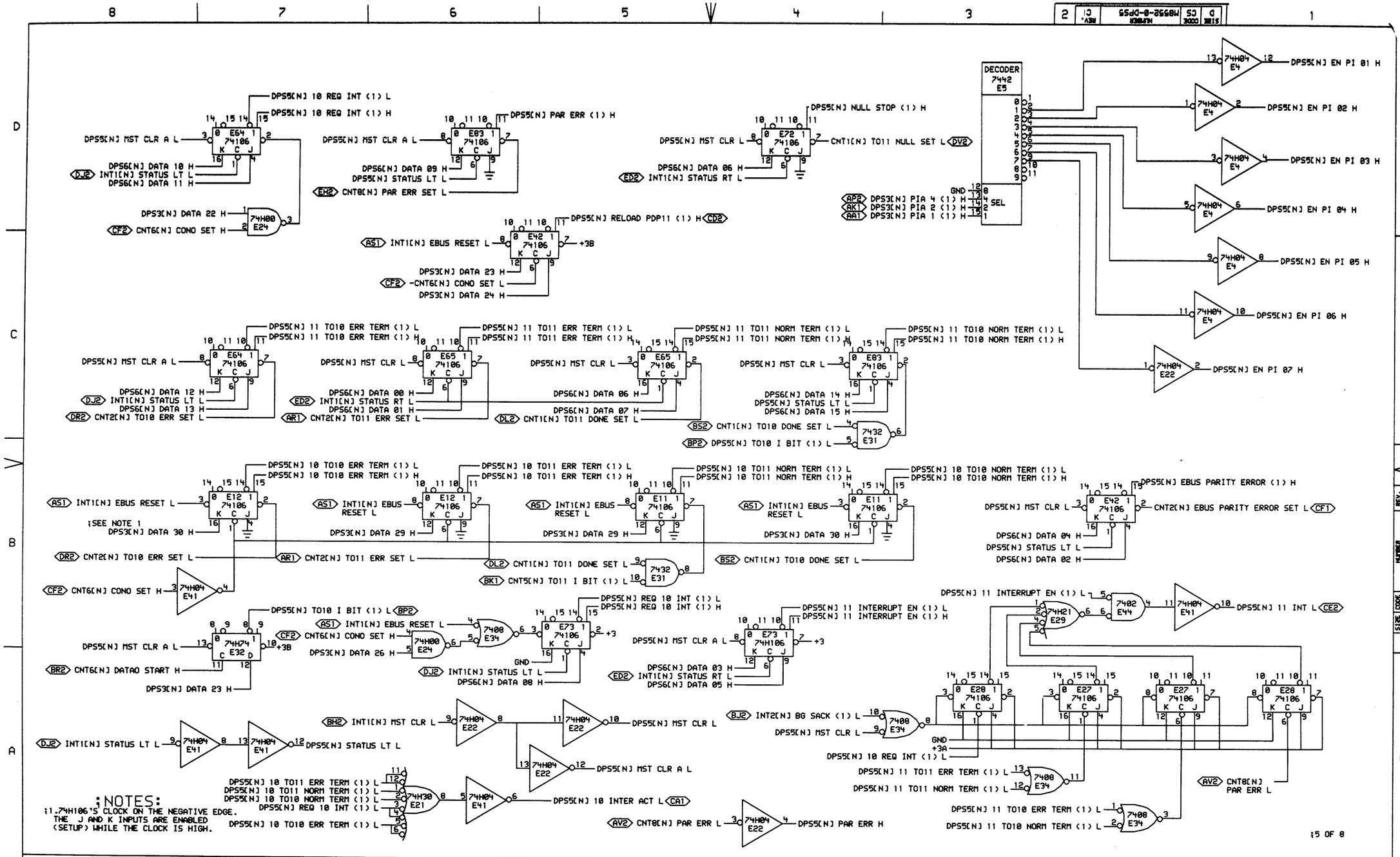

;NOTES:
;1.74H106'S CLOCK ON THE NEGATIVE EDGE.
THE J AND K INPUTS ARE ENABLED
(SETUP) WHILE THE CLOCK IS HIGH.

"THIS DRAWING AND SPECIFICATIONS, HEREIN, ARE THE PROPERTY OF DIGITAL EQUIPMENT CORPORATION AND SHALL NOT BE REPRODUCED OR COPIED OR USED IN WHOLE OR IN PART AS THE BASIS FOR THE MANUFACTURE OR SALE OF ITEMS WITHOUT WRITTEN PERMISSION. COPYRIGHT © 1976, DIGITAL EQUIPMENT CORPORATION"

REVISIONS			REVISIONS		
CHK	CHANGE NO.	REV	CHK	CHANGE NO	REV
-	M8552-00004	C		M8552-00J05	C1
	W. BRUCKERT			W. BRUCKERT	

digital

DRN.	DATE 04-JUN-76	ENG.	DATE 21 JUN 76
CHK	DATE 6/8/76	BOARD LOCATION: SHEET 1 OF 1	
DPS5X.DRW[4,426] 08-JUN-76 16:37		NEXT HIGHER ASSEMBLY:	
FIRST USED ON OPTION/MODEL: DTE20		B-DD-M8552-0	

TITLE: DATA PATH AND STATUS

SIZE	CODE	NUMBER	REV.
D	CS	M8552-0-DPS5	C1

413

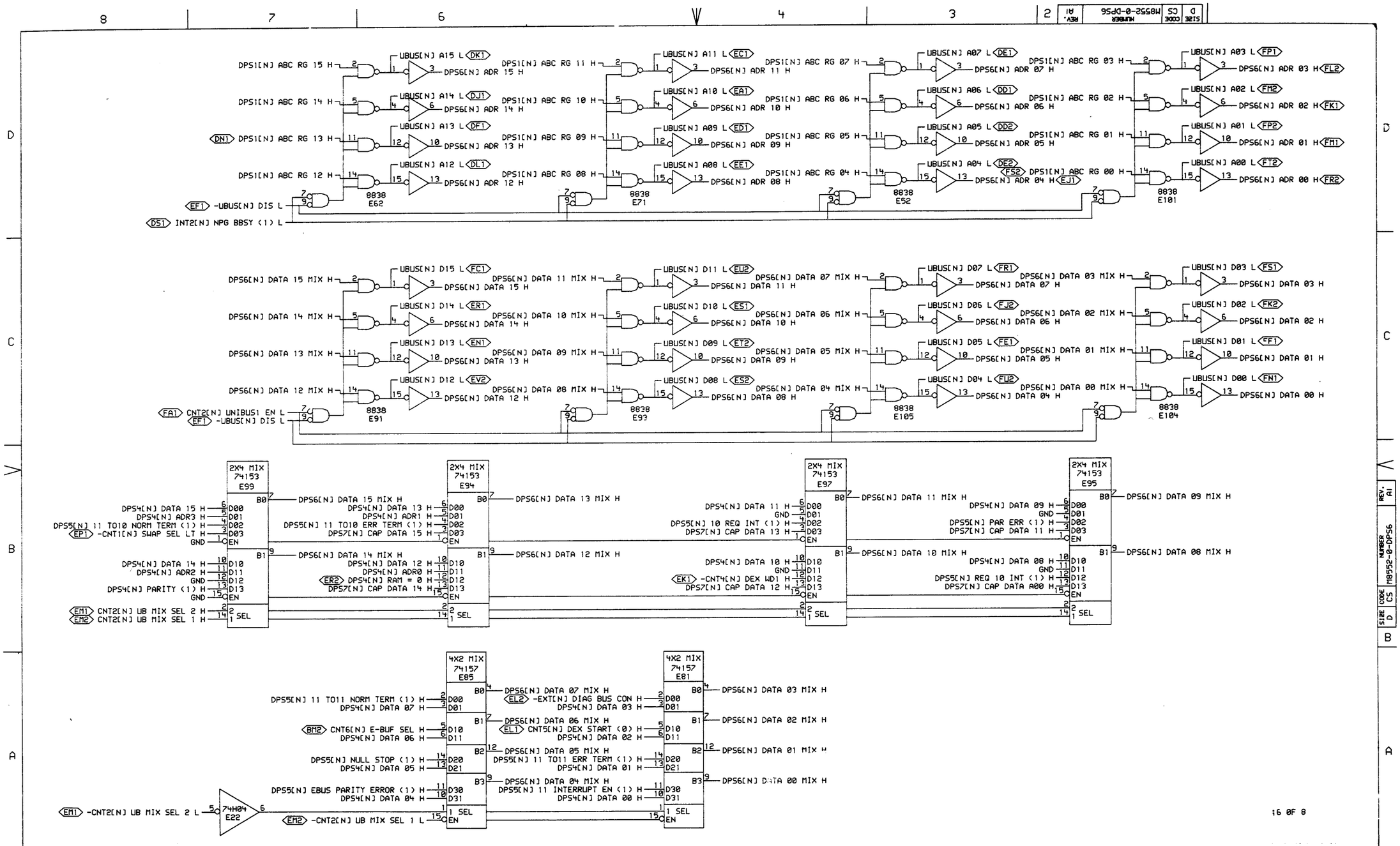

"THIS DRAWING AND SPECIFICATIONS, HEREIN, ARE THE PROPERTY OF DIGITAL EQUIPMENT CORPORATION AND SHALL NOT BE REPRODUCED OR COPIED OR USED IN WHOLE OR IN PART AS THE BASIS FOR THE MANUFACTURE OR SALE OF ITEMS WITHOUT WRITTEN PERMISSION. COPYRIGHT © 1975, DIGITAL EQUIPMENT CORPORATION"

REVISIONS			REVISIONS		
CHK	CHANGE NO.	REV	CHK	CHANGE NO	REV
	M8552-00002	A		M8552-00005	A1
	R. Wilson 7/9/75				
	W. BRUCKERT			W. BRUCKERT	

digital

DRN. W. Stephenson DATE 5/23/75 ENG. W. Bruckert DATE 5/29/75
CHK W. Stephenson DATE 5/29/75 BOARD LOCATION:
DPS6X[4,426] 24-MAY-75 09:32 SHEET 1 OF 1 NEXT HIGHER ASSEMBLY:
FIRST USED ON OPTION/MODEL: DTE20 B-DD-M8552-0

TITLE: DATA PATH AND STATUS

SIZE	CODE	NUMBER	REV.
D	CS	M8552-0-DPS6	A1

414

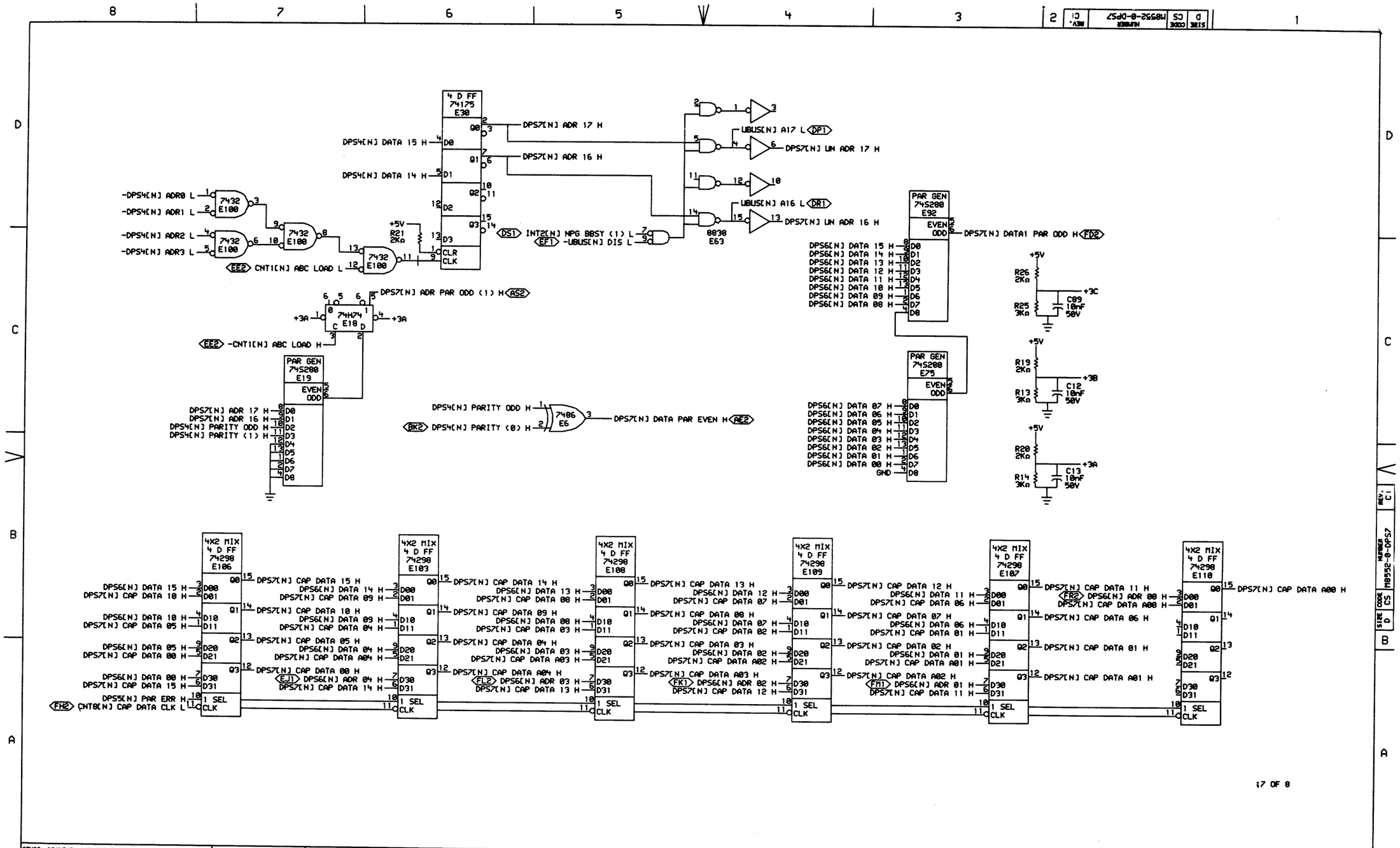

"THIS DRAWING AND SPECIFICATIONS, HEREIN, ARE THE PROPERTY OF DIGITAL EQUIPMENT CORPORATION AND SHALL NOT BE REPRODUCED OR COPIED OR USED IN WHOLE OR IN PART AS THE BASIS FOR THE MANUFACTURE OR SALE OF ITEMS WITHOUT WRITTEN PERMISSION. COPYRIGHT © 1976, DIGITAL EQUIPMENT CORPORATION"

REVISIONS		
CHK	CHANGE NO.	REV
—	M8552-00000	C

REVISIONS		
CHK	CHANGE NO	REV
	M8552-00005	C1

digital

DRW. 04-JUN-76 | ENG. DATE | DATE
CHK. DATE 6/8/76 | BOARD LOCATION: | SHEET 1 OF 1
DPS7X.DRW[4,426] 20-MAY-76 17:18 | NEXT HIGHER ASSEMBLY: B-DD-M8552-0
FIRST USED ON OPTION/MODEL: DTE20

TITLE: DATA PATH AND STATUS

SIZE	CODE	NUMBER	REV.
D	CS	M8552-0-DPS7	C1

415

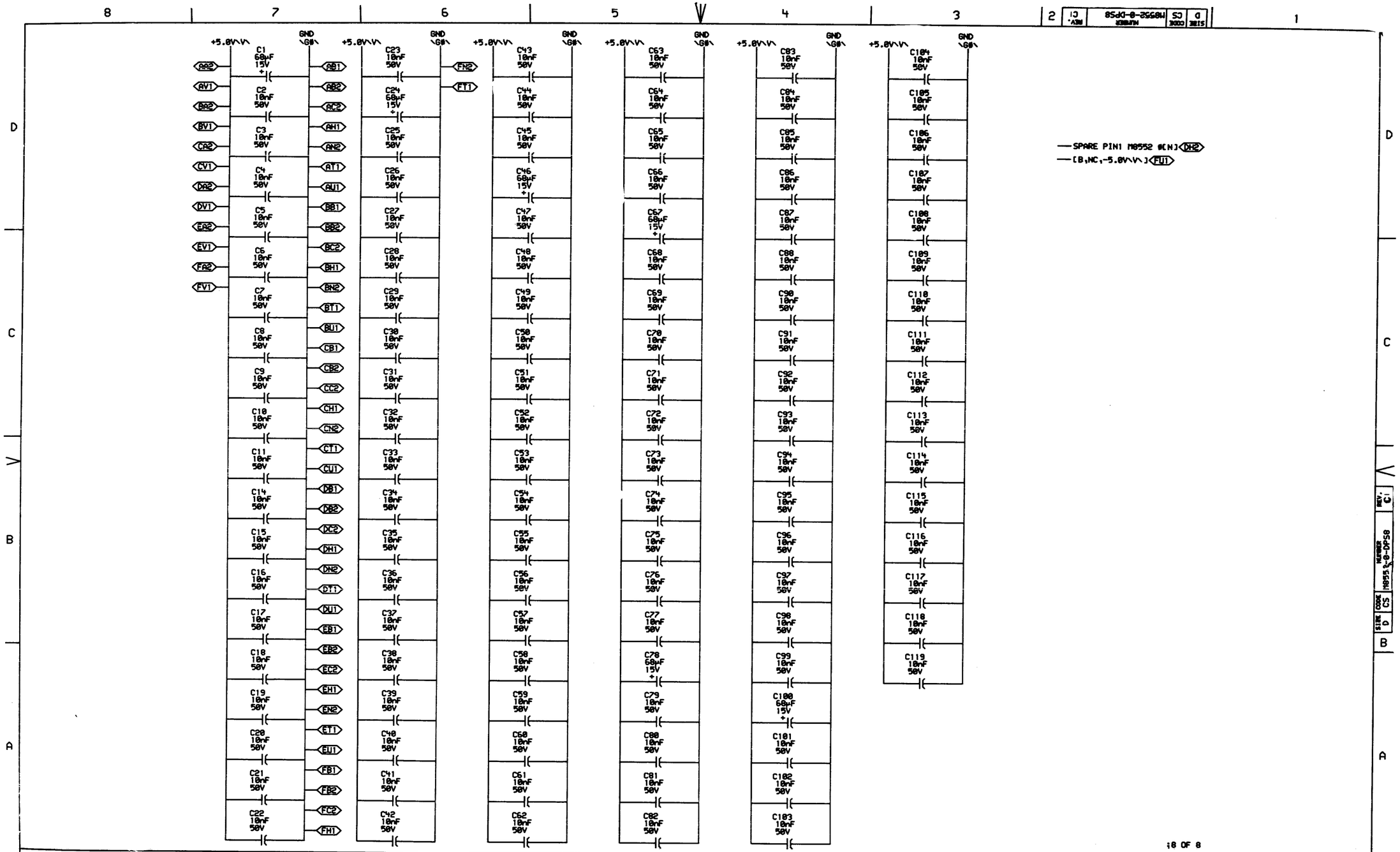

"THIS DRAWING AND SPECIFICATIONS, HEREIN, ARE THE PROPERTY OF DIGITAL EQUIPMENT CORPORATION AND SHALL NOT BE REPRODUCED OR COPIED OR USED IN WHOLE OR IN PART AS THE BASIS FOR THE MANUFACTURE OR SALE OF ITEMS WITHOUT WRITTEN PERMISSION. COPYRIGHT © 1976, DIGITAL EQUIPMENT CORPORATION"

REVISIONS					
CHK	CHANGE NO.	REV	CHK	CHANGE NO	REV
-	M8552-00004	C		M8552-00005	C1
	W. BRUCKERT			W. BRUCKERT	

digital	DRN.	DATE 01-JUN-76	ENG.	DATE 31 JUL 76	TITLE: DATA PATH & STATUS PWR, CAP & GND
	CHK'D	DATE 6/8/77	BOARD LOCATION: SHEET 1 OF 1		
DPS8EX.DRW[4,426] 03-JUN-76 14:12			NEXT HIGHER ASSEMBLY:		
FIRST USED ON OPTION/MODEL: DTE20			B-DD-M8552-0		

SIZE	CODE	NUMBER	REV.
D	CS	M8552-0-DPS8	C1

;8 OF 8

416

REVISION CONTROL SHEET

CUSTOMER PRINT SET	MFG SET	DRAWING NO	NO OF SHT	DESCRIPTION	OPTION NO/FILE DATE	REVISIONS (NEW LAYOUT VERSION)
			-	MODULE REVISION		F
		D-UA-M8552-Ø-Ø	5	10/11 DATA PATH		E
		D-CS-M8552-Ø-DPS1	1	DATA PATH AND STATUS		C
		D-CS-M8552-Ø-DPS2	1	DATA PATH AND STATUS		B
		D-CS-M8552-Ø-DPS3	1	DATA PATH AND STATUS		B
		D-CS-M8552-Ø-DPS4	1	DATA PATH AND STATUS		B
		D-CS-M8552-Ø-DPS5	1	DATA PATH AND STATUS		D
		D-CS-M8552-Ø-DPS6	1	DATA PATH AND STATUS		B
		D-CS-M8552-Ø-DPS7	1	DATA PATH AND STATUS		D
		D-CS-M8552-Ø-DPS8	1	DATA PATH AND STATUS, PWR, CAP + GND		D
		K-CO-M8552-Ø-4	1	10/11 DATA PATH		C
		D-AH-M8552-Ø-5	4	10/11 DATA PATH		B
		B-MH-M8552-Ø-6	1	MODULE ECO HISTORY		-
		5010516	-	ETCH CIRCUIT BOARD		C
		P00-M8552-ØØ		PROCESS SHEET (REF ONLY)		-

CUSTOMER PRINT SET CODES

X = PRINT OF DOCUMENT INCLUDED IN PRINT SET
C = INCLUDES ALL PRINTS INDICATED ON DOCUMENT
S = CONFIDENTIAL AUTHORIZED SIGNATURE REQUIRED

ECO NO: 00005

TITLE		SIZE	CODE	NUMBER	REV
10/11 DATA PATH	SHEET 3 OF 3	B	DD	M8552-Ø	E

417

MR

THIS DRAWING AND SPECIFICATIONS HEREIN, ARE THE PROPERTY OF DIGITAL EQUIPMENT CORPORATION, AND SHALL NOT BE REPRODUCED OR COPIED OR USED IN WHOLE OR IN PART AS THE BASIS FOR THE MANUFACTURE OR SALE OF ITEMS OF SUCH DRAWING OR DESIGN WITHOUT PERMISSION. COPYRIGHT © 1976 DIGITAL EQUIPMENT CORPORATION.

LAYER 1

M8552 5010516C-P2

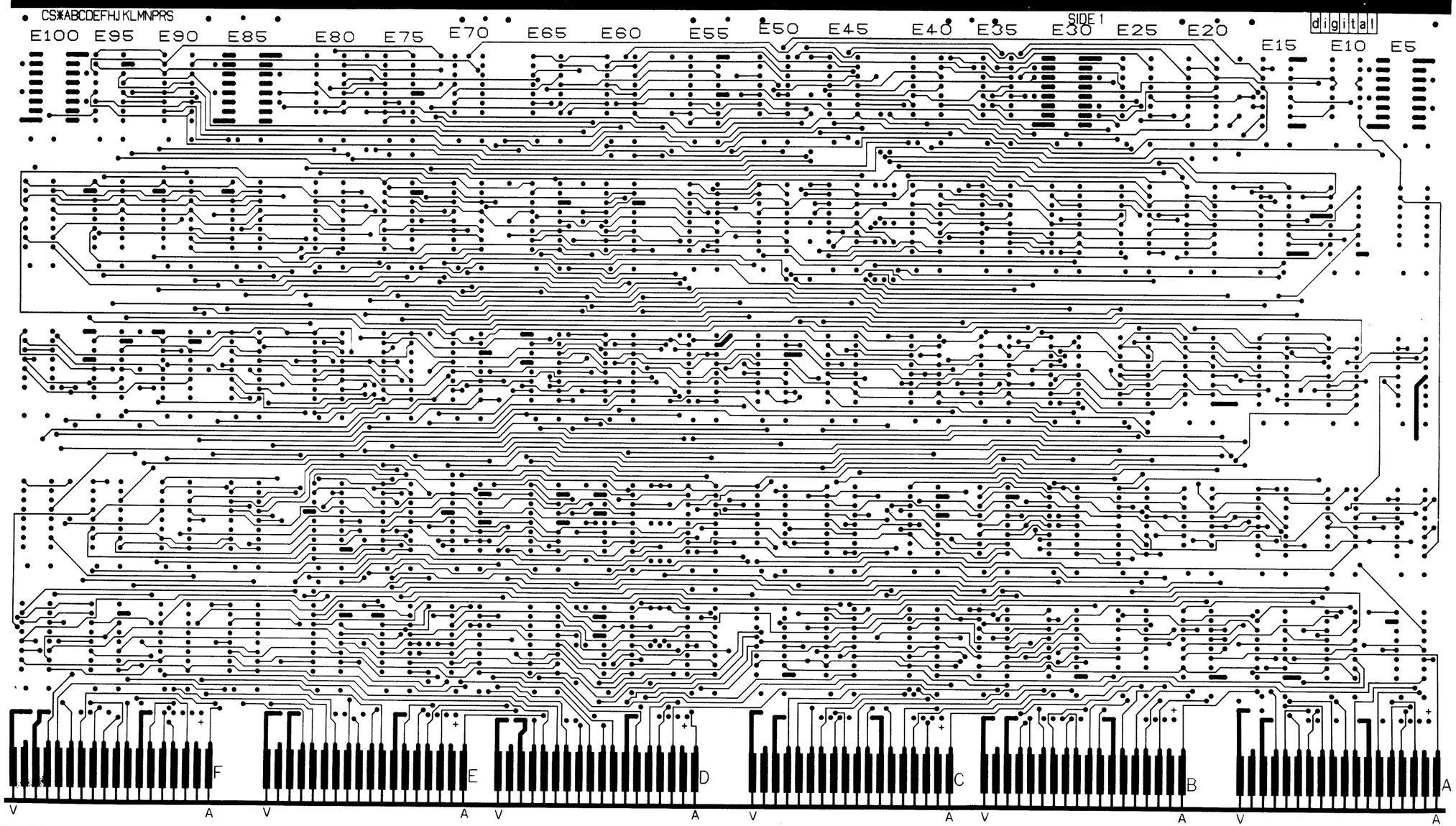

REVISIONS		
SYM	CHANGE NO	REV

TITLE	SIZE	CODE	NUMBER	REV.
10/11 DATA PATH	D	UA	M8552-Ø-Ø	E
SCALE 2/1	SHEET 3 OF 5		DIST.	

MR 1

418

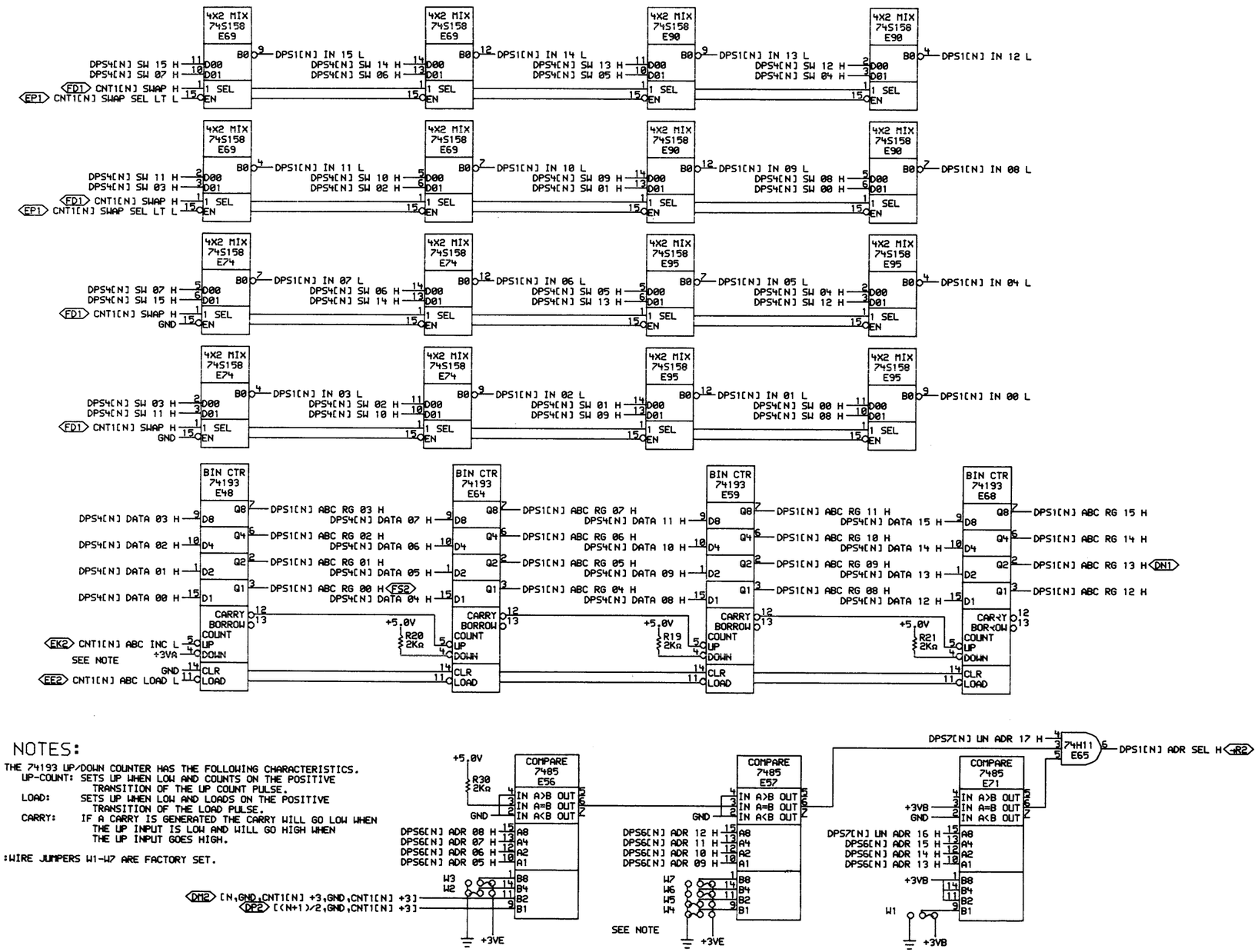

NOTES:

THE 74193 UP/DOWN COUNTER HAS THE FOLLOWING CHARACTERISTICS.

UP-COUNT: SETS UP WHEN LOW AND COUNTS ON THE POSITIVE TRANSITION OF THE UP COUNT PULSE.

LOAD: SETS UP WHEN LOW AND LOADS ON THE POSITIVE TRANSITION OF THE LOAD PULSE.

CARRY: IF A CARRY IS GENERATED THE CARRY WILL GO LOW WHEN THE UP INPUT IS LOW AND WILL GO HIGH WHEN THE UP INPUT GOES HIGH.

:WIRE JUMPERS W1-W7 ARE FACTORY SET.

DTE SLOT LOCATIONS

TYPE	N=	SLOT
SINGLE	1	2AF0
MULTIPLE	1	2AF03
	2	2AF05
	3	2AF08
	4	2AF10

1 OF 8

"THIS DRAWING AND SPECIFICATIONS, HEREIN, ARE THE PROPERTY OF DIGITAL EQUIPMENT CORPORATION AND SHALL NOT BE REPRODUCED OR COPIED OR USED IN WHOLE OR IN PART AS THE BASIS FOR THE MANUFACTURE OR SALE OF ITEMS WITHOUT WRITTEN PERMISSION. COPYRIGHT © 1977, DIGITAL EQUIPMENT CORPORATION"

REVISIONS		
CHK	CHANGE NO.	REV

DRN. J. Cooley DATE 18-FEB-77 ENG. G. Bruchert DATE 23-FEB-77
CHK'D J. Stephenson DATE 2/11/77 BOARD LOCATION: SHEET 1 OF 1
DPS1R5.DRUC[4,613] 09-FEB-77 12:08 NEXT HIGHER ASSEMBLY:
FIRST USED ON OPTION/MODEL: DTE20 B-DD-M8552-0

TITLE: DATA PATH AND STATUS

SIZE	CODE	NUMBER	REV.
D	CS	M8552-0-DPS1	C

419

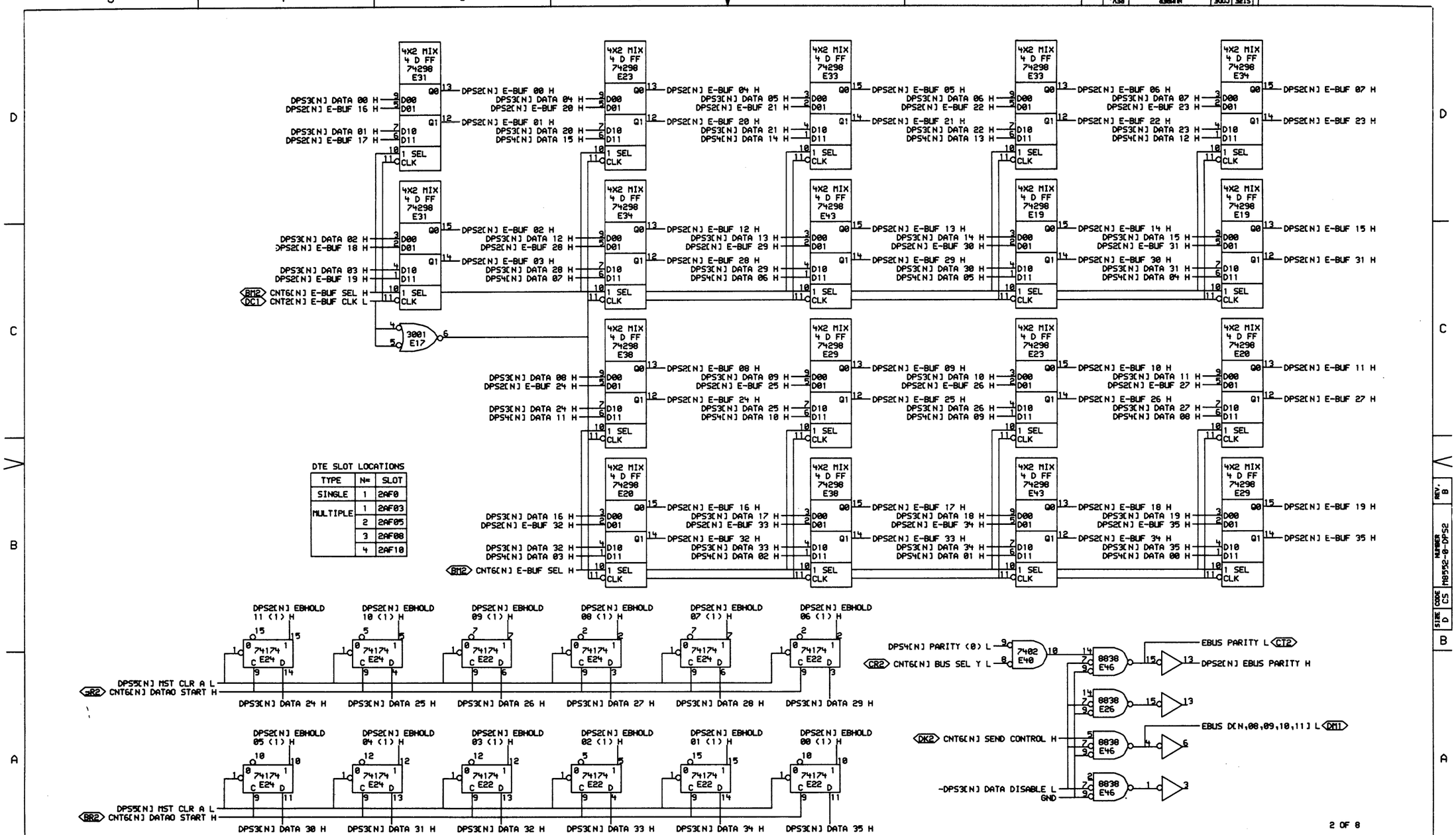

DTE SLOT LOCATIONS

TYPE	N=	SLOT
SINGLE	1	2AF0
MULTIPLE	1	2AF03
	2	2AF05
	3	2AF08
	4	2AF10

"THIS DRAWING AND SPECIFICATIONS, HEREIN, ARE THE PROPERTY OF DIGITAL EQUIPMENT CORPORATION AND SHALL NOT BE REPRODUCED OR COPIED OR USED IN WHOLE OR IN PART AS THE BASIS FOR THE MANUFACTURE OR SALE OF ITEMS WITHOUT WRITTEN PERMISSION. COPYRIGHT © 1977, DIGITAL EQUIPMENT CORPORATION"

REVISIONS		
CHK	CHANGE NO.	REV

M8552-00008 B
W. BRUCKERT

digital

DRW. | CHK'D | DATE 10-FEB-77 | ENG. W. Bruckert | DATE 23FEB77
BOARD LOCATION: | SHEET OF
DPS2RS.DRW[4,613] 09-FEB-77 12:58 | NEXT HIGHER ASSEMBLY:
FIRST USED ON OPTION/MODEL: DTE20 | B-DD-M8552-0

TITLE: DATA PATH AND STATUS

SIZE	CODE	NUMBER	REV.
D	CS	M8552-0-DPS2	B

420

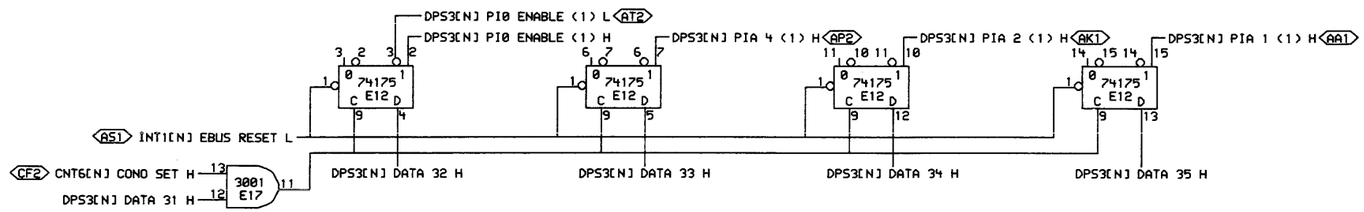

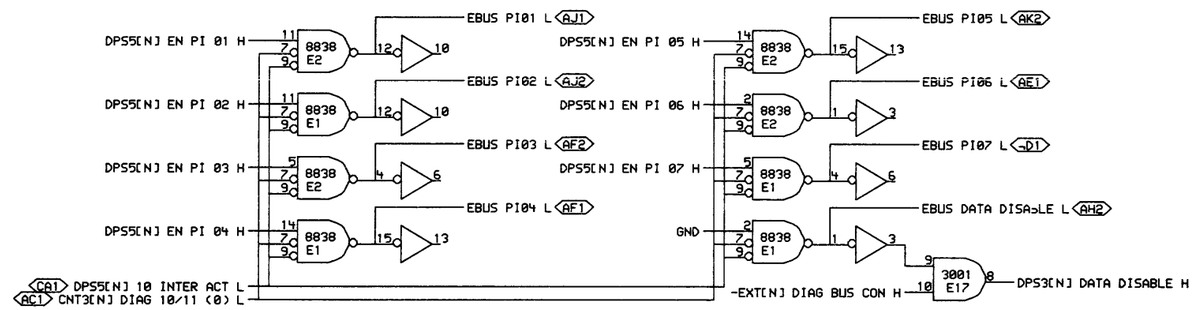

DTE SLOT LOCATIONS

TYPE	N=	SLOT
SINGLE	1	2AF0
MULTIPLE	1	2AF03
	2	2AF05
	3	2AF08
	4	2AF10

3A OF 8

"THIS DRAWING AND SPECIFICATIONS, HEREIN, ARE THE PROPERTY OF DIGITAL EQUIPMENT CORPORATION AND SHALL NOT BE REPRODUCED OR COPIED OR USED IN WHOLE OR IN PART AS THE BASIS FOR THE MANUFACTURE OR SALE OF ITEMS WITHOUT WRITTEN PERMISSION. COPYRIGHT © 1977, DIGITAL EQUIPMENT CORPORATION"

REVISIONS		
CHK	CHANGE NO.	REV

M8552-00005 B
W. BRUCKERT

DRW. S. Loomis 11-FEB-77
CHK'D Wilsphuss 6/11/77
ENG. W. Bruckert 23FEB77
DATE
BOARD LOCATION:
SHEET 1 OF 2
DPS3A?.DRW[4,613] 09-FEB-77 12:59
NEXT HIGHER ASSEMBLY: B-DD-M8552-0
FIRST USED ON OPTION/MODEL: DTE20

TITLE: DATA PATH AND STATUS

SIZE	CODE	NUMBER	REV.
D	CS	M8552-0-DPS3	B

421

MR

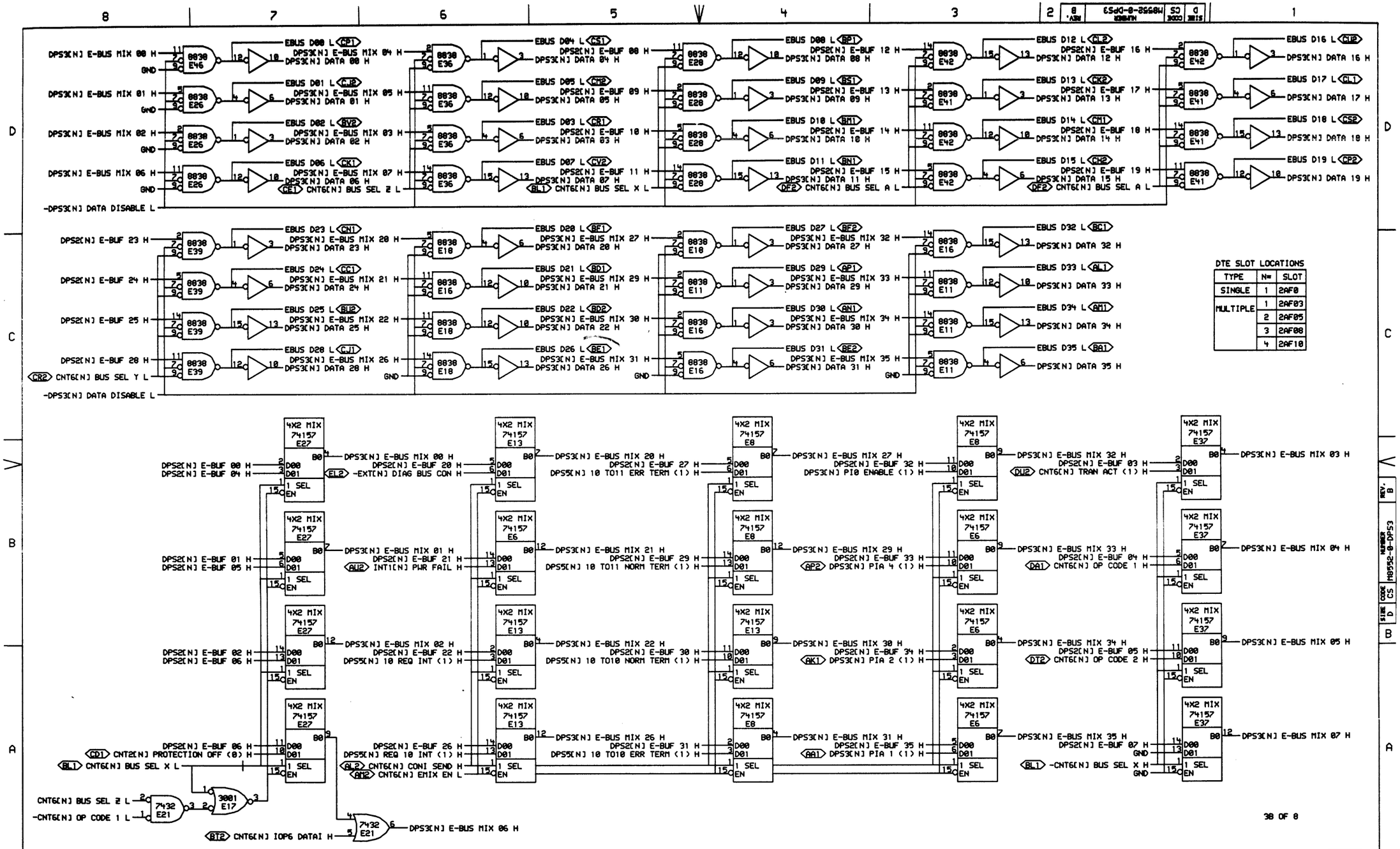

DTE SLOT LOCATIONS

TYPE	N=	SLOT
SINGLE	1	2AF0
MULTIPLE	1	2AF03
	2	2AF05
	3	2AF08
	4	2AF10

"THIS DRAWING AND SPECIFICATIONS, HEREIN, ARE THE PROPERTY OF DIGITAL EQUIPMENT CORPORATION AND SHALL NOT BE REPRODUCED OR COPIED OR USED IN WHOLE OR IN PART AS THE BASIS FOR THE MANUFACTURE OR SALE OF ITEMS WITHOUT WRITTEN PERMISSION. COPYRIGHT © 1977, DIGITAL EQUIPMENT CORPORATION"

REVISIONS		
CHK	CHANGE NO.	REV

M8552-00005 B
W. BRUCKERT

DRW. 10-FEB-77 | ENG. 23FEB77 | DATE

DPS3RS.DRW[4,613] 09-FEB-77 13:02

FIRST USED ON OPTION/MODEL: DTE20

BOARD LOCATION: SHEET 2 OF 2

NEXT HIGHER ASSEMBLY: B-DD-M8552-0

TITLE: DATA PATH AND STATUS

SIZE	CODE	NUMBER	REV.
D	CS	M8552-0-DPS3	B

422

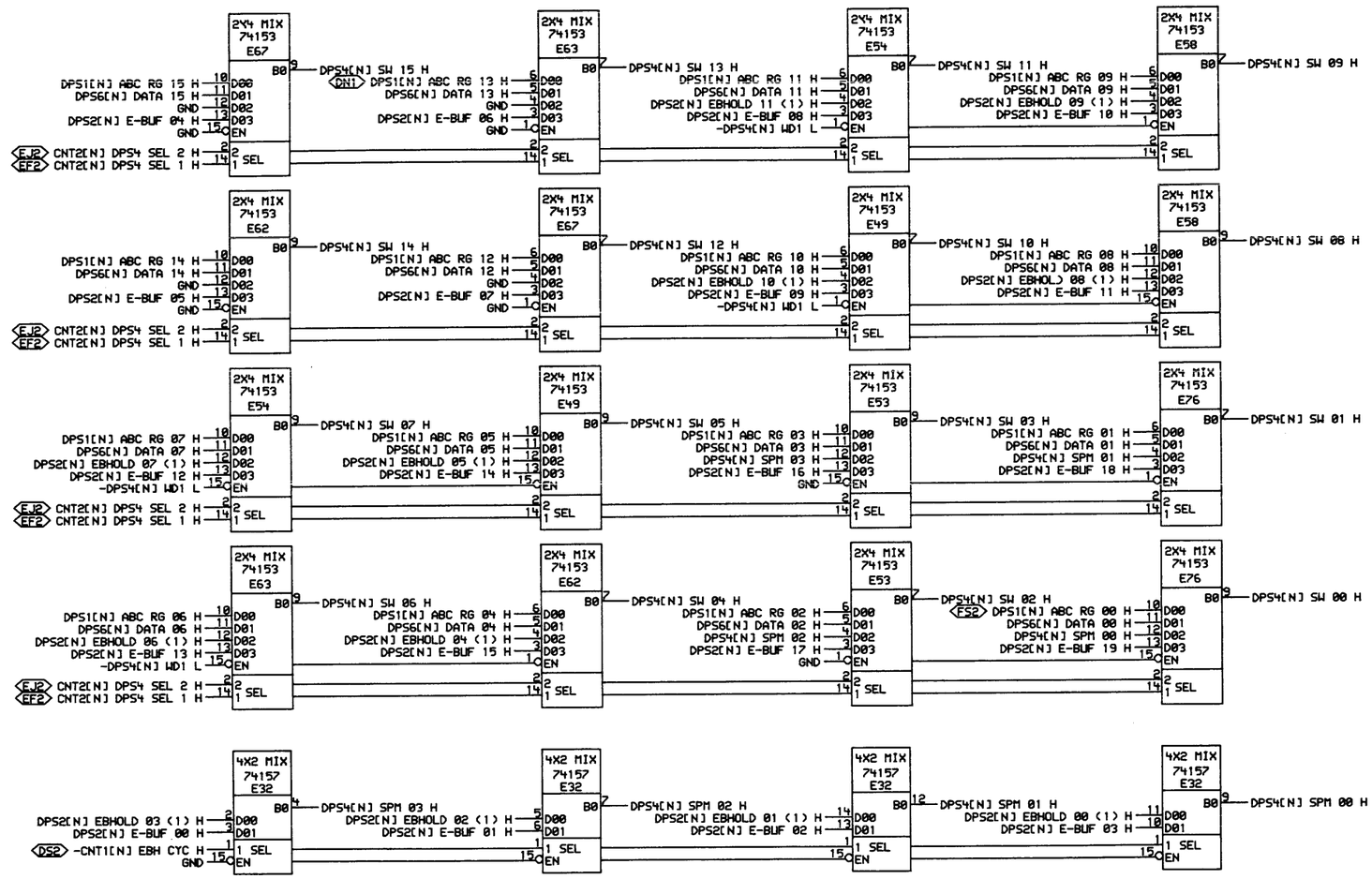

DTE SLOT LOCATIONS

TYPE	N=	SLOT
SINGLE	1	2AF0
MULTIPLE	1	2AF03
	2	2AF05
	3	2AF08
	4	2AF10

4A OF 8

"THIS DRAWING AND SPECIFICATIONS, HEREIN, ARE THE PROPERTY OF DIGITAL EQUIPMENT CORPORATION AND SHALL NOT BE REPRODUCED OR COPIED OR USED IN WHOLE OR IN PART AS THE BASIS FOR THE MANUFACTURE OR SALE OF ITEMS WITHOUT WRITTEN PERMISSION. COPYRIGHT © 1977, DIGITAL EQUIPMENT CORPORATION"

REVISIONS		
CHK	CHANGE NO.	REV

M8552-00005 B
4/4/77
W. BRUCKERT

DRN. 11-FEB-77
CHK'D 2/11/77
ENG. 23FEB77
BOARD LOCATION:
SHEET 1 OF 2
DPS4AR.DRW[4,613] 09-FEB-77 13:03
NEXT HIGHER ASSEMBLY: B-DD-M8552-0
FIRST USED ON OPTION/MODEL: DTE20

TITLE: DATA PATH AND STATUS

SIZE	CODE	NUMBER	REV.
D	CS	M8552-0-DPS4	B

423

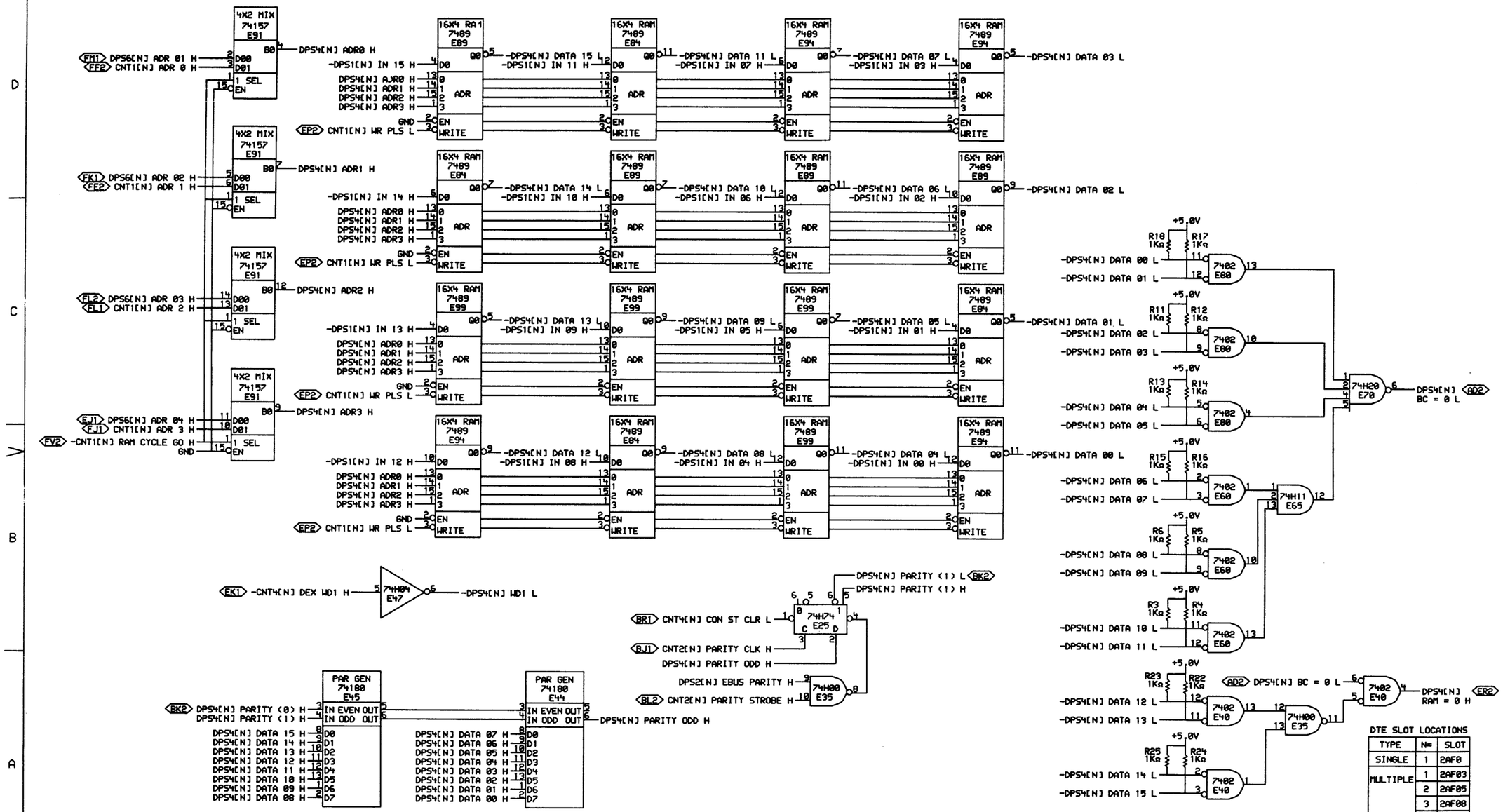

DTE SLOT LOCATIONS

TYPE	N=	SLOT
SINGLE	1	2AF0
MULTIPLE	1	2AF03
	2	2AF05
	3	2AF08
	4	2AF10

4B OF 8

"THIS DRAWING AND SPECIFICATIONS, HEREIN, ARE THE PROPERTY OF DIGITAL EQUIPMENT CORPORATION AND SHALL NOT BE REPRODUCED OR COPIED OR USED IN WHOLE OR IN PART AS THE BASIS FOR THE MANUFACTURE OR SALE OF ITEMS WITHOUT WRITTEN PERMISSION.
COPYRIGHT © 1977, DIGITAL EQUIPMENT CORPORATION"

REVISIONS		
CHK	CHANGE NO.	REV

M8552-00005 B
4/1/77
W. BRUCKERT
12-AR-77

digital

DRW. 11-FEB-77 | ENG. 23 FEB 77 | CHK. 2/11/77 | BOARD LOCATION: SHEET 2 OF 2
DPS4RS.DRW[4,613] 09-FEB-77 13:03 | NEXT HIGHER ASSEMBLY: B-DD-M8552-0
FIRST USED ON OPTION/MODEL: DTE20

TITLE: DATA PATH AND STATUS

SIZE	CODE	NUMBER	REV.
D	CS	M8552-0-DPS4	B

424

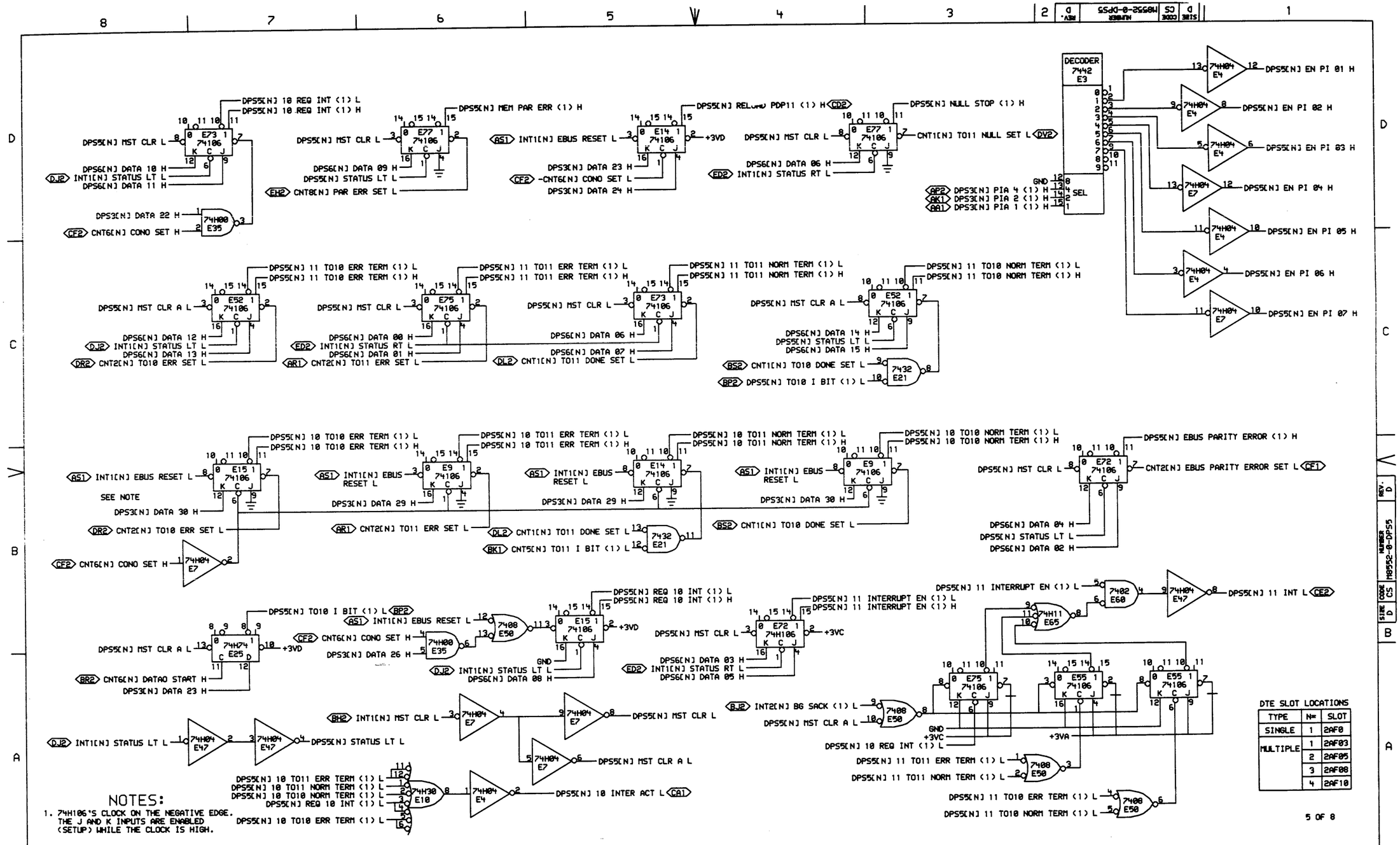
DPS5[N] 10 REQ INT (1) L
DPS5[N] 10 REQ INT (1) H
DPS5[N] MST CLR L
DPS6[N] DATA 10 H
DJ2 INT1[N] STATUS LT L
DPS6[N] DATA 11 H
DPS3[N] DATA 22 H
CF2 CNT6[N] CONO SET H
E73 74106
E35 74H00
DPS5[N] MEM PAR ERR (1) H
DPS5[N] MST CLR L
DPS6[N] DATA 09 H
DPS5[N] STATUS LT L
EH2 CNT8[N] PAR ERR SET L
E77 74106
AS1 INT1[N] EBUS RESET L
+3VD
DPS3[N] DATA 23 H
CF2 -CNT6[N] CONO SET L
DPS3[N] DATA 24 H
E14 74106
DPS5[N] RELOAD PDP11 (1) H CD2
DPS5[N] NULL STOP (1) H
DPS5[N] MST CLR L
CNT1[N] TO11 NULL SET L DV2
DPS6[N] DATA 06 H
ED2 INT1[N] STATUS RT L
DECODER 7442 E3
GND
SEL
AP2 DPS3[N] PIA 4 (1) H
AK1 DPS3[N] PIA 2 (1) H
AA1 DPS3[N] PIA 1 (1) H
74H04 E4
DPS5[N] EN PI 01 H
DPS5[N] EN PI 02 H
DPS5[N] EN PI 03 H
74H04 E7
DPS5[N] EN PI 04 H
DPS5[N] EN PI 05 H
DPS5[N] EN PI 06 H
DPS5[N] EN PI 07 H
DPS5[N] 11 TO10 ERR TERM (1) L
DPS5[N] 11 TO10 ERR TERM (1) H
DPS5[N] MST CLR A L
DPS6[N] DATA 12 H
DJ2 INT1[N] STATUS LT L
DPS6[N] DATA 13 H
DR2 CNT2[N] TO10 ERR SET L
E52 74106
DPS5[N] 11 TO11 ERR TERM (1) L
DPS5[N] 11 TO11 ERR TERM (1) H
DPS5[N] MST CLR L
DPS6[N] DATA 00 H
ED2 INT1[N] STATUS RT L
DPS6[N] DATA 01 H
AR1 CNT2[N] TO11 ERR SET L
E75 74106
DPS5[N] 11 TO11 NORM TERM (1) L
DPS5[N] 11 TO11 NORM TERM (1) H
DPS5[N] MST CLR L
DPS6[N] DATA 06 H
DPS6[N] DATA 07 H
DL2 CNT1[N] TO11 DONE SET L
E73 74106
DPS5[N] 11 TO10 NORM TERM (1) L
DPS5[N] 11 TO10 NORM TERM (1) H
DPS5[N] MST CLR A L
DPS6[N] DATA 14 H
DPS5[N] STATUS LT L
DPS6[N] DATA 15 H
BS2 CNT1[N] TO10 DONE SET L
BP2 DPS5[N] TO10 I BIT (1) L
7432 E21
DPS5[N] 10 TO10 ERR TERM (1) L
DPS5[N] 10 TO10 ERR TERM (1) H
AS1 INT1[N] EBUS RESET L
SEE NOTE
DPS3[N] DATA 30 H
DR2 CNT2[N] TO10 ERR SET L
CF2 CNT6[N] CONO SET H
E15 74106
74H04 E7
DPS5[N] 10 TO11 ERR TERM (1) L
DPS5[N] 10 TO11 ERR TERM (1) H
AS1 INT1[N] EBUS RESET L
DPS3[N] DATA 29 H
AR1 CNT2[N] TO11 ERR SET L
E9 74106
DPS5[N] 10 TO11 NORM TERM (1) L
DPS5[N] 10 TO11 NORM TERM (1) H
AS1 INT1[N] EBUS RESET L
DPS3[N] DATA 29 H
DL2 CNT1[N] TO11 DONE SET L
BK1 CNT5[N] TO11 I BIT (1) L
7432 E21
DPS5[N] 10 TO10 NORM TERM (1) L
DPS5[N] 10 TO10 NORM TERM (1) H
AS1 INT1[N] EBUS RESET L
DPS3[N] DATA 30 H
BS2 CNT1[N] TO10 DONE SET L
E14 74106
DPS5[N] EBUS PARITY ERROR (1) H
DPS5[N] MST CLR L
CNT2[N] EBUS PARITY ERROR SET L CF1
DPS6[N] DATA 04 H
DPS5[N] STATUS LT L
DPS6[N] DATA 02 H
E72 74106
DPS5[N] TO10 I BIT (1) L BP2
DPS5[N] MST CLR A L
+3VD
BR2 CNT6[N] DATAO START H
DPS3[N] DATA 23 H
E25 74H74
AS1 INT1[N] EBUS RESET L
CF2 CNT6[N] CONO SET H
DPS3[N] DATA 26 H
DJ2 INT1[N] STATUS LT L
DPS6[N] DATA 08 H
E35 74H00
7408 E50
DPS5[N] REQ 10 INT (1) L
DPS5[N] REQ 10 INT (1) H
E15 74106
+3VD
GND
DPS5[N] 11 INTERRUPT EN (1) L
DPS5[N] 11 INTERRUPT EN (1) H
DPS5[N] MST CLR L
+3VC
DPS6[N] DATA 03 H
ED2 INT1[N] STATUS RT L
DPS6[N] DATA 05 H
E72 74H106
DPS5[N] 11 INTERRUPT EN (1) L
7402 E60
74H04 E47
DPS5[N] 11 INT L CE2
74H11 E65
BH2 INT1[N] MST CLR L
DPS5[N] MST CLR L
DJ2 INT1[N] STATUS LT L
DPS5[N] STATUS LT L
DPS5[N] MST CLR A L
DPS5[N] 10 INTER ACT L CA1
DPS5[N] 10 TO11 ERR TERM (1) L
DPS5[N] 10 TO11 NORM TERM (1) L
DPS5[N] 10 TO10 NORM TERM (1) L
DPS5[N] REQ 10 INT (1) L
DPS5[N] 10 TO10 ERR TERM (1) L
74H30 E10
BJ2 INT2[N] BG SACK (1) L
DPS5[N] MST CLR A L
GND
+3VC
DPS5[N] 10 REQ INT (1) L
+3VA
DPS5[N] 11 TO11 ERR TERM (1) L
DPS5[N] 11 TO11 NORM TERM (1) L
DPS5[N] 11 TO10 ERR TERM (1) L
DPS5[N] 11 TO10 NORM TERM (1) L
E75 74106
E55 74106
NOTES:
1. 74H106'S CLOCK ON THE NEGATIVE EDGE. THE J AND K INPUTS ARE ENABLED (SETUP) WHILE THE CLOCK IS HIGH.
DTE SLOT LOCATIONS
TYPE | N= | SLOT
SINGLE | 1 | 2AF0
MULTIPLE | 1 | 2AF03
2 | 2AF05
3 | 2AF08
4 | 2AF10
5 OF 8
"THIS DRAWING AND SPECIFICATIONS, HEREIN, ARE THE PROPERTY OF DIGITAL EQUIPMENT CORPORATION AND SHALL NOT BE REPRODUCED OR COPIED OR USED IN WHOLE OR IN PART AS THE BASIS FOR THE MANUFACTURE OR SALE OF ITEMS WITHOUT WRITTEN PERMISSION. COPYRIGHT © 1977, DIGITAL EQUIPMENT CORPORATION"
REVISIONS
CHK CHANGE NO. REV
M8552-00005 D
W. BRUCKERT
digital
DPS5RS.DRW(4.613) 09-FEB-77 13:04
FIRST USED ON OPTION/MODEL: DTE20
DATE 10-FEB-77
ENG. N. Bruckert
DATE 23-FEB-77
BOARD LOCATION:
SHEET 1 OF 1
NEXT HIGHER ASSEMBLY: B-DD-M8552-0
TITLE: DATA PATH AND STATUS
SIZE D
CODE CS
NUMBER M8552-0-DPS5
REV. D

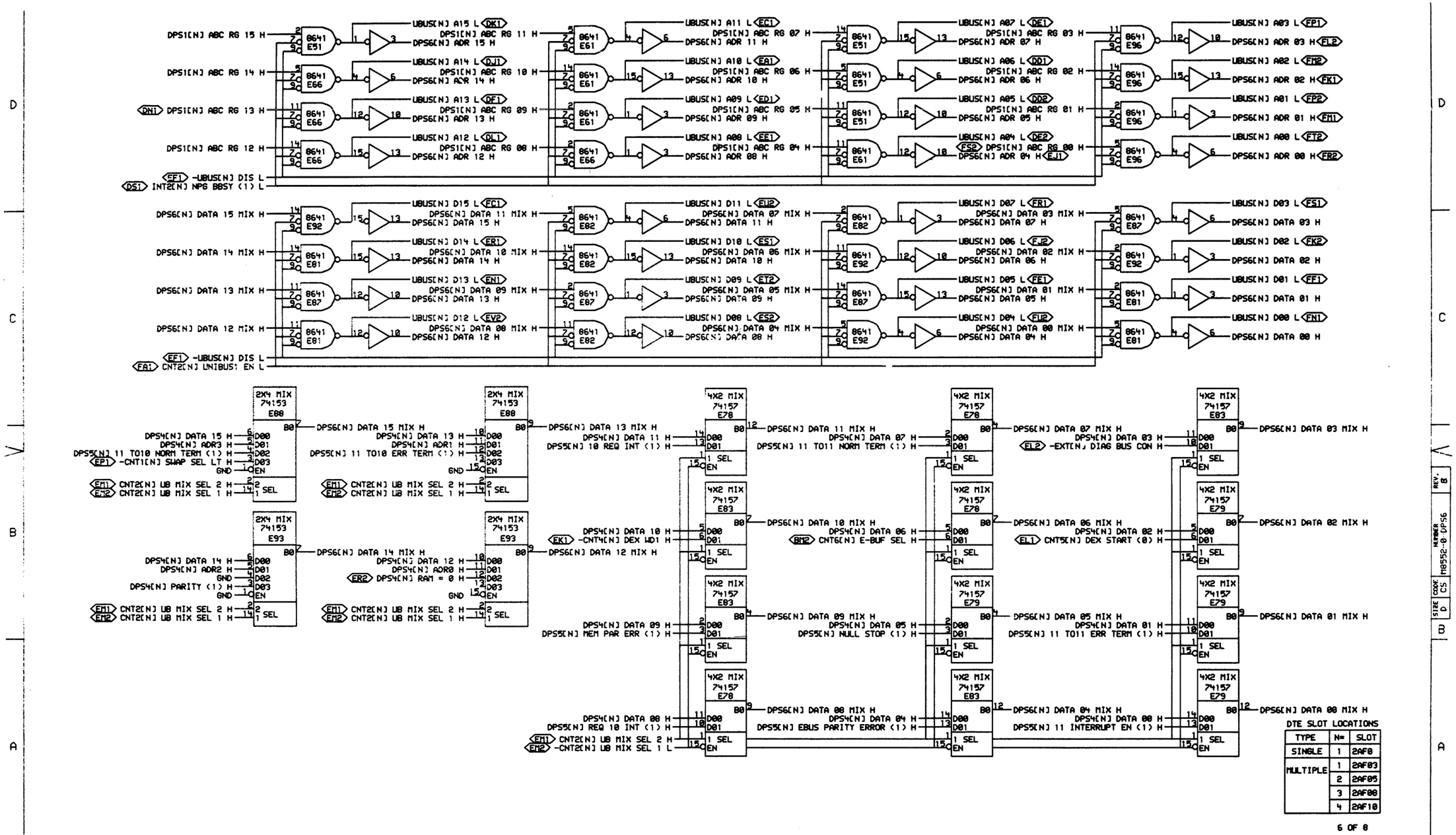

DTE SLOT LOCATIONS

TYPE	N=	SLOT
SINGLE	1	2AF0
MULTIPLE	1	2AF03
	2	2AF05
	3	2AF08
	4	2AF10

6 OF 8

"THIS DRAWING AND SPECIFICATIONS, HEREIN, ARE THE PROPERTY OF DIGITAL EQUIPMENT CORPORATION AND SHALL NOT BE REPRODUCED OR COPIED OR USED IN WHOLE OR IN PART AS THE BASIS FOR THE MANUFACTURE OR SALE OF ITEMS WITHOUT WRITTEN PERMISSION.
COPYRIGHT © 1977, DIGITAL EQUIPMENT CORPORATION"

REVISIONS		
CHK	CHANGE NO.	REV

M8552-00005 B
W. BRUCKERT

DRW. DATE 10-FEB-77 ENG. M. Bruckert DATE 23 FEB 77
CHK. DATE 2/11/77 BOARD LOCATION: SHEET OF
DPS6RS.DRW[4,613] 09-FEB-77 13:05 NEXT HIGHER ASSEMBLY:
FIRST USED ON OPTION/MODEL: DTE20 B-DD-M8552-0

TITLE: DATA PATH AND STATUS

SIZE	CODE	NUMBER	REV
D	CS	M8552-0-DPS6	B

426

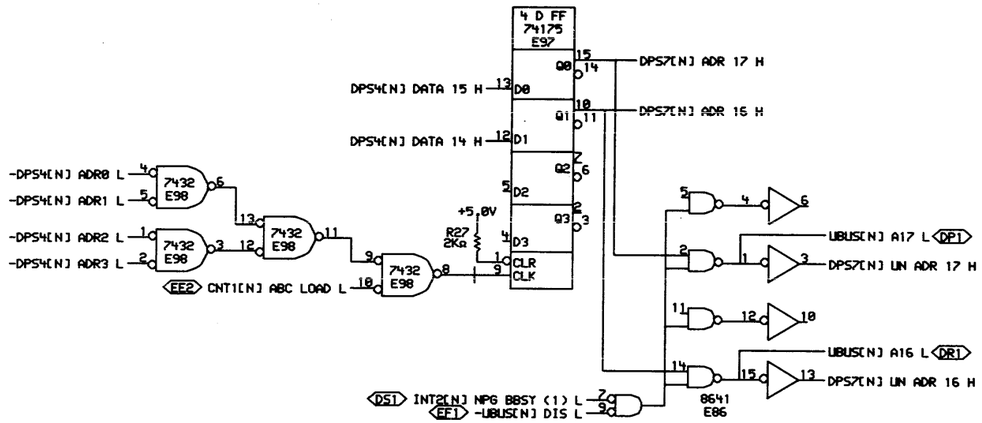

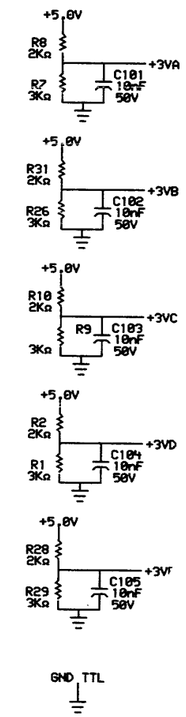

DTE SLOT LOCATIONS

TYPE	N=	SLOT
SINGLE	1	2AF0
MULTIPLE	1	2AF03
	2	2AF05
	3	2AF08
	4	2AF10

7 OF 8

"THIS DRAWING AND SPECIFICATIONS, HEREIN, ARE THE PROPERTY OF DIGITAL EQUIPMENT CORPORATION AND SHALL NOT BE REPRODUCED OR COPIED OR USED IN WHOLE OR IN PART AS THE BASIS FOR THE MANUFACTURE OR SALE OF ITEMS WITHOUT WRITTEN PERMISSION.
COPYRIGHT © 1977, DIGITAL EQUIPMENT CORPORATION"

REVISIONS		
CHK	CHANGE NO.	REV

M8552-00005 D
W. BRUCKERT

DRN. 11-FEB-77 ENG. DATE 15-FEB-77
CHK'D DATE BOARD LOCATION:
SHEET 1 OF 1
DPS7RS.DRW[4,6133] 09-FEB-77 13:06 NEXT HIGHER ASSEMBLY:
FIRST USED ON OPTION/MODEL: DTE20 B-DD-M8552-0

TITLE: DATA PATH AND STATUS

SIZE	CODE	NUMBER	REV.
D	CS	M8552-0-DPS7	D

427

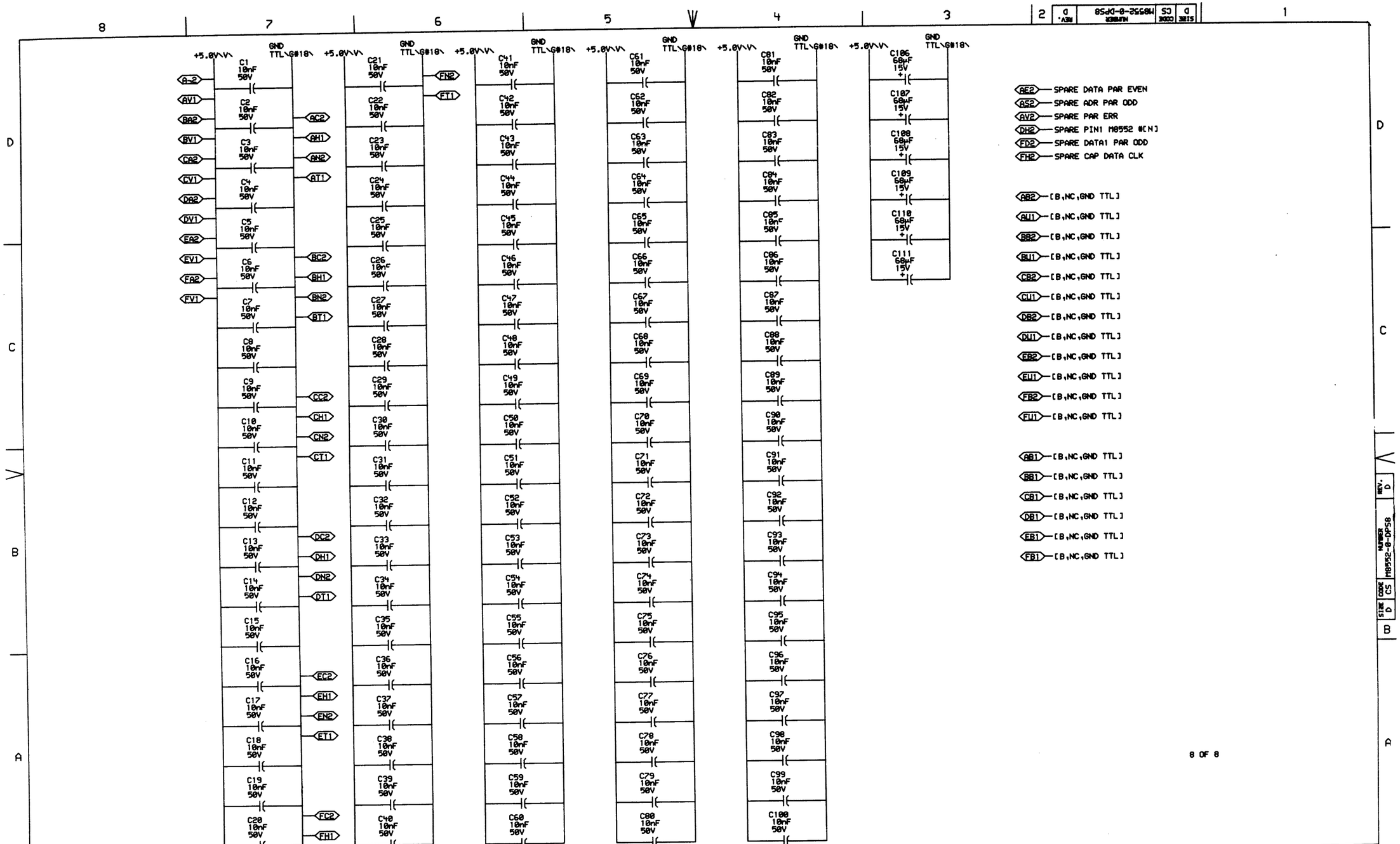

"THIS DRAWING AND SPECIFICATIONS, HEREIN, ARE THE PROPERTY OF DIGITAL EQUIPMENT CORPORATION AND SHALL NOT BE REPRODUCED OR COPIED OR USED IN WHOLE OR IN PART AS THE BASIS FOR THE MANUFACTURE OR SALE OF ITEMS WITHOUT WRITTEN PERMISSION.
COPYRIGHT © 1977, DIGITAL EQUIPMENT CORPORATION"

REVISIONS		
CHK	CHANGE NO.	REV

M8552-00005 D
W.BRUCKERT
12-APR-77

digital

DRW. L. Loosley DATE 11-FEB-77
CHK'D. DATE 2/11/77
ENG. W. Bruckert DATE 23FEB77
BOARD LOCATION:
SHEET 1 OF 1
DPS8RS.DRW[4,613] 10-FEB-77 10:36
NEXT HIGHER ASSEMBLY:
FIRST USED ON OPTION/MODEL: DTE20
B-DD-M8552-0

TITLE: DATA PATH & STATUS PWR, CAP & GND

SIZE	CODE	NUMBER	REV.
D	CS	M8552-0-DPS8	D

428

1 N/P

REVISION CONTROL SHEET

CUSTOMER PRINT SET	MFG SET	DRAWING NO	NO OF SHT	DESCRIPTION	OPTION NO/FILE DATE	REVISIONS										
			-	MODULE REVISION		A	B	C	D	E	F	H	J	J		J
		D-UA-M8553-Ø-Ø	7	1Ø/11 BUS AND DATA CONTROL		A	A	B	C	D	E	F	H	HI		HI
		D-CS-M8553-Ø-CNT1	1	DTE20 CONTROL LOGIC		-	-	A	B	B	B	B	B	BI		BI
		D-CS-M8553-Ø-CNT2	1	DTE20 CONTROL LOGIC		-	-	A	B	B	B	B	C	CI		CI
		D-CS-M8553-Ø-CNT3	1	DTE20 CONTROL LOGIC		-	-	A	A	A	A	A	A	AI		AI
		D-CS-M8553-Ø-CNT4	1	DTE20 CONTROL LOGIC		-	-	A	B	B	B	C	D	DI		DI
		D-CS-M8553-Ø-CNT5	1	DTE20 CONTROL LOGIC		-	-	A	A	A	B	B	B	BI		BI
		D-CS-M8553-Ø-CNT6	1	DTE20 CONTROL LOGIC		-	-	A	B	B	B	B	B	BI		BI
		D-CS-M8553-Ø-CNT7	1	DTE20 CONTROL LOGIC		-	-	A	A	A	A	A	A	AI		AI
		D-CS-M8553-Ø-CNT8	1	DTE20 CONTROL LOGIC		-	-	A	B	B	C	C	C	CI		CI
		D-CS-M8553-Ø-CNT9	1	DTE20 CONTROL LOGIC		-	-	A	A	A	A	A	A	AI		AI
				PWR, CAP, AND GND												
		K-CO-M8553-Ø-4	1	1Ø/11 BUS AND DATA CONTROL		D	D	D	D	D	D	D	D	D		D
		D-AH-M8553-Ø-5	4	1Ø/11 BUS AND DATA CONTROL		C	C	C	C	C	C	C	C	C		C
		B-MH-M8553-Ø-6	1	MODULE ECO HISTORY		-	A	B	C	D	E	F	H	J		J
		5010514		ETCH CIRCUIT BOARD		D	D	D	D	D	D	D	D	D		D
		PØØ-M8553-ØØ		PROCESS SHEET (REF ONLY)		-	-	-	-	-	-	-	-	-		-
														REWORK VERSION	RELAYOUT VERSION SEE SHEET 3	
					ECO NO	OPIG	00001	00002	00003	00004	00005	00006	00007	00008		MRØ1Ø

CUSTOMER PRINT SET CODES
X = PRINT OF DOCUMENT INCLUDED IN PRINT SET
C = INCLUDES ALL PRINTS INDICATED ON DOCUMENT
S = CONFIDENTIAL AUTHORIZED SIGNATURE REQUIRED

TITLE	SHEET	SIZE	CODE	NUMBER	RF
1Ø/11 BUS AND DATA CONTROL	SHEET 2 OF 3	B	DD	M8553-Ø	L

429

MR

"THIS DRAWING AND SPECIFICATIONS, HEREIN, ARE THE PROPERTY OF DIGITAL EQUIPMENT CORPORATION AND SHALL NOT BE REPRODUCED OR COPIED OR USED IN WHOLE OR IN PART AS THE BASIS FOR THE MANUFACTURE OR SALE OF ITEMS WITHOUT WRITTEN PERMISSION. COPYRIGHT © 1975 DIGITAL EQUIPMENT CORPORATION"

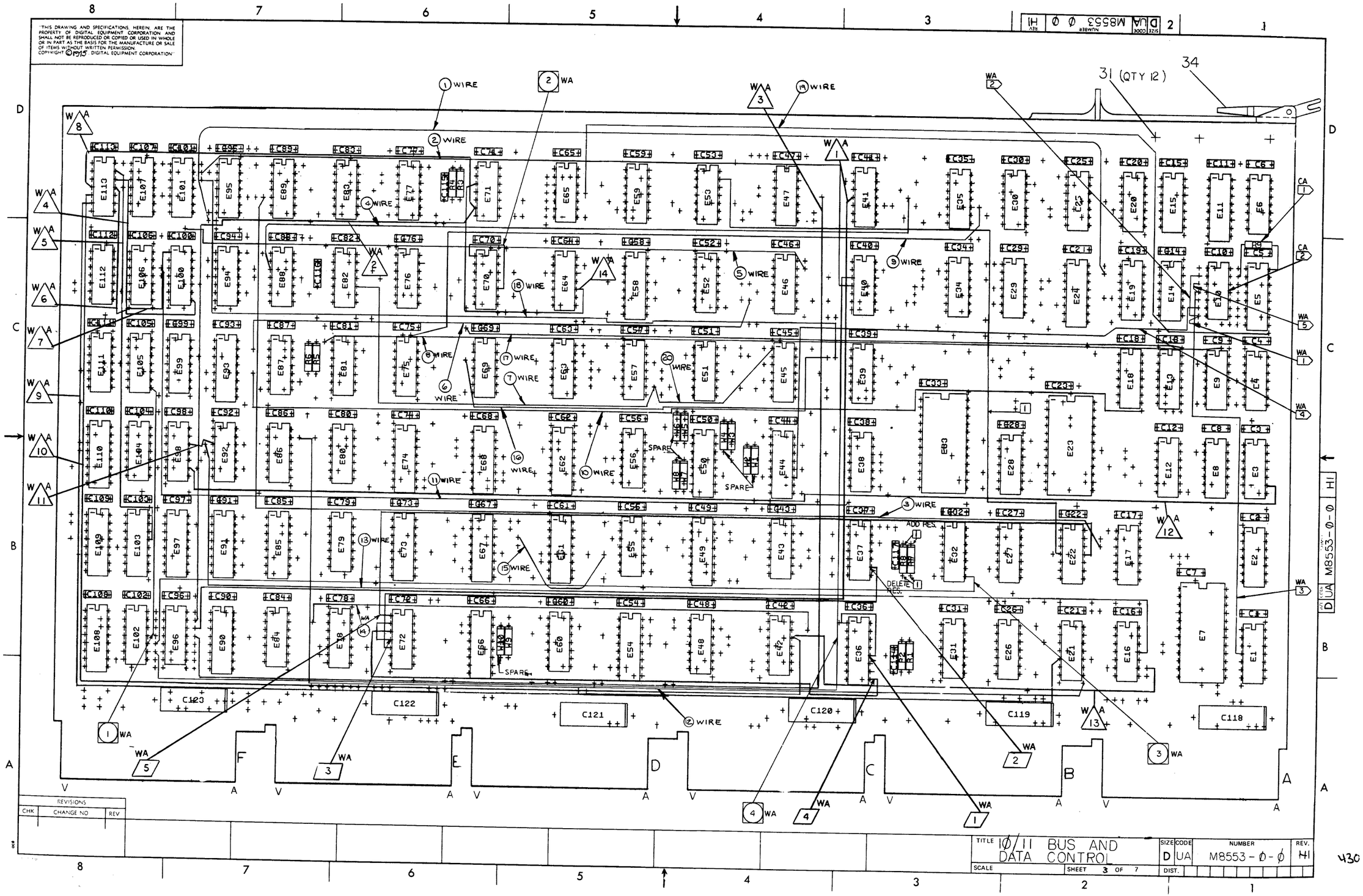

REVISIONS		
CHK	CHANGE NO	REV

TITLE Ø/11 BUS AND DATA CONTROL

SIZE D | CODE UA | NUMBER M8553-Ø-Ø | REV. H1

SCALE | SHEET 3 OF 7 | DIST.

430

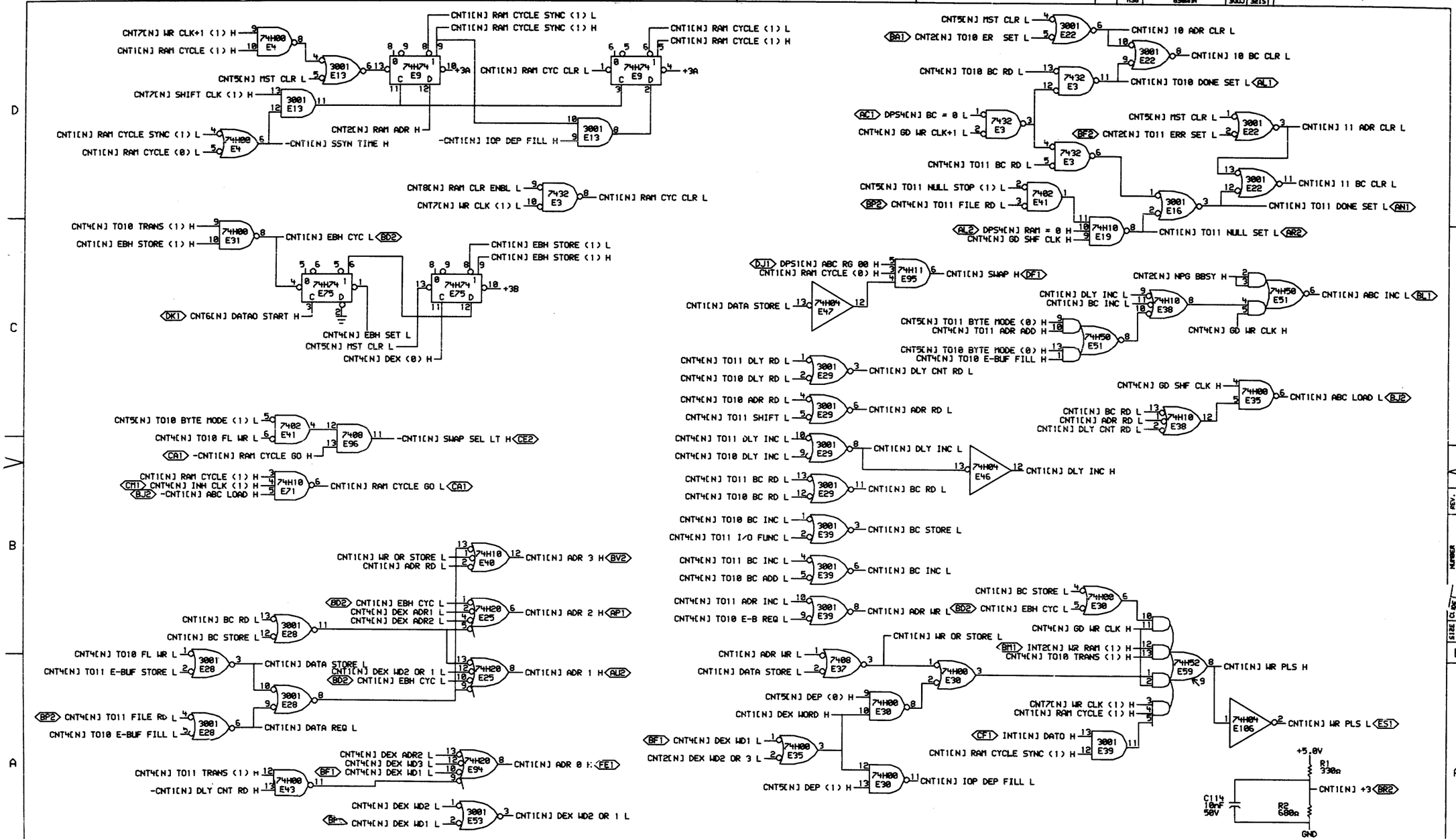

;1 OF 9

"THIS DRAWING AND SPECIFICATIONS, HEREIN, ARE THE PROPERTY OF DIGITAL EQUIPMENT CORPORATION AND SHALL NOT BE REPRODUCED OR COPIED OR USED IN WHOLE OR IN PART AS THE BASIS FOR THE MANUFACTURE OR SALE OF ITEMS WITHOUT WRITTEN PERMISSION. COPYRIGHT © 1975, DIGITAL EQUIPMENT CORPORATION"

REVISIONS		
CHK	CHANGE NO.	REV

M8553-0000 B — M8553-0000B B1 — B.BRUCKERT — B. BRUCKERT — 11-APR-77

digital

DRN. J. Fordy — DATE 08-DEC-75 — ENG. W. Bruckert — DATE 12/4/75
CHK W. Stephenson — DATE 12/9/75 — BOARD LOCATION: — SHEET 1 OF 1
CNT1X.DRW[4,426] 08-DEC-75 14:08 — NEXT HIGHER ASSEMBLY: B-DD-M8553-0
FIRST USED ON OPTION/MODEL: KL10

TITLE: DTE20 CONTROL LOGIC

SIZE	CODE	NUMBER	REV.
D	CS	M8553-0-CNT1	B1

431

SLOT 2

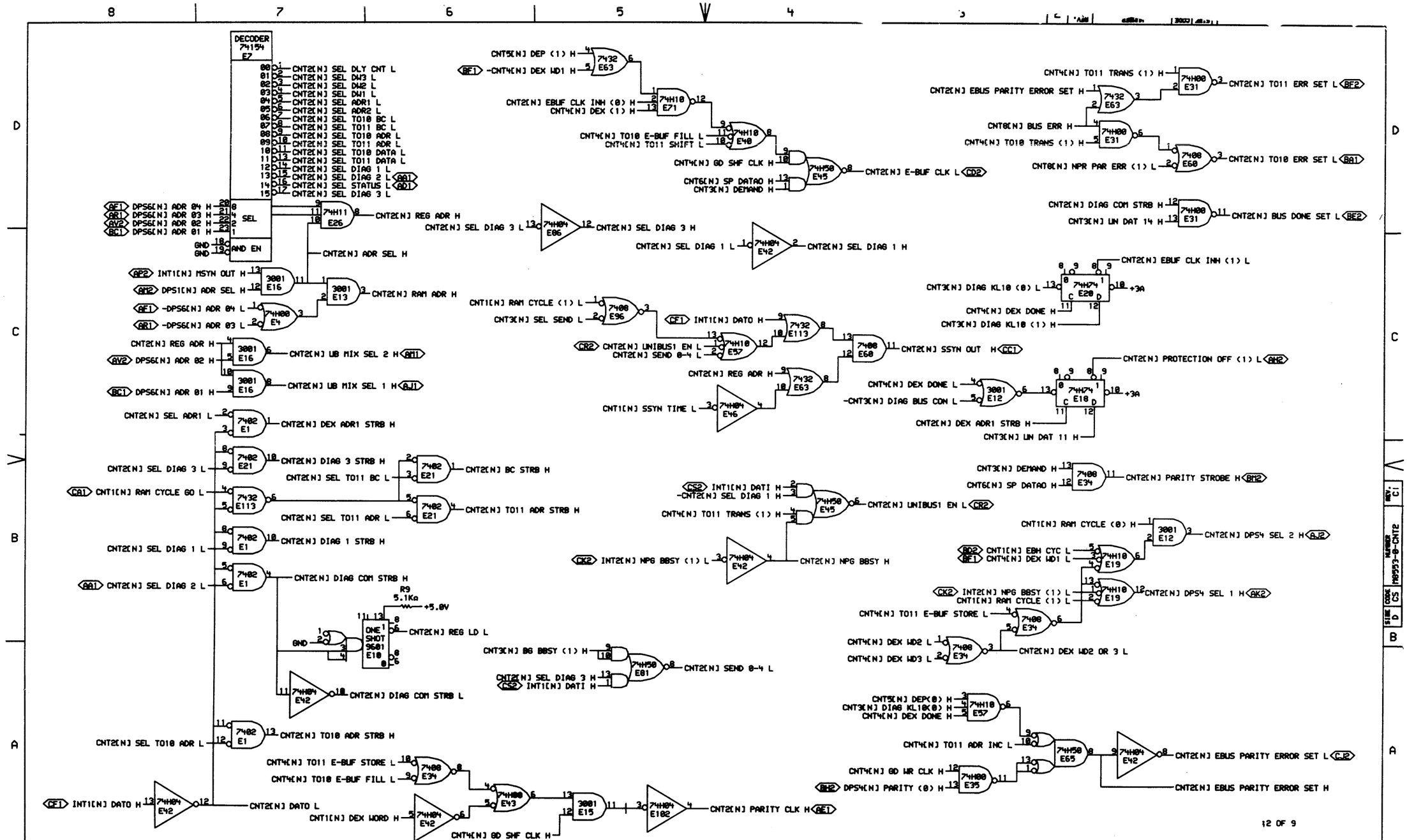

"THIS DRAWING AND SPECIFICATIONS, HEREIN, ARE THE PROPERTY OF DIGITAL EQUIPMENT CORPORATION AND SHALL NOT BE REPRODUCED OR COPIED OR USED IN WHOLE OR IN PART AS THE BASIS FOR THE MANUFACTURE OR SALE OF ITEMS WITHOUT WRITTEN PERMISSION. COPYRIGHT © 1976, DIGITAL EQUIPMENT CORPORATION"

REVISIONS			REVISIONS		
CHK	CHANGE NO.	REV	CHK	CHANGE NO.	REV
	M8553-00007	C		M8553-00008	C1
	W. BRICKER			B. BRUCKERT	

digital

DRN. W. Crosby DATE 14-DEC-76 ENG. W. Bruckert DATE 7 FEB 76
CHK'D. DATE
CNT2X.DSK(4,426) 14-DEC-76 12:45 BOARD LOCATION: SHEET 1 OF 1
FIRST USED ON OPTION-MODEL: KL10 NEXT HIGHER ASSEMBLY: B-DD-M8553-0

TITLE: DTE20 CONTROL LOGIC

SIZE	CODE	NUMBER	REV.
D	CS	M8553-0-CNT2	C1

432

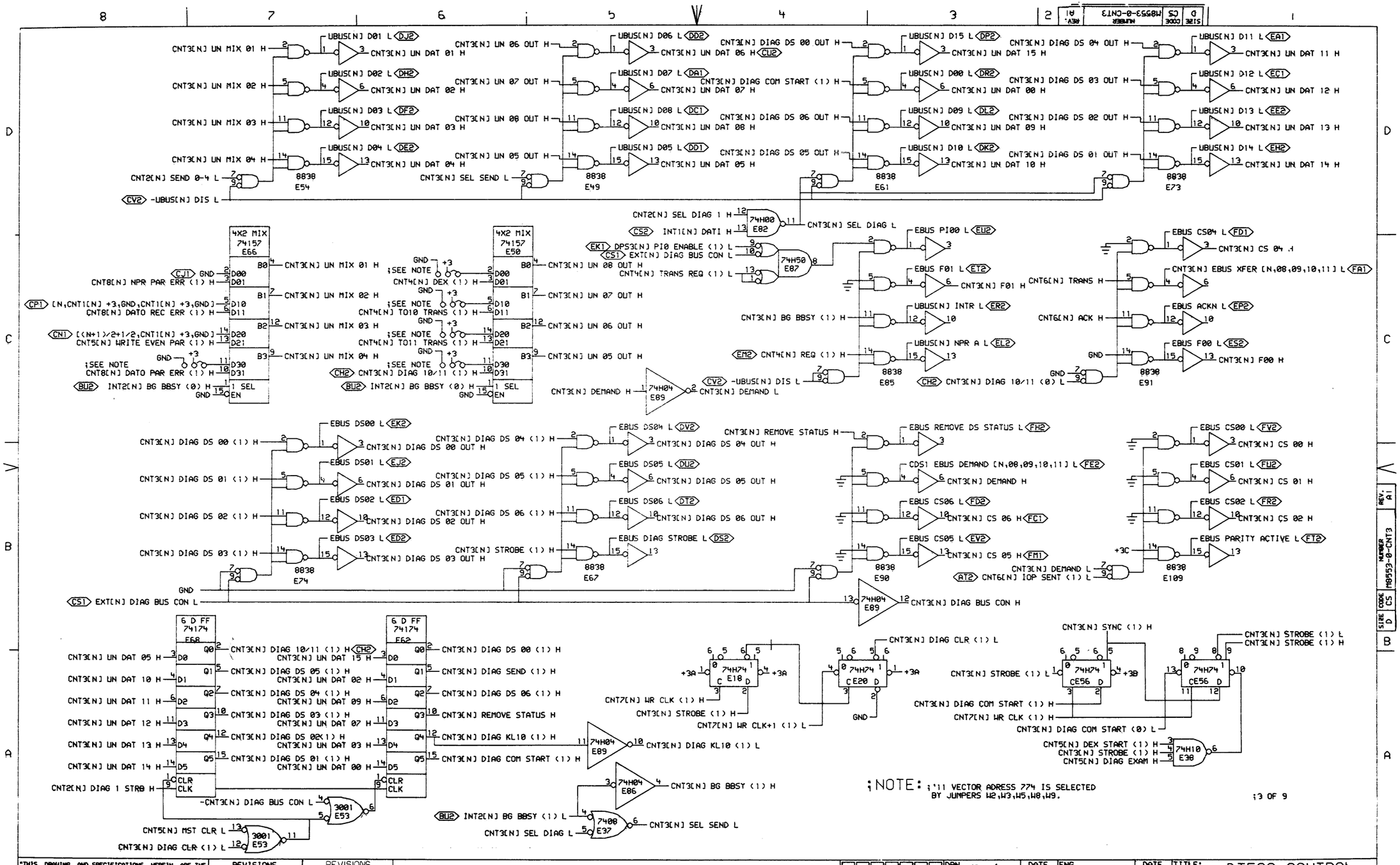

"THIS DRAWING AND SPECIFICATIONS, HEREIN, ARE THE PROPERTY OF DIGITAL EQUIPMENT CORPORATION AND SHALL NOT BE REPRODUCED OR COPIED OR USED IN WHOLE OR IN PART AS THE BASIS FOR THE MANUFACTURE OR SALE OF ITEMS WITHOUT WRITTEN PERMISSION. COPYRIGHT © 1975, DIGITAL EQUIPMENT CORPORATION"

REVISIONS			REVISIONS		
CHK	CHANGE NO.	REV	CHK	CHANGE NO.	REV
	M8553-00002	A		M8553-00003	A1
	W. BRUCKERT			W. BRUCKERT	

digital

DRN. Foosby 5/23/75 | DATE | ENG. M. Bruckert 6/5/75 | DATE
CHK'D Stephenson 5/23/75 | DATE | BOARD LOCATION:
CNT3[C4,426] 20-MAY-75 15:25 | SHEET 1 OF 1 | NEXT HIGHER ASSEMBLY:
FIRST USED ON OPTION/MODEL: KL10 | B-DD-M8553-0

TITLE: DTE20 CONTROL LOGIC

SIZE	CODE	NUMBER	REV.
D	CS	M8553-0-CNT3	A1

433

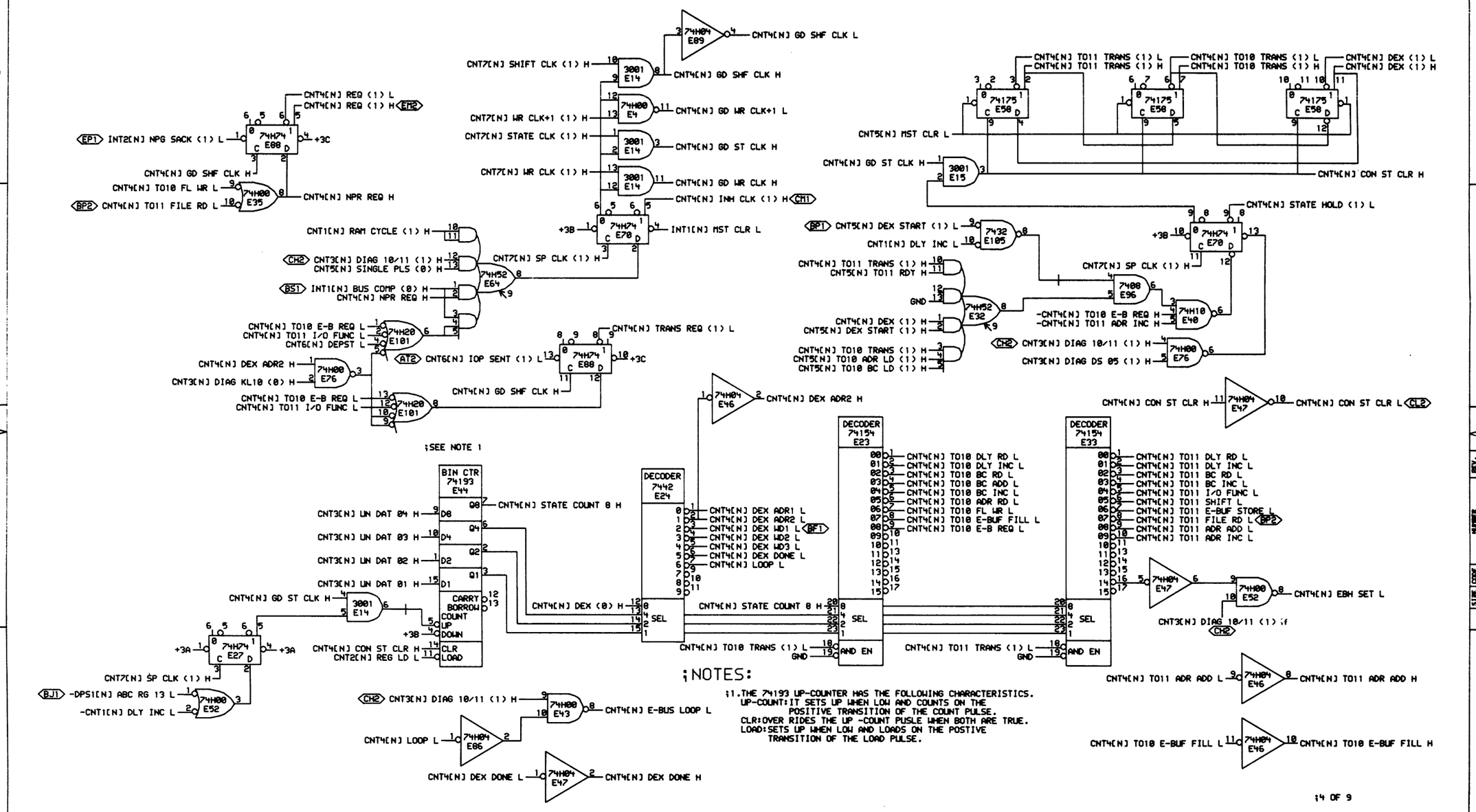

"THIS DRAWING AND SPECIFICATIONS, HEREIN, ARE THE PROPERTY OF DIGITAL EQUIPMENT CORPORATION AND SHALL NOT BE REPRODUCED OR COPIED OR USED IN WHOLE OR IN PART AS THE BASIS FOR THE MANUFACTURE OR SALE OF ITEMS WITHOUT WRITTEN PERMISSION. COPYRIGHT © 1976, DIGITAL EQUIPMENT CORPORATION"

REVISIONS		
CHK	CHANGE NO.	REV
W.B.	M8553-00007	D
W. BRUCKET		

M8553-0-CNT4 | D1

digital

DRN: J. Toomey | DATE 14-DEC-76 | ENG: W. Bruckert | DATE 17 FEB 76
CHK: | DATE 12-3-76 | BOARD LOCATION: | SHEET 1 OF 1
CNTX.DRW[4,426] | 13-DEC-76 15:21 | NEXT HIGHER ASSEMBLY: B-DD-M8553-0
FIRST USED ON OPTION/MODEL: KL10

TITLE: DTE20 CONTROL LOGIC

SIZE	CODE	NUMBER	REV
D	CS	M8553-0-CNT4	D1

434

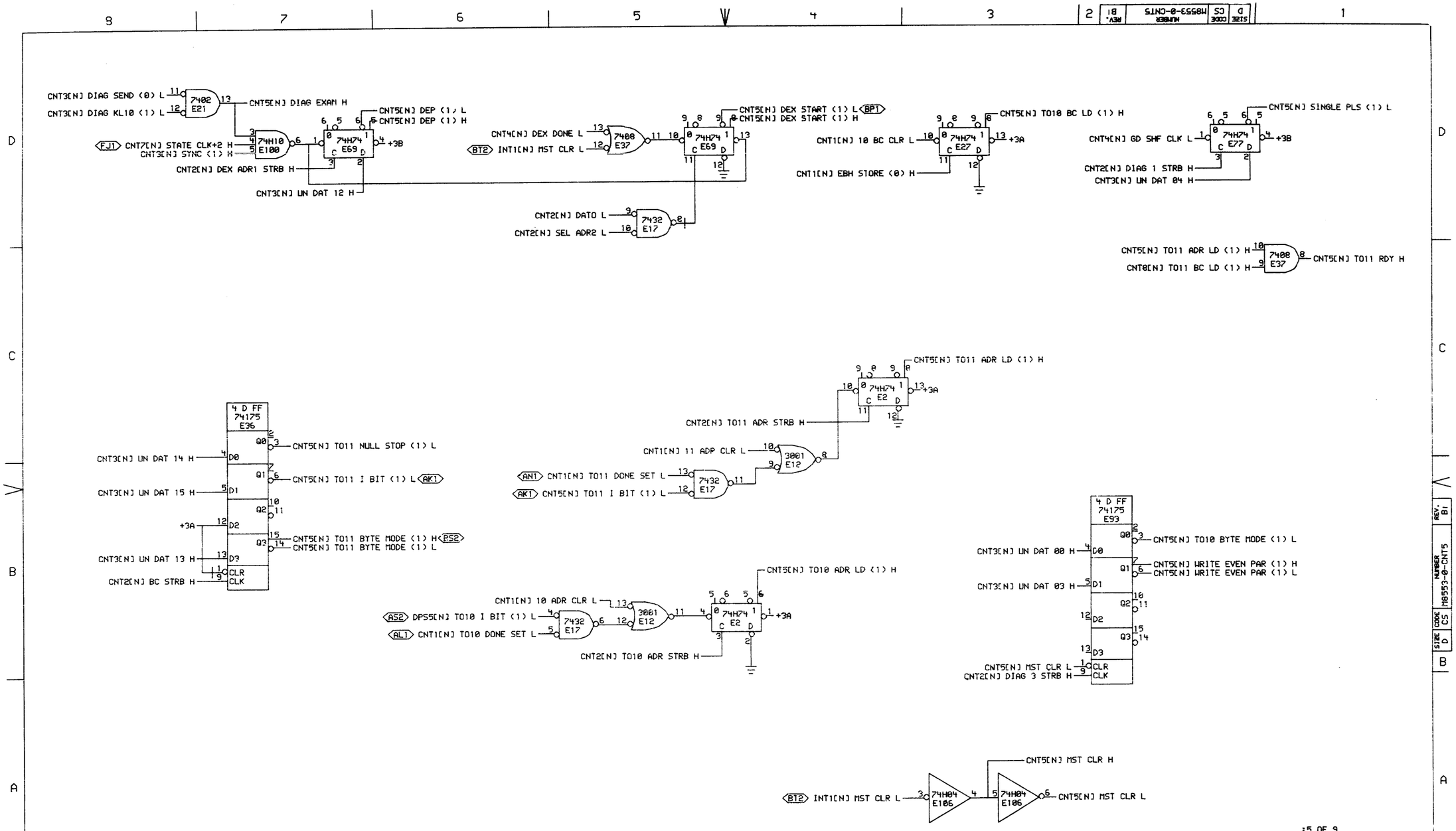

435

"THIS DRAWING AND SPECIFICATIONS, HEREIN, ARE THE PROPERTY OF DIGITAL EQUIPMENT CORPORATION AND SHALL NOT BE REPRODUCED OR COPIED OR USED IN WHOLE OR IN PART AS THE BASIS FOR THE MANUFACTURE OR SALE OF ITEMS WITHOUT WRITTEN PERMISSION.
COPYRIGHT © 1976, DIGITAL EQUIPMENT CORPORATION"

REVISIONS		
CHK	CHANGE NO.	REV
	M8553-00005	B
	M8553-00008	B1

W. BRUCKERT

digital

DRAWN: D. Loosley
CHKD: D. Stephenson

DATE	ENG.	DATE
16-JUN-76	W. Bruckert	22-JUN-76
DATE	BOARD LOCATION:	
16-JUN-76	SHEET 1 OF 1	

CNT5X.DRW[4,426] 18-JUN-76 09:00 NEXT HIGHER ASSEMBLY: B-DD-M8553-0

FIRST USED ON OPTION/MODEL: KL10

TITLE: DTE20 CONTROL LOGIC

SIZE	CODE	NUMBER	REV.
D	CS	M8553-0-CNT5	B1

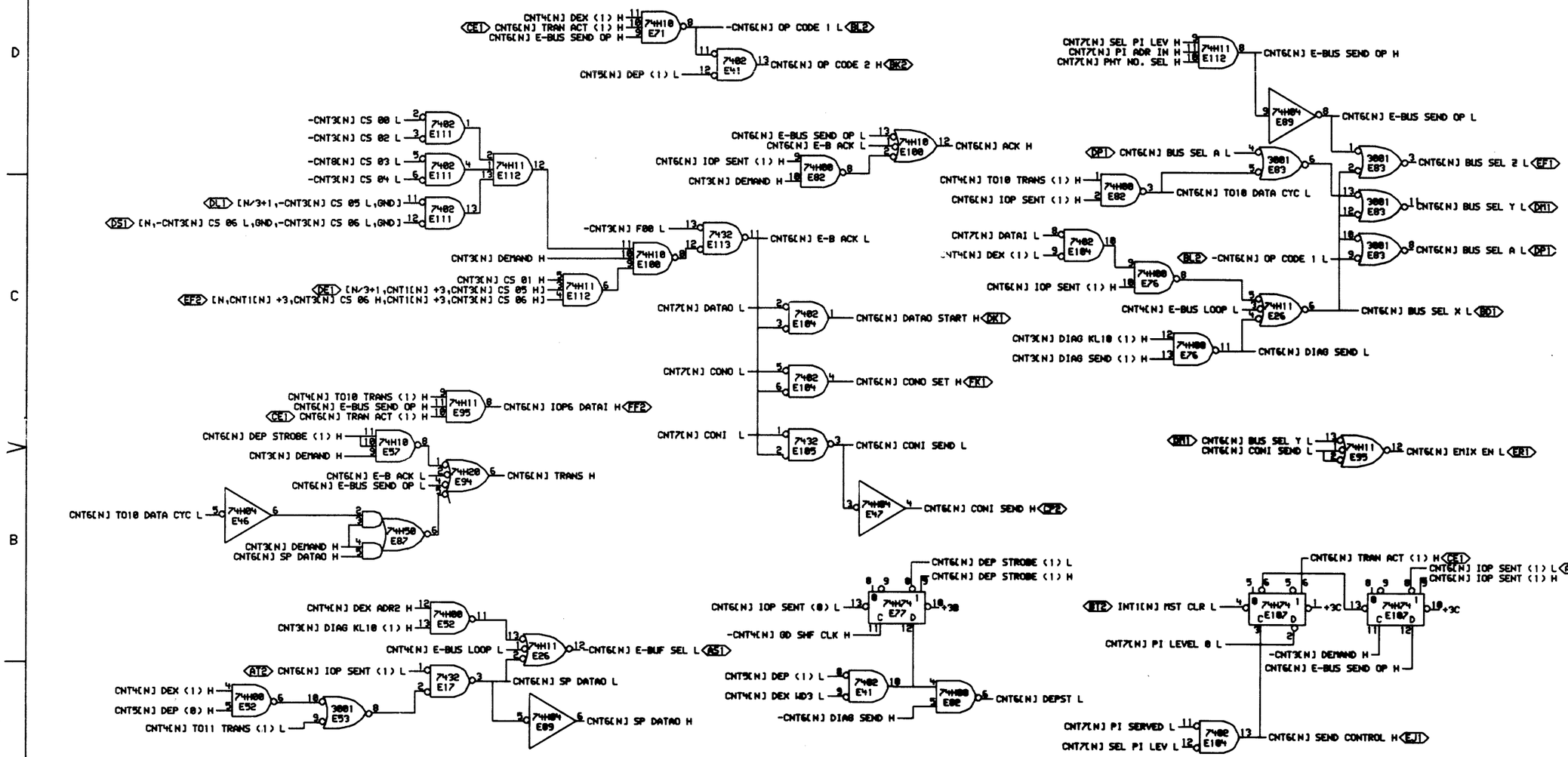

16 OF 9

"THIS DRAWING AND SPECIFICATIONS, HEREIN, ARE THE PROPERTY OF DIGITAL EQUIPMENT CORPORATION AND SHALL NOT BE REPRODUCED OR COPIED OR USED IN WHOLE OR IN PART AS THE BASIS FOR THE MANUFACTURE OR SALE OF ITEMS WITHOUT WRITTEN PERMISSION. COPYRIGHT © 1975, DIGITAL EQUIPMENT CORPORATION"

REVISIONS		
CHK	CHANGE NO.	REV

M8553-00003	B	M8553-00008	B1
B.BRUCKERT		W BRUCKERT	

digital

DRN. | DATE 08-DEC-75 | ENG. | DATE 12/4/75
CHK. | DATE 08-DEC-75 14:18 | BOARD LOCATION: SHEET OF
CHK. DRW. | NEXT HIGHER ASSEMBLY: B-DD-M8553-0
FIRST USED ON OPTION/MODEL: KL10

TITLE: DTE20 CONTROL LOGIC

SIZE	CODE	NUMBER	REV.
D	CS	M8553-0-CNT6	B1

436

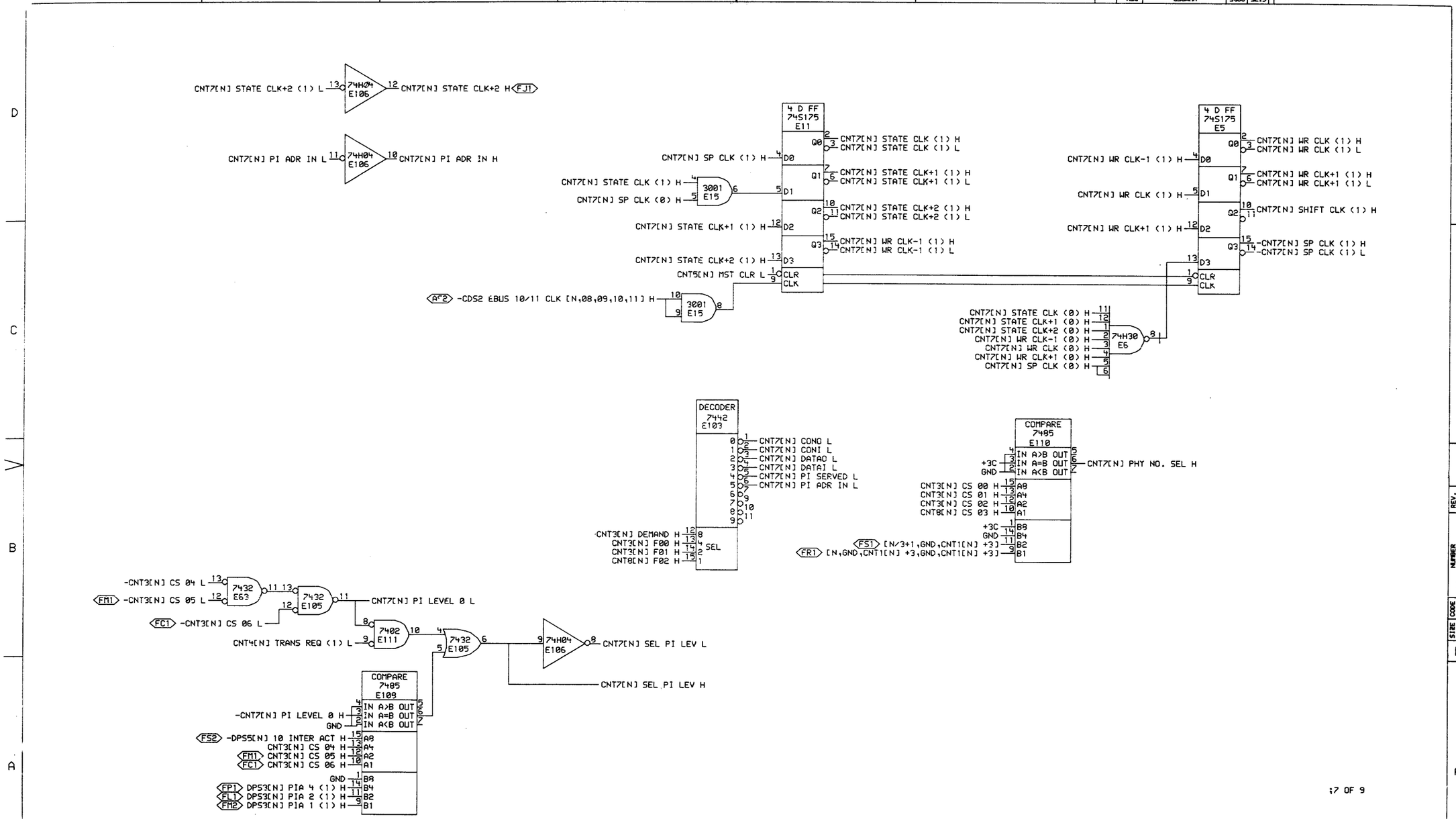

"THIS DRAWING AND SPECIFICATIONS, HEREIN, ARE THE PROPERTY OF DIGITAL EQUIPMENT CORPORATION AND SHALL NOT BE REPRODUCED OR COPIED OR USED IN WHOLE OR IN PART AS THE BASIS FOR THE MANUFACTURE OR SALE OF ITEMS WITHOUT WRITTEN PERMISSION. COPYRIGHT © 1975, DIGITAL EQUIPMENT CORPORATION"

REVISIONS				
CH$	CHANGE NO.	REV	M8553-00008	A1
	M8553-00002	A	W. BRUCKER	
	W. BRUCKER			

digital

DRN Fomby DATE 5/23/75 ENG. W. Bruckert DATE 6/5/75
CHK Hughes DATE 5/23/75 BOARD LOCATION:
SHEET 1 OF 1
CNT7XC[4,426] 22-MAY-75 15:34 NEXT HIGHER ASSEMBLY:
FIRST USED ON OPTION/MODEL: KL10 B-DD-M8553-0

TITLE: DTE20 CONTROL LOGIC

SIZE	CODE	NUMBER	REV.
D	CS	M8553-0-CNT7	A1

437

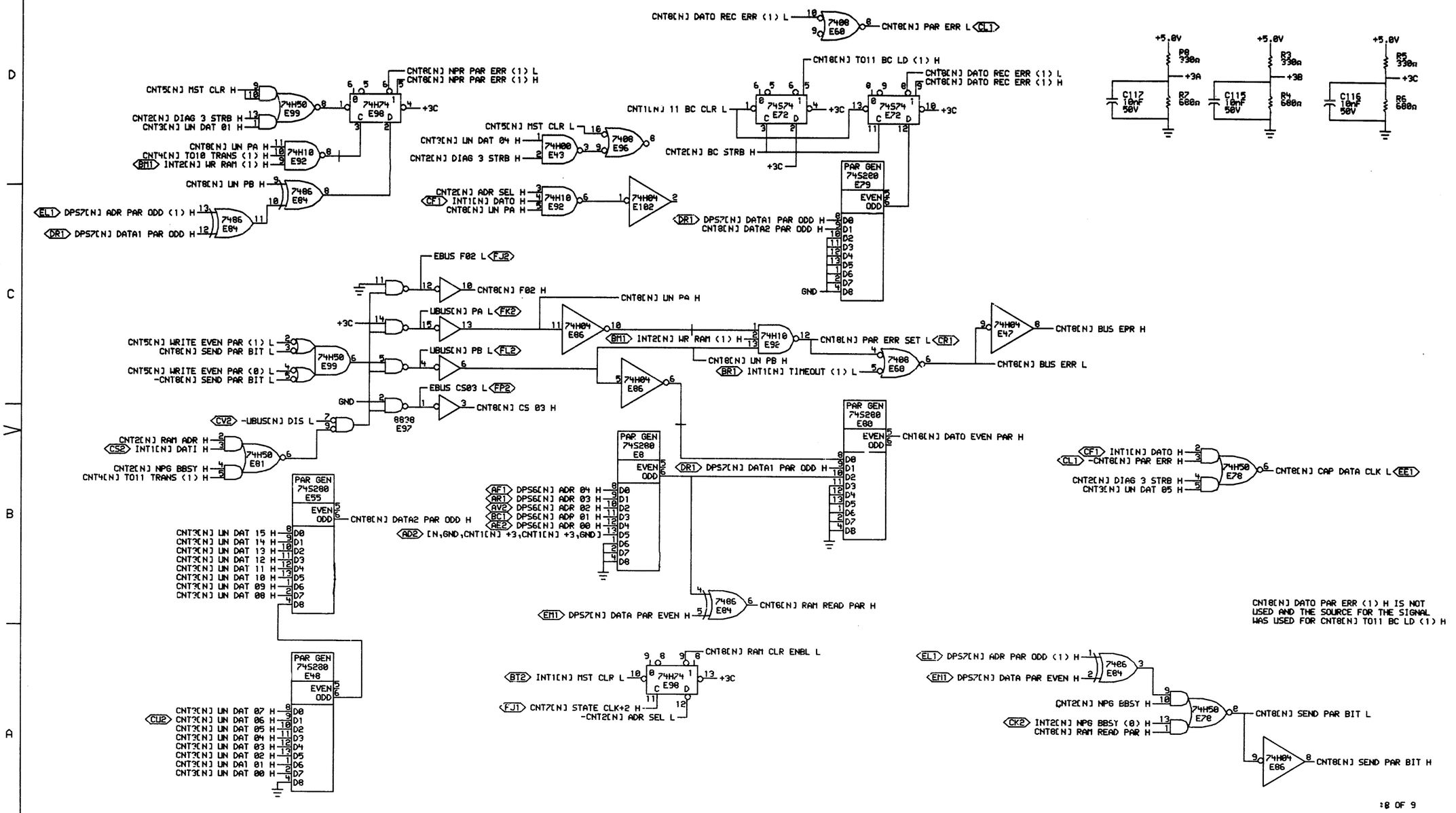

"THIS DRAWING AND SPECIFICATIONS, HEREIN, ARE THE PROPERTY OF DIGITAL EQUIPMENT CORPORATION AND SHALL NOT BE REPRODUCED OR COPIED OR USED IN WHOLE OR IN PART AS THE BASIS FOR THE MANUFACTURE OR SALE OF ITEMS WITHOUT WRITTEN PERMISSION. COPYRIGHT © 1976, DIGITAL EQUIPMENT CORPORATION"

REVISIONS			M8553-00008 C1
CHK	CHANGE NO.	REV	W. BRUCKET 1/6/77
	M8553-00005	C	W. BRUCKERT 12-APR-77
W. BRUCKERT 7-12-76			

digital	DRN.	DATE 16-JUN-76	ENG.	DATE 22 JUN 76	TITLE: DTE20 CONTROL LOGIC
	CHK	DATE	BOARD LOCATION: SHEET 1 OF 1		
CNT8X.DRW[4,426]	16-JUN-76 09:02	NEXT HIGHER ASSEMBLY:			SIZE D / CODE CS / NUMBER M8553-0-CNT8 / REV. C1
FIRST USED ON OPTION/MODEL: KL10		B-DD-M8553-0			

438

"PECIFICATIONS, HEREIN, ARE THE
'IPMENT CORPOR.TION A.D SHALL
ED OR USED IN WH LE OR IN
THE MANUFACTURE OR SALE OF
ISSION.
EQUIPMENT CORPORATION'

REVISIONS			
CHK	CH-GE NO.	REV	
	M8553-00002	A	
W. BRUCKERT			

M8553-00008 A1
W. BRUCKET

digital

DRN: S. Foonly DATE 5/23/75
CHK'D: Stephens DATE 5/23/75
ENG: W. Bruckert DATE 6/5/75
BOARD LOCATION:
SHEET 1 OF 1
CNT9EX[4,-26] 20-MAY-75 15:36
NEXT HIGHER ASSEMBLY:
FIRST USED ON OPTION/MODEL: KL10 B-DD-M8553-0

TITLE: DTE20 CNTRL LOGIC PWR, CAP, AND GND

SIZE	CODE	NUMBER	REV.
D	CS	M8553-0-CNT9	A1

439

REVISION CONTROL SHEET

CUSTOMER PRINT SET	MFG SET	DRAWING NO	NO OF SHT	DESCRIPTION	OPTION NO/FILE DATE	REVISIONS NEW	LAYOUT	VERSION
			-	MODULE REVISION		K	L	L
		D-UA-M8553-Ø-Ø	7	1Ø/11 BUS AND DATA CONTROL		J	K	K
		D-CS-M8553-Ø-CNT1	1	DTE20 CONTROL LOGIC		C	C	C
		D-CS-M8553-Ø-CNT2	1	DTE20 CONTROL LOGIC		D	E	E
		D-CS-M8553-Ø-CNT3	1	DTE20 CONTROL LOGIC		B	B	B
		D-CS-M8553-Ø-CNT4	1	DTE20 CONTROL LOGIC		E	E	E
		D-CS-M8553-Ø-CNT5	1	DTE20 CONTROL LOGIC		C	C	C
		D-CS-M8553-Ø-CNT6	1	DTE20 CONTROL LOGIC		C	C	C
		D-CS-M8553-Ø-CNT7	1	DTE20 CONTROL LOGIC		B	B	B
		D-CS-M8553-Ø-CNT8	1	DTE20 CONTROL LOGIC		D	D	D
		D-CS-M8553-Ø-CNT9	1	DTE20 CONTROL LOGIC		B	C	C
				PWR, CAP, AND GND				
		K-PC-M8553-O-DBC	1	P.C. DESIGN DATA BASE		E	E	F
		D-AH-M8553-Ø-5	4	1Ø/11 BUS AND DATA CONTROL		D	D	D
		B-MH-M8553-Ø-6	1	MODULE ECO HISTORY		REF	REF	REF
		5010514	-	ETCH CIRCUIT BOARD		E	E	E
		P00-M8553-ØØ		PROCESS SHEET (REF ONLY)		-	-	-

CUSTOMER PRINT SET CODES
X = PRINT OF DOCUMENT INCLUDED IN PRINT SET
C = INCLUDES ALL PRINTS INDICATED ON DOCUMENT
S = CONFIDENTIAL AUTHORIZED SIGNATURE REQUIRED

ECO NO			
	00008	00009	MRØ1Ø

TITLE		SIZE	CODE	NUMBER	REV
1Ø/11 BUS AND DATA CONTROL	SHEET 3 OF 3	B	DD	M8553-Ø	L

MR

"THIS DRAWING AND SPECIFICATIONS, HEREIN, ARE THE PROPERTY OF DIGITAL EQUIPMENT CORPORATION AND SHALL NOT BE REPRODUCED OR COPIED OR USED IN WHOLE OR IN PART AS THE BASIS FOR THE MANUFACTURE OR SALE OF ITEMS WITHOUT WRITTEN PERMISSION. COPYRIGHT © 1972 DIGITAL EQUIPMENT CORPORATION"

REVISIONS		
CHK	CHANGE NO	REV

TITLE	SIZE	CODE	NUMBER	REV.
10/11 BUS AND DATA CONTROL	D	UA	M8553-0-0	K
SCALE 2/1	SHEET 2 OF 5	DIST.		

441

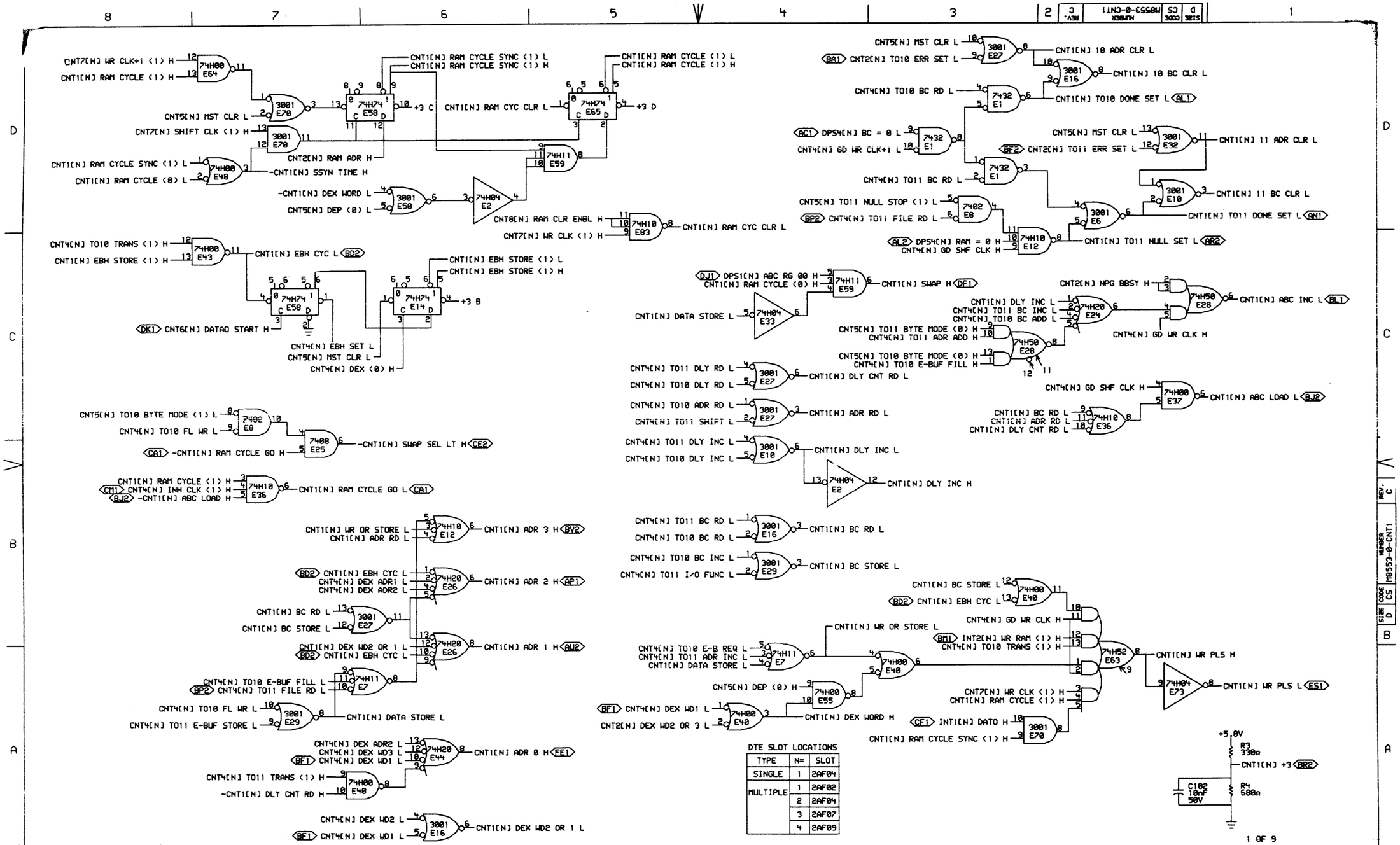

DTE SLOT LOCATIONS

TYPE	N=	SLOT
SINGLE	1	2AF04
MULTIPLE	1	2AF02
	2	2AF04
	3	2AF07
	4	2AF09

"THIS DRAWING AND SPECIFICATIONS, HEREIN, ARE THE PROPERTY OF DIGITAL EQUIPMENT CORPORATION AND SHALL NOT BE REPRODUCED OR COPIED OR USED IN WHOLE OR IN PART AS THE BASIS FOR THE MANUFACTURE OR SALE OF ITEMS WITHOUT WRITTEN PERMISSION.
COPYRIGHT © 1977, DIGITAL EQUIPMENT CORPORATION"

REVISIONS		
CHK	CHANGE NO.	REV

M8553-0-CNT1 C
W. BRUCKERT

digital

DRN. J. Toomey DATE 23-FEB-77
CHKD. DATE 6/22/77
CNT1EE.DRW[4,614] 08-FEB-77 16:54
FIRST USED ON OPTION/MODEL: KL10
ENG. DATE 23-FEB-77
BOARD LOCATION:
SHEET 1 OF 1
NEXT HIGHER ASSEMBLY: B-DD-M8553-0

TITLE: DTE20 CONTROL LOGIC

SIZE	CODE	NUMBER	REV.
D	CS	M8553-0-CNT1	C

442

M/R

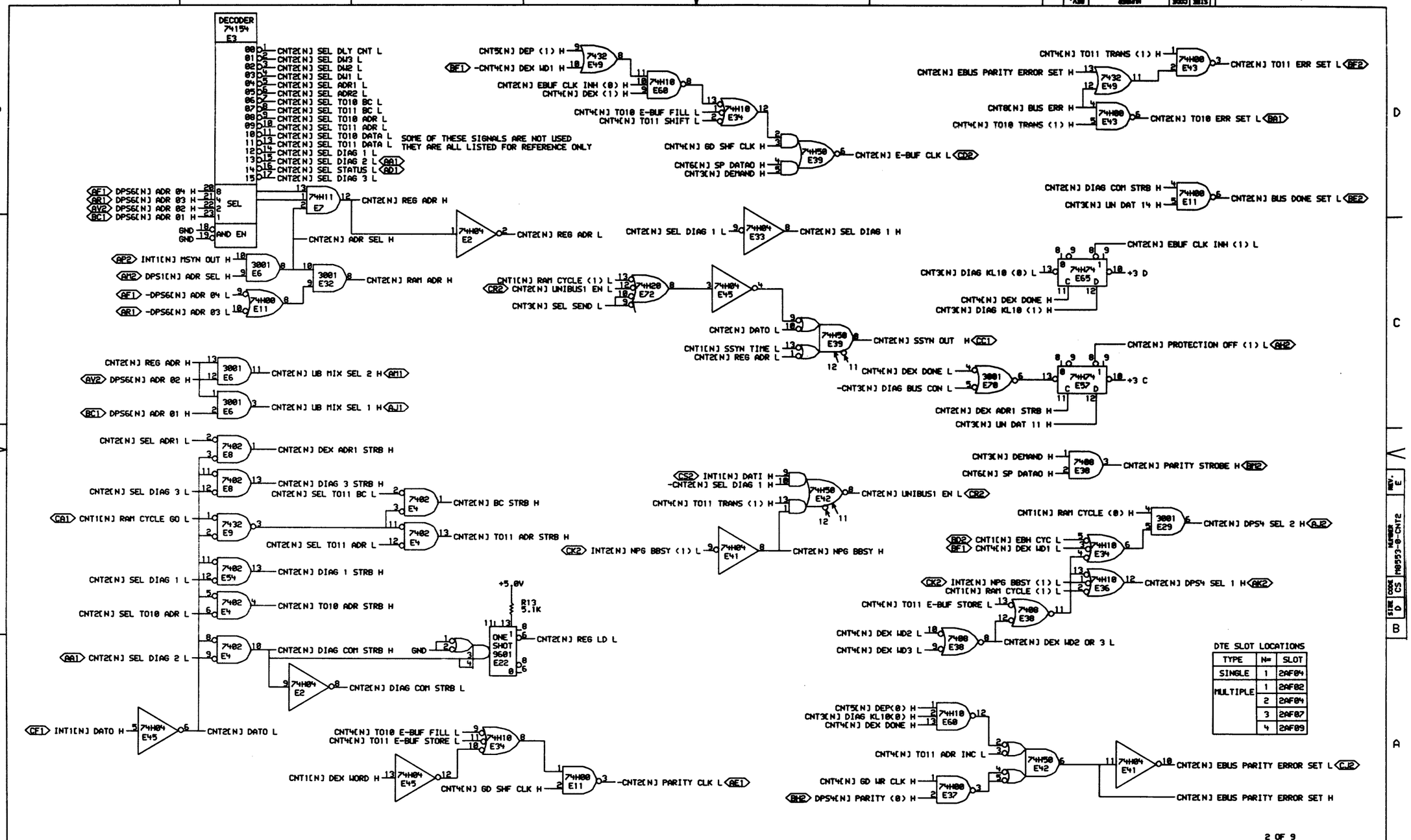

"THIS DRAWING AND SPECIFICATIONS, HEREIN, ARE THE PROPERTY OF DIGITAL EQUIPMENT CORPORATION AND SHALL NOT BE REPRODUCED OR COPIED OR USED IN WHOLE OR IN PART AS THE BASIS FOR THE MANUFACTURE OR SALE OF ITEMS WITHOUT WRITTEN PERMISSION. COPYRIGHT © 1977, DIGITAL EQUIPMENT CORPORATION"

REVISIONS		
CHK	CHANGE NO.	REV
—	M8553-00008	E
	W. BRICKETT	

digital

DRN. M. Zamby DATE 07-JUN-77 ENG. DATE
CHK. M. Walker DATE 3/7/77 BOARD LOCATION: SHEET 1 OF 1
CNT2EE.DRUK4,614 07-JUN-77 06:30 NEXT HIGHER ASSEMBLY:
FIRST USED ON OPTION/MODEL: KL10 B-DD-M8553-0

TITLE: DTE20 CONTROL LOGIC

SIZE	CODE	NUMBER	REV.
D	CS	M8553-0-CNT2	E

443

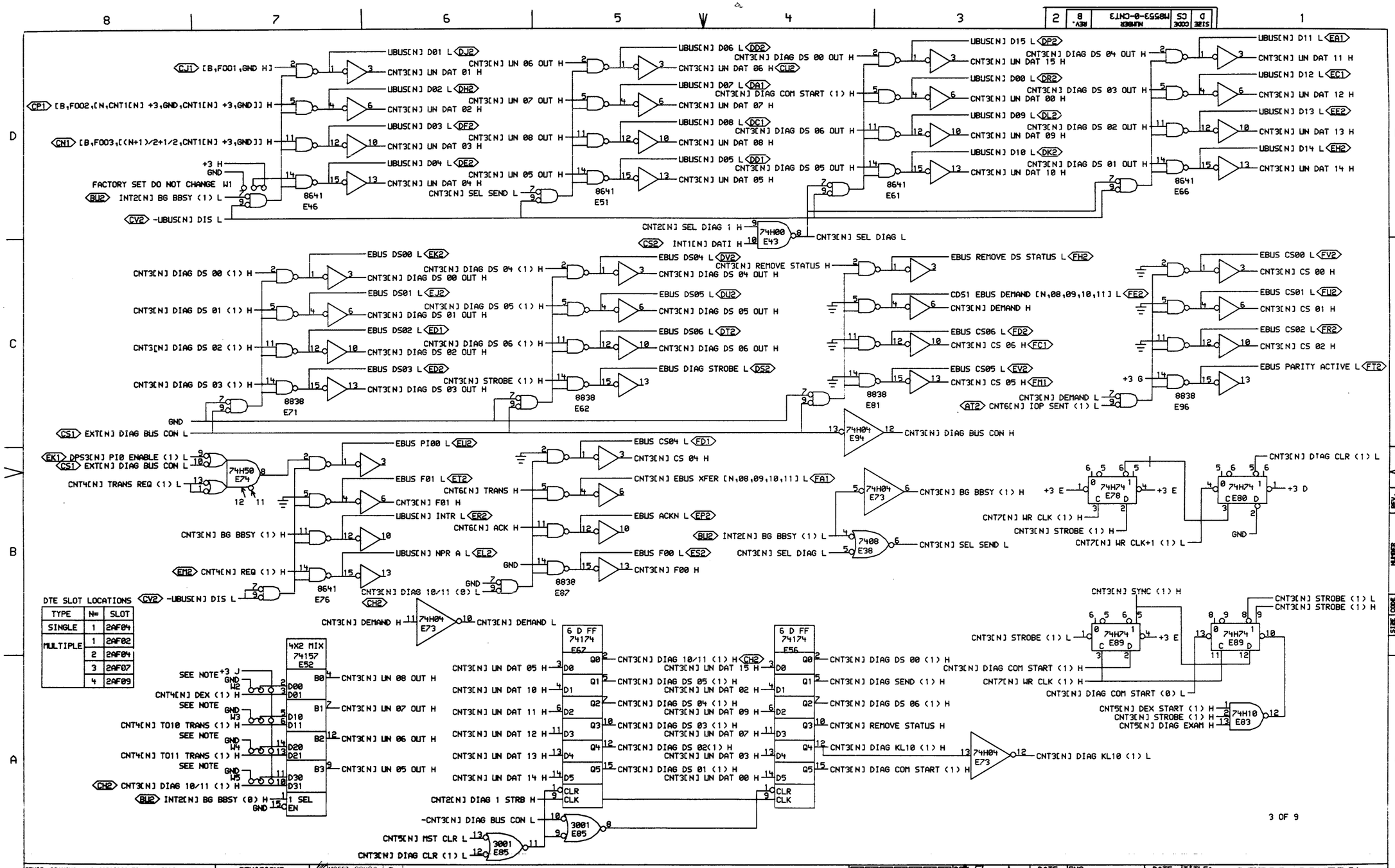

DTE SLOT LOCATIONS

TYPE	N=	SLOT
SINGLE	1	2AF04
MULTIPLE	1	2AF02
	2	2AF04
	3	2AF07
	4	2AF09

"THIS DRAWING AND SPECIFICATIONS, HEREIN, ARE THE PROPERTY OF DIGITAL EQUIPMENT CORPORATION AND SHALL NOT BE REPRODUCED OR COPIED OR USED IN WHOLE OR IN PART AS THE BASIS FOR THE MANUFACTURE OR SALE OF ITEMS WITHOUT WRITTEN PERMISSION. COPYRIGHT © 1977, DIGITAL EQUIPMENT CORPORATION"

REVISIONS		
CHK	CHANGE NO.	REV

M8553-00008 B
W. BRUCKERT

digital

DRN. DATE 10-FEB-77 ENG. DATE 23-FEB-77
CHK. DATE 2/11/77 BOARD LOCATION: SHEET 1 OF 1
CNT3EE.DRW[4,614] 10-FEB-77 10:57 NEXT HIGHER ASSEMBLY:
FIRST USED ON OPTION/MODEL: KL10 B-DD-M8553-0

TITLE: DTE20 CONTROL LOGIC

SIZE	CODE	NUMBER	REV.
D	CS	M8553-0-CNT3	B

444

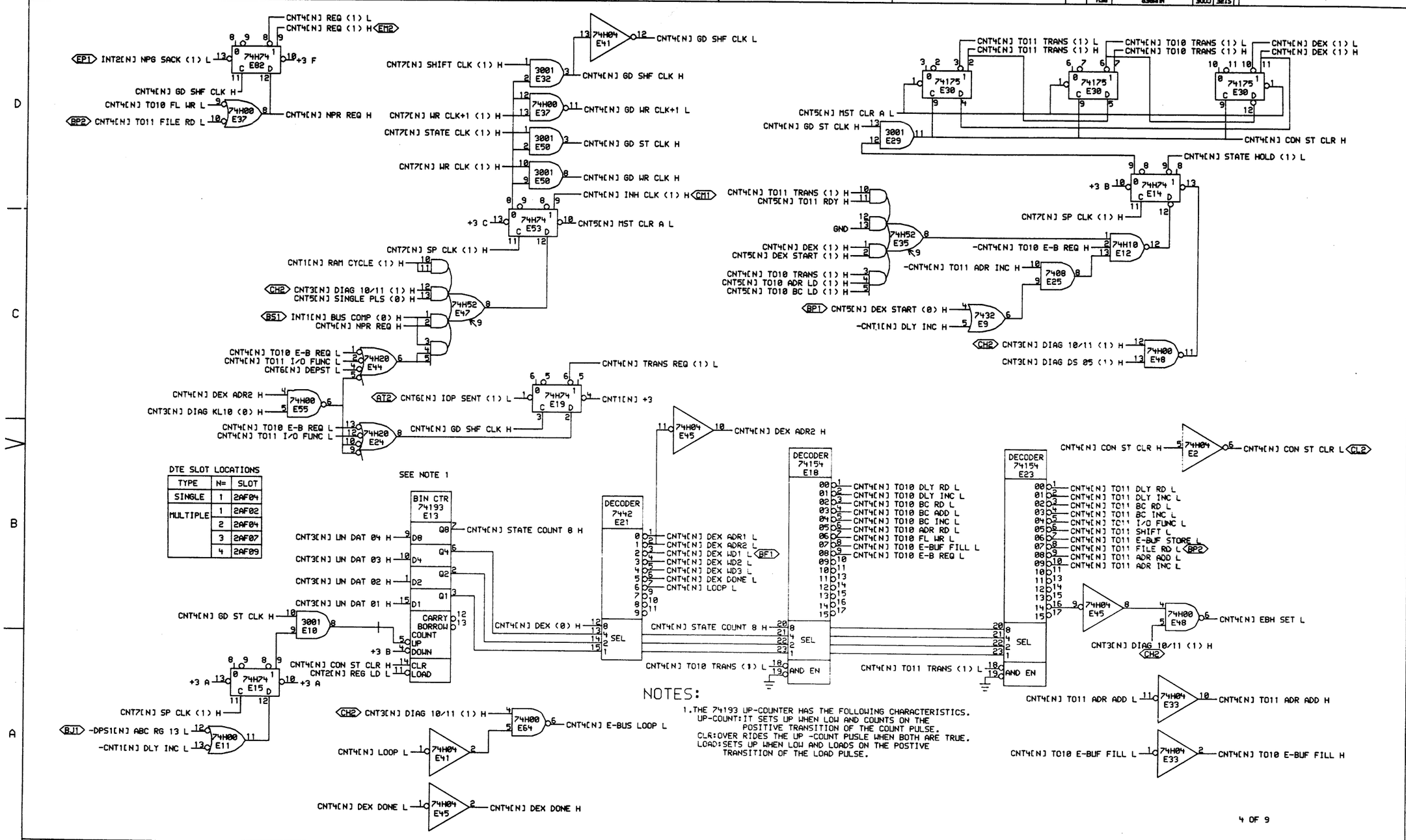

"THIS DRAWING AND SPECIFICATIONS, HEREIN, ARE THE PROPERTY OF DIGITAL EQUIPMENT CORPORATION AND SHALL NOT BE REPRODUCED OR COPIED OR USED IN WHOLE OR IN PART AS THE BASIS FOR THE MANUFACTURE OR SALE OF ITEMS WITHOUT WRITTEN PERMISSION. COPYRIGHT © 1977, DIGITAL EQUIPMENT CORPORATION"

REVISIONS		
CHK	CHANGE NO.	REV

M8553-0-CNT4 E
W. BRUCKERT

digital

DRN. L. Toomey
CHK'D. Fabiano
DATE 14-FEB-77
DATE 2/4/77
ENG. W. Bruckert
DATE 23FEB77
BOARD LOCATION:
SHEET 1 OF 1
CNT4EE.DRW[4,614] 14-FEB-77 09:29
NEXT HIGHER ASSEMBLY: B-DD-M8553-0
FIRST USED ON OPTION/MODEL: KL10

TITLE: DTE20 CONTROL LOGIC

SIZE	CODE	NUMBER	REV.
D	CS	M8553-0-CNT4	E

445

MR

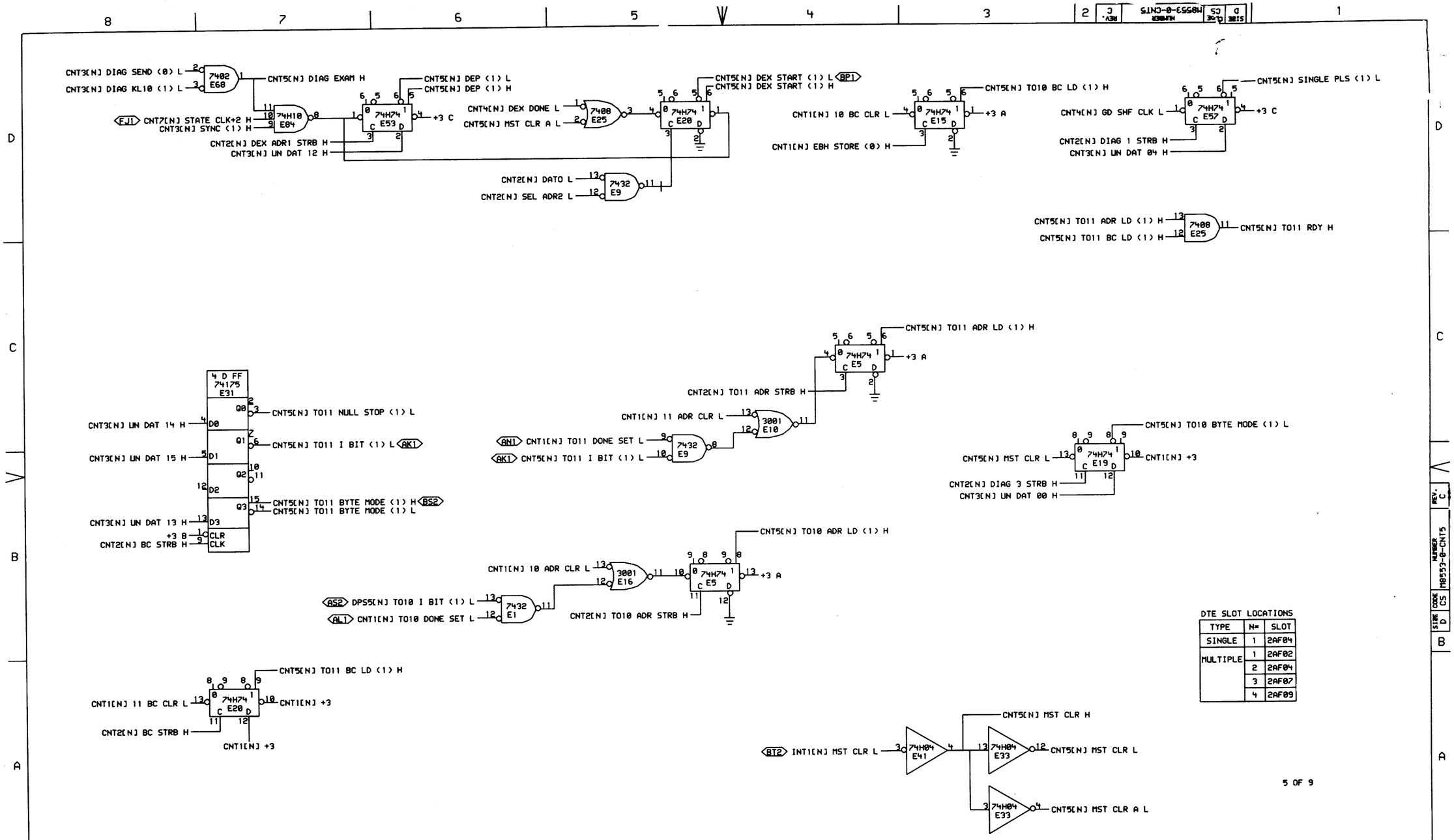

DTE SLOT LOCATIONS

TYPE	N=	SLOT
SINGLE	1	2AF04
MULTIPLE	1	2AF02
	2	2AF04
	3	2AF07
	4	2AF09

5 OF 9

"THIS DRAWING AND SPECIFICATIONS, HEREIN, ARE THE PROPERTY OF DIGITAL EQUIPMENT CORPORATION AND SHALL NOT BE REPRODUCED OR COPIED OR USED IN WHOLE OR IN PART AS THE BASIS FOR THE MANUFACTURE OR SALE OF ITEMS WITHOUT WRITTEN PERMISSION.
COPYRIGHT © 1977, DIGITAL EQUIPMENT CORPORATION"

REVISIONS		
CHK	CHANGE NO.	REV

M8553-00008 C
W. BRUCKERT

CNT5EE.DRW[4,6143] 09-FEB-77 13:40
FIRST USED ON OPTION/MODEL: KL10

DRN. DATE 10-FEB-77 ENG. DATE 23FEB77
CHK DATE 2/11/77
BOARD LOCATION:
SHEET 1 OF 1
NEXT HIGHER ASSEMBLY: B-DD-M8553-0

TITLE: DTE20 CONTROL LOGIC

SIZE	CODE	NUMBER	REV.
D	CS	M8553-0-CNT5	C

440

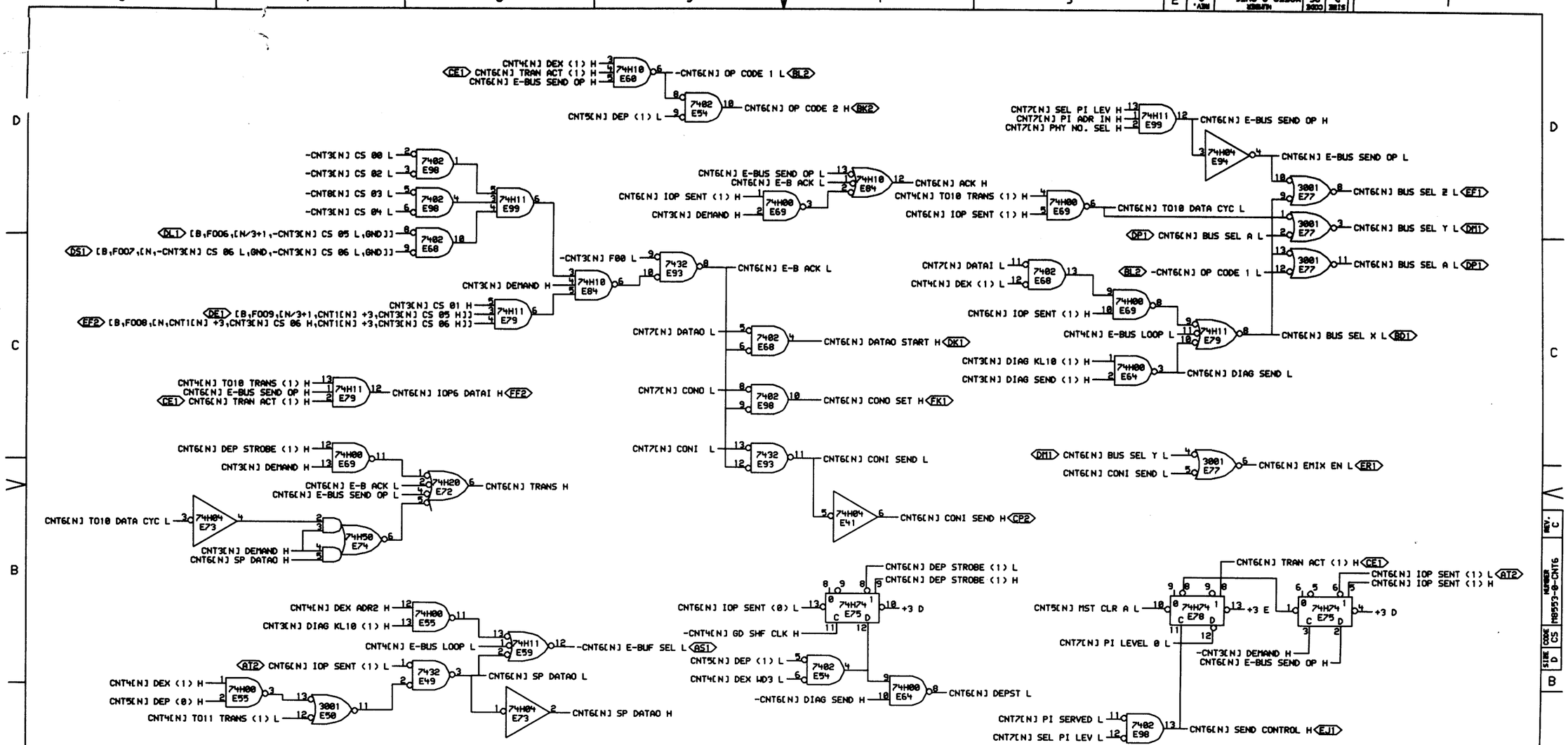

DTE SLOT LOCATIONS

TYPE	N=	SLOT
SINGLE	1	2AF04
MULTIPLE	1	2AF02
	2	2AF04
	3	2AF07
	4	2AF09

6 OF 9

"THIS DRAWING AND SPECIFICATIONS, HEREIN, ARE THE PROPERTY OF DIGITAL EQUIPMENT CORPORATION AND SHALL NOT BE REPRODUCED OR COPIED OR USED IN WHOLE OR IN PART AS THE BASIS FOR THE MANUFACTURE OR SALE OF ITEMS WITHOUT WRITTEN PERMISSION. COPYRIGHT © 1977, DIGITAL EQUIPMENT CORPORATION"

REVISIONS		
CHK	CHANGE NO.	REV

M8553 - 00008 C
W. BRUCKERT

digital

DRN. J. Loosley DATE 10-FEB-77
CHK'D. Wilkerson DATE 11/77
ENG. W. Bruckert DATE 23 FEB 77
BOARD LOCATION:
SHEET 1 OF 1
CNT6EE.DRW[4,614] 10-FEB-77 13:41
NEXT HIGHER ASSEMBLY: B-DD-M8553-0
FIRST USED ON OPTION/MODEL: KL10

TITLE: DTE20 CONTROL LOGIC

SIZE	CODE	NUMBER	REV.
D	CS	M8553-0-CNT6	C

447

MR

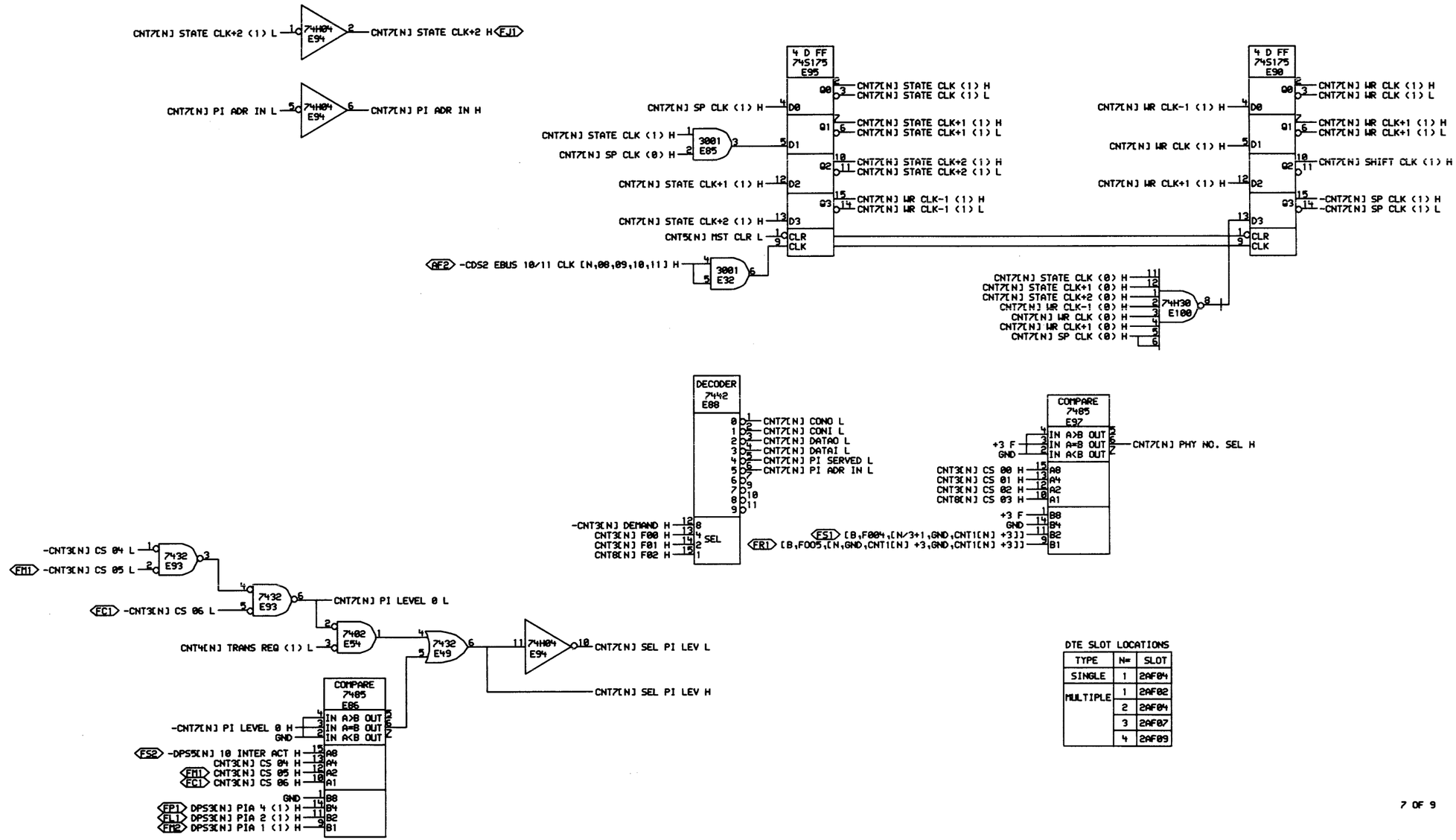

DTE SLOT LOCATIONS

TYPE	N=	SLOT
SINGLE	1	2AF04
MULTIPLE	1	2AF02
	2	2AF04
	3	2AF07
	4	2AF09

7 OF 9

"THIS DRAWING AND SPECIFICATIONS, HEREIN, ARE THE PROPERTY OF DIGITAL EQUIPMENT CORPORATION AND SHALL NOT BE REPRODUCED OR COPIED OR USED IN WHOLE OR IN PART AS THE BASIS FOR THE MANUFACTURE OR SALE OF ITEMS WITHOUT WRITTEN PERMISSION.
COPYRIGHT © 1977, DIGITAL EQUIPMENT CORPORATION"

REVISIONS		
CHK	CHANGE NO.	REV

M8553-00008 B
W. BRUCKERT
12-FEB-77

digital

DRN. L. Loomis DATE 10-FEB-77
CHK'D. DATE 23-FEB-77
ENG. W. Bruckert DATE 23-FEB-77
BOARD LOCATION:
SHEET 1 OF 1
CNT7EE.DRU[4,614] 09-FEB-77 13:41
NEXT HIGHER ASSEMBLY: B-DD-M8553-0
FIRST USED ON OPTION/MODEL: KL10

TITLE: DTE20 CONTROL LOGIC

SIZE	CODE	NUMBER	REV.
D	CS	M8553-0-CNT7	B

448

MR

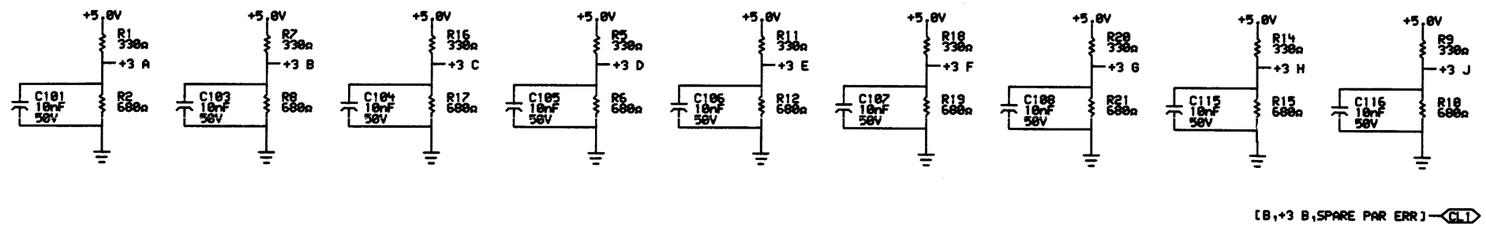

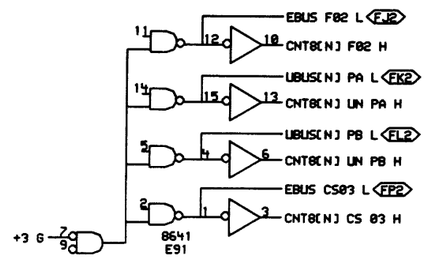

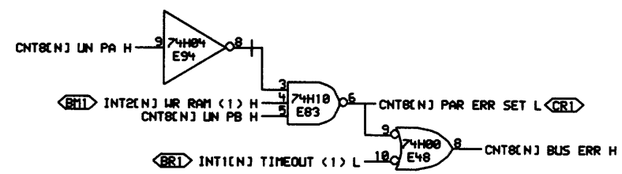

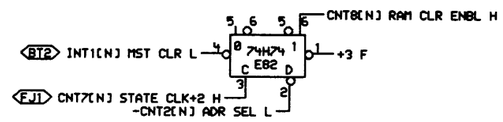

DTE SLOT LOCATIONS

TYPE	N=	SLOT
SINGLE	1	2AF04
MULTIPLE	1	2AF02
	2	2AF04
	3	2AF07
	4	2AF09

8 OF 9

"THIS DRAWING AND SPECIFICATIONS, HEREIN, ARE THE PROPERTY OF DIGITAL EQUIPMENT CORPORATION AND SHALL NOT BE REPRODUCED OR COPIED OR USED IN WHOLE OR IN PART AS THE BASIS FOR THE MANUFACTURE OR SALE OF ITEMS WITHOUT WRITTEN PERMISSION.
COPYRIGHT © 1977, DIGITAL EQUIPMENT CORPORATION"

REVISIONS		
CHK	CHANGE NO.	REV

M8553-0-0009 D
W. BRUCKERT

digital

DRN. 10-FEB-77 | ENG. W. Bruckert | DATE 23 FEB 77
CHK'D. 24 FEB 77 | DATE | BOARD LOCATION: SHEET 1 OF 1
CNT8EE.DRW[4,614] 09-FEB-77 13:41 | NEXT HIGHER ASSEMBLY: B-DD-M8553-0
FIRST USED ON OPTION/MODEL: KL10

TITLE: DTE20 CONTROL LOGIC

SIZE	CODE	NUMBER	REV.
D	CS	M8553-0-CNT8	D

449

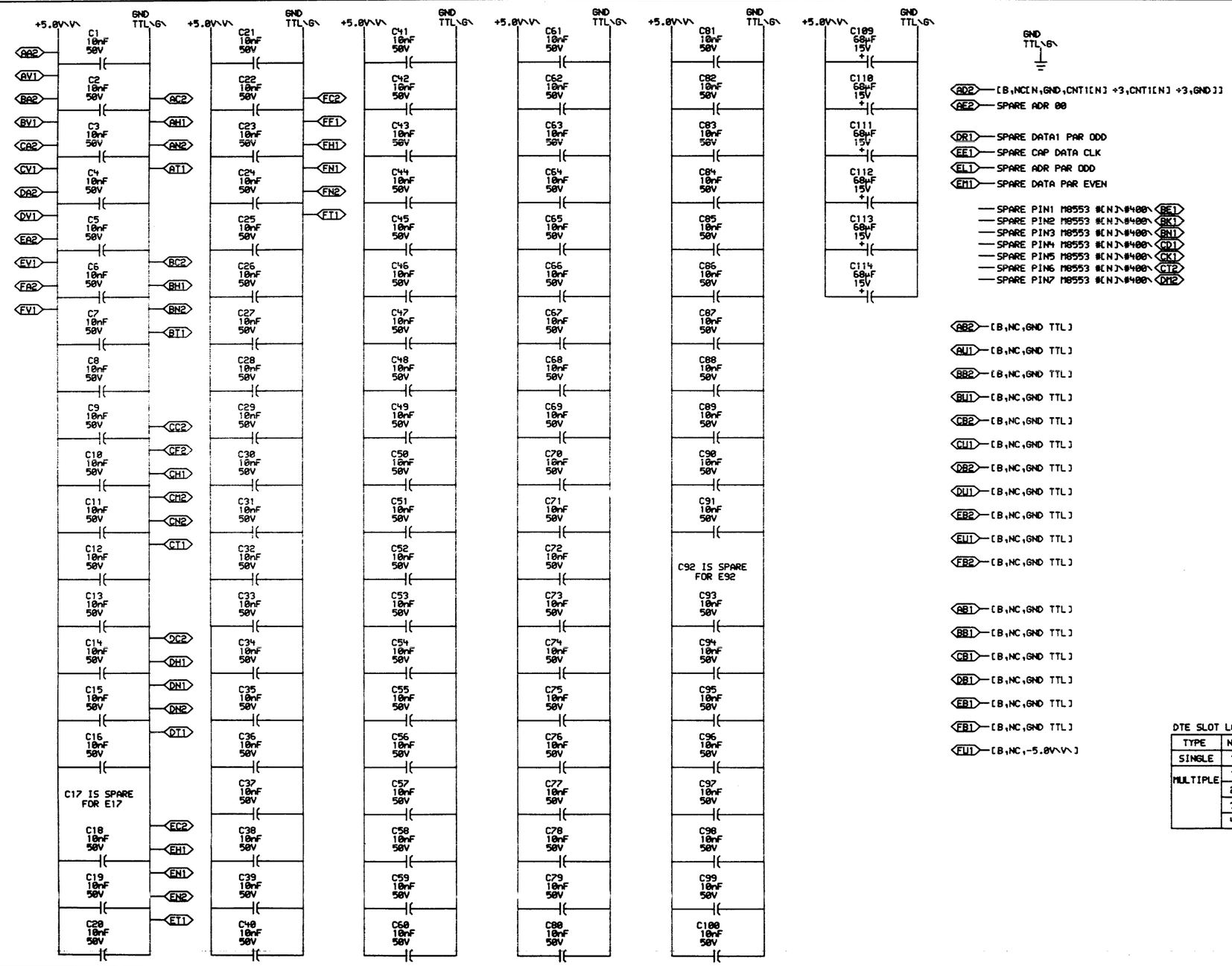

DTE SLOT LOCATIONS

TYPE	N=	SLOT
SINGLE	1	2AF04
MULTIPLE	1	2AF02
	2	2AF04
	3	2AF07
	4	2AF09

9 OF 9

"THIS DRAWING AND SPECIFICATIONS, HEREIN, ARE THE PROPERTY OF DIGITAL EQUIPMENT CORPORATION AND SHALL NOT BE REPRODUCED OR COPIED OR USED IN WHOLE OR IN PART AS THE BASIS FOR THE MANUFACTURE OR SALE OF ITEMS WITHOUT WRITTEN PERMISSION.
COPYRIGHT © 1977, DIGITAL EQUIPMENT CORPORATION"

REVISIONS

CHK	CHANGE NO.	REV
—	M8553-00009	C

W. BERKREY

DRW. 07-JUN-77 ENG. DATE
CHK DATE 07-JUN-77 BOARD LOCATION: SHEET 1 OF 1
CNTSEE.DRUC4,614] 07-JUN-77 06:34 NEXT HIGHER ASSEMBLY:
FIRST USED ON OPTION/MODEL: KL10 B-DD-M8553-0

TITLE: DTE20 CNTRL LOGIC PWR, CAP, AND GND

SIZE	CODE	NUMBER	REV.
D	CS	M8553-0-CNT9	C

450

MR

REVISION CONTROL SHEET

CUSTOMER PRINT SET	MFG SET	DRAWING NO	NO OF SHT	DESCRIPTION	OPTION NO/FILE DATE	REVISIONS A	B	C	D	E	F
				MODULE REVISION							
		D-UA-M8554-0-0	5	11/10 BUS DATA CONTROL		-	A	B	C	D	E
		D-CS-M8554-0-INT1	1	DTE20 UNIBUS INTERRUPT CONTROL		-	A	B	C	D	E
		D-CS-M8554-0-INT2	1	UNIBUS INTERRUPT CONTROL		-	—	A	B	B	C
		D-CS-M8554-0-INT3	1	UNIBUS INTERRUPT POWER AND GND		-	A	B	B	B	C
		K-CO-M8554-0-4	1	11/10 BUS DATA CONTROL		B	B	B	B	B	B
		D-AH-M8554-0-5	4	11/10 BUS DATA CONTROL		A	A	B	B	B	B
		B-MH-M8554-0-6	1	MODULE ECO HISTORY		-	A	B	C	D	E
		5010513	-	ETCH CIRCUIT BOARD		B	B	B	B	B	B
		P00-M8554-00		PROCESS SHEET (REF ONLY)		-	—	—	—	—	—

CUSTOMER PRINT SET CODES
X = PRINT OF DOCUMENT INCLUDED IN PRINT SET
C = INCLUDES ALL PRINTS INDICATED ON DOCUMENT
S = CONFIDENTIAL AUTHORIZED SIGNATURE REQUIRED

ECO NO	ORIG.	00001	00002 HD 6-11-75	00003	00004	MR005

TITLE	SHEET	SIZE	CODE	NUMBER	REV
11/10 BUS DATA CONTROL	2 OF 2	B	DD	M8554-0	E

451

MR

THIS DRAWING AND SPECIFICATIONS, HEREIN, ARE THE PROPERTY OF DIGITAL EQUIPMENT CORPORATION AND SHALL NOT BE REPRODUCED OR COPIED OR USED IN WHOLE OR IN PART AS THE BASIS FOR THE MANUFACTURE OR SALE OF ITEMS WITHOUT WRITTEN PERMISSION.
COPYRIGHT © 1974, DIGITAL EQUIPMENT CORPORATION

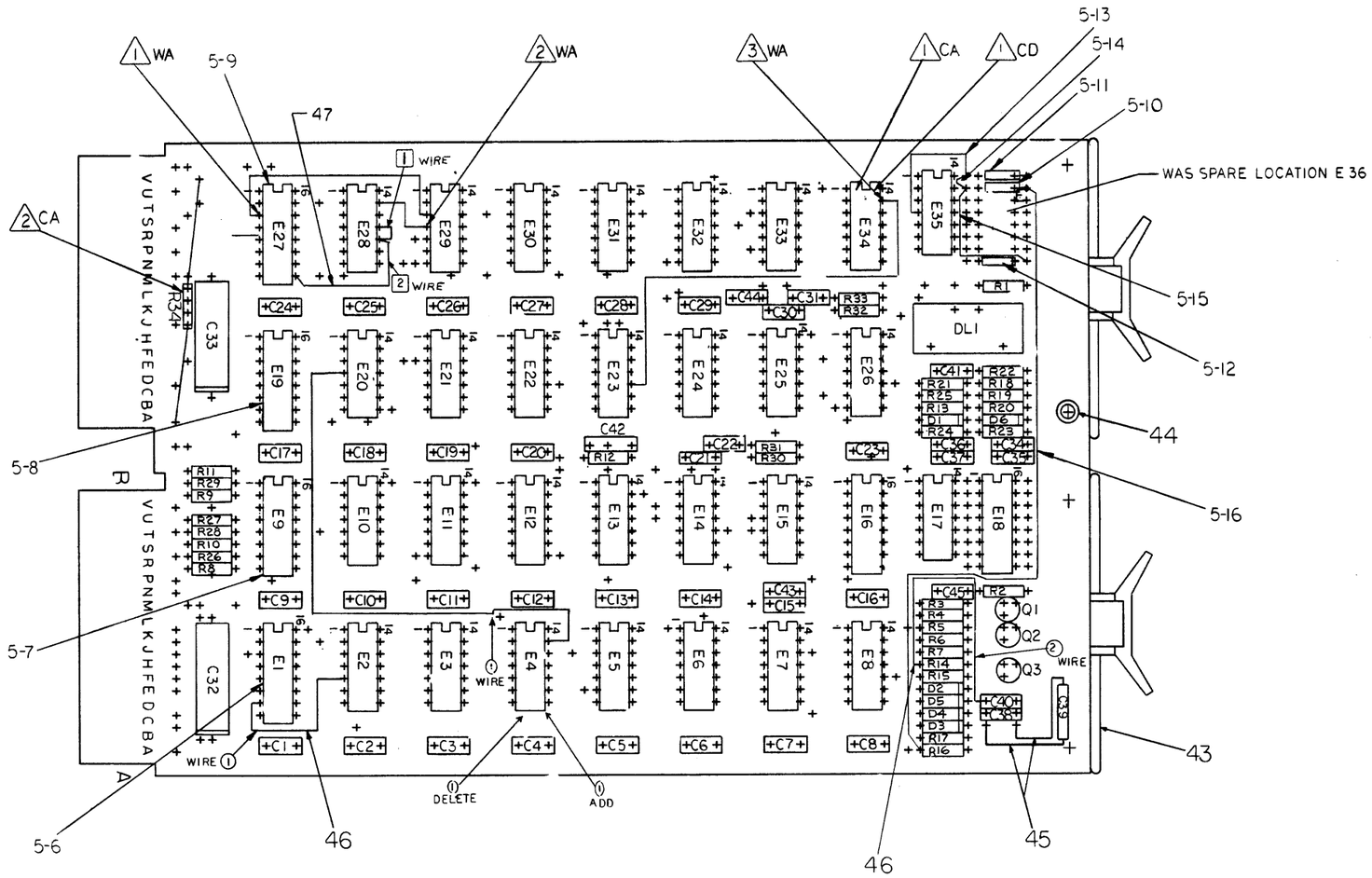

REVISIONS		
CHK	CHANGE NO	REV

TITLE	SIZE	CODE	NUMBER	REV.
11/10 BUS DATA CONTROL	D	UA	M8554-0-0	E
SCALE 2/1	SHEET 2 OF 5	DIST.		

452

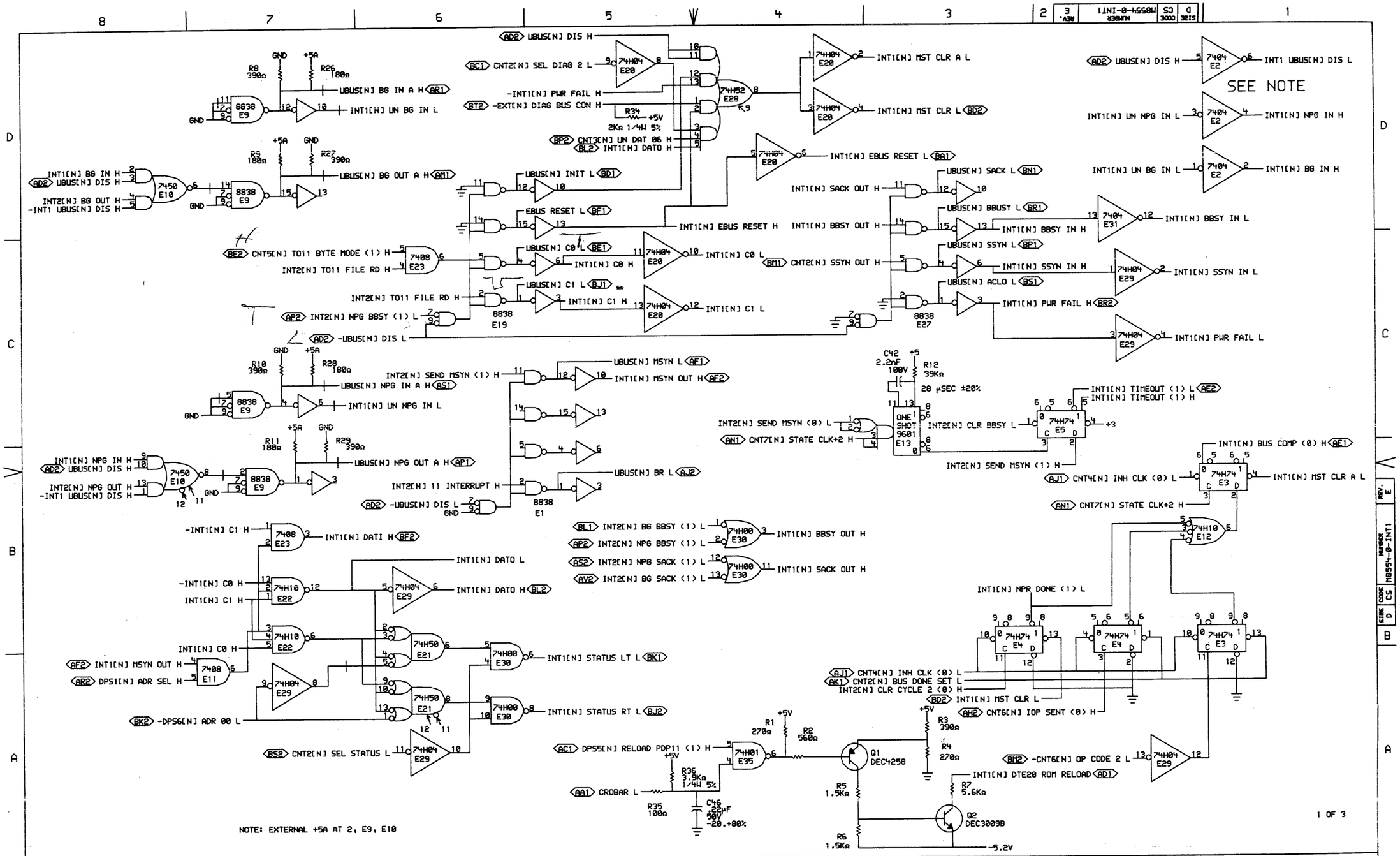

"THIS DRAWING AND SPECIFICATIONS, HEREIN, ARE THE PROPERTY OF DIGITAL EQUIPMENT CORPORATION AND SHALL NOT BE REPRODUCED OR COPIED OR USED IN WHOLE OR IN PART AS THE BASIS FOR THE MANUFACTURE OR SALE OF ITEMS WITHOUT WRITTEN PERMISSION. COPYRIGHT © 1977, DIGITAL EQUIPMENT CORPORATION"

REVISIONS		
CHK	CHANGE NO.	REV
	M8554-MR005	E

digital

DRW.	DATE 04-NOV-77	ENG.	DATE 4-NOV-77
CHKD.	DATE 2-NOV-77	BOARD LOCATION: SHEET 1 OF 1	
INT1EX.DRW[4,615] 02-NOV-77 15:02		NEXT HIGHER ASSEMBLY:	
FIRST USED ON OPTION/MODEL: KL10		B-DD-M8554-0	

TITLE: DTE20 UNIBUS INTERRUPT CONTROL

SIZE	CODE	NUMBER	REV
D	CS	M8554-0-INT1	E

453

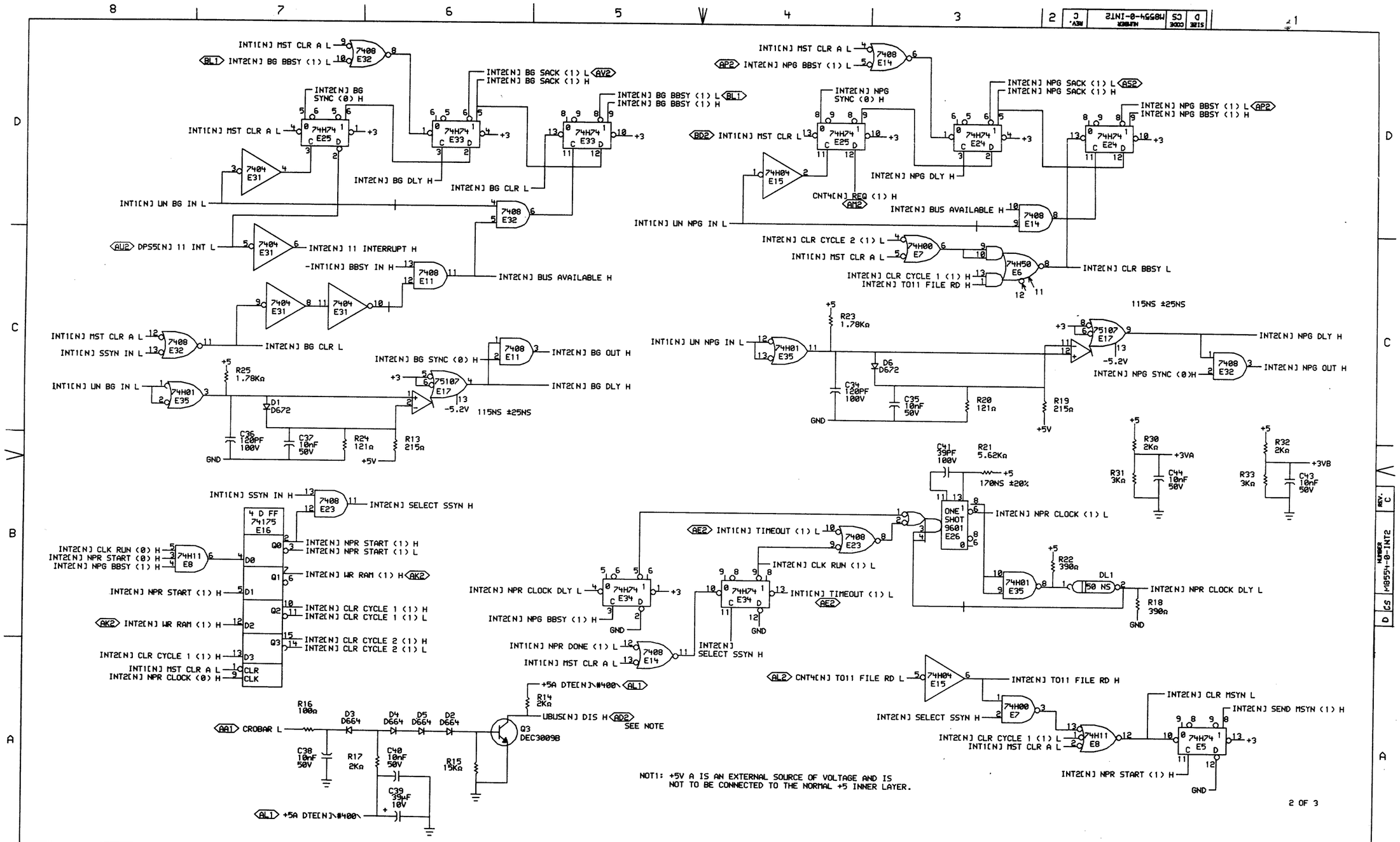

"THIS DRAWING AND SPECIFICATIONS, HEREIN, ARE THE PROPERTY OF DIGITAL EQUIPMENT CORPORATION AND SHALL NOT BE REPRODUCED OR COPIED OR USED IN WHOLE OR IN PART AS THE BASIS FOR THE MANUFACTURE OR SALE OF ITEMS WITHOUT WRITTEN PERMISSION. COPYRIGHT © 1978 DIGITAL EQUIPMENT CORPORATION"

REVISIONS		
CHK	CHANGE NO.	REV
	M8554 MR005	C
	L. BALES	

digital

DRW.	DATE 01-FEB-78	ENG.	DATE 2/2/78
CHK	DATE	BOARD LOCATION:	
		SHEET 1 OF 1	
INT2EX.DRW[4,615] 08-NOV-77 09:33		NEXT HIGHER ASSEMBLY:	
FIRST USED ON OPTION/MODEL: KL10		B-DD-M8554-0	

TITLE: UNIBUS INTERRUPT CONTROL

SIZE	CODE	NUMBER	REV.
D	CS	M8554-0-INT2	C

454

CALVO, MODULE:<M8554>INT2EX.DPL.3, SCALE 2, "D" RELEASE BOX
PLTSPOOL 14:56[4,414] 01-FEB-78 17:15

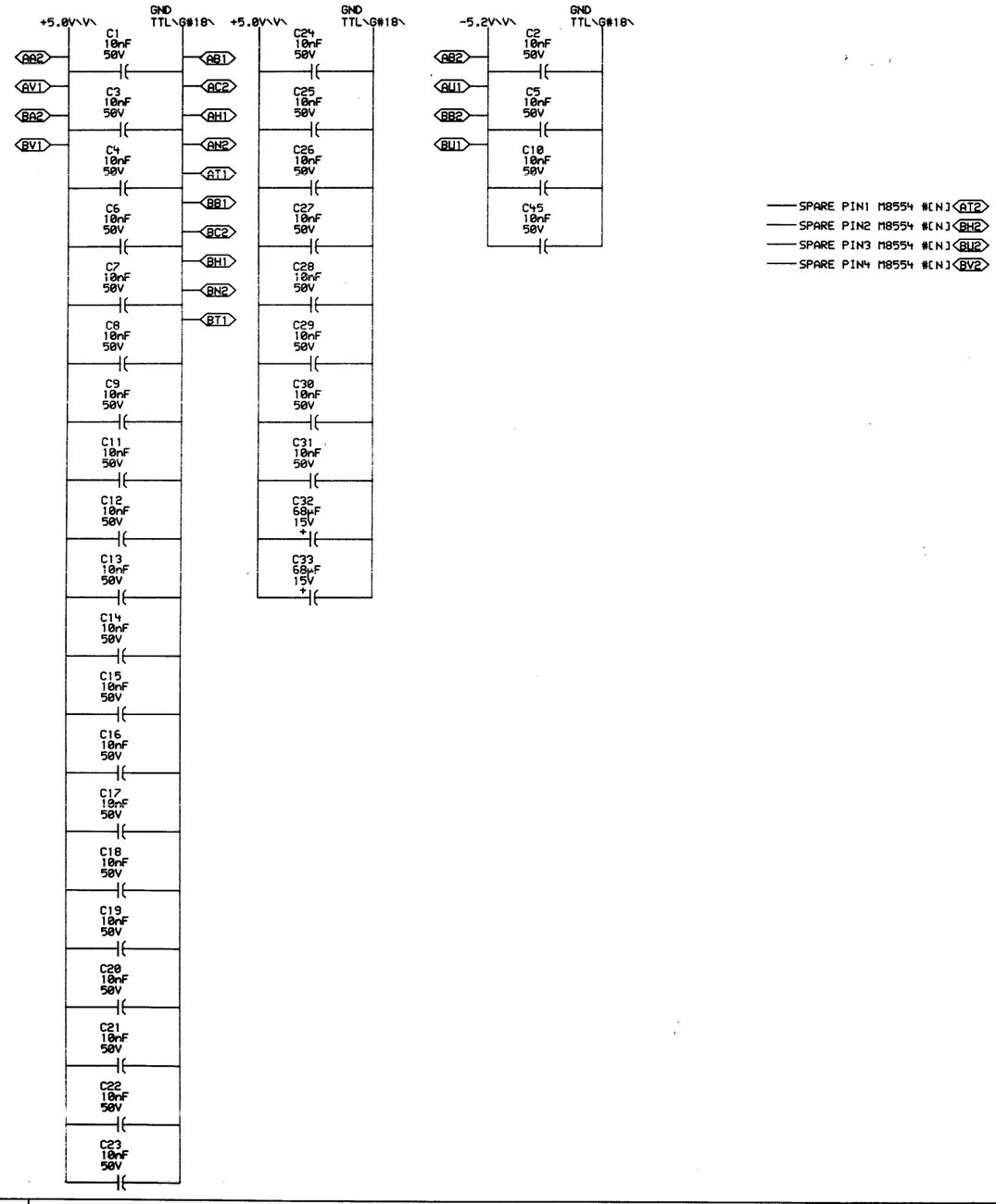

3 OF 3

"THIS DRAWING AND SPECIFICATIONS, HEREIN, ARE THE PROPERTY OF DIGITAL EQUIPMENT CORPORATION AND SHALL NOT BE REPRODUCED OR COPIED OR USED IN WHOLE OR IN PART AS THE BASIS FOR THE MANUFACTURE OR SALE OF ITEMS WITHOUT WRITTEN PERMISSION.
COPYRIGHT © 1977, DIGITAL EQUIPMENT CORPORATION"

REVISIONS		
CHK	CHANGE NO.	REV
	M8554-MR005	C
	L.BALES	
	1/26/78	

digital

DES. L. Loosley DATE 31-OCT-77
CHK'D. DATE
ENG. William Bruckert DATE 4-NOV-77
BOARD LOCATION:
SHEET 1 OF 1
INT3EX.DRWE4,615] 31-OCT-77 11:39
NEXT HIGHER ASSEMBLY: B-DD-M8554-0
FIRST USED ON OPTION/MODEL: KL10

TITLE: UNIBUS INTERRUPT POWER AND GROUND

SIZE	CODE	NUMBER	REV.
D	CS	M8554-0-INT3	C

455

REVISION CONTROL SHEET

CUSTOMER PRINT SET	MFG SET	DRAWING NO	NO OF SHT	DESCRIPTION	OPTION NO/FILE DATE	REVISIONS
				MODULE REVISION		A
		D-UA-M8559-Ø-Ø	1	I/O BOX CLOCK DISTRIBUTION		
		D-CS-M8559-Ø-CDS1	1	I/O BOX CLOCK DISTRIBUTION		-
		D-CS-M8559-Ø-CDS2	1	I/O BOX CLOCK DISTRIBUTION		-
		D-CS-M8559-Ø-CDS3	1	I/O BOX CLOCK DISTRIBUTION		-
		K-CO-M8559-Ø-4	1	I/O BOX CLOCK DISTRIBUTION (CALDEC DATA BASE)		B
		D-AH-M8559-Ø-5	5	I/O BOX CLOCK DISTRIBUTION		A
		B-MH-M8559-Ø-6	1	I/O BOX CLOCK DISTRIBUTION		-
		5010650	-	ETCH CIRCUIT BOARD		B
		P00-M8559-00		PROCESS SHEET (REF ONLY)		-

CUSTOMER PRINT SET CODES
X = PRINT OF DOCUMENT INCLUDED IN PRINT SET
C = INCLUDES ALL PRINTS INDICATED ON DOCUMENT
S = CONFIDENTIAL AUTHORIZED SIGNATURE REQUIRED

ECO NO
ORIG

TITLE		SIZE	CODE	NUMBER	REV
I/O BOX CLOCK DISTRIBUTION	SHEET 2 OF 2	B	DD	M8559-Ø	

456

"THIS DRAWING AND SPECIFICATIONS, HEREIN, ARE THE PROPERTY OF DIGITAL EQUIPMENT CORPORATION AND SHALL NOT BE REPRODUCED OR COPIED OR USED IN WHOLE OR IN PART AS THE BASIS FOR THE MANUFACTURE OR SALE OF ITEMS WITHOUT WRITTEN PERMISSION. COPYRIGHT © 1974 DIGITAL EQUIPMENT CORPORATION"

NOTES:

1. FOR DRAWING DIRECTORY REFER TO. B-DD-M9559-0
2. UNLESS OTHERWISE SPECIFIED THE FOLLOWING PIN NUMBERS APPLY

PACKAGE TYPE	VCC	GND
16 PIN DIP	16	8
14 PIN DIP	14	7

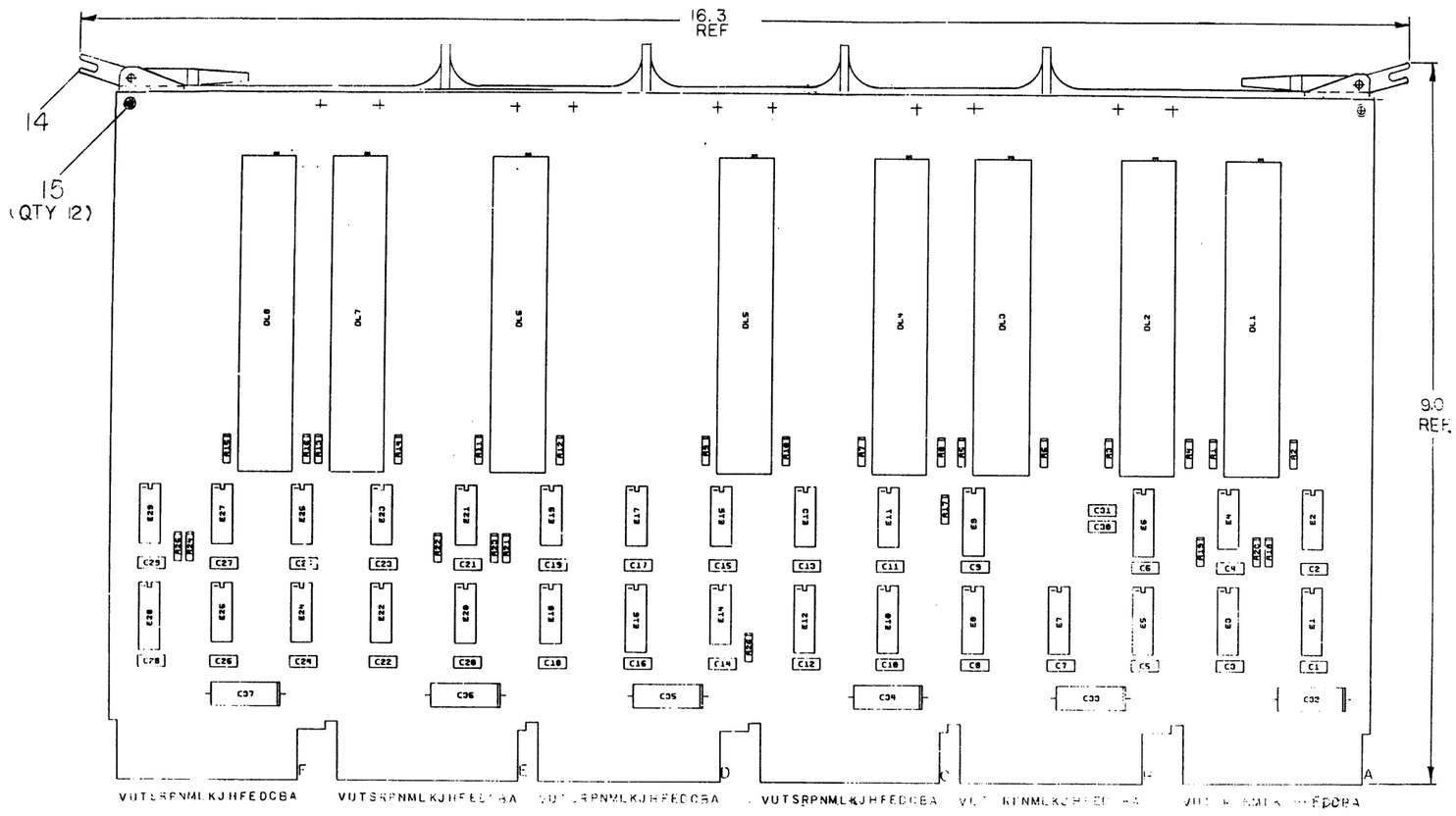

QTY	REF. DESIGNATION	DESCRIPTION	PART NO.	ITEM NO.
1		ETCHED CIRCUIT BOARD	5010650	1
6	C32 THRU C37	CAP. 68uf 10% 15V TANT.	1000082	2
31	C1 THRU C31	CAP. 10NF 20% 100V DISC	1001610-00	3
16	R1 THRU R16	RES. 300 5% ¼W	1301425	4
10	R17 THRU R26	RES. 39 5% ¼W	1302377	5
11	E1,E3,E5 THRU E10,E12,E16, E28	RES. PACK	1311003-1	6
8	DL1 THRU DL8	DELAY LINE 80NS	1610079	7
4	E2,E11,E15,E19	I.C. DEC 1074H40	1910469	8
1	E13	I.C. DEC 7402	1909004	9
4	E19,E20,E22,E24	I.C. DEC 1074H00	1910462	10
2	E14,E17	I.C. DEC 1074H30	1910468	11
3	E4,E21,E27	I.C. DEC 1074H11	1910465	12
4	E23,E25,E26,E29	I.C. DEC 7438	1911219	13
1		HANDLE ASSY.	1210711-2	14
12		EYELET, HANDLE	9006732	15
A R		#30 AWG WIRE WRAP WIRE WHITE	9105740-99	16

PARTS LIST

FIRST USED ON OPTION MODEL: KL10

ETCH BOARD REV.

IC TYPE	GND	+5V
GND AND 5V ARE USUALLY PIN 7 AND 14 RESPECTIVELY EXCEPTIONS ARE STATED ABOVE		

IC PIN LOCATIONS

CHANGE NO.	REV.

REVISIONS

DEC NO.	EIA NO.	DEC NO.	EIA NO.

SEMICONDUCTOR CONVERSION CHART

DRN. DATE
CHK'D. DATE 5/13/74
ENG. DATE 9/13/74
PROJ. ENG. DATE 9/13/74
PROD. DATE 9/13/74

NEXT HIGHER ASSY: B-DD-M8559-0

SCALE: NONE

SHEET 1 OF 1

digital

TITLE: I/O BOX CLOCK DISTRIBUTION

SIZE D | CODE UA | NUMBER M8559-0-0 | REV.

DIST.

SIZE D | CODE UA | NUMBER M8559-0-0 | REV. 0

451

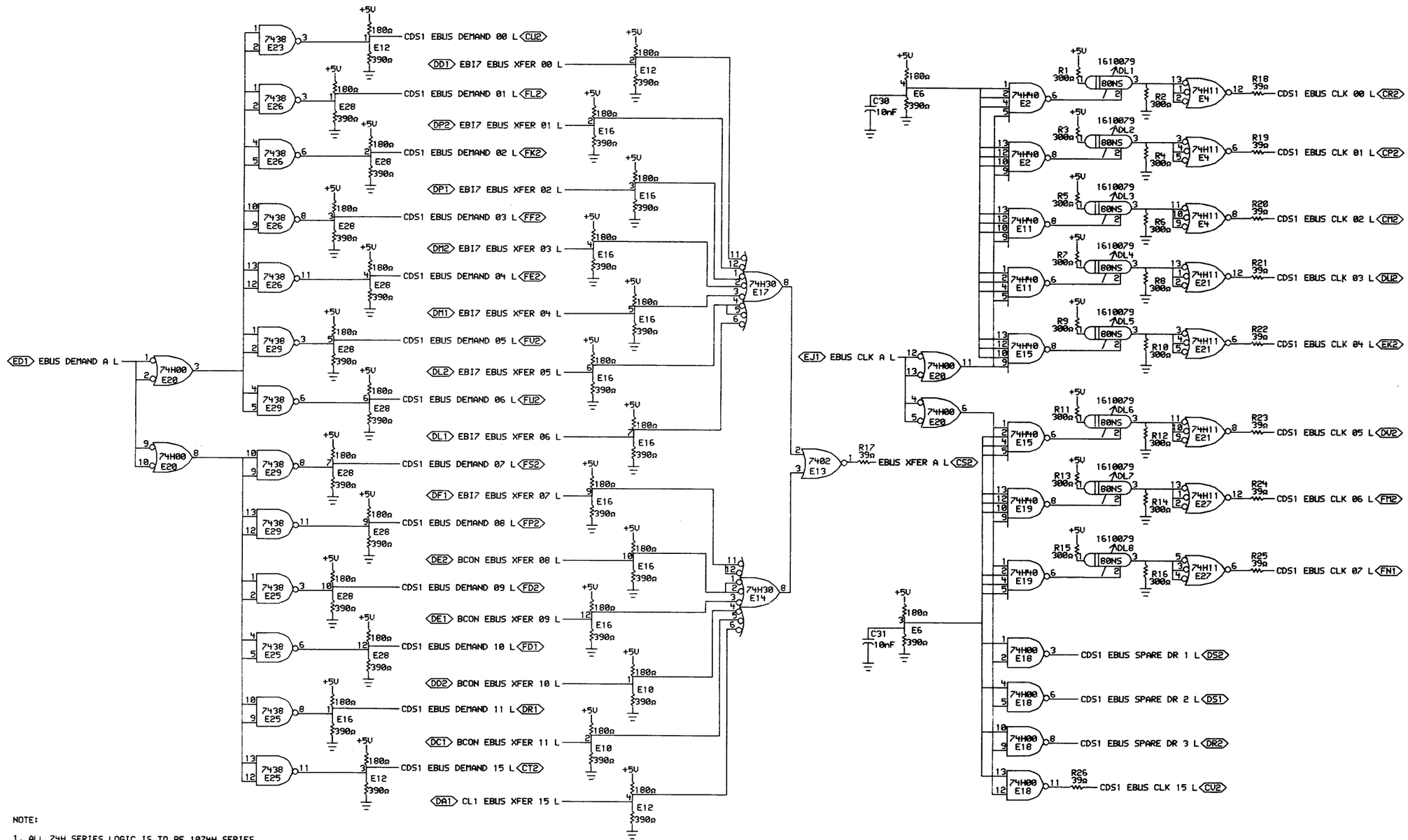

NOTE:

1. ALL 74H SERIES LOGIC IS TO BE 1074H SERIES
2. UNLESS OTHERWISE SPECIFIED THE FOLLOWING PIN NUMBERS APPLY
   PACKAGE TYPE VCC GND
   16 PIN DIP 16 8
   14 PIN DIP 14 7

"THIS DRAWING AND SPECIFICATIONS, HEREIN, ARE THE PROPERTY OF DIGITAL EQUIPMENT CORPORATION AND SHALL NOT BE REPRODUCED OR COPIED OR USED IN WHOLE OR IN PART AS THE BASIS FOR THE MANUFACTURE OR SALE OF ITEMS WITHOUT WRITTEN PERMISSION. COPYRIGHT © 1974, DIGITAL EQUIPMENT CORPORATION"

REVISIONS		
CHK	CHANGE NO.	REV

digital	DRN.	DATE	ENG.	DATE 9/13/74
	CHK'D	DATE	BOARD LOCATION: SHEET 1 OF 1	
CDS1EL10.426J	10-SEP-74 13:05	NEXT HIGHER ASSEMBLY:		
FIRST USED ON OPTION/MODEL: KL10		B-DD-M8559-0		

TITLE: I/O BOX CLOCK DISTRIBUTION

SIZE	CODE	NUMBER	REV.
D	CS	M8559-0-CDS1	

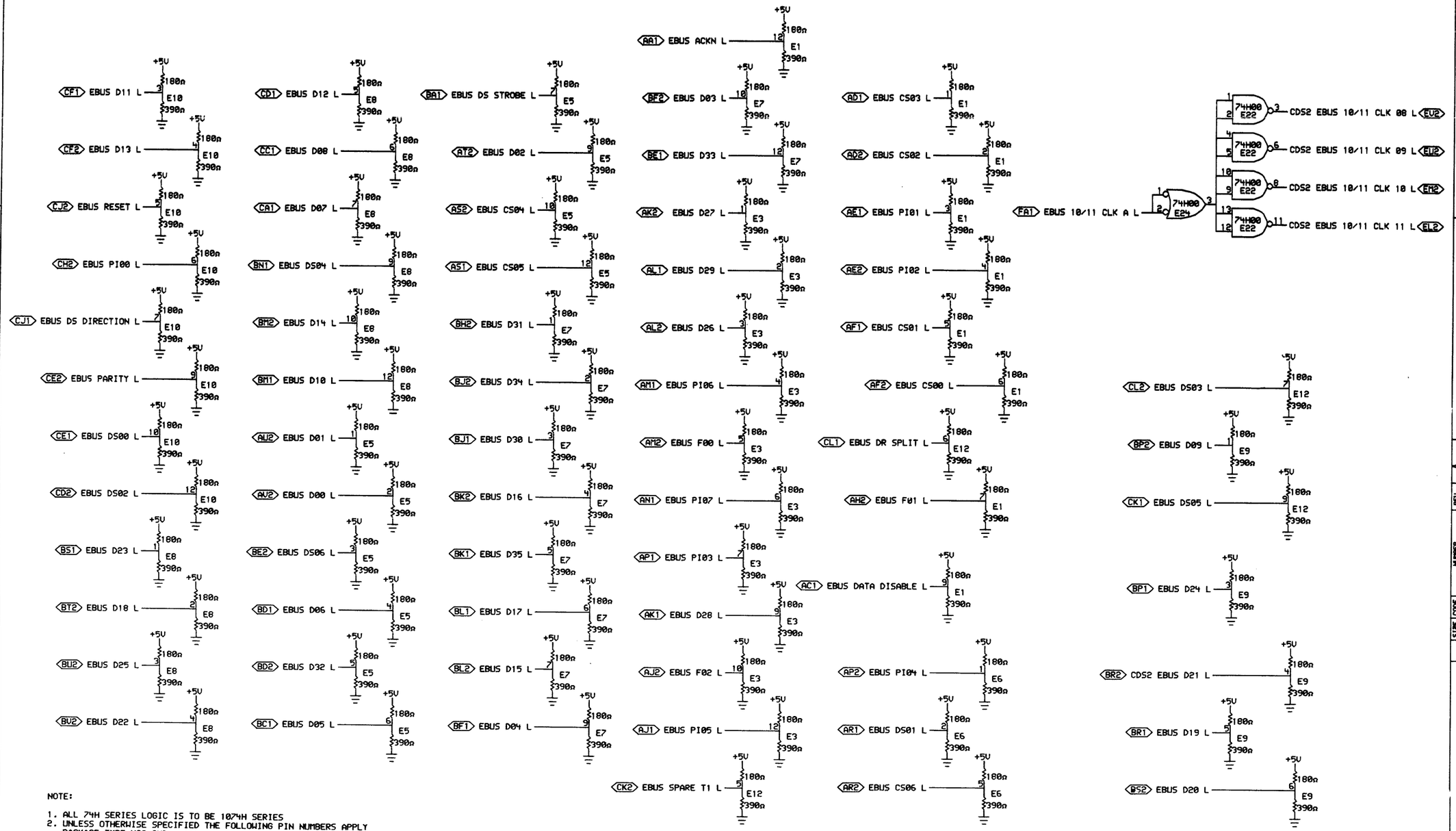

NOTE:

1. ALL 74H SERIES LOGIC IS TO BE 1074H SERIES
2. UNLESS OTHERWISE SPECIFIED THE FOLLOWING PIN NUMBERS APPLY

PACKAGE TYPE	VCC	GND
16 PIN DIP	16	8
14 PIN DIP	14	7

"THIS DRAWING AND SPECIFICATIONS, HEREIN, ARE THE PROPERTY OF DIGITAL EQUIPMENT CORPORATION AND SHALL NOT BE REPRODUCED OR COPIED OR USED IN WHOLE OR IN PART AS THE BASIS FOR THE MANUFACTURE OR SALE OF ITEMS WITHOUT WRITTEN PERMISSION. COPYRIGHT © 1974, DIGITAL EQUIPMENT CORPORATION"

REVISIONS		
CHK	CHANGE NO.	REV

459

digital	DRN.	DATE	ENG.	DATE 8/13/74
	CHK'D	DATE	BOARD LOCATION: SHEET 1 OF 1	
CDS2E[10,426]	08-SEP-74 00:53	NEXT HIGHER ASSEMBLY:		
FIRST USED ON OPTION/MODEL: KL10		B-DD-M8559-0		

TITLE: I/O BOX CLOCK DISTRIBUTION

SIZE	CODE	NUMBER	REV.
D	CS	M8559-0-CDS2	

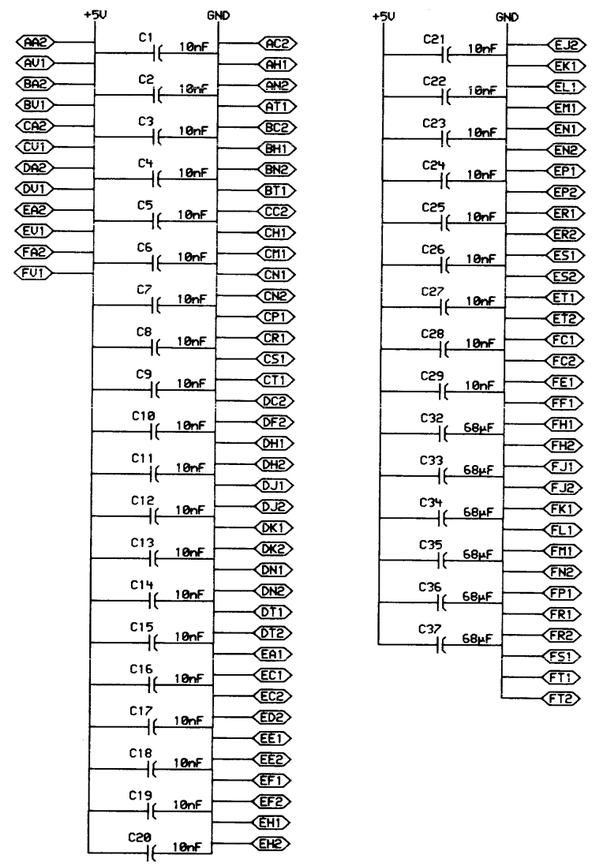

"THIS DRAWING AND SPECIFICATIONS, HEREIN, ARE THE PROPERTY OF DIGITAL EQUIPMENT CORPORATION AND SHALL NOT BE REPRODUCED OR COPIED OR USED IN WHOLE OR IN PART AS THE BASIS FOR THE MANUFACTURE OR SALE OF ITEMS WITHOUT WRITTEN PERMISSION.
COPYRIGHT © 1974, DIGITAL EQUIPMENT CORPORATION"

REVISIONS		
CHK	CHANGE NO.	REV

digital

DRN. C. Smith DATE 13-SEP-74
CHK C. Smith DATE 15-Sep-74
ENG. Sultan Zia DATE 7/16/74
BOARD LOCATION:
SHEET 1 OF 1
CDS3E[4,426] 13-SEP-74 16:02
FIRST USED ON OPTION/MODEL: KL10
NEXT HIGHER ASSEMBLY: B-DD-M8559-0

TITLE: I/O BOX CLOCK DISTRIBUTION

SIZE	CODE	NUMBER	REV.
D	CS	M8559-0-CDS3	

460

SIZE	CODE	NUMBER	REV.
D	CS	KL10-C-UBCI	

AA1	UBUS[N] INIT L\S\
AA2	[N/3+1,GND 2HJ4 8\G\,GND 2KL4-8\G\]
AB1	UBUS[N] INTR L\S\
AB2	[N/3+1,GND 2HJ4-8\G\,GND 2KL4-8\G\]
AC1	UBUS[N] D00 L\S\
AC2	[N/3+1,GND 2HJ4 8\G\,GND 2KL4-8\G\]
AD1	UBUS[N] D02 L\S\
AD2	UBUS[N] D01 L\S\
AE1	UBUS[N] D04 L\S\
AE2	UBUS[N] D03 L\S\
AF1	UBUS[N] D06 L\S\
AF2	UBUS[N] D05 L\S\
AH1	UBUS[N] D08 L\S\
AH2	UBUS[N] D07 L\S\
AJ1	UBUS[N] D10 L\S\
AJ2	UBUS[N] D09 L\S\
AK1	UBUS[N] D12 L\S\
AK2	UBUS[N] D11 L\S\
AL1	UBUS[N] D14 L\S\
AL2	UBUS[N] D13 L S\
AM1	UBUS[N] PA L\S\
AM2	UBUS[N] D15 L\S\
AN1	[N/3+1,GND 2HJ4-8\G\,GND 2KL4-8\G\]
AN2	UBUS[N] PB L\S\
AP1	[N/3+1,GND 2HJ4-8\G\,GND 2KL4-8\G\]
AP2	UBUS[N] BBUSY L\S\
AR1	[N/3+1,GND 2HJ4-8\G\,GND 2KL4-8\G\]
AR2	UBUS[N] SACK L\S\
AS1	[N/3+1,GND 2HJ4-8\G\,GND 2KL4-8\G\]
AS2	UBUS[N] NPR L\S\
AT1	[N/3+1,GND 2HJ4-8\G\,GND 2KL4-8\G\]
AT2	UBUS[N] BR 7 L\S\
AU1	UBUS[N] NPG IN H\S\
AU2	UBUS[N] BR 6 L\S\
AV1	UBUS[N] BG 7 IN H\S\
AV2	[N/3+1,GND 2HJ4-8\G\,GND 2KL4-8\G\]

BA1	UBUS[N] BG 6 IN H\S\
BA2	[N/3+1,GND 2HJ4-8\G\,GND 2KL4-8\G\]
BB1	UBUS[N] BG 5 IN H\S\
BB2	[N/3+1,GND 2HJ4-8\G\,GND 2KL4 8\G\]
BC1	UBUS[N] BR 5 L\S\
BC2	[N/3+1,GND 2HJ4-8\G\,GND 2KL4-8\G\]
BD1	[N/3+1,GND 2HJ4-8\G\,GND 2KL4-8\G\]
BD2	UBUS[N] BR 4 L\S\
BE1	[N/3+1,GND 2HJ4-8\G\,GND 2KL4-8\G\]
BE2	UBUS[N] BG 4 IN H\S\
BF1	UBUS[N] ACLO L\S\
BF2	UBUS[N] DCLJ L\S\
BH1	UBUS[N] A01 L\S\
BH2	UBUS[N] A00 L\S\
BJ1	UBUS[N] A03 L\S\
BJ2	UBUS[N] A02 L\S\
BK1	UBUS[N] A05 L\S\
BK2	UBUS[N] A04 L\S\
BL1	UBUS[N] A07 L\S\
BL2	UBUS[N] A06 L\S\
BM1	UBUS[N] A09 L\S\
BM2	UBUS[N] A08 L\S\
BN1	UBUS[N] A11 L\S\
BN2	UBUS[N] A10 L\S\
BP1	UBUS[N] A13 L\S\
BP2	UBUS[N] A12 L\S\
BR1	UBUS[N] A15 L\S\
BR2	UBUS[N] A14 L\S\
BS1	UBUS[N] A17 L\S\
BS2	UBUS[N] A16 L\S\
BT1	[N/3+1,GND 2HJ4-8\G\,GND 2KL4-8\G\]
BT2	UBUS[N] C1 L\S\
BU1	UBUS[N] SSYN L\S\
BU2	UBUS[N] C0 L\S\
BV1	UBUS[N] MSYN L\S\
BV2	[N/3+1,GND 2HJ4-8\G\,GND 2KL4-8\G\]

"THIS DRAWING AND SPECIFICATIONS, HEREIN, ARE THE PROPERTY OF DIGITAL EQUIPMENT CORPORATION AND SHALL NOT BE REPRODUCED OR COPIED OR USED IN WHOLE OR IN PART AS THE BASIS FOR THE MANUFACTURE OR SALE OF ITEMS WITHOUT WRITTEN PERMISSION.
COPYRIGHT © 1976, DIGITAL EQUIPMENT CORPORATION"

REVISIONS		
CHK	CHANGE NO.	REV

digital	DRN.	DATE 02-FEB-76	ENG.	DATE 05-MAR-76	TITLE. UNIBUS CABLE IN
	CHK	DATE 2/4/76	BOARD LOCATION: SHEET 1 OF 1		
UBCI.DRW[4,426]	27-FEB-76 10:42		NEXT HIGHER ASSEMBLY.		
FIRST USED ON OPTION/MODEL: KL10			B-DD-KL10-C		

SIZE	CODE	NUMBER	REV.
D	CS	KL10-C-UBCI	

461

AA1	UBUS[N] INIT L\C\
AA2	[N/3+1,GND 2 4-8\G\,GND 2KL4-8\G\]
AB1	UBUS[N] INTR L\C\
AB2	[N/3+1,GND 2HJ4-8\G\,GND 2KL4-8\G\]
AC1	UBUS[N] D00 L\C\
AC2	[N/3+1,GND 2HJ4-8\G\,GND 2KL4-8\G\]
AD1	UBUS[N] D02 L\C\
AD2	UBUS[N] D01 L\C\
AE1	UBUS[N] D04 L\C\
AE2	UBUS[N] D03 L\C\
AF1	UBUS[N] D06 L\C\
AF2	UBUS[N] D05 L\C\
AH1	UBUS[N] D08 L\C\
AH2	UBUS[N] D07 L\C\
AJ1	UBUS[N] D10 L\C\
AJ2	UBUS[N] D09 L\C\
AK1	UBUS[N] D12 L\C\
AK2	UBUS[N] D11 L\C\
AL1	UBUS[N] D14 L\C\
AL2	UBUS[N] D13 L\C\
AM1	UBUS[N] PA L\C\
AM2	UBUS[N] D15 L\C\
AN1	[N/3+1,GND 2HJ4-8\G\,GND 2KL4-8\G\]
AN2	UBUS[N] PB L\C\
AP1	[N/3+1,GND 2HJ4-8\G\,GND 2KL4-8\G\]
AP2	UBUS[N] BBUSY L\C\
AR1	[N/3+1,GND 2HJ4-8\G\,GND 2KL4-8\G\]
AR2	UBUS[N] SACK L\C\
AS1	[N/3+1,GND 2HJ4-8\G\,GND 2KL4-8\G\]
AS2	UBUS[N] NPR L\C\
AT1	[N/3+1,GND 2HJ4-8\G\,GND 2KL4-8\G\]
AT2	UBUS[N] BR 7 L\C\
AU1	UBUS[N] NPG OUT H\C\
AU2	UBUS[N] BR 6 L\C\
AV1	UBUS[N] BG 7 OUT H\C\
AV2	[N/3+1,GND 2HJ4-8\G\,GND 2KL4-8\G\]

BA1	UBUS[N] BG 6 OUT H\C\
BA2	[N/3+1,GND 2HJ4-8\G\,GND 2KL4-8\G\]
BB1	UBUS[N] BG 5 OUT H\C\
BB2	[N/3+1,GND 2HJ4-8\G\,GND 2KL4-8\G\]
BC1	UBUS[N] BR 5 L\C\
BC2	[N/3+1,GND 2HJ4-8\G\,GND 2KL4-8\G\]
BD1	[N/3+1,GND 2HJ4-8\G\,GND 2KL4-8\G\]
BD2	UBUS[N] BR 4 L\C\
BE1	[N/3+1,GND 2HJ4-8\G\,GND 2KL4-8\G\]
BE2	UBUS[N] BG 4 OUT H\C\
BF1	UBUS[N] ACLO L\C\
BF2	UBUS[N] DCLO L\C\
BH1	UBUS[N] A01 L\C\
BH2	UBUS[N] A00 L\C\
BJ1	UBUS[N] A03 L\C\
BJ2	UBUS[N] A02 L\C\
BK1	UBUS[N] A05 L\C\
BK2	UBUS[N] A04 L\C\
BL1	UBUS[N] A07 L\C\
BL2	UBUS[N] A06 L\C\
BM1	UBUS[N] A09 L\C\
BM2	UBUS[N] A08 L\C\
BN1	UBUS[N] A11 L\C\
BN2	UBUS[N] A10 L\C\
BP1	UBUS[N] A13 L\C\
BP2	UBUS[N] A12 L\C\
BR1	UBUS[N] A15 L\C\
BR2	UBUS[N] A14 L\C\
BS1	UBUS[N] A17 L\C\
BS2	UBUS[N] A16 L\C\
BT1	[N/3+1,GND 2HJ4-8\G\,GND 2KL4-8\G\]
BT2	UBUS[N] C1 L\C\
BU1	UBUS[N] SSYN L\C\
BU2	UBUS[N] C0 L\C\
BV1	UBUS[N] MSYN L\C\
BV2	[N/3+1,GND 2HJ4-8\G\,GND 2KL4-8\G\]

"THIS DRAWING AND SPECIFICATIONS, HEREIN, ARE THE PROPERTY OF DIGITAL EQUIPMENT CORPORATION AND SHALL NOT BE REPRODUCED OR COPIED OR USED IN WHOLE OR IN PART AS THE BASIS FOR THE MANUFACTURE OR SALE OF ITEMS WITHOUT WRITTEN PERM SSION.
COPYRIGHT © 1976, DIGITAL EQUIPMENT CORPORATION"

REVISIONS		
CHK	CHANGE NO.	REV

digital

DRN. D. Toomey DATE 02-MAR 76 ENG. DATE
CHK. El Stephenson DATE 3/1/76 BOAR. LOCATION:
UBCO.DRW[4,426] 02-MAR-76 09:12 SHEET 1 OF 1
FIRST USED ON OPTION/MODEL: KL10 NEXT HIGHER ASSEMBLY: B-DD-KL10-C

TITLE: UNIBUS CABLE OUT

SIZE	CODE	NUMBER	REV.
D	CS	KL10-C-UBCO	

462

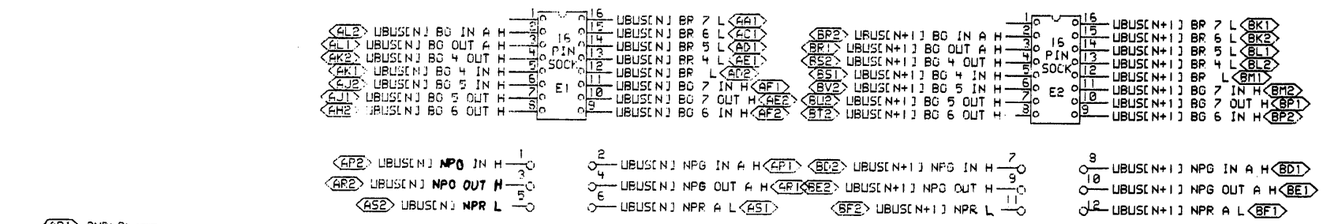

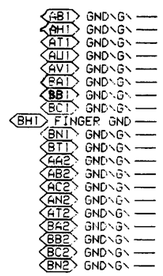

DTE NPR NPR ENABLED (NORMAL SETUP) JUMPER	DTE NPR NPR DISABLED JUMPER
LUG 1 TO LUG 2	LUG 1 TO LUG 3
LUG 3 TO LUG 4	LUG 5 OPEN
LUG 5 TO LUG 6	

DTE NPR NPR ENABLED (NORMAL SETUP) JUMPER	DTE NPR NPR DISABLED JUMPER
LUG 7 TO LUG 8	LUG 7 TO LUG 9
LUG 9 TO LUG 10	LUG 11 OPEN
LUG 11 TO LUG 12	

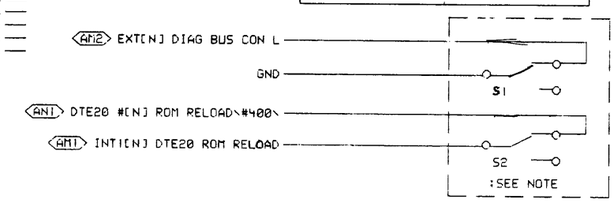

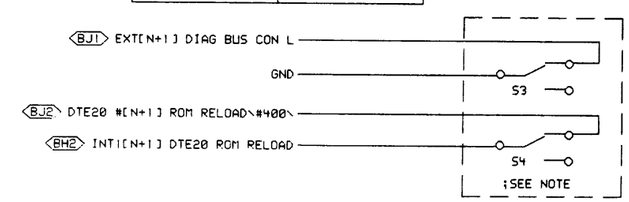

11 INT LEVEL DESIRED	PART NUMBER INSERT IN E1)
4	5408776
5	5408778
6	5408780
7	5408782

;NOTES:

1. THESE SWITCHES ARE LOCATED ON THE MASTER INTERRUPT SWITCH BOARD 5411360 OR 5411360YA
2. IN 1080 CONFIGURATIONS, THE 5411360YA IS USED.
3. THE 5411360YA HAS S2 ONLY. THE 5411360 HAS S1,S2,S3,S4.

"THIS DRAWING AND SPECIFICATIONS, HEREIN, ARE THE PROPERTY OF DIGITAL EQUIPMENT CORPORATION AND SHALL NOT BE REPRODUCED OR COPIED OR USED IN WHOLE OR IN PART AS THE BASIS FOR THE MANUFACTURE OR SALE OF ITEMS WITHOUT WRITTEN PERMISSION. COPYRIGHT © 1974, DIGITAL EQUIPMENT CORPORATION"

REVISIONS		
CHK	CHANGE NO.	REV

digital

DRN. DATE 12-27-74 ENG. DATE 12/27/74
CHK'D DATE 12-27-74 BOARD LOCATION:
SHEET 1 OF 1
SWITCH,426J 27-DEC-74 13:37 NEXT HIGHER ASSEMBLY: B-DD-M8564-0
FIRST USED ON OPTION/MODEL: KL10

TITLE: DTE20 INTERRUPT JUMPER

SIZE	CODE	NUMBER	REV.
D	CS	M8564-0-INTJ	

463

"THIS DRAWING AND SPECIFICATIONS, HEREIN, ARE THE PROPERTY OF DIGITAL EQUIPMENT CORPORATION AND SHALL NOT BE REPRODUCED OR COPIED OR USED IN WHOLE OR IN PART AS THE BASIS FOR THE MANUFACTURE OR SALE OF ITEMS WITHOUT WRITTEN PERMISSION.
COPYRIGHT ©1975 DIGITAL EQUIPMENT CORPORATION"

	1	2	3	4	5	6	7	8	9	10	11	12	13	14	15	16
A–B	BC20C (M9006)															BCIIA (M929)
C–D	BC20C (M9006)	M8563	M8560	M8558	M8558	M8558	M8558	M8558	M8558	M8558	M8558	SPARE	M8550	M8550	M8551	BCIIA (M929)
E–F	SPARE															SPARE

FIRST USED ON OPTION/MODEL	QTY.	DESCRIPTION	PART NO.	ITEM NO.
KL10		PARTS LIST		

DIMENSIONAL TOLERANCE			
DIMENSIONS ARE MILLIMETERS / INCHES UNLESS OTHERWISE SPECIFIED			
MILLIMETERS	INCHES	ANGLES	
X.XX = ±0.10 X.X = ±0.5 X = ±2	.XXX = ±.005 .XX = ±.02 .X = ±.1	±0° 30'	
THIRD ANGLE PROJECTION	REMOVE BURRS AND BREAK SHARP CORNERS SURFACE QUALITY ✓		
	MATERIAL — // —		
	FINISH — // —		

		DATE
DRN.		6-5-75
CHK'D		6-5-75
ENG.		6-5-75
PROJ. ENG.		6/12/75
PROD.		6/12/75

NEXT HIGHER ASSY.: D-UA-KL10-0-0

SCALE —//—

SHEET 1 OF 1

digital

TITLE: MODULE UTILIZATION BAY 1

SIZE	CODE	NUMBER	REV.
C	MU	KL10-0-BAY1	

DIST.

REVISIONS	CHANGE NO.	REV.
CHK		

SIZE	CODE	NUMBER	REV.
C	MU	KL10-0-BAY1	

46d

REVISION CONTROL SHEET

CUSTOMER PRINT SET	MFG SET	DRAWING NO	NO OF SHT	DESCRIPTION	OPTION NO/FILE DATE	REVISIONS			
			-	MODULE REVISION		A	B		B
		D-UA-M8550-0-0	8	DATA PATH BOARD		-	A		A1
		D-CS-M8550-0-DLH1	1	IBUS ADAPTER DATA PATH		-	A		A
		D-CS-M8550-0-DLH2	1	IBUS ADAPTER DATA PATH		-	A		A
		D-CS-M8550-0-DLH3	1	IBUS ADAPTER DATA PATH		-	A		A
		D-CS-M8550-0-DLH4	1	IBUS ADAPTER DATA PATH		-	A		A
		D-CS-M8550-0-DLH5	1	IBUS ADAPTER DATA PATH		-	A		A
		D-CS-M8550-0-DLH6	1	IBUS ADAPTER POWER AND GROUND		-	A		A
		K-CO-M8550-0-4	1	DATA PATH BOARD (CALDEC DATA BASE)		B	B		B
		D-AH-M8550-0-5	4	DATA PATH BOARD		A	A		A
		B-MH-M8550-0-6	1	MODULE ECO HISTORY		-	-		-
		5010519	-	ETCH CIRCUIT BOARD		B	B		
		P00-M8550-00		PROCESS SHEET (REF ONLY)		-	-		
					ECO NO	ORIG	00001	00002 NEW LAYOUT REF SHT 3	00003

CUSTOMER PRINT SET CODES

X = PRINT OF DOCUMENT INCLUDED IN PRINT SET
C = INCLUDES ALL PRINTS INDICATED ON DOCUMENT
S = CONFIDENTIAL AUTHORIZED SIGNATURE REQUIRED

TITLE		SIZE	CODE	NUMBER	REV
DATA PATH BOARD	SHEET 2 OF 3	B	DD	M8550-0	C

465

MR

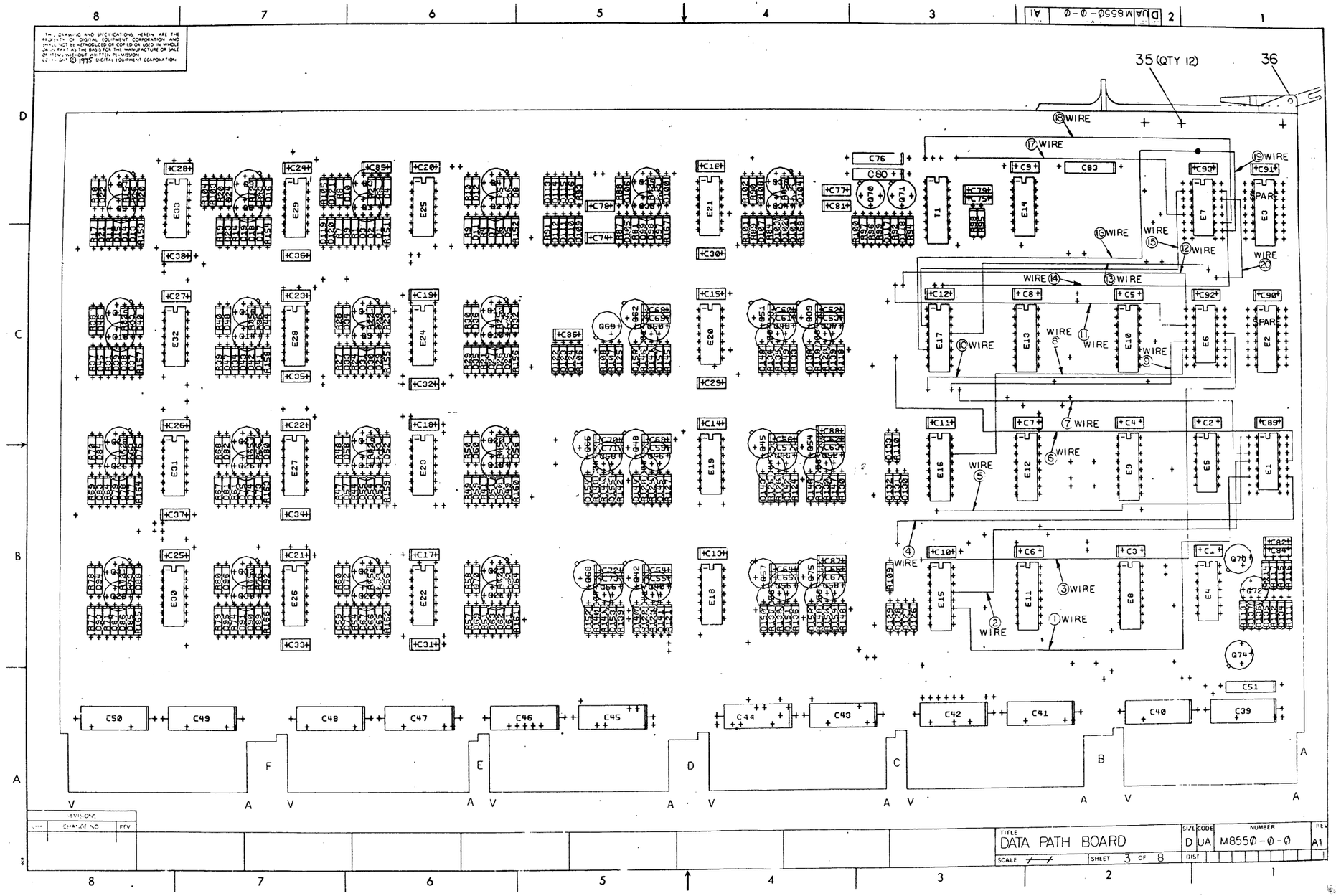

THE DRAWING AND SPECIFICATIONS HEREIN ARE THE PROPERTY OF DIGITAL EQUIPMENT CORPORATION AND SHALL NOT BE REPRODUCED OR COPIED OR USED IN WHOLE OR IN PART AS THE BASIS FOR THE MANUFACTURE OF SALE OF ITEMS WITHOUT WRITTEN PERMISSION
COPYRIGHT © 1975 DIGITAL EQUIPMENT CORPORATION

REVISIONS

DATE	CHANGE NO	REV

TITLE DATA PATH BOARD	SIZE D	CODE UA	NUMBER M8550-0-0
SCALE 1/1	SHEET 3 OF 8	DIST	REV A1

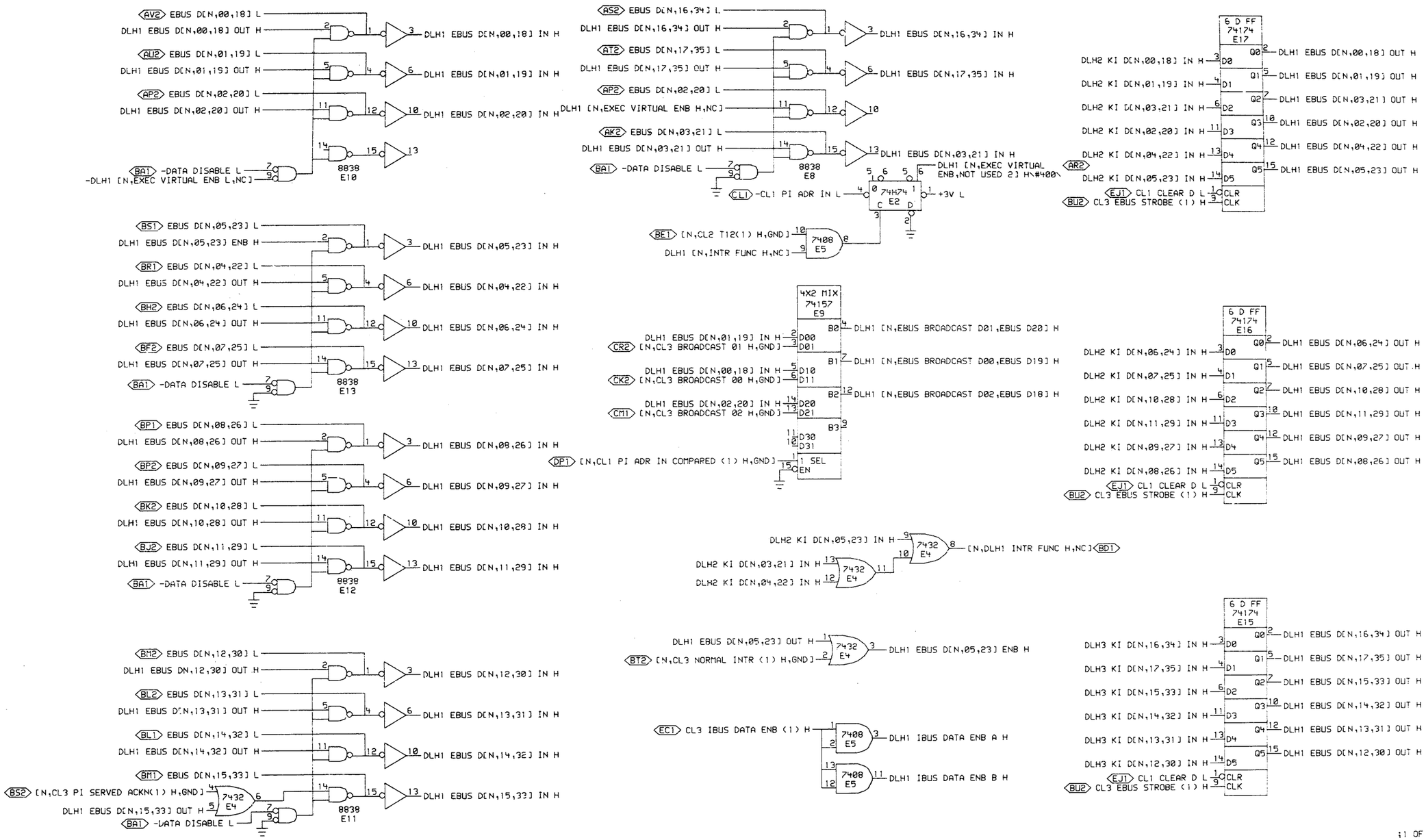

"THIS DRAWING AND SPECIFICATIONS, HEREIN, ARE THE PROPERTY OF DIGITAL EQUIPMENT CORPORATION AND SHALL NOT BE REPRODUCED OR COPIED OR USED IN WHOLE OR IN PART AS THE BASIS FOR THE MANUFACTURE OR SALE OF ITEMS WITHOUT WRITTEN PERMISSION.
COPYRIGHT © 1975, DIGITAL EQUIPMENT CORPORATION"

REVISIONS		
CHK	CHANGE NO.	REV
	M8550-0XXXO1	A
	7/21/75	
	W. BRUCKERT	
	7/21/75	

digital	DRN. G. Foody	DATE 5/14/75	ENG. W. Bruckert	DATE 5/14/75
	CHK'D	DATE 5-19-75	BOARD LOCATION:	
DLH1[4,426]	15-MAY-75 09:50		NEXT HIGHER ASSEMBLY:	
FIRST USED ON OPTION/MODEL: KL10			B-DD-M8550-0	

TITLE: IBUS ADAPTER DATA PATH

SIZE	CODE	NUMBER	REV.
D	CS	M8550-0-DLH1	A

SHEET 1 OF 1

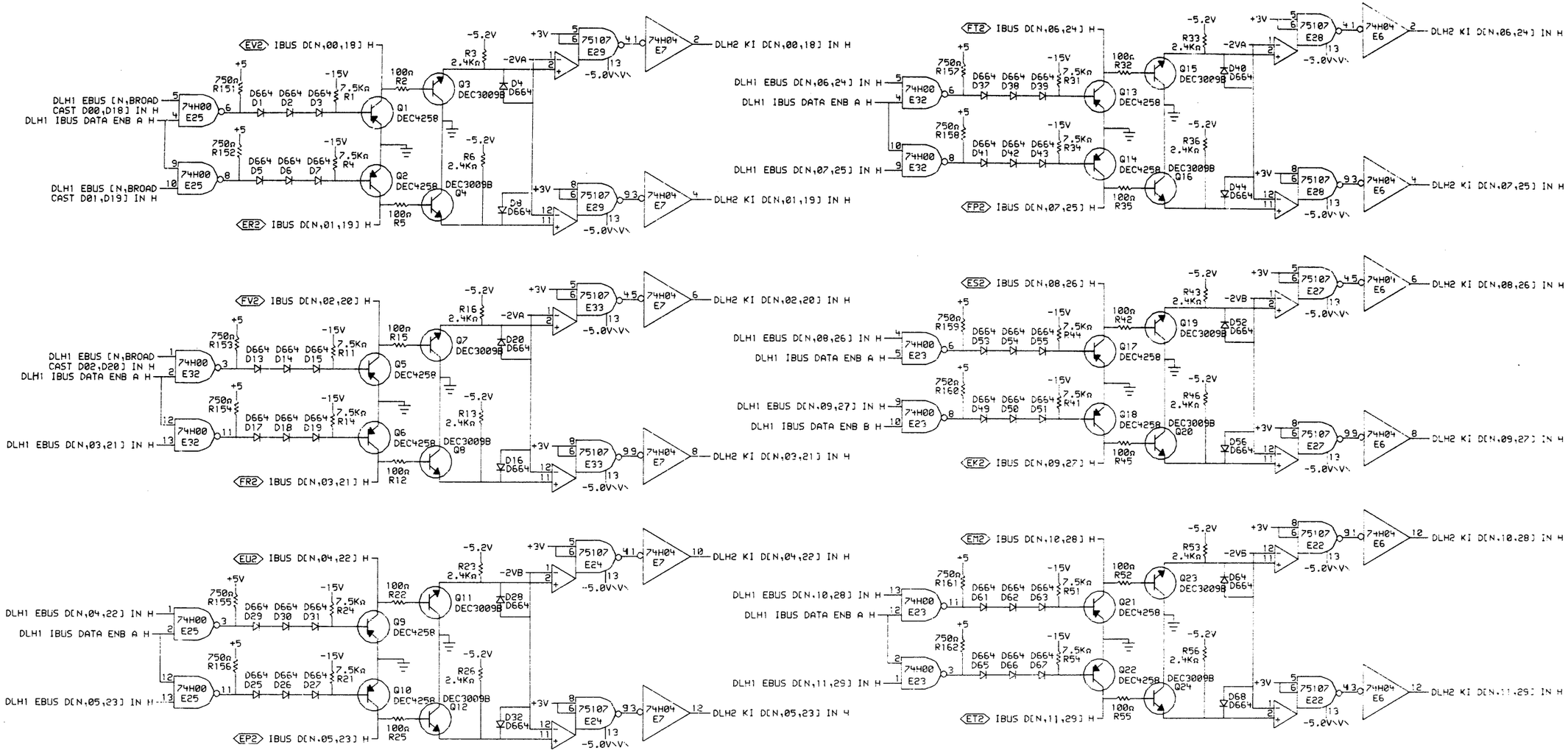

"THIS DRAWING AND SPECIFICATIONS, HEREIN, ARE THE PROPERTY OF DIGITAL EQUIPMENT CORPORATION AND SHALL NOT BE REPRODUCED OR COPIED OR USED IN WHOLE OR IN PART AS THE BASIS FOR THE MANUFACTURE OR SALE OF ITEMS WITHOUT WRITTEN PERMISSION.
COPYRIGHT © 1975, DIGITAL EQUIPMENT CORPORATION"

REVISIONS		
CHK	CHANGE NO.	REV
	M8550-00001	A
	7-9-75	
	W. BRUCKERT	

digital

DLH2[4,426] 15-MAY-75 09:51

DRN. S. Foonly	DATE 5/19/75	ENG. W. Bruckert	DATE 5/19/75
CHK'D.	DATE 5-19-75	BOARD LOCATION:	
		SHEET 1 OF 1	
FIRST USED ON OPTION/MODEL: KL10		NEXT HIGHER ASSEMBLY: B-DD-M8550-0	

TITLE: IBUS ADAPTER DATA PATH

SIZE	CODE	NUMBER	REV.
D	CS	M8550-0-DLH2	A

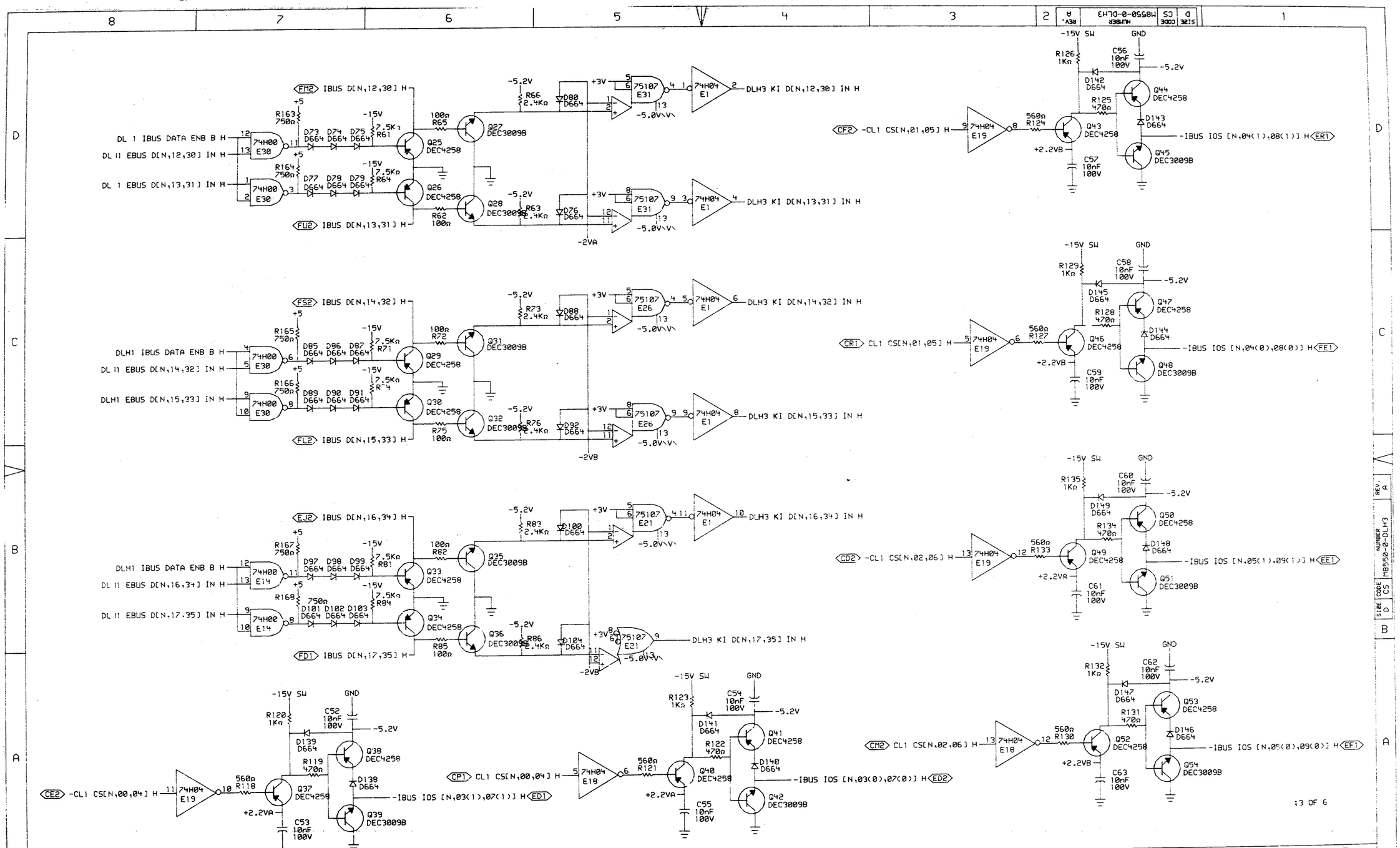

"THIS DRAWING AND SPECIFICATIONS, HEREIN, ARE THE PROPERTY OF DIGITAL EQUIPMENT CORPORATION AND SHALL NOT BE REPRODUCED OR COPIED OR USED IN WHOLE OR IN PART AS THE BASIS FOR THE MANUFACTURE OR SALE OF ITEMS WITHOUT WRITTEN PERMISSION.
COPYRIGHT © 1975, DIGITAL EQUIPMENT CORPORATION"

REVISIONS		
CHK	CHANGE NO.	REV
	M8550-00001	A
	W. BRUCKER	

digital

DRN. E. Foonby	DATE 5/19/75	ENG. W. Brucker	DATE 5/19/75
CHK'D.	DATE 5-19-75	BOARD LOCATION:	SHEET 1 OF 1
DLH3[4,426]	15-MAY-75 09:52	NEXT HIGHER ASSEMBLY: B-DD-M8550-0	
FIRST USED ON OPTION/MODEL: KL10			

TITLE: IBUS ADAPTER DATA PATH

SIZE	CODE	NUMBER	REV.
D	CS	M8550-0-DLH3	A

469

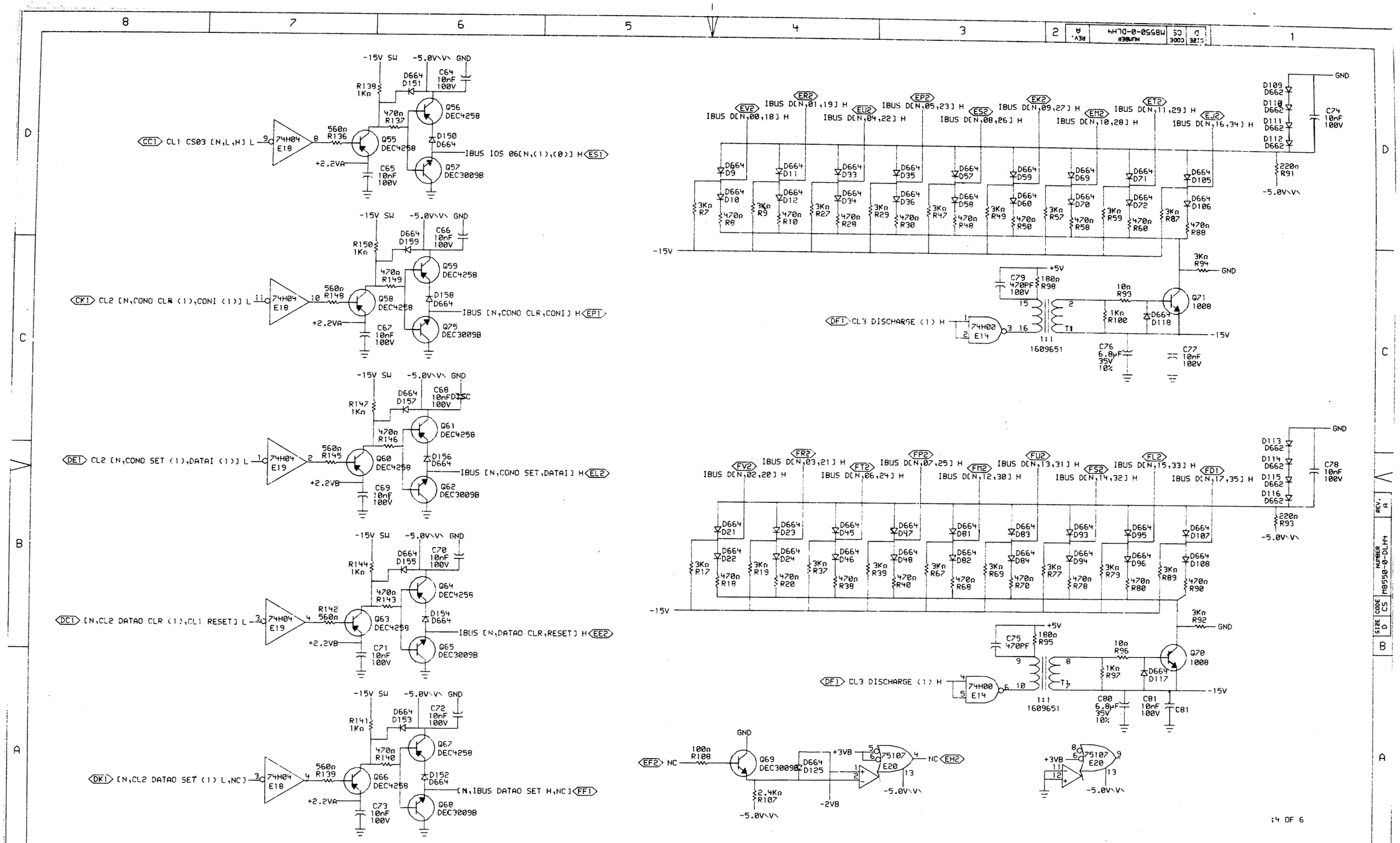

"THIS DRAWING AND SPECIFICATIONS, HEREIN, ARE THE PROPERTY OF DIGITAL EQUIPMENT CORPORATION AND SHALL NOT BE REPRODUCED OR COPIED OR USED IN WHOLE OR IN PART AS THE BASIS FOR THE MANUFACTURE OR SALE OF ITEMS WITHOUT WRITTEN PERMISSION. COPYRIGHT © 1975, DIGITAL EQUIPMENT CORPORATION"

REVISIONS		
CHK	CHANGE NO.	REV
	M8550-00001	A
	7/9/75	
	W. BRUCKERT	

digital	DRN. L. Franky	DATE 5/19/75	ENG. W. Bruckert	DATE 5/19/75
	CHK'D.	DATE 5-19-75	BOARD LOCATION: SHEET 1 OF 1	
DLH4[4,426]		15-MAY-75 10:07	NEXT HIGHER ASSEMBLY: B-DD-M8550-0	
FIRST USED ON OPTION/MODEL: KL10				

TITLE: IBUS ADAPTER DATA PATH

SIZE	CODE	NUMBER	REV.
D	CS	M8550-0-DLH4	A

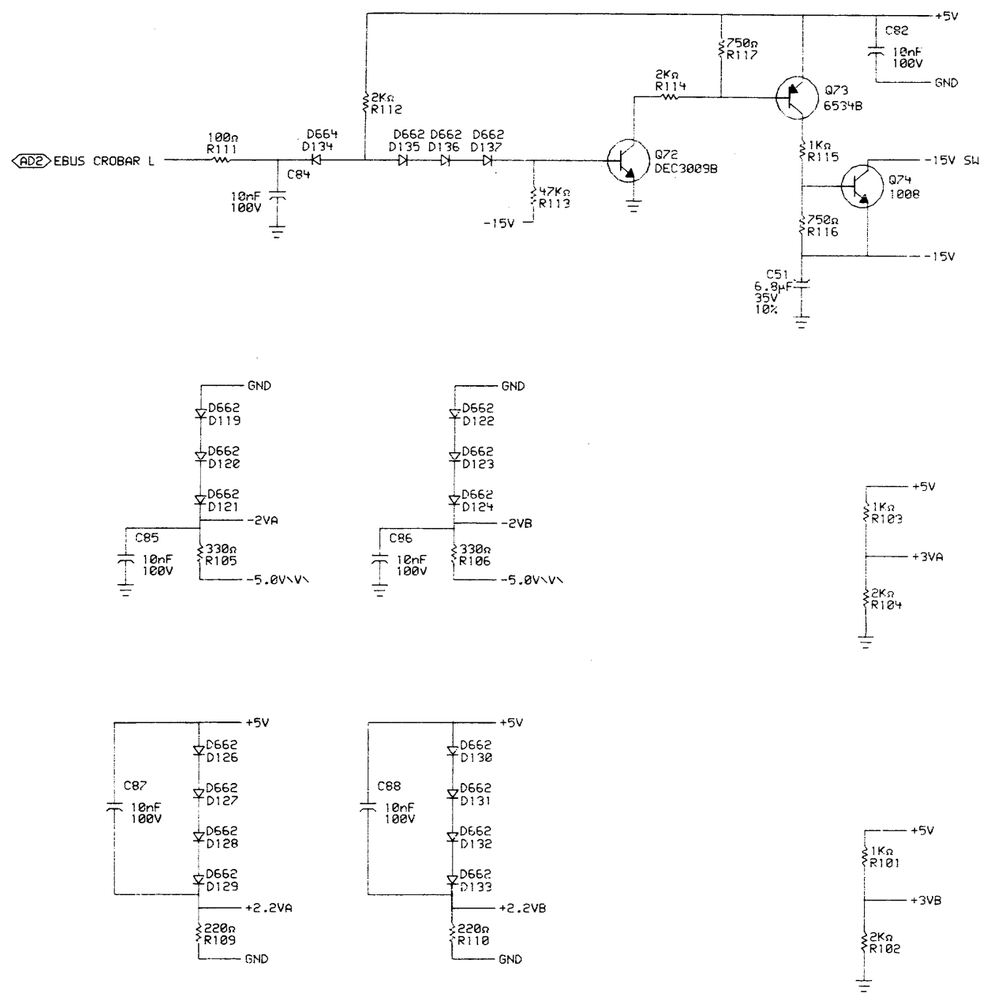

;5 OF 6

"THIS DRAWING AND SPECIFICATIONS, HEREIN, ARE THE PROPERTY OF DIGITAL EQUIPMENT CORPORATION AND SHALL NOT BE REPRODUCED OR COPIED OR USED IN WHOLE OR IN PART AS THE BASIS FOR THE MANUFACTURE OR SALE OF ITEMS WITHOUT WRITTEN PERMISSION.
COPYRIGHT © 1975, DIGITAL EQUIPMENT CORPORATION"

REVISIONS		
CHK	CHANGE NO.	REV
	M8550-00001	A
	6/11/78	
	W BRUCKERT	

DRN. L. Foody DATE 5/19/75 ENG. W. Bruckert DATE 5/19/75
CHK'D DATE 5-19-75 BOARD LOCATION: SHEET 1 OF 1
DLH5[4,426] 15-MAY-75 10:08 NEXT HIGHER ASSEMBLY:
FIRST USED ON OPTION/MODEL: KL10 B-DD-M8550-0

TITLE: IBUS ADAPTER DATA PATH

SIZE	CODE	NUMBER	REV.
D	CS	M8550-0-DLH5	A

SIZE D CODE CS NUMBER M8550-0-DLH5 REV. A

471

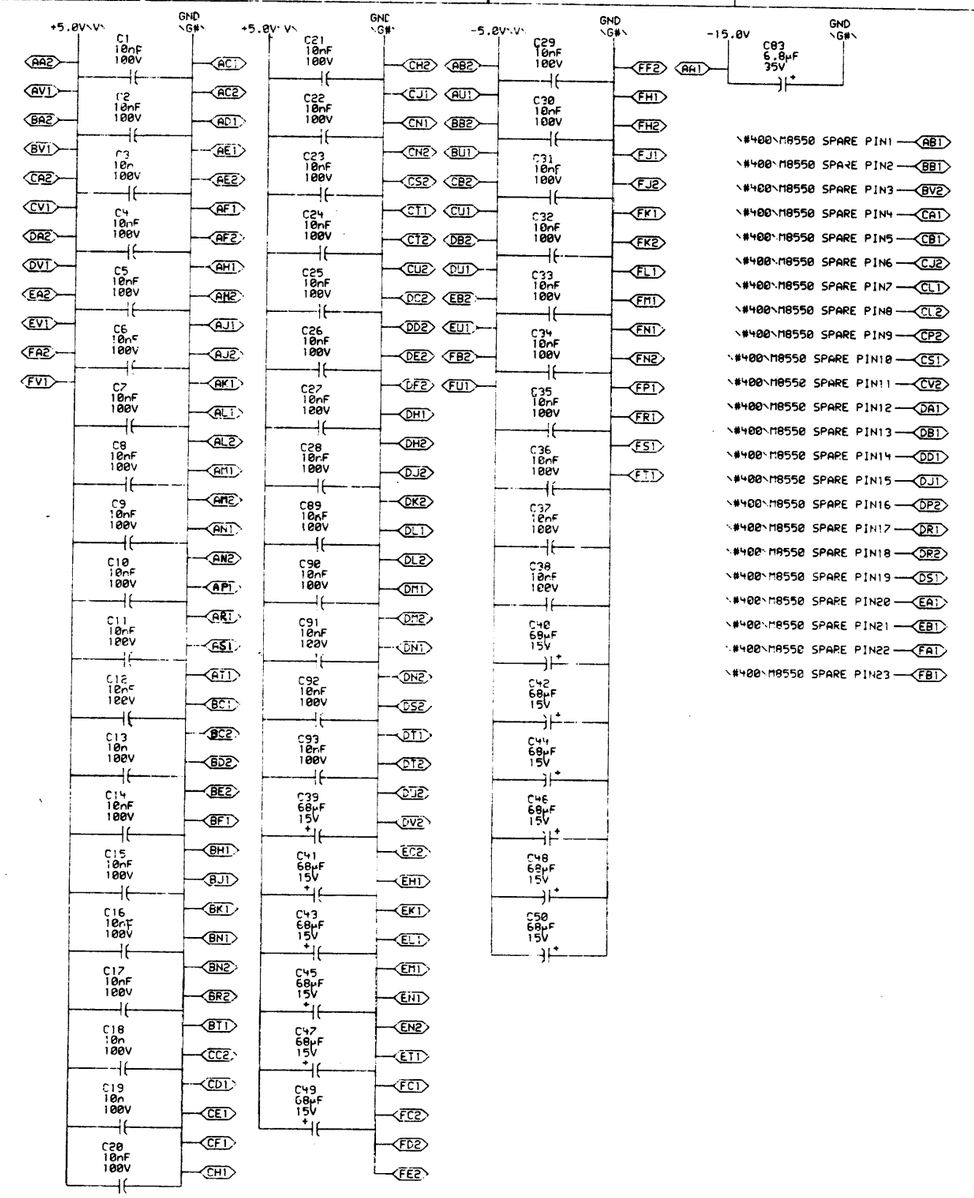

"T IS DRAWING AND SPECIFICATIONS, HEREIN, ARE THE PROPERTY OF DIGITAL EQUIPMENT CORPORATION AND SHALL NOT BE REPRODUCED OR COPIED OR USED IN WHOLE OR IN PA T AS THE BASIS FOR THE MANUFACTURE OR SALE OF ITEMS WITHOUT WRITTEN PERMISSION.
COPYRIGHT © 1975, DIGITAL EQUIPMENT CORPORATION"

REVISIONS		
CHK	CHANGE NO.	REV
	M8550-00001	A
	19/25	
	W. BRUCKERT	

digital

DRN. J. Foonly	DATE 5/19/75	ENG. W. Bruckert	DATE 5/19/75
CHK'D.	DATE 5-19-75	BOARD LOCATION:	
		SHEET 1 OF 1	
DLH6EX[4,426]	15-MAY-75 10:09	NEXT HIGHER ASSEMBLY:	
FIRST USED ON OPTION/MODEL: KL10		B-DD-M8550-0	

TITLE: IBUS ADAPTOR POWER AND GROUND

SIZE	CODE	NUMBER	REV.
D	CS	M8550-0-DLH6	A

REVISION CONTROL SHEET

CUSTOMER PRINT SET	MFG SET	DRAWING NO	NO OF SHT	DESCRIPTION	OPTION NO/FILE DATE	REVISIONS
				MODULE REVISION		C
		D-UA-M8550-0-0	6	DATA PATH BD		B
		D-CS-M8550-0-DLH1	1	BUS ADAPTER DATA PATH		B
		D-CS-M8550-0-DLH2	1	BUS ADAPTER DATA PATH		B
		D-CS-M8550-0-DLH3	1	BUS ADAPTER DATA PATH		B
		D-CS-M8550-0-DLH4	1	BUS ADAPTER DATA PATH		B
		D-CS-M8550-0-DLH5	1	BUS ADAPTER DATA PATH		B
		D-CS-M8550-0-DLH6	1	BUS ADAPTER POWER AND GROUND		B
		K-CO-M8550-0-4	1	DATA PATH BOARD		C
				CALDEC DATA BASE		
		D-AH-M8550-0-5	4	DATA PATH BOARD		B
		B-MH-M8550-0-6	1	MODULE ECO HISTORY		B
		5010519		ETCH CIRCUIT BOARD		C
		P00-M8550-00		PROCESS SHEET (REF ONLY)		

CUSTOMER PRINT SET CODES

X = PRINT OF DOCUMENT INCLUDED IN PRINT SET
C = INCLUDES ALL PRINTS INDICATED ON DOCUMENT
S = CONFIDENTIAL AUTHORIZED SIGNATURE REQUIRED

ECO NO 00002

TITLE		SIZE	CODE	NUMBER	REV
DATA PATH BOARD	SHEET 3 OF 3	B	DD	M8550-0	C

MR

4)3

"THIS DRAWING AND SPECIFICATIONS, HEREIN, ARE THE PROPERTY OF DIGITAL EQUIPMENT CORPORATION AND SHALL NOT BE REPRODUCED OR COPIED OR USED IN WHOLE OR IN PART AS THE BASIS FOR THE MANUFACTURE OR SALE OF ITEMS WITHOUT WRITTEN PERMISSION. COPYRIGHT © 1975, DIGITAL EQUIPMENT CORPORATION"

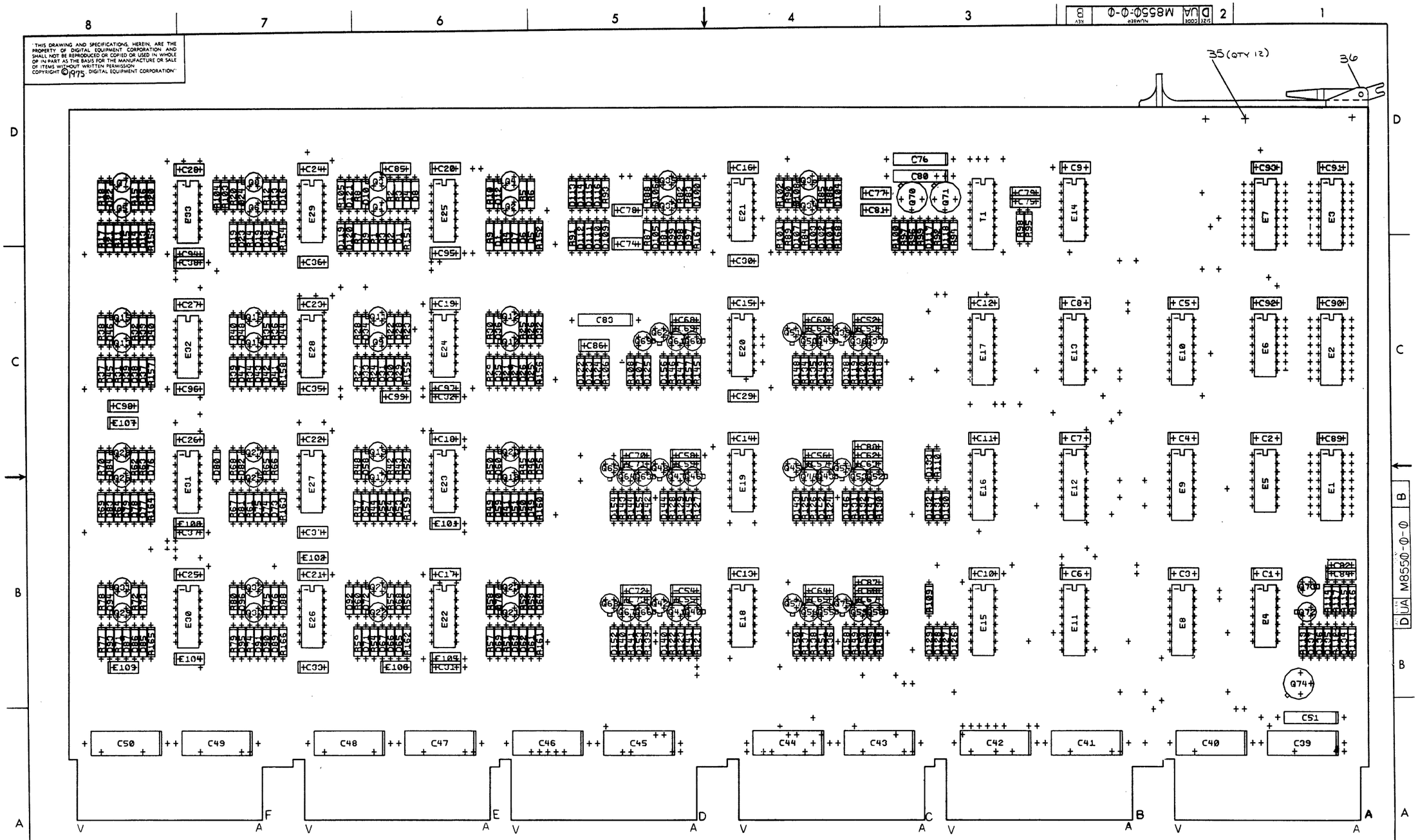

REVISION		
DATE	CHANGE NO	REV

TITLE	SIZE	CODE	NUMBER	REV.
DATA PATH BOARD	D	UA	M8550-0-0	B
SCALE — / —	SHEET 2 OF 6	DIST.		

D UA M8550-0-0 B

474

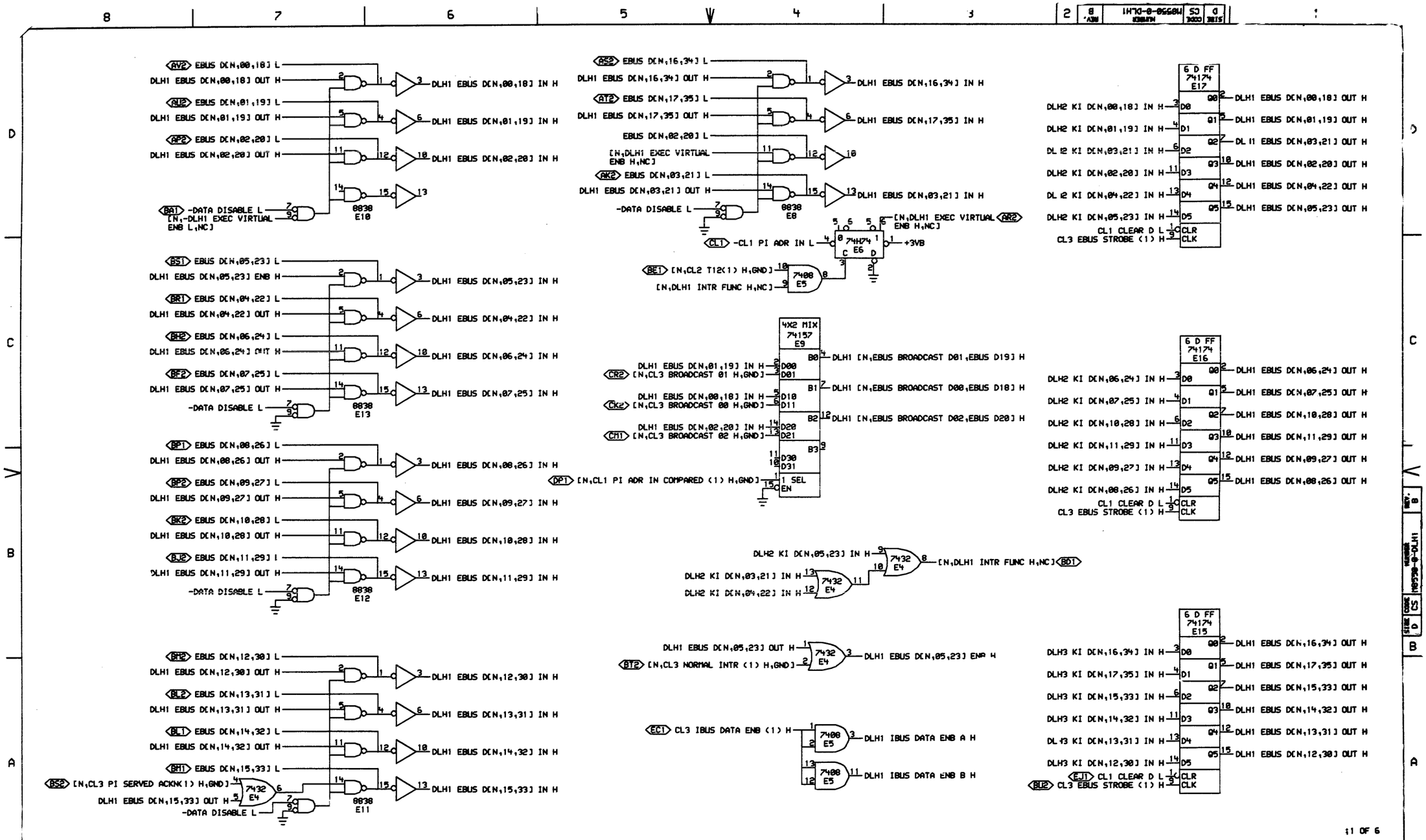

"THIS DRAWING AND SPECIFICATIONS, HEREIN, ARE THE PROPERTY OF DIGITAL EQUIPMENT CORPORATION AND SHALL NOT BE REPRODUCED OR COPIED OR USED IN WHOLE OR IN PART AS THE BASIS FOR THE MANUFACTURE OR SALE OF ITEMS WITHOUT WRITTEN PERMISSION. COPYRIGHT © 1979, DIGITAL EQUIPMENT CORPORATION"

REVISIONS		
CHK	CHANGE NO.	REV
	00002	B
BRUCKERT 9-16-79		

digital

DRN J. Zaorsky DATE 30-JUN-79 ENG. DATE 9/16/79
CHK'D DATE 30 JUN 79 BOARD LOCATION: SHEET 1 OF 1
DLH1RC4,426] 27-JUN-79 10:32 NEXT HIGHER ASSEMBLY:
FIRST USED ON OPTION/MODEL: KL10 B-DD-M8550-0

TITLE: IBUS ADAPTER DATA PATH

SIZE	CODE	NUMBER	REV.
D	CS	M8550-0-DLH1	B

MR

425

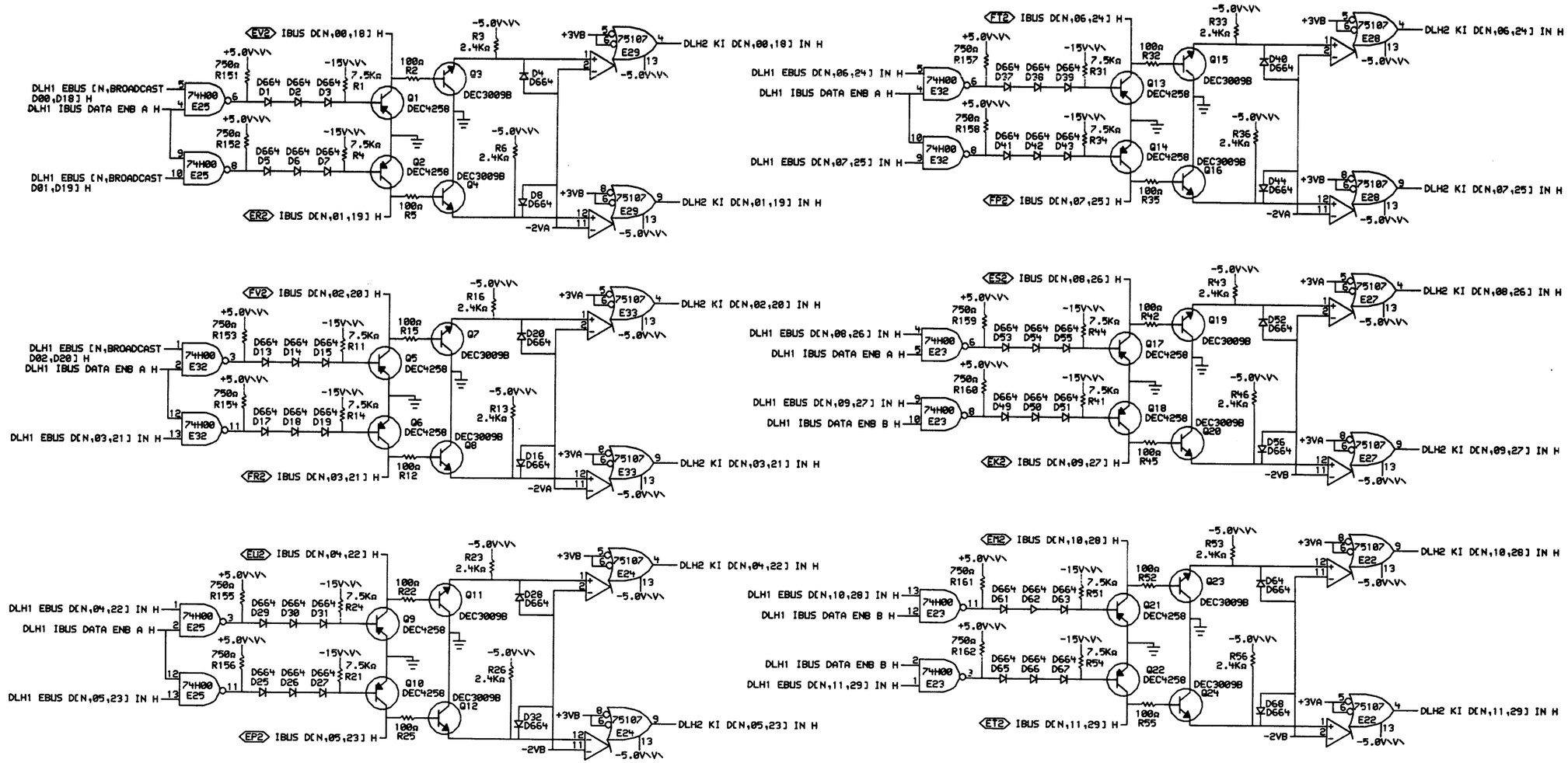

"THIS DRAWING AND SPECIFICATIONS, HEREIN, ARE THE PROPERTY OF DIGITAL EQUIPMENT CORPORATION AND SHALL NOT BE REPRODUCED OR COPIED OR USED IN WHOLE OR IN PART AS THE BASIS FOR THE MANUFACTURE OR SALE OF ITEMS WITHOUT WRITTEN PERMISSION. COPYRIGHT © 1975, DIGITAL EQUIPMENT CORPORATION"

REVISIONS		
CHK	CHANGE NO.	REV
	00002	B
	BRUCKERT 9/16/75	

DRN. J. Toomey DATE 27-JUN-75 ENG. M. Bruckert DATE 9/11/75
CHK (D) DATE 7/30/75 BOARD LOCATION: SHEET 1 OF 1
DLH2RC[4,426] 27-JUN-75 10:43 NEXT HIGHER ASSEMBLY: B-DD-M8550-0
FIRST USED ON OPTION/MODEL: KL10

TITLE: IBUS ADAPTER DATA PATH

SIZE	CODE	NUMBER	REV.
D	CS	M8550-0-DLH2	B

476

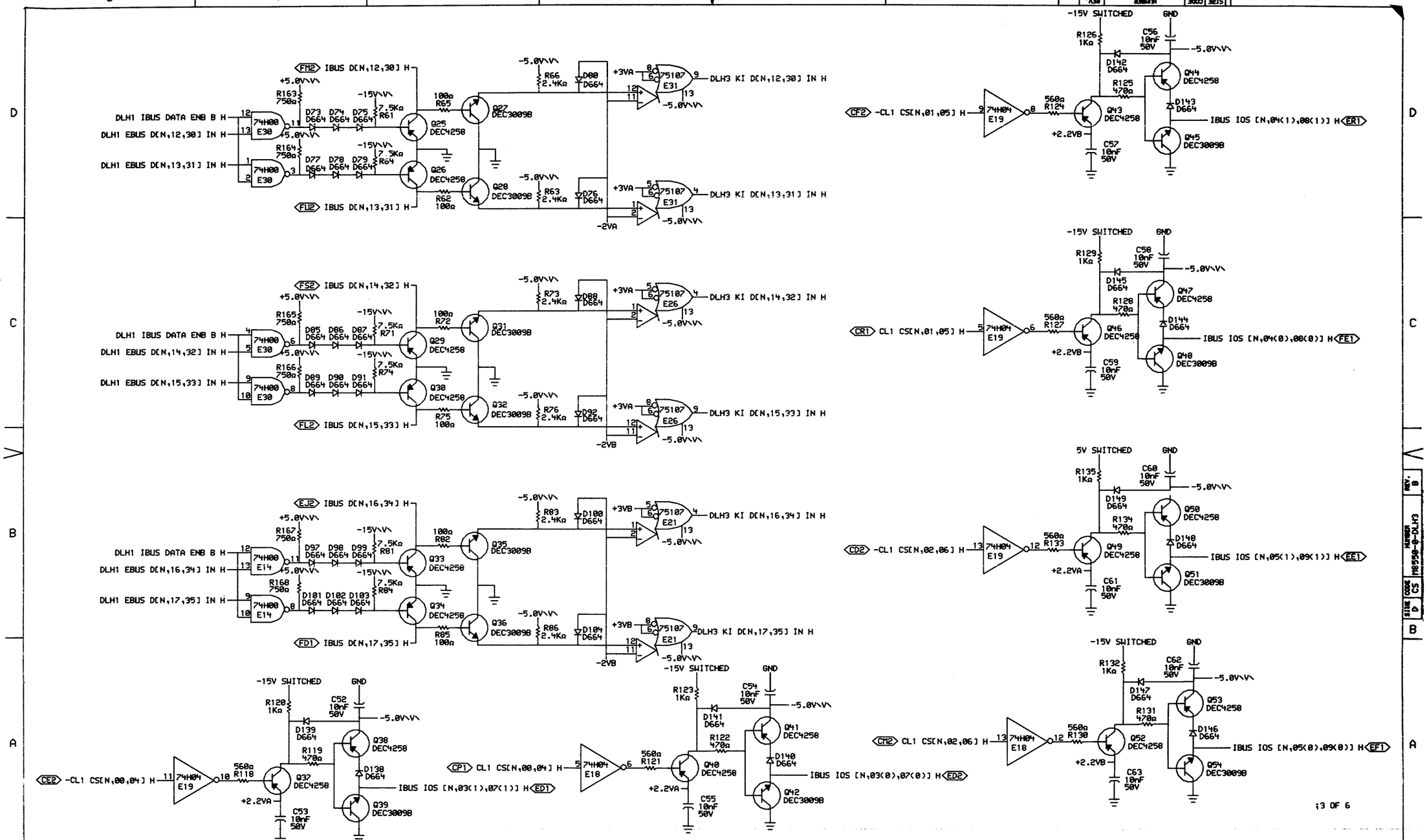

"THIS DRAWING AND SPECIFICATIONS, HEREIN, ARE THE PROPERTY OF DIGITAL EQUIPMENT CORPORATION AND SHALL NOT BE REPRODUCED OR COPIED OR USED IN WHOLE OR IN PART AS THE BASIS FOR THE MANUFACTURE OR SALE OF ITEMS WITHOUT WRITTEN PERMISSION. COPYRIGHT © 1975, DIGITAL EQUIPMENT CORPORATION"

REVISIONS		
CHK	CHANGE NO.	REV
	00002	B
	BRUCKERT	

DLH3R[4,426] 27-JUN-75 10:46

FIRST USED ON OPTION/MODEL: KL10

DRN. | DATE 27-JUN-75 | ENG. | DATE
CHK'D. | DATE | BOARD LOCATION: | SHEET 1 OF 1

NEXT HIGHER ASSEMBLY: B-DD-M8550-0

TITLE: IBUS ADAPTER DATA PATH

SIZE	CODE	NUMBER	REV.
D	CS	M8550-0-DLH3	B

MR

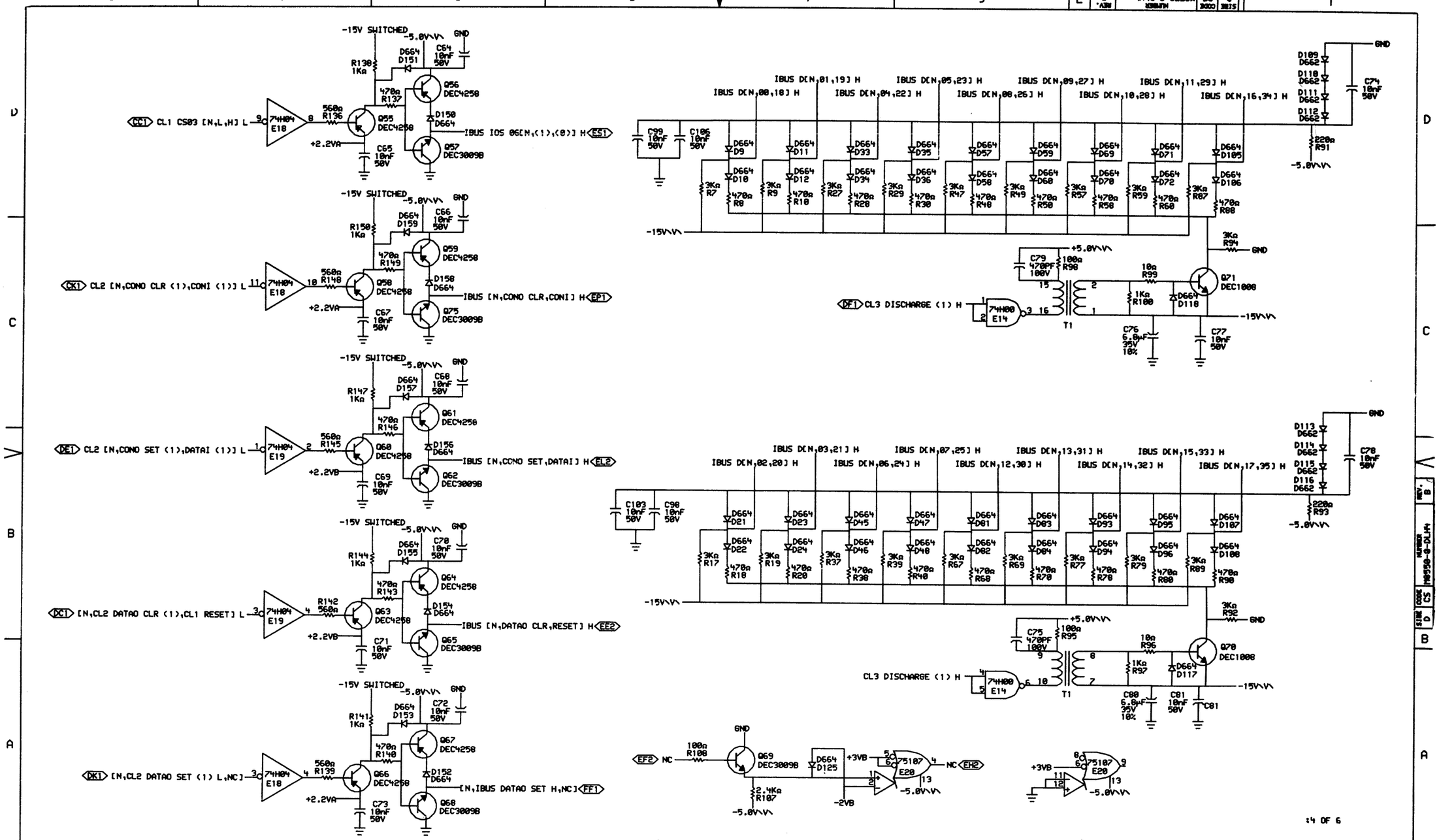

"THIS DRAWING AND SPECIFICATIONS, HEREIN, ARE THE PROPERTY OF DIGITAL EQUIPMENT CORPORATION AND SHALL NOT BE REPRODUCED OR COPIED OR USED IN WHOLE OR IN PART AS THE BASIS FOR THE MANUFACTURE OR SALE OF ITEMS WITHOUT WRITTEN PERMISSION. COPYRIGHT © 1975, DIGITAL EQUIPMENT CORPORATION"

REVISIONS		
CHK	CHANGE NO.	REV
		B
ERUCKERT		

digital

DRN. | DATE 27-JUN-75 | ENG. | DATE
CHK'D | DATE | BOARD LOCATION: | SHEET 1 OF 1
DLH4R(4.426) | 27-JUN-75 10:51 | NEXT HIGHER ASSEMBLY: B-DD-M8550-0
FIRST USED ON OPTION/MODEL: KL10

TITLE: IBUS ADAPTER DATA PATH

SIZE	CODE	NUMBER	REV.
D	CS	M8550-0-DLH4	B

MR 1

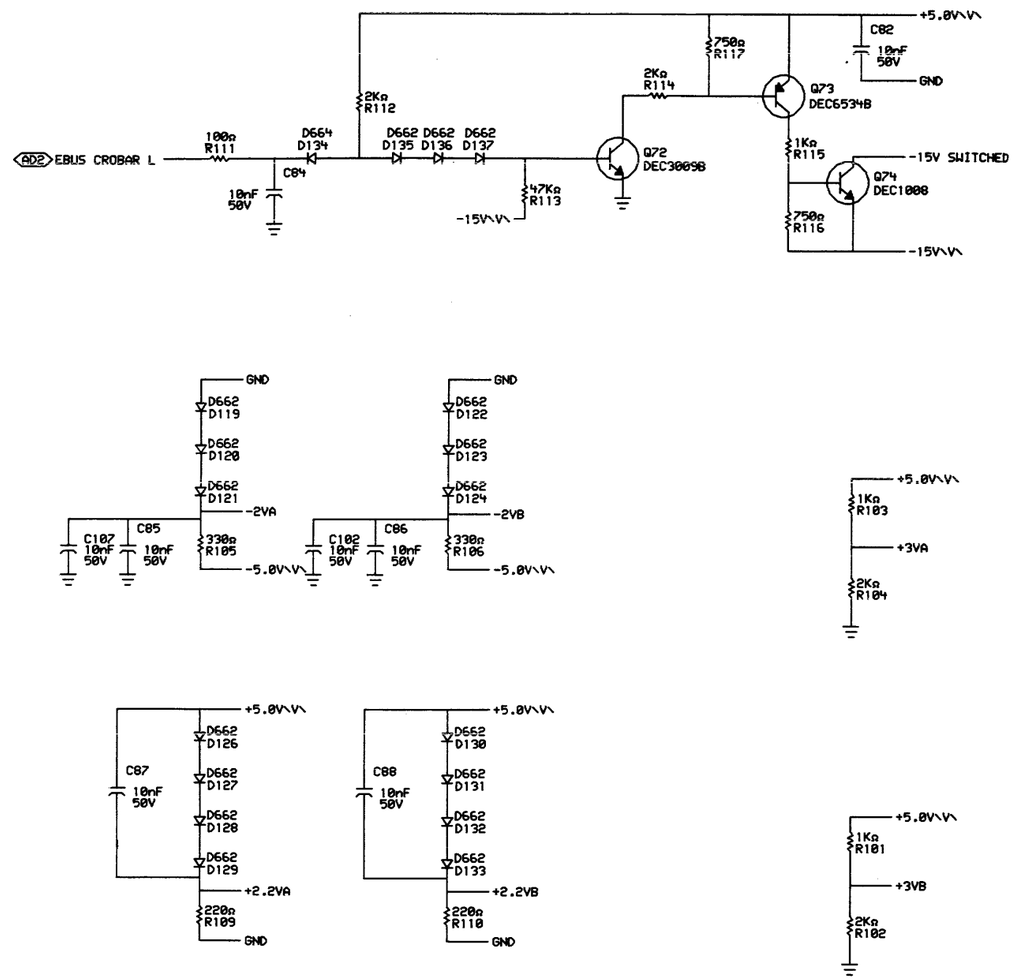

;5 OF 6

"THIS DRAWING AND SPECIFICATIONS, HEREIN, ARE THE PROPERTY OF DIGITAL EQUIPMENT CORPORATION AND SHALL NOT BE REPRODUCED OR COPIED OR USED IN WHOLE OR IN PART AS THE BASIS FOR THE MANUFACTURE OR SALE OF ITEMS WITHOUT WRITTEN PERMISSION. COPYRIGHT © 1975, DIGITAL EQUIPMENT CORPORATION"

REVISIONS		
CHK	CHANGE NO.	REV
	00002	B
BRUCKERT		

DRW. 27-JUN-75 | ENG. | DATE | CHK'D | DATE | BOARD LOCATION: | SHEET 1 OF 1

DLH5RC4.426J | 27-JUN-75 10:56 | NEXT HIGHER ASSEMBLY: B-DD-M8550-0

FIRST USED ON OPTION/MODEL: KL10

TITLE: IBUS ADAPTER DATA PATH

SIZE	CODE	NUMBER	REV.
D	CS	M8550-0-DLH5	B

NP

459

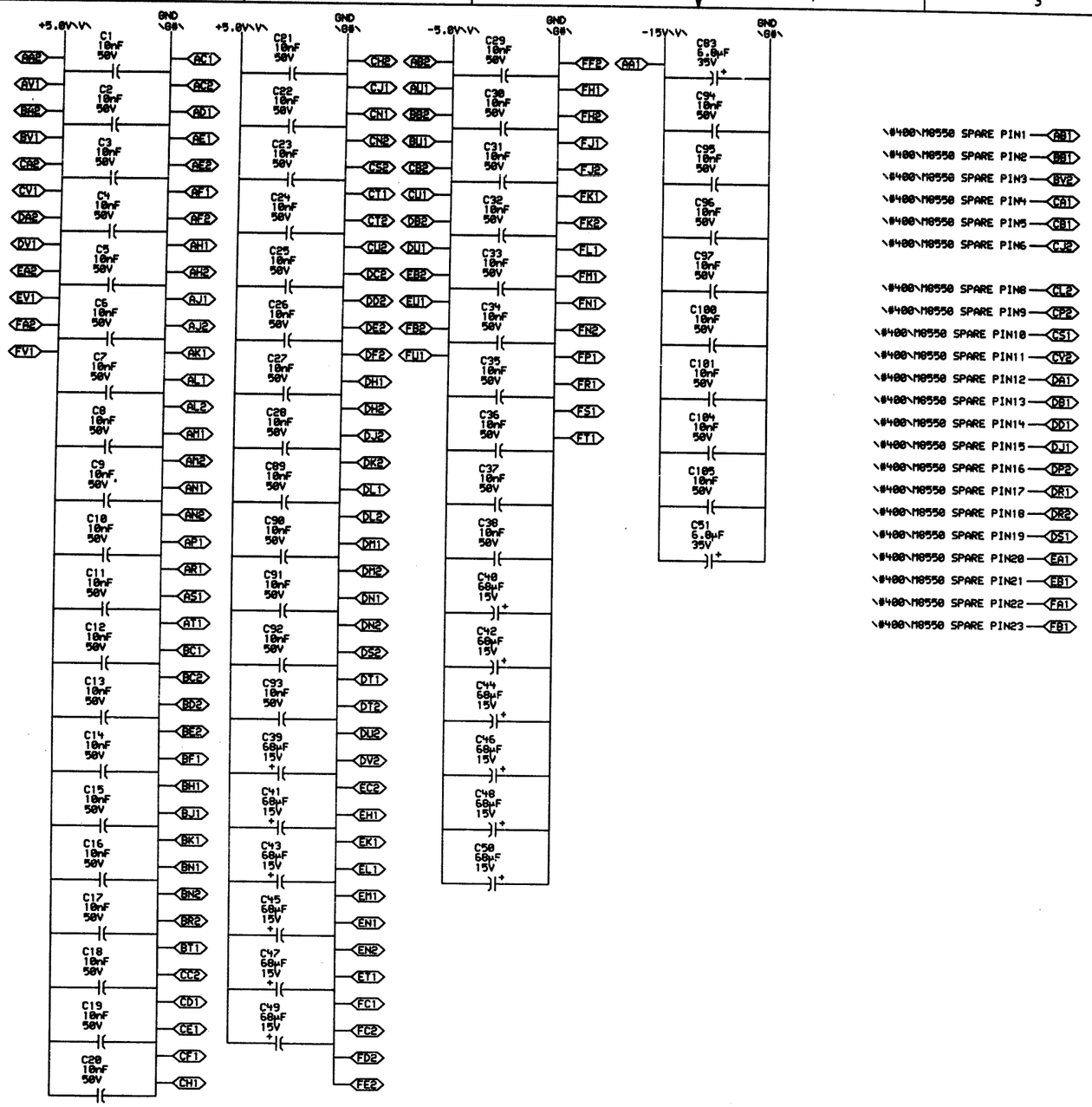

NOTE:

1. ALL 74H SERIES LOGIC IS TO BE 1074H SERIES
2. THE FOLLOWING PIN NUMBERS APPLY TO TTL DIP PACKAGES:

GND	+5.0V	PACKAGE TYPE
8	16	16 PIN DIP
7	14	14 PIN DIP

\#400\M8550 SPARE PIN1 — AB1
\#400\M8550 SPARE PIN2 — BB1
\#400\M8550 SPARE PIN3 — BV2
\#400\M8550 SPARE PIN4 — CA1
\#400\M8550 SPARE PIN5 — CB1
\#400\M8550 SPARE PIN6 — CJ2

\#400\M8550 SPARE PIN8 — CL2
\#400\M8550 SPARE PIN9 — CP2
\#400\M8550 SPARE PIN10 — CS1
\#400\M8550 SPARE PIN11 — CV2
\#400\M8550 SPARE PIN12 — DA1
\#400\M8550 SPARE PIN13 — DB1
\#400\M8550 SPARE PIN14 — DD1
\#400\M8550 SPARE PIN15 — DJ1
\#400\M8550 SPARE PIN16 — DP2
\#400\M8550 SPARE PIN17 — DR1
\#400\M8550 SPARE PIN18 — DR2
\#400\M8550 SPARE PIN19 — DS1
\#400\M8550 SPARE PIN20 — EA1
\#400\M8550 SPARE PIN21 — EB1
\#400\M8550 SPARE PIN22 — FA1
\#400\M8550 SPARE PIN23 — FB1

"THIS DRAWING AND SPECIFICATIONS, HEREIN, ARE THE PROPERTY OF DIGITAL EQUIPMENT CORPORATION AND SHALL NOT BE REPRODUCED OR COPIED OR USED IN WHOLE OR IN PART AS THE BASIS FOR THE MANUFACTURE OR SALE OF ITEMS WITHOUT WRITTEN PERMISSION.
COPYRIGHT © 1975, DIGITAL EQUIPMENT CORPORATION"

REVISIONS		
CHK	CHANGE NO.	REV
DB	00002	B
BRUCKERT 9-16-75		

digital

DRN. DATE 27-JUN-75
CHK'D DATE 27-JUN-75
ENG. DATE
DLH6RC(4.426) 27-JUN-75 11:00
BOARD LOCATION:
SHEET 1 OF 1
FIRST USED ON OPTION/MODEL: KL10
NEXT HIGHER ASSEMBLY: B-DD-M8550-0

TITLE: IBUS ADAPTOR POWER AND GROUND

SIZE	CODE	NUMBER	REV.
D	CS	M8550-0-DLH6	B

REVISION CONTROL SHEET

CUSTOMER PRINT SET	MFG SET	DRAWING NO	NO OF SHT	DESCRIPTION	OPTION NO/FILE DATE	REVISIONS		
			-	MODULE REVISION		A	B	C
		D-UA-M8551-Ø-Ø	5	CONTROL BD FOR KL1Ø I/O ADAPTER		-	A	B
		D-CS-M8551-Ø-CL1		I/O BUS ADAPTER CONTROL INTERFACE		-	A	B
		D-CS-M8551-Ø-CL2	1	I/O BUS ADAPTER CONTROL INTERFACE		-	A	A
		D-CS-M8551-Ø-CL3	1	I/O BUS ADAPTER CONTROL INTERFACE		-	A	B
		D-CS-M8551-Ø-CL4	1	I/O BUS ADAPTER CONTROL INTERFACE		-	A	B
		D-CS-M8551-Ø-CL5	1	I/O BUS ADAPTER CAPS		-	A	A
		K-CO-M8551-Ø-4	1	CONTROL BD FOR KL1Ø I/O ADAPTER		B	B	B
		D-AH-M8551-Ø-5	2	CONTROL BD FOR KL1Ø I/O ADAPTER		A	A	A
		E-MD-7606166-0-0	6	MULTI-LAYER QUAD PANEL DATA		#	#	#
		B-MH-M8551-Ø-6	1	MODULE ECO HISTORY		-	A	B
		5010518	-	ETCH CIRCUIT BOARD		B	B	B
		P00-M8551-ØØ		PROCESS SHEET (REF ONLY)			-	

CUSTOMER PRINT SET CODES
X = PRINT OF DOCUMENT INCLUDED IN PRINT SET
C = INCLUDES ALL PRINTS INDICATED ON DOCUMENT
S = CONFIDENTIAL AUTHORIZED SIGNATURE REQUIRED

ECO NO	ORIG	00001	00002

TITLE		SIZE	CODE	NUMBER	REV
CONTROL BD FOR KL1Ø I/O ADAPTER	SHEET 2 OF 2	B	DD	M8551-Ø	B

481

MR

THIS DRAWING AND SPECIFICATIONS, HEREIN, ARE THE PROPERTY OF DIGITAL EQUIPMENT CORPORATION, AND SHALL NOT BE REPRODUCED OR COPIED OR USED IN WHOLE OR IN PART AS THE BASIS FOR THE MANUFACTURE OR SALE OF ITEMS WITHOUT WRITTEN PERMISSION. COPYRIGHT © 1975 DIGITAL EQUIPMENT CORPORATION

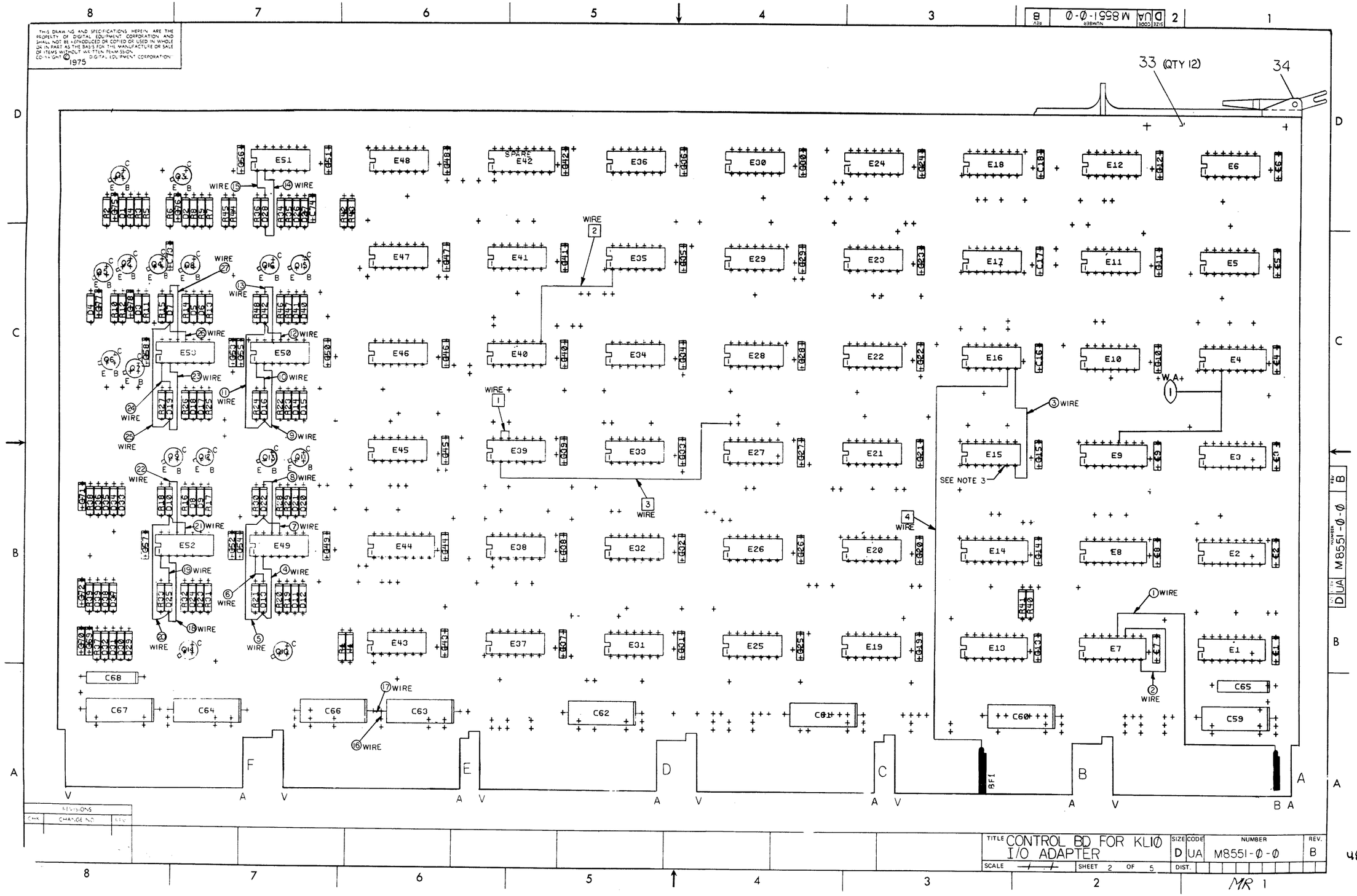

REVISIONS		
CHK	CHANGE NO	REV

TITLE	SIZE	CODE	NUMBER	REV.
CONTROL BD FOR KL10 I/O ADAPTER	D	UA	M8551-0-0	B
SCALE — / —	SHEET 2 OF 5	DIST.		

MR 1

482

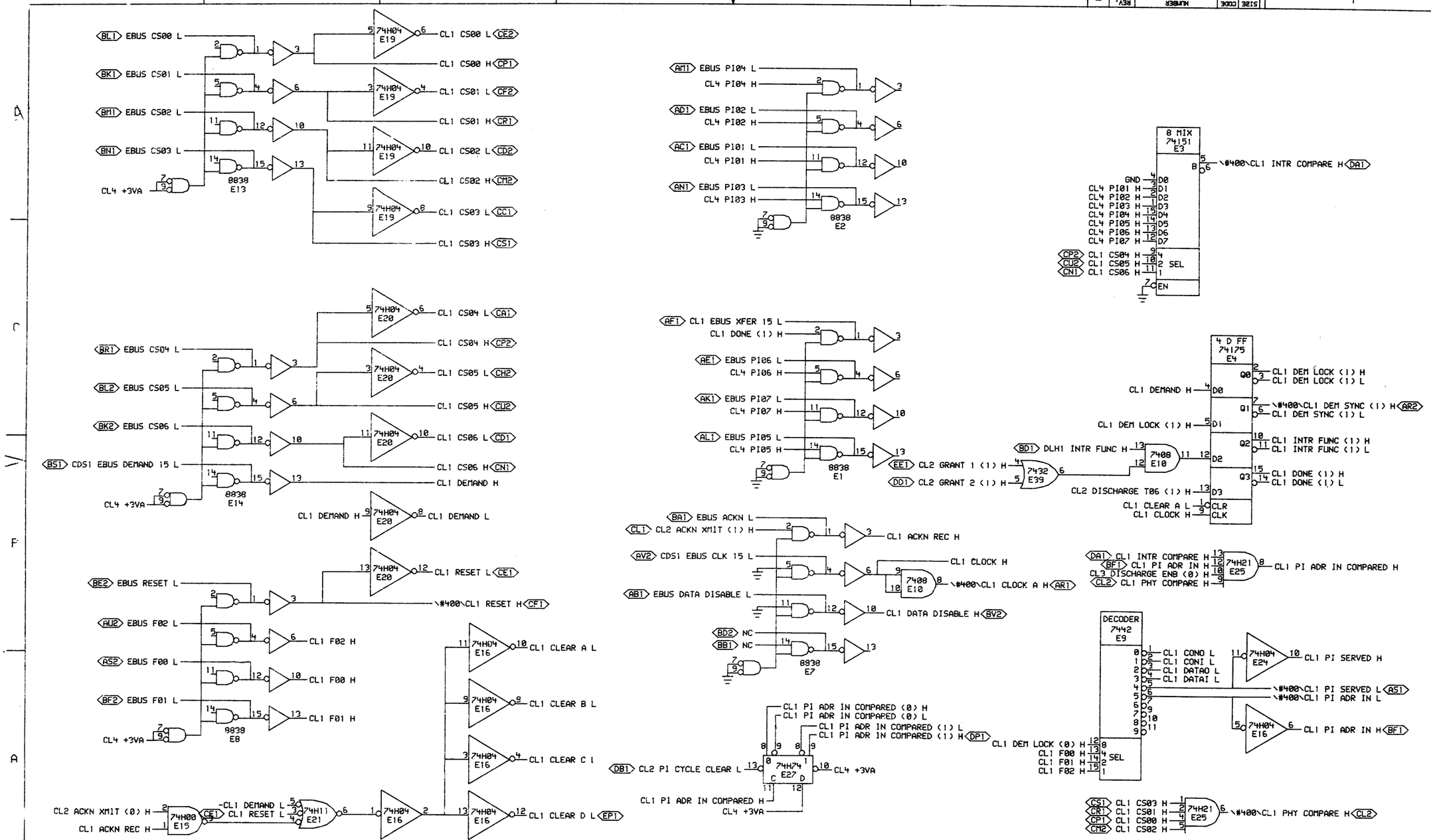

"THIS DRAWING AND SPECIFICATIONS, HEREIN, ARE THE PROPERTY OF DIGITAL EQUIPMENT CORPORATION AND SHALL NOT BE REPRODUCED OR COPIED OR USED IN WHOLE OR IN PART AS THE BASIS FOR THE MANUFACTURE OR SALE OF ITEMS WITHOUT WRITTEN PERMISSION. COPYRIGHT © 1975, DIGITAL EQUIPMENT CORPORATION"

REVISIONS		
CHK	CHANGE NO.	REV

M8551-000002 B
W. BRUCKERT

digital

DRW. 24-OCT-75
ENG. W. Bruckert
DATE 11/14/75
CHK
DATE 11/14/75
BOARD LOCATION: 1AE15
SHEET 1 OF 1
CL1[4,426] 16-OCT-75 13:02
NEXT HIGHER ASSEMBLY: B-DD-M8551-0
FIR T USED ON OPTION/MODEL: DIA20

TITLE: I/O BUS ADAPTER CONTROL INTERFACE

SIZE	CODE	NUMBER	REV.
D	CS	M8551-0-CL1	B

1 OF 5

1 MR

483

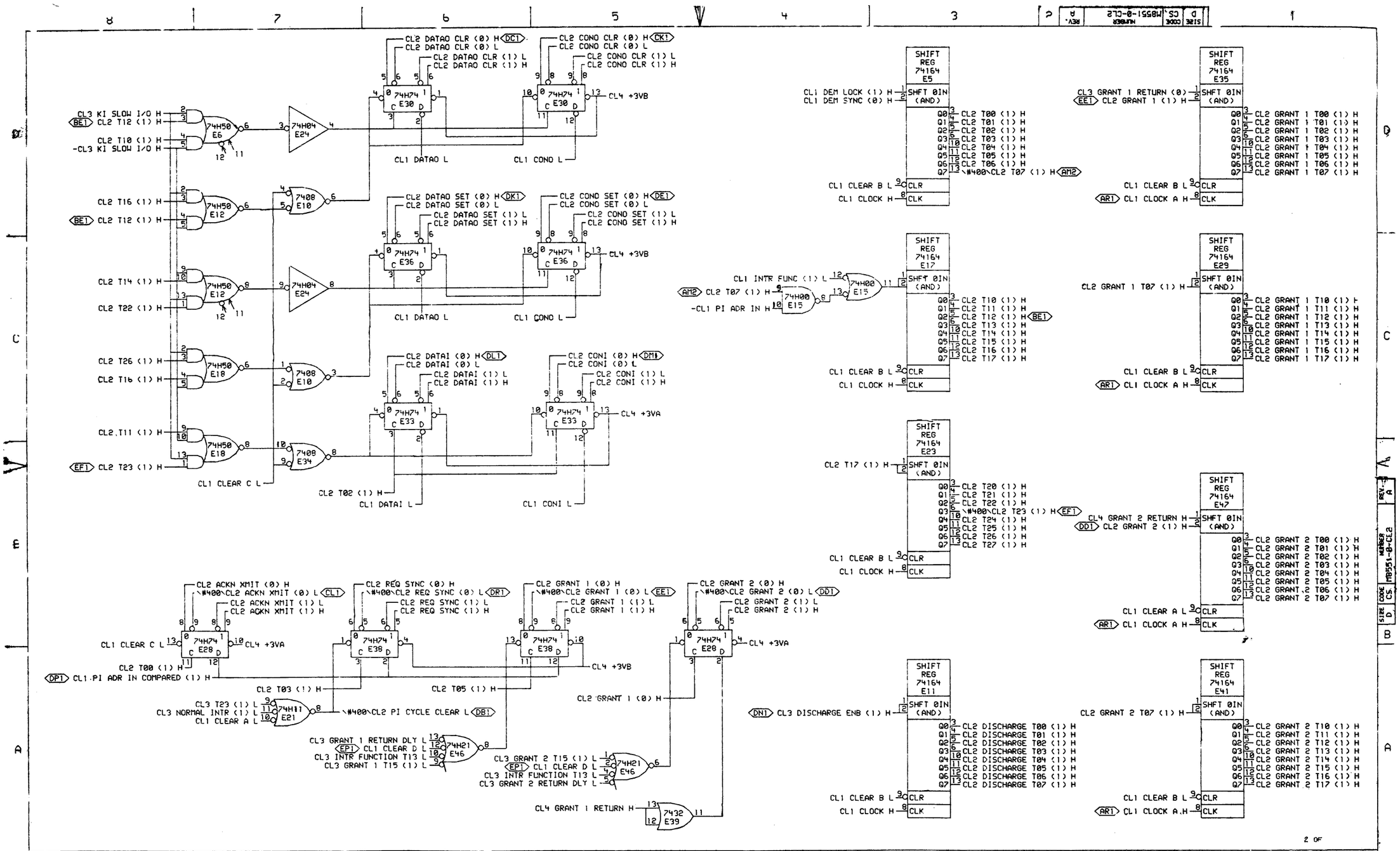

*THIS DRAWING AND SPECIFICATIONS, HEREIN, ARE THE PROPERTY OF DIGITAL EQUIPMENT CORPORATION AND SHALL NOT BE REPRODUCED OR COPIED OR USED IN WHOLE OR IN PART AS THE BASIS FOR THE MANUFACTURE OR SALE OF ITEMS WITHOUT WRITTEN PERMISSION.
COPYRIGHT © 1975, DIGITAL EQUIPMENT CORPORATION*

REVISIONS		
CHK	CHANGE NO.	REV
	00001	A
W. BRUCKET		

digital

DRN. L. Foody DATE 5/19/75 ENG. W. Bruckel DATE 5/19/75
CHK'D DATE 5-19-75
CL2[4,426] 15-MAY-75 09:02 BOARD LOCATION: 1AF15 SHEET 1 OF 1
FIRST USED ON OPTION/MODEL: DIA20 NEXT HIGHER ASSEMBLY: B-DD-M8551-0

TITLE: I/O BUS ADAPTER CONTROL INTERFACE

SIZE	CODE	NUMBER	REV
D	CS	M8551-0-CL2	A

484

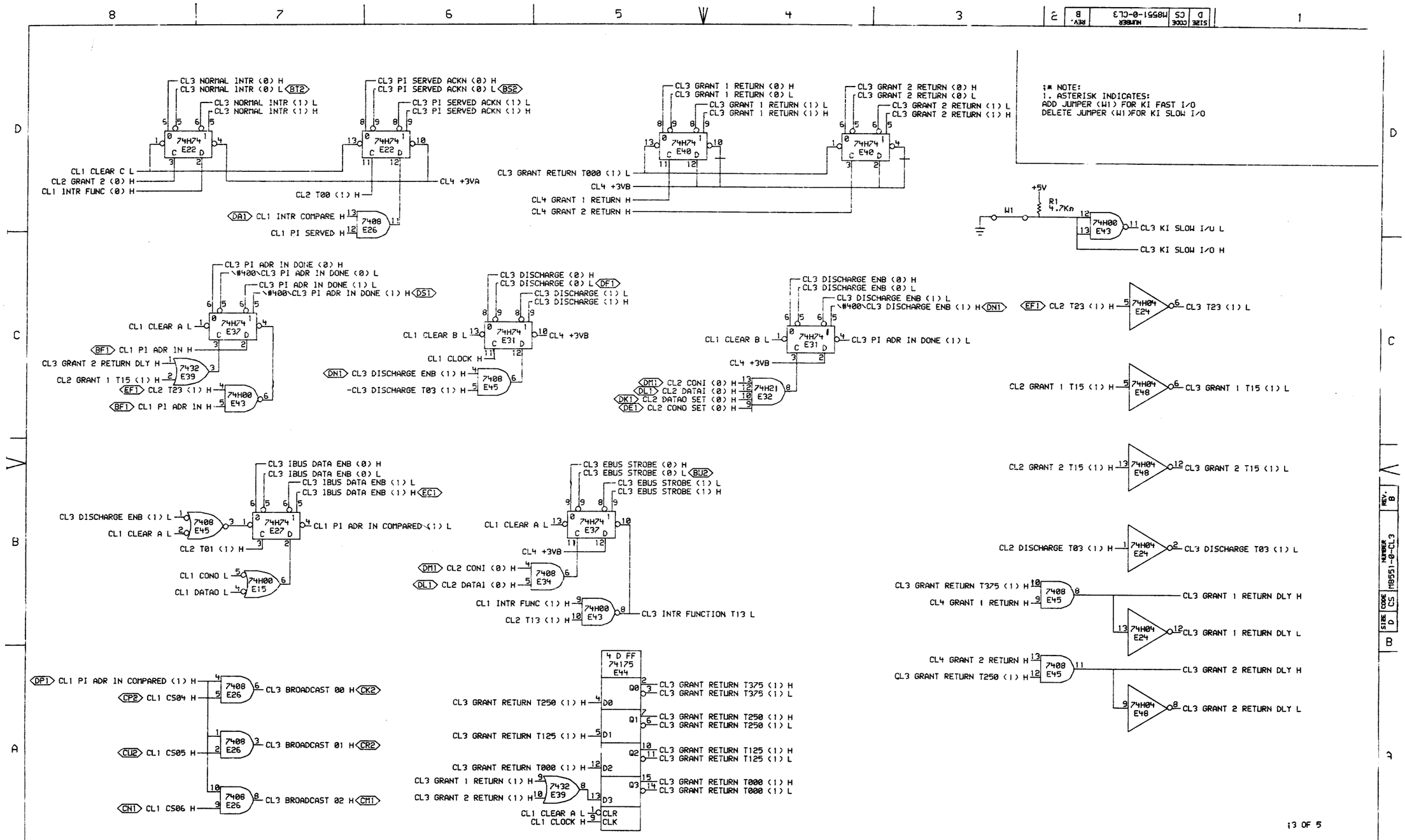

"THIS DRAWING AND SPECIFICATIONS, HEREIN, ARE THE PROPERTY OF DIGITAL EQUIPMENT CORPORATION AND SHALL NOT BE REPRODUCED OR COPIED OR USED IN WHOLE OR IN PART AS THE BASIS FOR THE MANUFACTURE OR SALE OF ITEMS WITHOUT WRITTEN PERMISSION.
COPYRIGHT © 1975, DIGITAL EQUIPMENT CORPORATION"

REVISIONS			M8551-00002 B
CHK	CHANGE NO.	REV	W.BRUCKERT

digital

DRN. L. Loomis	DATE 24-OCT-75	ENG. W. Bruckert	DATE 11/14/75
CHK'D. W. Alphonso	DATE 11/14/75	BOARD LOCATION: 1AF15	
CL3C4,426J	23-OCT-75 14:25	SHEET 1 OF 1	
FIRST USED ON OPTION/MODEL: DIA20		NEXT HIGHER ASSEMBLY: B-DD-M8551-0	

TITLE: I/O BUS ADAPTER CONTROL INTERFACE

SIZE	CODE	NUMBER	REV.
D	CS	M8551-0-CL3	B

485

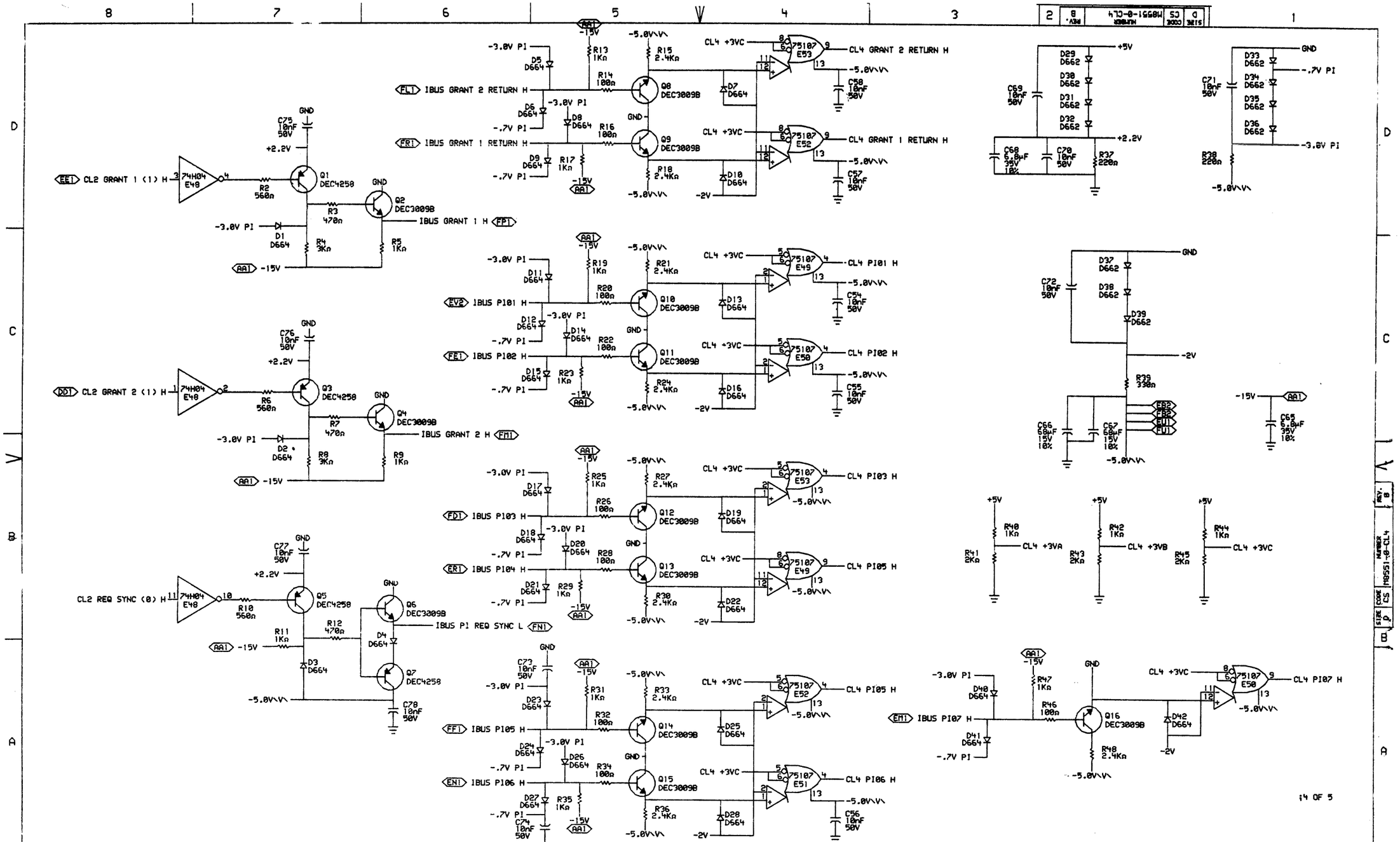

"THIS DRAWING AND SPECIFICATIONS, HEREIN, ARE THE PROPERTY OF DIGITAL EQUIPMENT CORPORATION AND SHALL NOT BE REPRODUCED OR COPIED OR USED IN WHOLE OR IN PART AS THE BASIS FOR THE MANUFACTURE OR SALE OF ITEMS WITHOUT WRITTEN PERMISSION.
COPYRIGHT © 1975, DIGITAL EQUIPMENT CORPORATION"

REVISIONS			M8551-00002 B
CHK	CHANGE NO.	REV	W.BRUCKERT

digital

DRN: 27-OCT-75 | ENG: 27-OCT-75 | DATE: 11/14/75
CHK'D: 11/14/75 | BOARD LOCATION: 1A15
SHEET 1 OF 1
CL4[4,426] 27-OCT-75 09:20 | NEXT HIGHER ASSEMBLY: B-DD-M8551-0
FIRST USED ON OPTION/MODEL: DIA20

TITLE: I/O BUS ADAPTER CONTROL INTERFACE

SIZE	CODE	NUMBER	REV.
D	CS	M8551-0-CL4	B

NOTE:

1. ALL 74H SERIES LOGIC IS TO BE 1074H SERIES
2. THE FOLLOWING PIN NUMBERS APPLY TO TTL DIP PACKAGES:

GND	+5.0V	PACKAGE TYPE
16	8	16 PIN DIP
14	7	14 PIN DIP

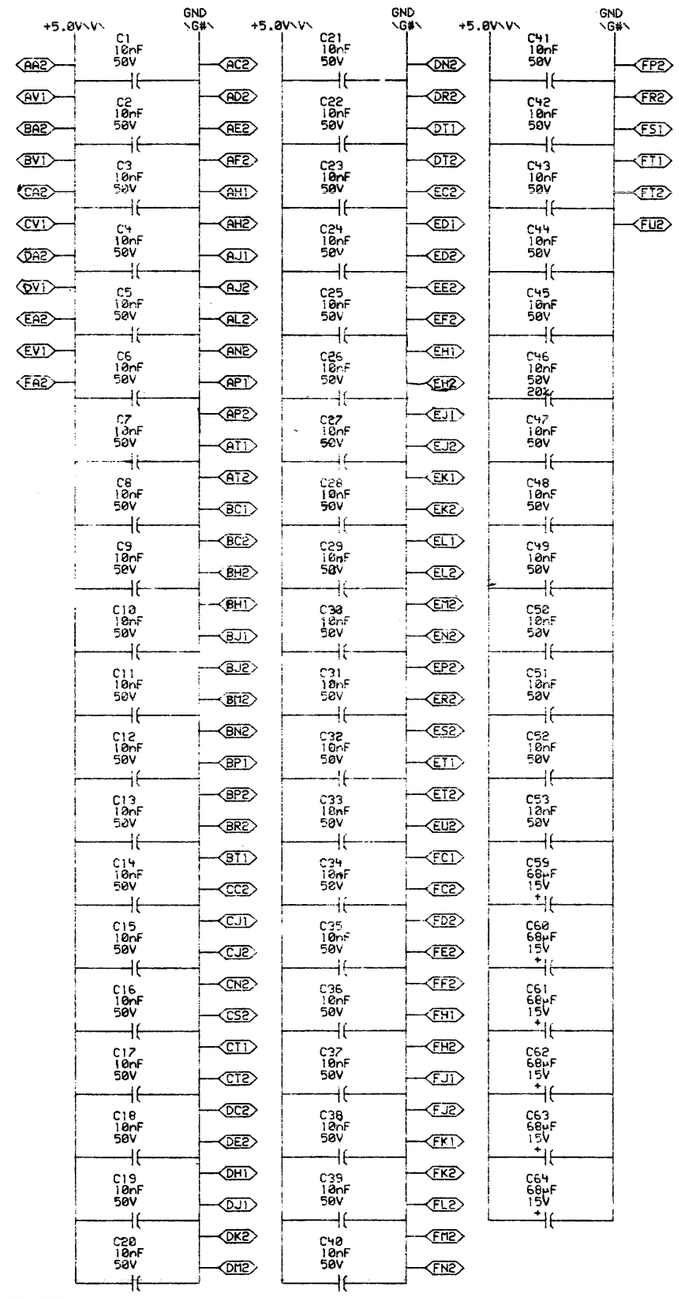

AK2 — [B,GND\G\,NC]
AB2 — [B,NC,-5.0V\V\]
AU1 — [B,NC,-5.0V\V\]
BB2 — [B,NC,-5.0V\V\]
BU1 — [B,NC,-5.0V\V\]
CB1 — SPARE PIN1 M8551\#400\
CB2 — [B,NC,-5.0V\V\]
CH1 — [B,NC,GND\G\]
CU1 — [B,NC,-5.0V\V\]
CV2 — SPARE PIN2 M8551\#400\
DB2 — [B,NC,-5.0V\V\]
DD2 — SPARE PIN3 M8551\#400\
DF2 — SPARE PIN4 M8551\#400\
DH2 — SPARE PIN5 M8551\#400\
DJ2 — SPARE PIN6 M8551\#400\
DL2 — SPARE PIN7 M8551\#400\
DP2 — SPARE PIN8 M8551\#400\
DS2 — SPARE PIN9 M8551\#400\
DU1 — [B,NC,-5.0V\V\]
DU2 — SPARE PIN10 M8551\#400\
DV2 — SPARE PIN11 M8551\#400\
EA1 — SPARE PIN12 M8551\#400\
EB1 — SPARE PIN13 M8551\#400\
ES1 — [B,NC,GND\G\]
FA1 — SPARE PIN14 M8551\#400\
FB1 — SPARE PIN15 M8551\#400\
FS2 — [B,NC,GND\G\]
FV1 — [B,NC,+5.0V\V\]
FV2 — SPARE PIN16 M8551\#400\

;5 OF 5

"THIS DRAWING AND SPECIFICATIONS, HEREIN, ARE THE PROPERTY OF DIGITAL EQUIPMENT CORPORATION AND SHALL NOT BE REPRODUCED OR COPIED OR USED IN WHOLE OR IN PART AS THE BASIS FOR THE MANUFACTURE OR SALE OF ITEMS WITHOUT WRITTEN PERMISSION.
COPYRIGHT © 1975, DIGITAL EQUIPMENT CORPORATION".

REVISIONS		
CHK	CHANGE NO.	REV
	00001	A
	W. BRUCKET	

digital

DRN. L. Fomby
CHK'D.
DATE 5/19/75 | ENG. W. Brucket | DATE 5/19/75
DATE 5-19-75 | BOARD LOCATION: 1AF'5
SHEET 1 OF 1
CL5EXL(4,426) 16-MAY-75 11:22
FIRST USED ON OPTION/MODEL: D1A20
NEXT HIGHER ASSEMBLY: B-DD-M8551-0

TITLE: I/O BUS ADAPTER POWER AND GROUND

SIZE	CODE	NUMBER	REV.
D	CS	M8551-0-CL5	A

487

SLOT	H17		H13		H14		H15
PIN SIDE	1	2	1	2	1	2	1
	+ A	+	+	+	+	+	+ A
	B +	+	+	+	+	+	B +
	+ C	+	+	+	+	+	+ C
	D +	+	+	+	+	+	D +
	+ E	+	+	+	+	+	+ E
	F +	+	+	+	+	+	F +
	+ H	+	+	+	+	+	+ H
	J +	+	+	+	+	+	J +
	+ K	+	+	+	+	+	+ K
	L +	+	+	+	+	+	L +
	+ M	+	+	+	+	+	+ M
	N +	+	+	+	+	+	N +
	+ P	+	+	+	+	+	+ P
	R +	+	+	+	+	+	R +
	+ S	+	+	+	+	+	+ S
	T +	+	+	+	+	+	T +

SLOT	J14	J15		J16		J17	
PIN SIDE	2	1	2	1	2	1	2
	+ A	+	+	+	+	+	+ A
	B +	+	+	+	+	+	B +
	+ C	+	+	+	+	+	+ C
	D +	+	+	+	+	+	D +
	+ E	+	+	+	+	+	+ E
	F +	+	+	+	+	+	F +
	+ H	+	+	+	+	+	+ H
	J +	+	+	+	+	+	J +
	+ K	+	+	+	+	+	+ K
	L +	+	+	+	+	+	L +
	+ M	+	+	+	+	+	+ M
	N +	+	+	+	+	+	N +
	+ P	+	+	+	+	+	+ P
	R +	+	+	+	+	+	R +
	+ S	+	+	+	+	+	+ S
	T +	+	+	+	+	+	T +

IBUS CONI L	1H14P1	1J16P2
IBUS CONO CLR L	1H12R2	1J15R1
IBUS CONO SET L	1H13R1	1J14R2
IBUS D00 H	1H12A1	1J14A2
IBUS D01 H	1H12A2	1J15A1
IBUS D02 H	1H12B2	1J15B1
IBUS D03 H	1H13B1	1J15B2
IBUS D04 H	1H13A2	1J16A1
IBUS D05 H	1H14A1	1J16A2
IBUS D06 H	1H14B1	1J16B2
IBUS D07 H	1H14B2	1J17B1
IBUS D08 H	1H15A1	1J17A2
IBUS D09 H	1H12C1	1J14C2
IBUS D10 H	1H12C2	1J13C1
IBUS D11 H	1H12D2	1J15D1
IBUS D12 H	1H13D1	1J15D2
IBUS D13 H	1H13C2	1J16C1
IBUS D14 H	1H14C1	1J16C2
IBUS D15 H	1H14D1	1J16D2
IBUS D16 H	1H14D2	1J17D1
IBUS D17 H	1H15C1	1J17C2
IBUS D18 H	1H12E1	1J14E2
IBUS D19 H	1H12E2	1J15E1
IBUS D20 H	1H12F2	1J15F1
IBUS D21 H	1H13F1	1J15F2
IBUS D22 H	1H13E2	1J16E1
IBUS D23 H	1H14E1	1J16E2
IBUS D24 H	1H14F1	1J16F2
IBUS D25 H	1H14F2	1J17F1
IBUS D26 H	1H15E1	1J17E2
IBUS D27 H	1H12H1	1J14H2
IBUS D28 H	1H12H2	1J15H1
IBUS D29 H	1H11J2	1J15J1
IBUS D30 H	1H13J1	1J15J2
IBUS D31 H	1H13H2	1J16H1
IBUS D32 H	1H14H1	1J16H2
IBUS D33 H	1H14J1	1J16J2
IBUS D34 H	1H14J2	1J17J1
IBUS D35 H	1H15H1	1J17H2

IBUS DATAI L	1H13P2	1J16P1
IBUS DATAO CLR L	1H12P1	1J14P2
IBUS DATAO SET L	1H12P2	1J15P1
IBUS DR SPLIT H	1H13L1	1J15L2
IBUS GRANT 1 H	1H11S2	
IBUS GRANT 1 RETURN H	1H15P1	
IBUS GRANT 2 H	1J15S1	
IBUS GRANT 2 RETURN H	1J17P2	
IBUS IOS 03 H	1H13K2	1J15K1
IBUS IOS 03 L	1H14K1	1J16K2
IBUS IOS 04 H	1H14L1	1J16L2
IBUS IOS 04 L	1H14L2	1J17L1
IBUS IOS 05 H	1H15K1	1J17K2
IBUS IOS 05 L	1H12M1	1J14M2
IBUS IOS 06 H	1H12M2	1J15M1
IBUS IOS 06 L	1H12N2	1J15N1
IBUS IOS 07 H	1H13M1	1J15N2
IBUS IOS 07 L	1H13M2	1J16M1
IBUS IOS 08 H	1H14M1	1J16M2
IBUS IOS 08 L	1H14N1	1J16N2
IBUS IOS 09 H	1H14N2	1J17N1
IBUS IOS 09 L	1H15M1	1J17M2
IBUS PI REQ SYNC L	1H12S1	1J14S2
IBUS PI01 H	1H12T2	1J15T1
IBUS PI02 H	1H13T1	1J15T2
IBUS PI03 H	1H13S2	1J16S1
IBUS PI04 H	1H14S1	1J16S2
IBUS PI05 H	1H14T1	1J16T2
IBUS PI06 H	1H14T2	1J17T1
IBUS PI07 H	1H15S1	1J17S2
IBUS RDI DATA H	1H14R2	1J17R1
IBUS RDI PULSE L	1H14R1	1J16R2
IBUS RESERVE L	1H12K2	1J15K1
IBUS RESET L	1H12K1	1J14K2

"THIS DRAWING AND SPECIFICATIONS, HEREIN, ARE THE PROPERTY OF DIGITAL EQUIPMENT CORPORATION AND SHALL NOT BE REPRODUCED OR COPIED OR USED IN WHOLE OR IN PART AS THE BASIS FOR THE MANUFACTURE OR SALE OF ITEMS WITHOUT WRITTEN PERMISSION. COPYRIGHT © 1975, DIGITAL EQUIPMENT CORPORATION"

REVISIONS		
CHK	CHANGE NO.	REV

digital

DRN. L. Loosky DATE 17-OCT-75 ENG. W. Bruckert DATE 10/20/75
CHK. W. Stephenson DATE 10/20/75 BOARD LOCATION: SHEET OF

TITLE: KL10 I/O BUS CONNECTOR

IBUS[4,426] 14-OCT-75 12:22 NEXT HIGHER ASSEMBLY: B-DD-KL10-0

FIRST USED ON OPTION/MODEL: KL10

SIZE	CODE	NUMBER	REV.
D	IC	KL10-0-IBUS	

488

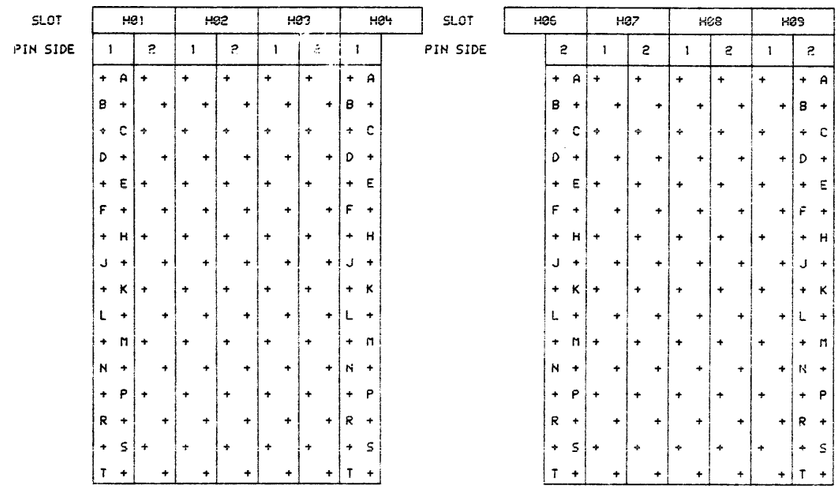

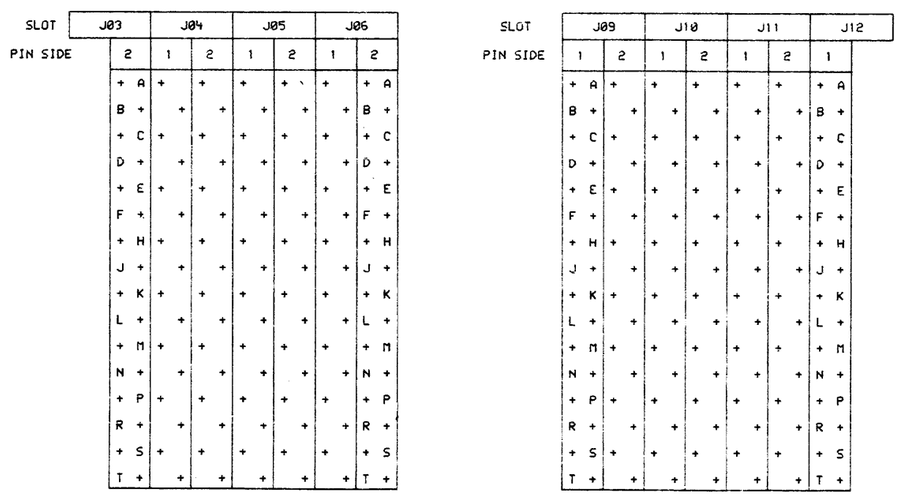

	KBUS0	KBUS1	KBUS2	KBUS3
KBUS"X" ADR ACK (NT) L	1H01A1	1H06A2	1J03A2	1J09A1
KBUS"X" ADR ACK (T) L	1H04C1	1H09C2	1J06C2	1J12C1
KBUS"X" D00 L	1H01K1	1H06K2	1J03K2	1J09K1
KBUS"X" D01 L	1H01K2	1H07K1	1J04K1	1J09K2
KBUS"X" D02 L	1H01L2	1H07L1	1J04L1	1J09L2
KBUS"X" D03 L	1H02L1	1H07L2	1J04L2	1J10L1
KBUS"X" D04 L	1H02K2	1H08K1	1J05K1	1J10K2
KBUS"X" D05 L	1H03K1	1H08K2	1J05K2	1J11K1
KBUS"X" D06 L	1H03L1	1H08L2	1J05L2	1J11L1
KBUS"X" D07 L	1H03L2	1H09L1	1J06L1	1J11L2
KBUS"X" D08 L	1H04K1	1H09K2	1J06K2	1J12K1
KBUS"X" D09 L	1H01M1	1H06M2	1J03M2	1J09M1
KBUS"X" D10 L	1H01M2	1H07M1	1J04M1	1J09M2
KBUS"X" D11 L	1H01N2	1H07N1	1J04N1	1J09N2
KBUS"X" D12 L	1H02N1	1H07N2	1J04N2	1J10N1
KBUS"X" D13 L	1H02M2	1H08M1	1J05M1	1J10M2
KBUS"X" D14 L	1H03M1	1H08M2	1J05M2	1J11M1
KBUS"X" D15 L	1H03N1	1H08N2	1J05N2	1J11N1
KBUS"X" D16 L	1H03N2	1H09N1	1J06N1	1J11N2
KBUS"X" D17 L	1H04M1	1H09M2	1J06M2	1J12M1
KBUS"X" D18 L	1H01P1	1H06P2	1J03P2	1J09P1
KBUS"X" D19 L	1H01P2	1H07P1	1J04P1	1J09P2
KBUS"X" D20 L	1H01R2	1H07R1	1J04R1	1J09R2
KBUS"X" D21 L	1H02R1	1H07R2	1J04R2	1J10R1
KBUS"X" D22 L	1H02P2	1H08P1	1J05P1	1J10P2
KBUS"X" D23 L	1H03P1	1H08P2	1J05P2	1J11P1
KBUS"X" D24 L	1H03R1	1H08R2	1J05R2	1J11R1
KBUS"X" D25 L	1H03R2	1H09R1	1J06R1	1J11R2
KBUS"X" D26 L	1H04P1	1H09P2	1J06P2	1J12P1
KBUS"X" D27 L	1H01S1	1H06S2	1J03S2	1J09S1
KBUS"X" D28 L	1H01S2	1H07S1	1J04S1	1J09S2
KBUS"X" D29 L	1H01T2	1H07T1	1J04T1	1J09T2
KBUS"X" D30 L	1H02T1	1H07T2	1J04T2	1J10T1
KBUS"X" D31 L	1H02S2	1H08S1	1J05S1	1J10S2
KBUS"X" D32 L	1H03S1	1H08S2	1J05S2	1J11S1
KBUS"X" D33 L	1H03T1	1H08T2	1J05T2	1J11T1
KBUS"X" D34 L	1H03T2	1H09T1	1J06T1	1J11T2
KBUS"X" D35 L	1H04S1	1H09S2	1J06S2	1J12S1
KBUS"X" DATA WARNING L	1H04A1	1H09A2	1J06A2	1J12A1
KBUS"X" IGN PAR PULSE L	1H03J2	1H09J1	1J06J1	1J11J2
KBUS"X" MADR 14 L	1H02C2	1H08C1	1J05C1	1J10C2
KBUS"X" MADR 15 L	1H03C1	1H08C2	1J05C2	1J11C1
KBUS"X" MADR 16 L	1H03D1	1H08D2	1J05D2	1J11D1
KBUS"X" MADR 17 L	1H03D2	1H09D1	1J06D1	1J11D2
KBUS"X" MADR 18 L	1H03B2	1H09B1	1J05B1	1J11B2
KBUS"X" MADR 19 L	1H01C1	1H06C2	1J03C2	1J09C1
KBUS"X" MADR 20 L	1H01D2	1H07D1	1J04D1	1J09D2
KBUS"X" MADR 21 L	1H04H1	1H09H2	1J06H2	1J12H1
KBUS"X" MADR 22 L	1H01E1	1H05E2	1J03E2	1J09E1
KBUS"X" MADR 23 L	1H01E2	1H07E1	1J04E1	1J09E2
KBUS"X" MADR 24 L	1H01F2	1H07F1	1J04F1	1J09F2
KBUS"X" MADR 25 L	1H02F1	1H07F2	1J04F2	1J10F1
KBUS"X" MADR 26 L	1H02E2	1H08E1	1J05E1	1J10E2
KBUS"X" MADR 27 L	1H03E1	1H08E2	1J05E2	1J11E1
KBUS"X" MADR 28 L	1H03F1	1H08F2	1J05F2	1J11F1
KBUS"X" MADR 29 L	1H03F2	1H09F1	1J06F1	1J11F2
KBUS"X" MADR 30 L	1H04E1	1H09E2	1J06E2	1J12E1
KBUS"X" MADR 31 L	1H01H1	1H06H2	1J03H2	1J09H1
KBUS"X" MADR 32 L	1H01H2	1H07H1	1J04H1	1J09H2
KBUS"X" MADR 33 L	1H01J2	1H07J1	1J04J1	1J09J2
KBUS"X" MADR 34 L	1H02J1	1H07J2	1J04J2	1J10J1
KBUS"X" MADR 35 L	1H02H2	1H08H1	1J05H1	1J10H2
KBUS"X" MADR RD RQ L	1H03H1	1H06H2	1J05H2	1J11H1
KBUS"X" MADR WR RQ L	1H03J1	1H08J2	1J05J2	1J11J1
KBUS"X" MBD PAR L	1H02B1	1H07B2	1J04B2	1J10B1
KBUS"X" MBI SEQ RQ L	1H02D1	1H07D2	J04D2	1J10D1
KBUS"X" RD RS L	1H01A2	1H07A1	1J04A1	1J09A2
KBUS"X" RQ CYC FAST L	1H03A1	1H08A2	1J05A2	1J11A1
KBUS"X" RQ CYC INM L	1H02A2	1H08A1	1J05A1	1J10A2
KBUS"X" RQ CYC SLOW L	1H03B1	1H08B2	1J05B2	1J11B1
KBUS"X" WR RS L	1H01B2	1H07B1	1J04B1	1H09B2

"THIS DRAWING AND SPECIFICATIONS, HEREIN, ARE THE PROPERTY OF DIGITAL EQUIPMENT CORPORATION AND SHALL NOT BE REPRODUCED OR COPIED OR USED IN WHOLE OR IN PART AS THE BASIS FOR THE MANUFACTURE OR SALE OF ITEMS WITHOUT WRITTEN PERMISSION.
COPYRIGHT © 1975, DIGITAL EQUIPMENT CORPORATION"

REVISIONS

CHK	CHANGE NO.	REV

DRN. DATE 17-OCT-75 ENG. DATE 10/20/75
CHK DATE 10/20/75
BOARD LOCATION: SHEET OF
MBUSC4,4,26] 18-OCT-75 13:42
FIRST USED ON OPTION/MODEL: KL10
NEXT HIGHER ASSEMBLY: B-DD-KL10-0

TITLE: KL10 MEMORY BUS CONNECTORS

SIZE	CODE	NUMBER
D	IC	KL10-0-MBUS

409

"THIS DRAWING AND SPECIFICATIONS, HEREIN, ARE THE PROPERTY OF DIGITAL EQUIPMENT CORPORATION AND SHALL NOT BE REPRODUCED OR COPIED OR USED IN WHOLE OR IN PART AS THE BASIS FOR THE MANUFACTURE OR SALE OF ITEMS WITHOUT WRITTEN PERMISSION.
COPYRIGHT © 1975 DIGITAL EQUIPMENT CORPORATION"

A	B	1	2	3	4	5	6	7	8	9	10	11	12	13	14	15	16
	(M9009)	0X8P0B															B0—A (M9209)
C	(M9009)	0X8N0B	M	M	M	M	M	M	M	M	M	M	EMPTY	M	M	M	B0—A (M9209)
D		DEDI-UG															DEDI-UG
E																	

FIRST USED ON OPTION/MODEL	QTY.	DESCRIPTION	PART NO.	ITEM NO.
KLIØ		PARTS LIST		

DIMENSIONAL TOLERANCE				
DIMENSIONS ARE MILLIMETERS / INCHES UNLESS OTHERWISE SPECIFIED				
MILLIMETERS	INCHES	ANGLES		
X.XX = ±0.10 X.X = ±0.5 X = ±2.	.XXX = ±.005 .XX = ±.02 .X = ±.1	±0° 30'		
THIRD ANGLE PROJECTION	REMOVE BURRS AND BREAK SHARP CORNERS SURFACE QUALITY ✓			
	MATERIAL			
	FINISH			

DRN.	DATE 6-5-75	digital
CHK'D.	DATE 6-5-75	
ENG.	DATE	TITLE MODULE UTILIZATION BAY 1
PROJ. ENG.	DATE	
PROD.	DATE	
NEXT HIGHER ASSY.	D-UA-KLIØ-Ø-Ø	
SCALE		
SHEET 1 OF 1		

SIZE	CODE	NUMBER	REV.
C	MU	KLIØ-Ø-BAY1	
DIST.			

REVISIONS		
CHK	CHANGE NO.	REV.

SIZE	CODE	NUMBER	REV.
C	MU	KLIØ-Ø-BAY1	

490

REVISION CONTROL SHEET

CUSTOMER PRINT SET	MFG SET	DRAWING NO	NO OF SHT	DESCRIPTION	OPTION NO/FILE DATE	REVISIONS					
			-	MODULE REVISION		A	B	B	C	C	
		D-UA-M8558-Ø-Ø	5	KIIØ MEMORY BUS ADAPTER		-	A	B	C	C1	
		D-CS-M8558-Ø-MAØ1	1	KIIØ MEMORY BUS ADAPTER			A	A	B	B1	
		D-CS-M8558-Ø-MAØ2	1	KIIØ MEMORY BUS ADAPTER			A	A	B	B1	
		D-CS-M8558-Ø-MAØ3	1	KIIØ MEMORY BUS ADAPTER			A	A	B	B1	
		D-CS-M8558-Ø-MAØ4	1	KIIØ MEMORY ADAPTER			A	A	B	B1	
		D-CS-M8558-Ø-MAØ5	1	KIIØ MEMORY BUS ADAPTER			A	A	B	B1	
		D-CS-M8558-Ø-MAØ6	1	KI MEM BUS ADPT POWER AND GND			A	A	B	B1	
		K-CO-M8558-Ø-4	1	KIIØ MEMORY BUS ADAPTER		B	B	B	B	B	
		D-AH-M8558-Ø-5	4	KIIØ MEMORY BUS ADAPTER		A	A	A	A	A	
		B-MH-M8558-Ø-6	1	MODULE ECO HISTORY		-	REF			REF	SEE SHEET 3
		5010640	-	ETCH CIRCUIT BOARD			B	B	B	B	B
		P00-M8558-ØØ		PROCESS SHEET (REF ONLY)			-	-	-	-	-
					ECO NO	ORIG	00001	00002	00003	MR004	
										REWORK VERSION	RELAYOUT VERSION

CUSTOMER PRINT SET CODES
X = PRINT OF DOCUMENT INCLUDED IN PRINT SET
C = INCLUDES ALL PRINTS INDICATED ON DOCUMENT
S = CONFIDENTIAL AUTHORIZED SIGNATURE REQUIRED

TITLE		SIZE	CODE	NUMBER	REV
KIIØ MEMORY BUS ADAPTER	SHEET 2 OF 3	B	DD	M8558-Ø	D

491

"THIS DRAWING AND SPECIFICATIONS, HEREIN, ARE THE PROPERTY OF DIGITAL EQUIPMENT CORPORATION AND SHALL NOT BE REPRODUCED OR COPIED OR USED IN WHOLE OR IN PART AS THE BASIS FOR THE MANUFACTURE OR SALE OF ITEMS WITHOUT WRITTEN PERMISSION. COPYRIGHT © 1975 DIGITAL EQUIPMENT CORPORATION"

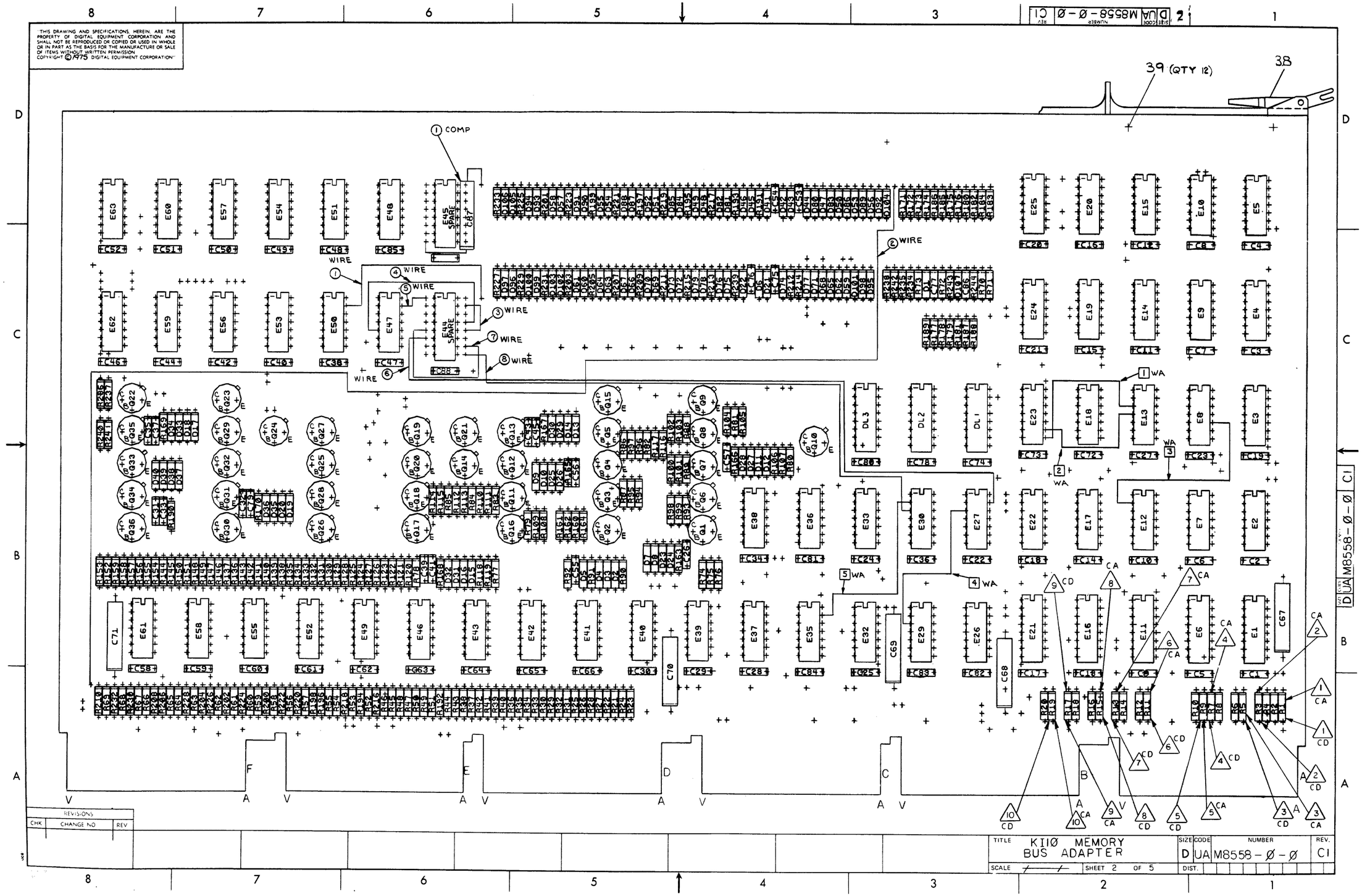

REVISIONS		
CHK	CHANGE NO	REV

TITLE	SIZE	CODE	NUMBER	REV.
KIIØ MEMORY BUS ADAPTER	D	UA	M8558-Ø-Ø	C1
SCALE — / —	SHEET 2 OF 5	DIST.		

462

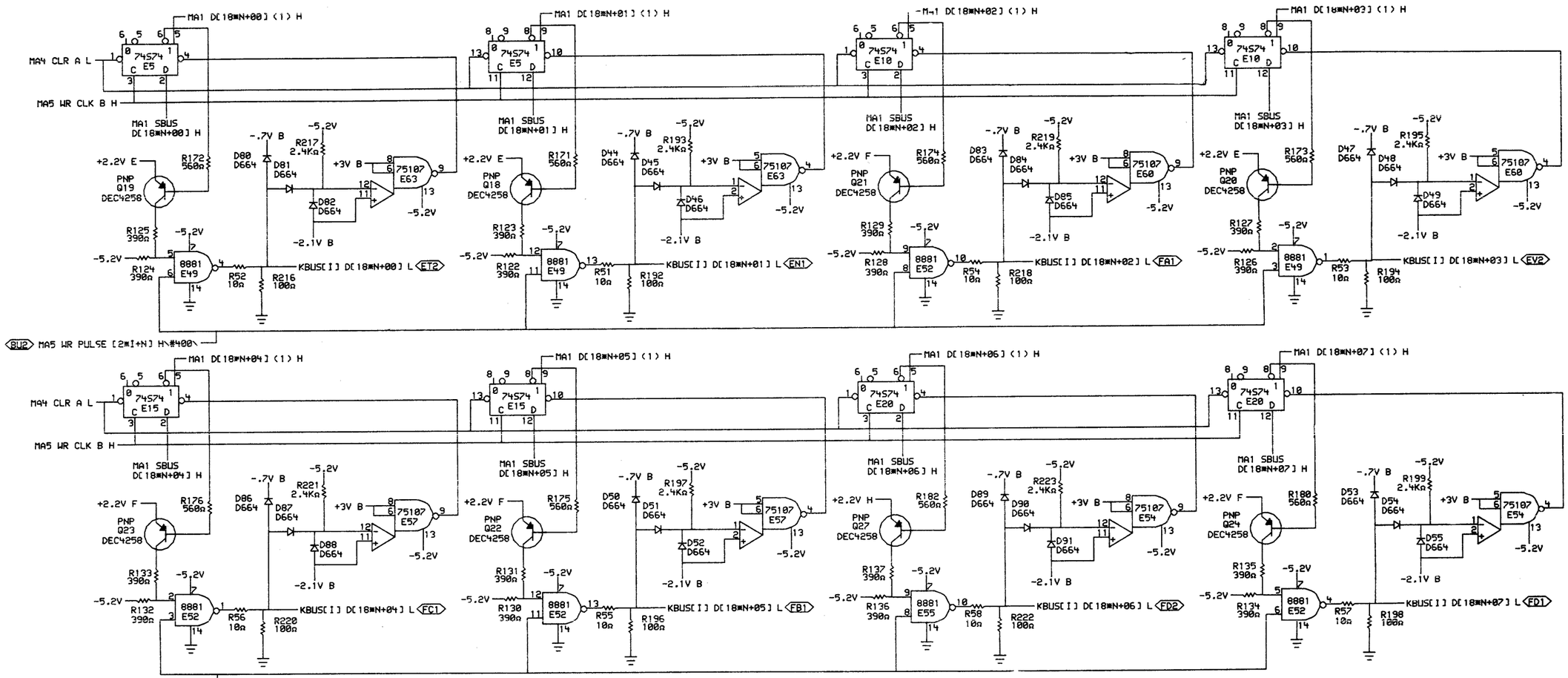

LOCATION	VARIABLES	
1AF04	N=00	I=0
1AF05	N=01	I=0
1AF06	N=00	I=1
1AF07	N=01	I=1
1AF08	N=00	I=2
1AF09	N=01	I=2
1AF10	N=00	I=3
1AF11	N=01	I=3

1 OF 6

*THIS DRAWING AND SPECIFICATIONS, HEREIN, ARE THE PROPERTY OF DIGITAL EQUIPMENT CORPORATION AND SHALL NOT BE REPRODUCED OR COPIED OR USED IN WHOLE OR IN PART AS THE BASIS FOR THE MANUFACTURE OR SALE OF ITEMS WITHOUT WRITTEN PERMISSION.
COPYRIGHT © 1977, DIGITAL EQUIPMENT CORPORATION'

REVISIONS		
CHK	CHANGE NO.	REV
M.V.	M8558-00003	B

M8558 MR004 B1
D.LITWINETZ
B.BRUCKERT

digital

DRN. L. Loosley DATE 27-JAN-77
CHK'D. DATE 1/28/77
ENG. W. Bruckert DATE 7FEB76
NMA01.DRW[4,426] 26-JAN-77 16:50
BOARD LOCATION:
SHEET 1 OF 1
NEXT HIGHER ASSEMBLY: B-DD-M8558-0
FIRST USED ON OPTION/MODEL: KL10

TITLE: KI MEMORY BUS ADAPTER

SIZE	CODE	NUMBER	REV.
D	CS	M8558-0-MA01	B1

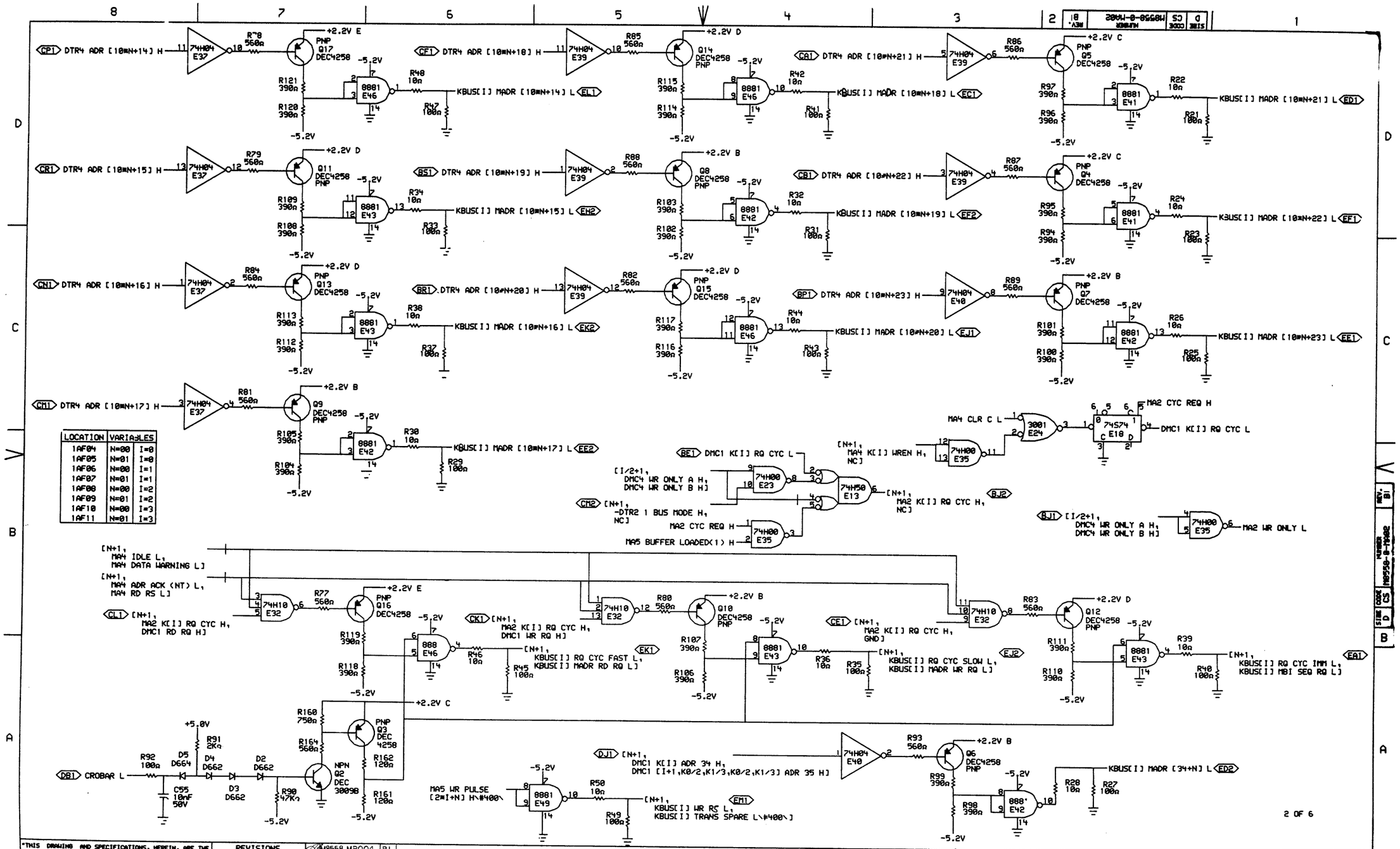

LOCATION	VARIABLES	
1AF04	N=00	I=0
1AF05	N=01	I=0
1AF06	N=00	I=1
1AF07	N=01	I=1
1AF08	N=00	I=2
1AF09	N=01	I=2
1AF10	N=00	I=3
1AF11	N=01	I=3

"THIS DRAWING AND SPECIFICATIONS, HEREIN, ARE THE PROPERTY OF DIGITAL EQUIPMENT CORPORATION AND SHALL NOT BE REPRODUCED OR COPIED OR USED IN WHOLE OR IN PART AS THE BASIS FOR THE MANUFACTURE OR SALE OF ITEMS WITHOUT WRITTEN PERMISSION. COPYRIGHT © 1977, DIGITAL EQUIPMENT CORPORATION"

REVISIONS		
CHK	CH-NGE NO.	REV
	M8558 MR004	B1
	M8558-00003	B

D. LITWINETZ
B. BRUCKERT

DRN.	DATE 27-JAN-77	ENG.	DATE 17 FEB 76
CHK'D.	DATE 1/28/77	BOARD LOCATION: SHEET 1 OF 1	
NMA02.DRW[4,426]	27-JAN-77 11:09	NEXT HIGHER ASSEMBLY:	
FIRST USED ON OPTION/MODEL:	KL10	B-DD-M8558-0	

TITLE: KI MEMORY BUS ADAPTER

SIZE	CODE	NUMBER	REV.
D	CS	M8558-0-MA02	B1

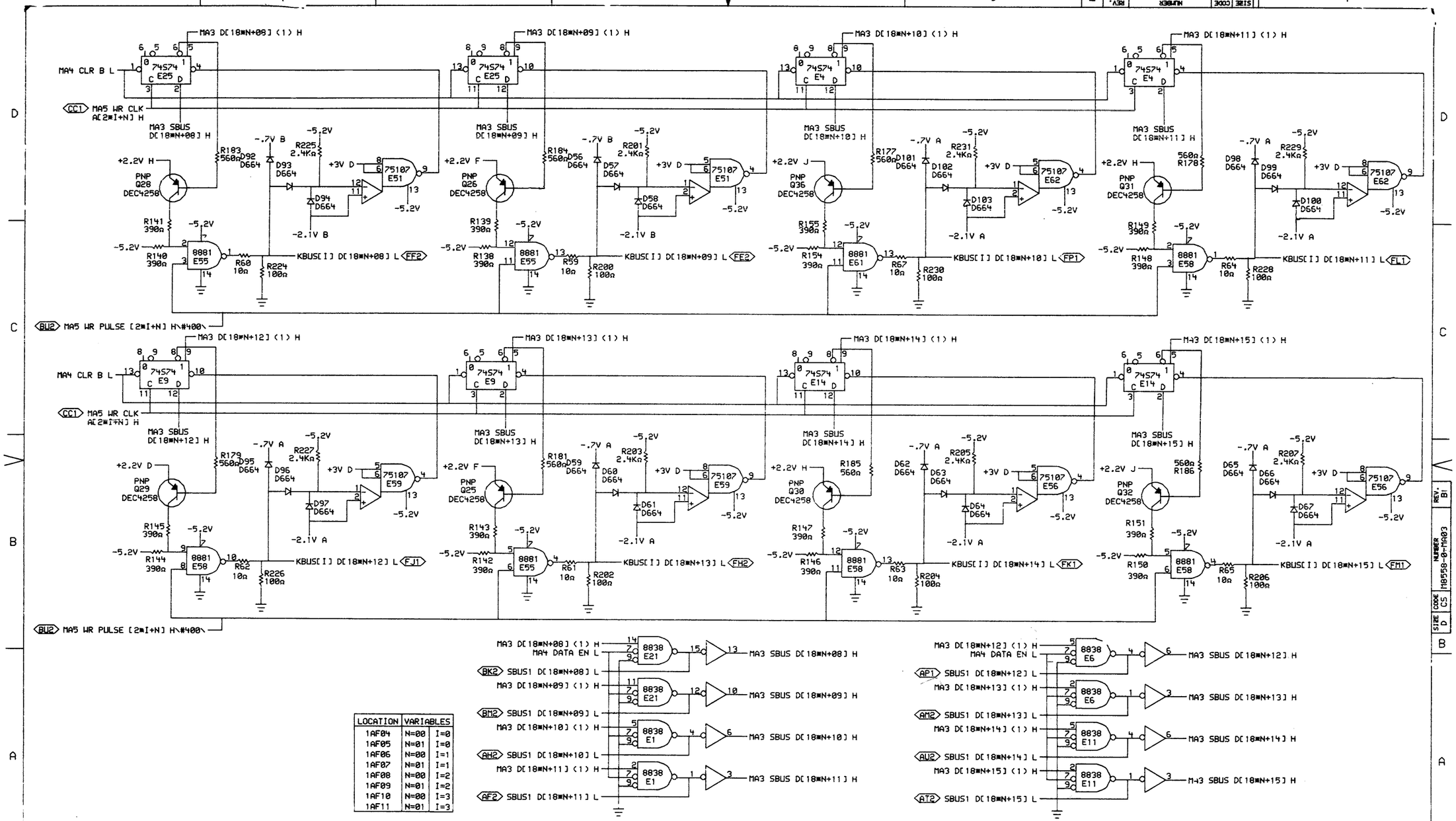

LOCATION	VARIABLES	
1AF04	N=00	I=0
1AF05	N=01	I=0
1AF06	N=00	I=1
1AF07	N=01	I=1
1AF08	N=00	I=2
1AF09	N=01	I=2
1AF10	N=00	I=3
1AF11	N=01	I=3

3 OF 6

"THIS DRAWING AND SPECIFICATIONS, HEREIN, ARE THE PROPERTY OF DIGITAL EQUIPMENT CORPORATION AND SHALL NOT BE REPRODUCED OR COPIED OR USED IN WHOLE OR IN PART AS THE BASIS FOR THE MANUFACTURE OR SALE OF ITEMS WITHOUT WRITTEN PERMISSION. COPYRIGHT © 1977, DIGITAL EQUIPMENT CORPORATION"

REVISIONS		
CHK	CHANGE NO.	REV
	M8558-00003	B

M8558 MR004 B1
D.LITWINETZ
B.BAUCKERT

digital

DRN. | DATE 26-JAN-77 | ENG. | DATE 7FEB76
CHK | DATE | BOARD LOCATION:
SHEET 1 OF 1
NMA03.DRW[4,426] 26-JAN-77 16:51
FIRST USED ON OPTION/MODEL: KL10
NEXT HIGHER ASSEMBLY: B-DD-M8558-0

TITLE: KI MEMORY BUS ADAPTER

SIZE	CODE	NUMBER	REV.
D	CS	M8558-0-MA03	B1

495

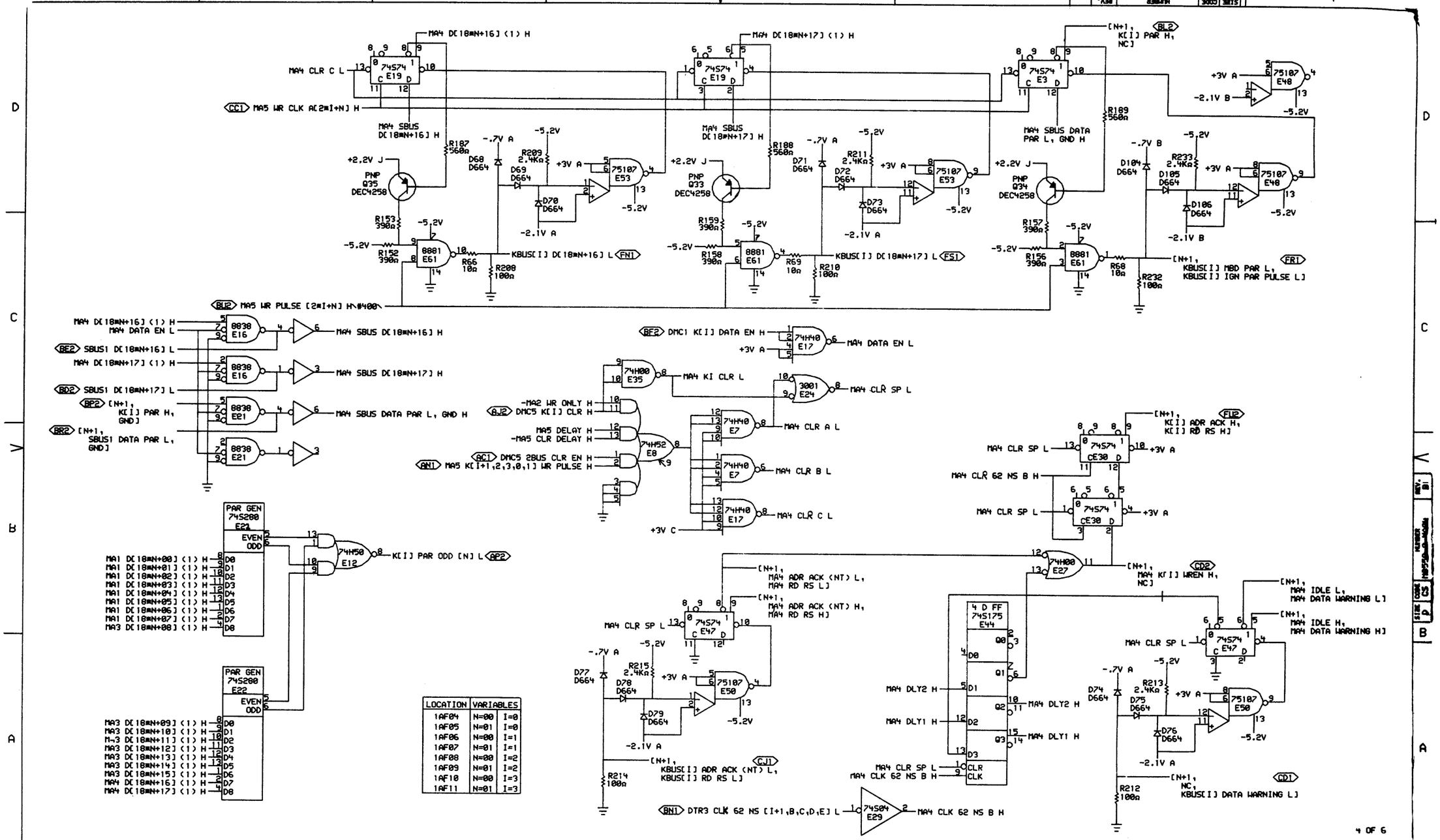

LOCATION	VARIABLES	
1AF04	N=00	I=0
1AF05	N=01	I=0
1AF06	N=00	I=1
1AF07	N=01	I=1
1AF08	N=00	I=2
1AF09	N=01	I=2
1AF10	N=00	I=3
1AF11	N=01	I=3

"THIS DRAWING AND SPECIFICATIONS, HEREIN, ARE THE PROPERTY OF DIGITAL EQUIPMENT CORPORATION AND SHALL NOT BE REPRODUCED OR COPIED OR USED IN WHOLE OR IN PART AS THE BASIS FOR THE MANUFACTURE OR SALE OF ITEMS WITHOUT WRITTEN PERMISSION. COPYRIGHT © 1977, DIGITAL EQUIPMENT CORPORATION"

REVISIONS		
CH.	CHANGE NO.	REV
Q.M.	M8558-00003	B

M8558 MR004 B1

D. LITWINETZ

B. BRUCKERT

digital

DRN. L. Loomby DATE 27-JAN-77 ENG. M. Bruckert DATE 7 FEB 76

CHK'D. W. Stephenson DATE 1/20/77 BOARD LOCATION: SHEET 1 OF 1

NHA04.DRW[4,426] 26-JAN-77 17:54

FIRST USED ON OPTION/MODEL: KL10

NEXT HIGHER ASSEMBLY: B-DD-M8558-0

TITLE: KI MEMORY ADAPNTER

SIZE	CODE	NUMBER	REV.
D	CS	M8558-0-MA04	B1

496

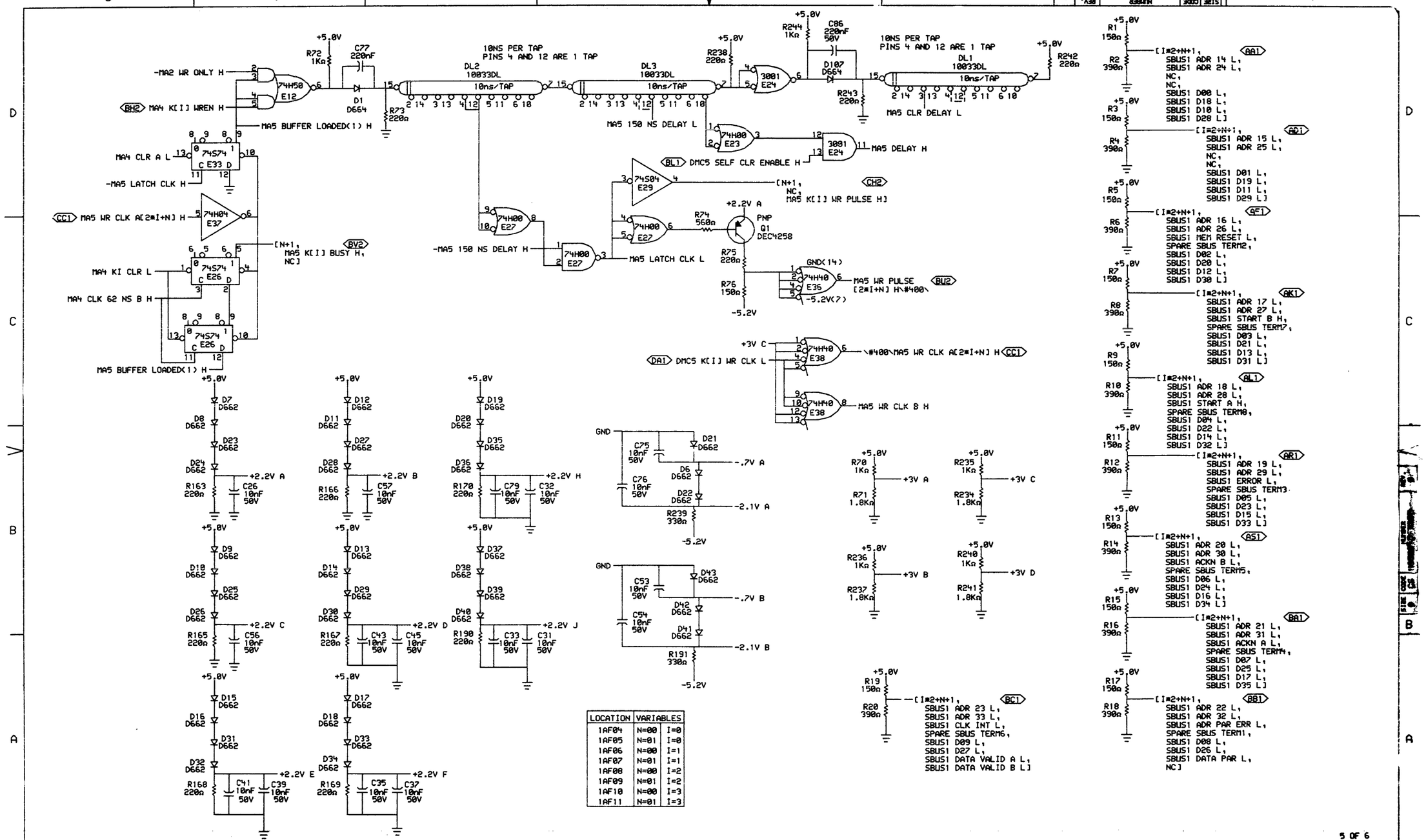

LOCATION	VARIABLES	
1AF04	N=00	I=0
1AF05	N=01	I=0
1AF06	N=00	I=1
1AF07	N=01	I=1
1AF08	N=00	I=2
1AF09	N=01	I=2
1AF10	N=00	I=3
1AF11	N=01	I=3

"THIS DRAWING AND SPECIFICATIONS, HEREIN, ARE THE PROPERTY OF DIGITAL EQUIPMENT CORPORATION AND SHALL NOT BE REPRODUCED OR COPIED OR USED IN WHOLE OR IN PART AS THE BASIS FOR THE MANUFACTURE OR SALE OF ITEMS WITHOUT WRITTEN PERMISSION. COPYRIGHT © 1977, DIGITAL EQUIPMENT CORPORATION"

REVISIONS		
CHK	CHANGE NO.	REV
	M8558-00003	B
	B. BRUCKERT	

M8558 MR004 B1
T. McCallum 17 JAN 78
D. LITWINETZ

digital

DRN. S. Loosley | DATE 27-JAN-77 | ENG. W. Bruckert | DATE 17 FEB 76
CHK'D. | DATE | BOARD LOCATION: | SHEET 1 OF 1
NMA05.DRW[4,426] 27-JAN-77 09:54 | NEXT HIGHER ASSEMBLY: B-DD-M8558-0
FIRST USED ON OPTION/MODEL: KL10

TITLE: KI MEMORY BUS ADAPTER

5 OF 6

SIZE	CODE	NUMBER	REV.
D	CS	M8558-0-MA05	B1

497

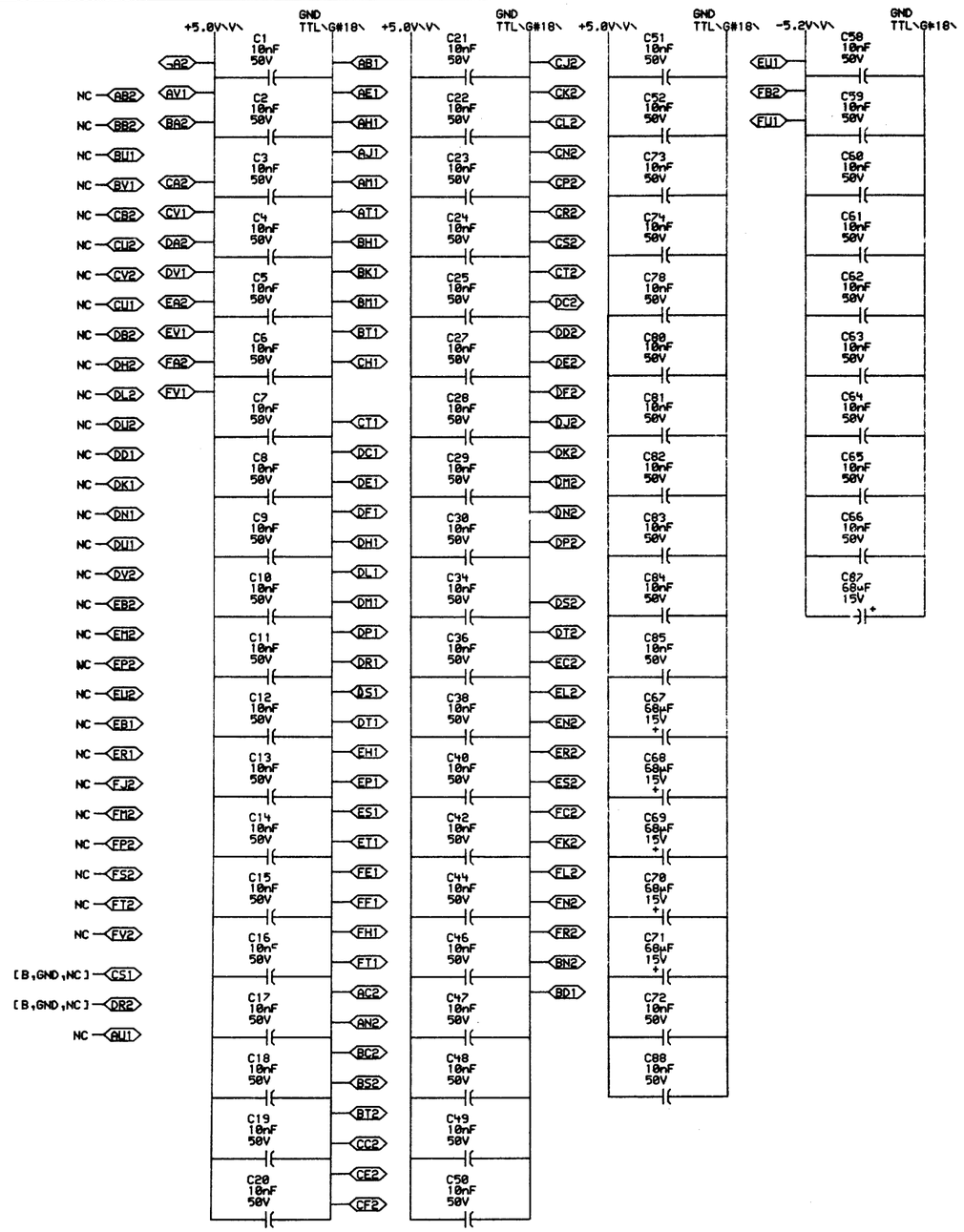

NOTE:

1. ALL 74H SERIES LOGIC IS TO BE 1074H SERIES
2. THE FOLLOWING PIN NUMBERS APPLY TO TTL DIP PACKAGES:

GND	+5.0V	PACKAGE TYPE
8	16	16 PIN DIP
7	14	14 PIN DIP

;6 OF 6

"THIS DRAWING AND SPECIFICATIONS, HEREIN, ARE THE PROPERTY OF DIGITAL EQUIPMENT CORPORATION AND SHALL NOT BE REPRODUCED OR COPIED OR USED IN WHOLE OR IN PART AS THE BASIS FOR THE MANUFACTURE OR SALE OF ITEMS WITHOUT WRITTEN PERMISSION. COPYRIGHT © 1977, DIGITAL EQUIPMENT CORPORATION"

REVISIONS		
NGE NO.	REV	M8558 MR004 B1
58-00003	B	D.LITWINETZ
BUCKERT		

digital

DR. C. Smith	DATE 07-FEB-75	ENG. M. Bambit	DATE 7 Feb 75
CHK'D	DATE 1/27/77	BOARD LOCATION: SHEET 1 OF 1	
MA06EX.DRW[4,426]	28-JAN-77 16:29	NEXT HIGHER ASSEMBLY:	
FIRST USED ON OPTION/MODEL: KL10		B-DD-M8558-0	

TITLE: KI MEM BUS ADPT POWER AND GND

SIZE	CODE	NUMBER	REV.
D	CS	M8558-0-MA06	B1

REVISION CONTROL SHEET

CUSTOMER PRINT SET	MFG SET	DRAWING NO	NO OF SHT	DESCRIPTION	OPTION NO/FILE DATE	REVISIONS (NEW LAYOUT VERSION)
			-	MODULE REVISION		D
		D-UA-M8558-Ø-Ø	5	KI1Ø MEMORY BUS ADAPTER		D
		D-CS-M8558-Ø-MAØ1	1	KI1Ø MEMORY BUS ADAPTER		C
		D-CS-M8558-Ø-MAØ2	1	KI1Ø MEMORY BUS ADAPTER		C
		D-CS-M8558-Ø-MAØ3	1	KI1Ø MEMORY BUS ADAPTER		C
		D-CS-M8558-Ø-MAØ4	1	KI1Ø MEMORY ADAPTER		C
		D-CS-M8558-Ø-MAØ5	1	KI1Ø MEMORY BUS ADAPTER		C
		D-CS-M8558-Ø-MAØ6	1	KI MEM BUS ADPT POWER AND GND		C
		K-CO-M8558-Ø-4	1	KI1Ø MEMORY BUS ADAPTER		C
		D-AH-M8558-Ø-5	4	KI1Ø MEMORY BUS ADAPTER		B
		B-MH-M8558-Ø-6	1	MODULE ECO HISTORY		D
		5010640	-	ETCH CIRCUIT BOARD		C
		P00-M8558-ØØ		PROCESS SHEET (REF ONLY)		-

CUSTOMER PRINT SET CODES
X = PRINT OF DOCUMENT INCLUDED IN PRINT SET
C = INCLUDES ALL PRINTS INDICATED ON DOCUMENT
S = CONFIDENTIAL AUTHORIZED SIGNATURE REQUIRED

ECO NO: MR004

TITLE	SHEET	SIZE	CODE	NUMBER	REV
KL10 MEMORY BUS ADAPTER	3 OF 3	B	DD	M8558-Ø	D

499

THIS DRAWING AND SPECIFICATIONS, HEREIN, ARE THE PROPERTY OF DIGITAL EQUIPMENT CORPORATION AND SHALL NOT BE REPRODUCED OR COPIED OR USED IN WHOLE OR IN PART AS THE BASIS FOR THE MANUFACTURE OR SALE OF ITEMS WITHOUT WRITTEN PERMISSION.
COPYRIGHT © 1977 DIGITAL EQUIPMENT CORPORATION

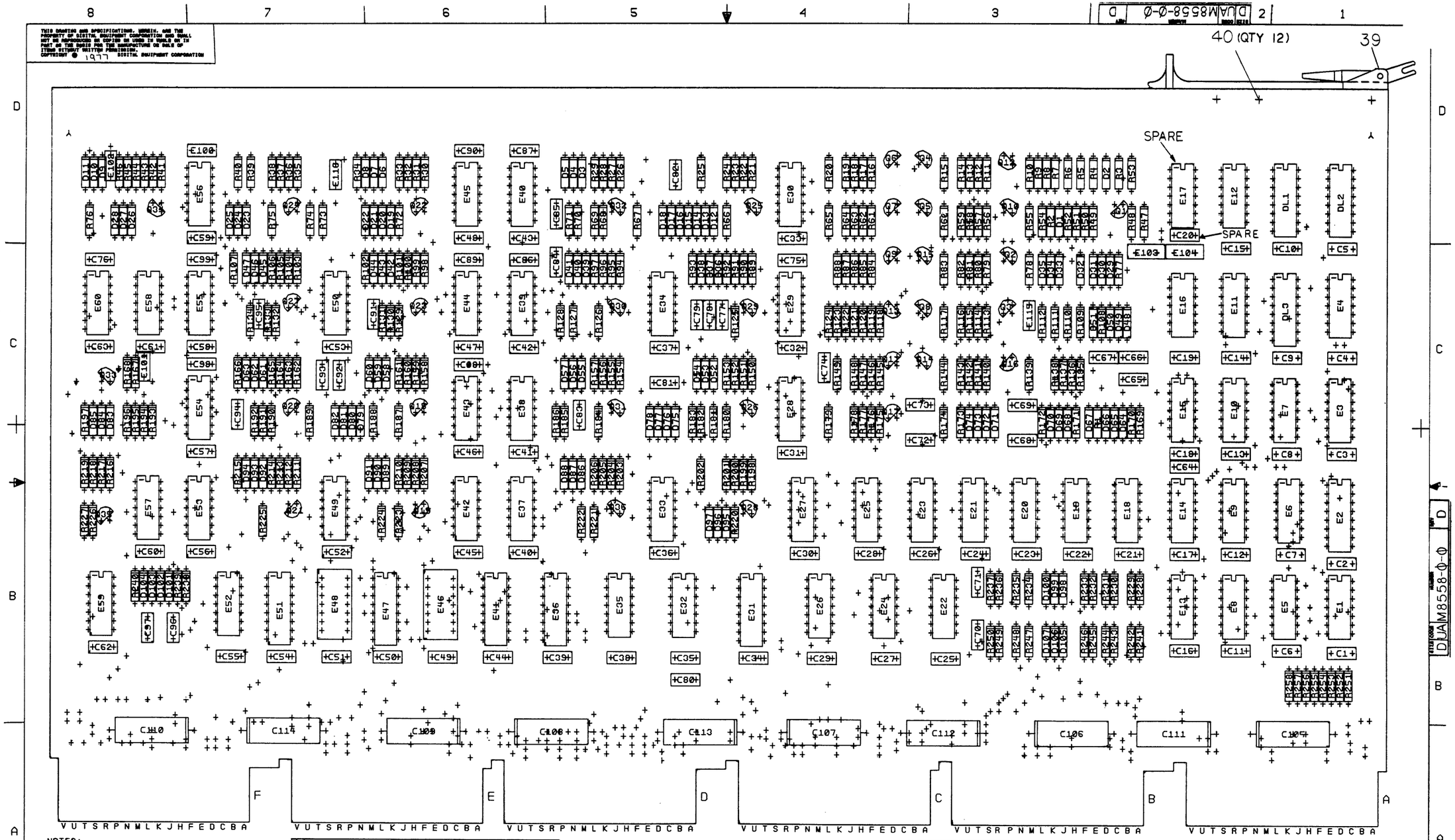

NOTES:

CHK	CHANGE NO	REV

ETCH REV.	CPI
P.C. DESIGN DATA BASE REV.	CPI

SIGNATURES	DATE
DRN.	28 JUL 77
CHK'D.	
ENG. D	13 OCT 77
PROJ.ENG.	13 OCT 77
PROD.	10-14-77
SCALE 2/1	
SHT. 2 OF 5	
NEXT HIGHER ASSY. B-DD-M8558-0	

digital

TITLE KI MEMORY BUS ADAPTER

SIZE	CODE	NUMBER	REV
D	UA	M8558-0-0	D

500

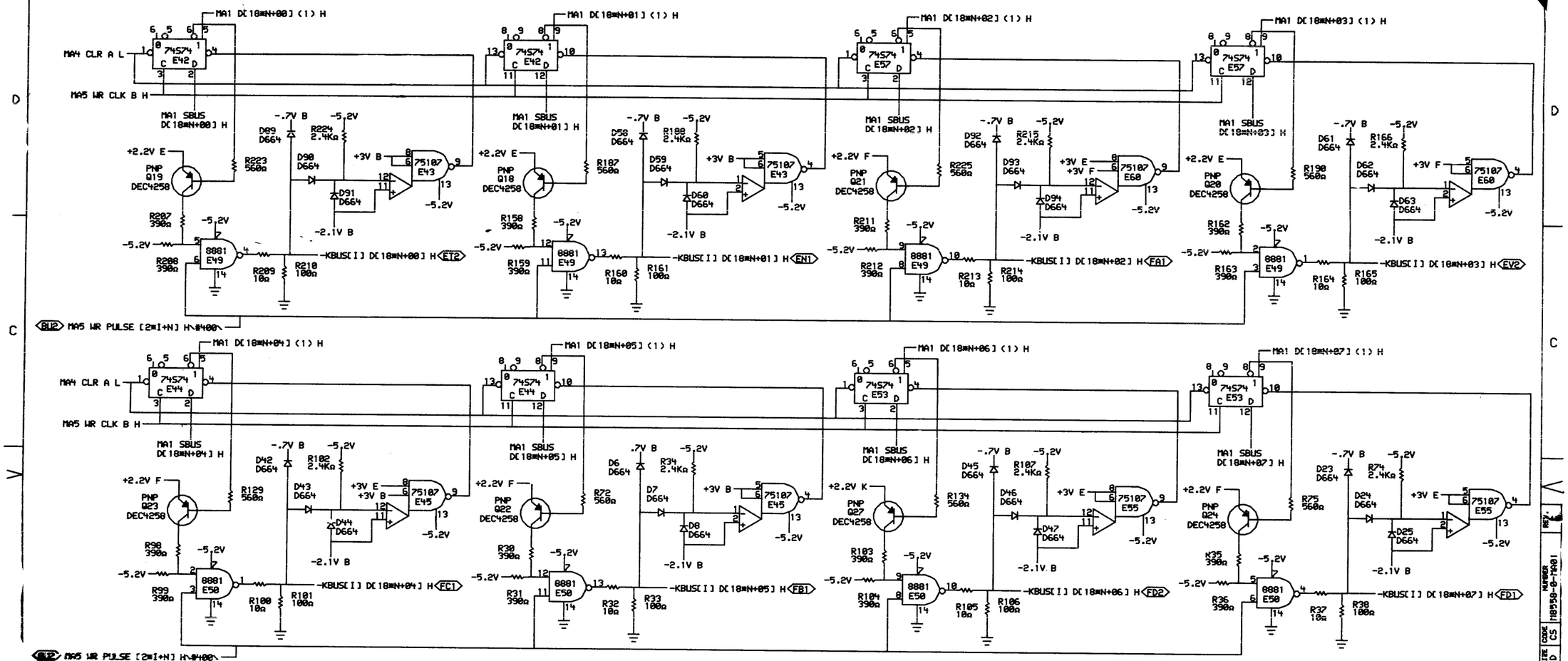

1 OF 6

"THIS DRAWING AND SPECIFICATIONS, HEREIN, ARE THE PROPERTY OF DIGITAL EQUIPMENT CORPORATION AND SHALL NOT BE REPRODUCED OR COPIED OR USED IN WHOLE OR IN PART AS THE BASIS FOR THE MANUFACTURE OR SALE OF ITEMS WITHOUT WRITTEN PERMISSION. COPYRIGHT © 1977, DIGITAL EQUIPMENT CORPORATION"

REVISIONS		
CHK	CHANGE NO.	REV
	M8558 MR009	C
T. Mallory 16 JAN 78		
D. LITWINETZ		

E. Cohen 11/8/77

digital

DRN. J. Toomey 15-AUG-77 | CHK'D. E. Cohen | DATE | ENG. [illegible] 7/20/77 | BOARD LOCATION: | SHEET 1 OF 1

MA01ER.DRW[4,621] 05-AUG-77 10:52 | NEXT HIGHER ASSEMBLY: | FIRST USED ON OPTION/MODEL: KL10 | B-DD-M8558-0

TITLE: KI MEMORY BUS ADAPTER

SIZE	CODE	NUMBER	REV.
D	CS	M8558-0-MA01	C

501

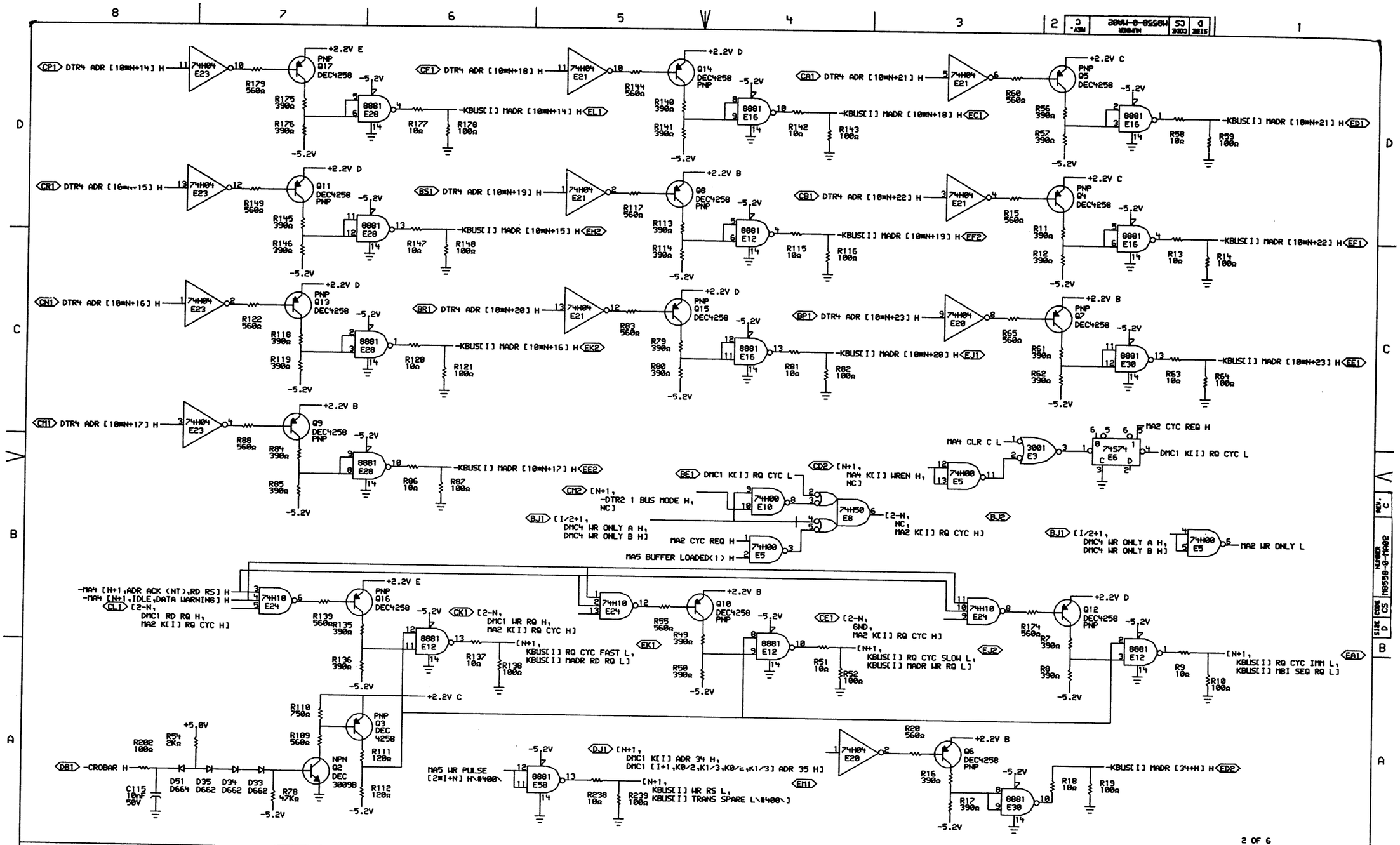

"THIS DRAWING AND SPECIFICATIONS, HEREIN, ARE THE PROPERTY OF DIGITAL EQUIPMENT CORPORATION AND SHALL NOT BE REPRODUCED OR COPIED OR USED IN WHOLE OR IN PART AS THE BASIS FOR THE MANUFACTURE OR SALE OF ITEMS WITHOUT WRITTEN PERMISSION. COPYRIGHT © 1977, DIGITAL EQUIPMENT CORPORATION"

REVISIONS		
CHK	CHANGE NO.	REV
	M8558 MR009	C
	D.LITWINETZ	

digital	DRN.	DATE 10-AUG-77	ENG. DATE 7/14/77
	CHK.	DATE 8/4/77	BOARD LOCATION: SHEET 1 OF 1
MA02ER.DRUC4,621	10-AUG-77 12:58	NEXT HIGHER ASSEMBLY: B-DD-M8558-0	
FIRST USED ON OPTION/MODEL: KL10			

TITLE: KI MEMORY BUS ADAPTER

SIZE	CODE	NUMBER	REV.
D	CS	M8558-0-MA02	C

502

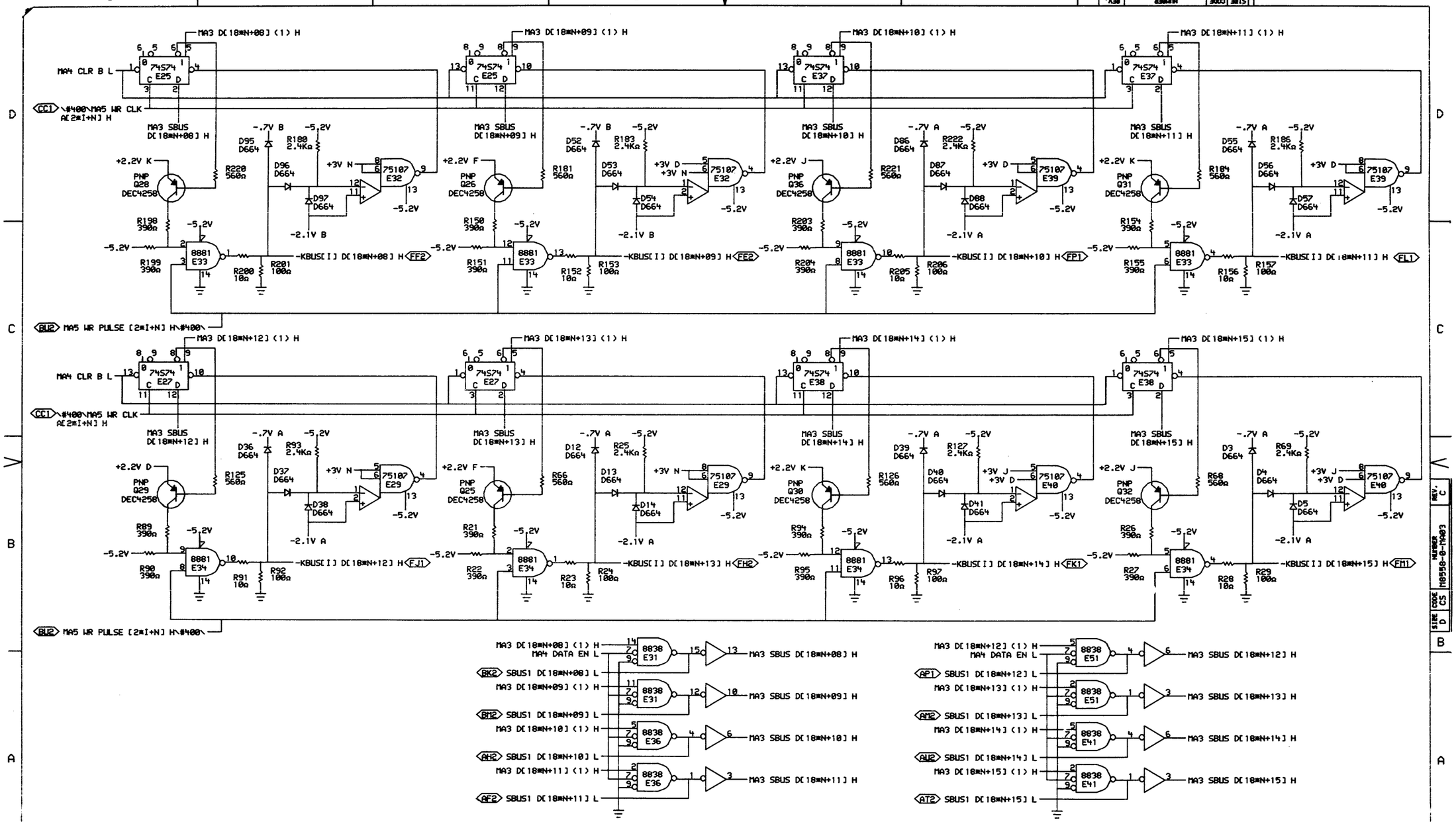

"THIS DRAWING AND SPECIFICATIONS, HEREIN, ARE THE PROPERTY OF DIGITAL EQUIPMENT CORPORATION AND SHALL NOT BE REPRODUCED OR COPIED OR USED IN WHOLE OR IN PART AS THE BASIS FOR THE MANUFACTURE OR SALE OF ITEMS WITHOUT WRITTEN PERMISSION. COPYRIGHT © 1977, DIGITAL EQUIPMENT CORPORATION"

REVISIONS		
CHK	CHANGE NO.	REV
	M8558 MA009	C
	17 JAN 78	
	D. LITWINETZ	

digital	DRN.	DATE 30-AUG-77	ENG. DATE 2/20/77
	CHK	DATE	BOARD LOCATION:
MA03ER.DRW[4,621] 24-AUG-77 13:23			SHEET 1 OF 1
FIRST USED ON OPTION/MODEL: KL10			NEXT HIGHER ASSEMBLY: B-DD-M8558-0

TITLE: KI MEMORY BUS ADAPTER

SIZE	CODE	NUMBER	REV.
D	CS	M8558-0-MA03	C

503

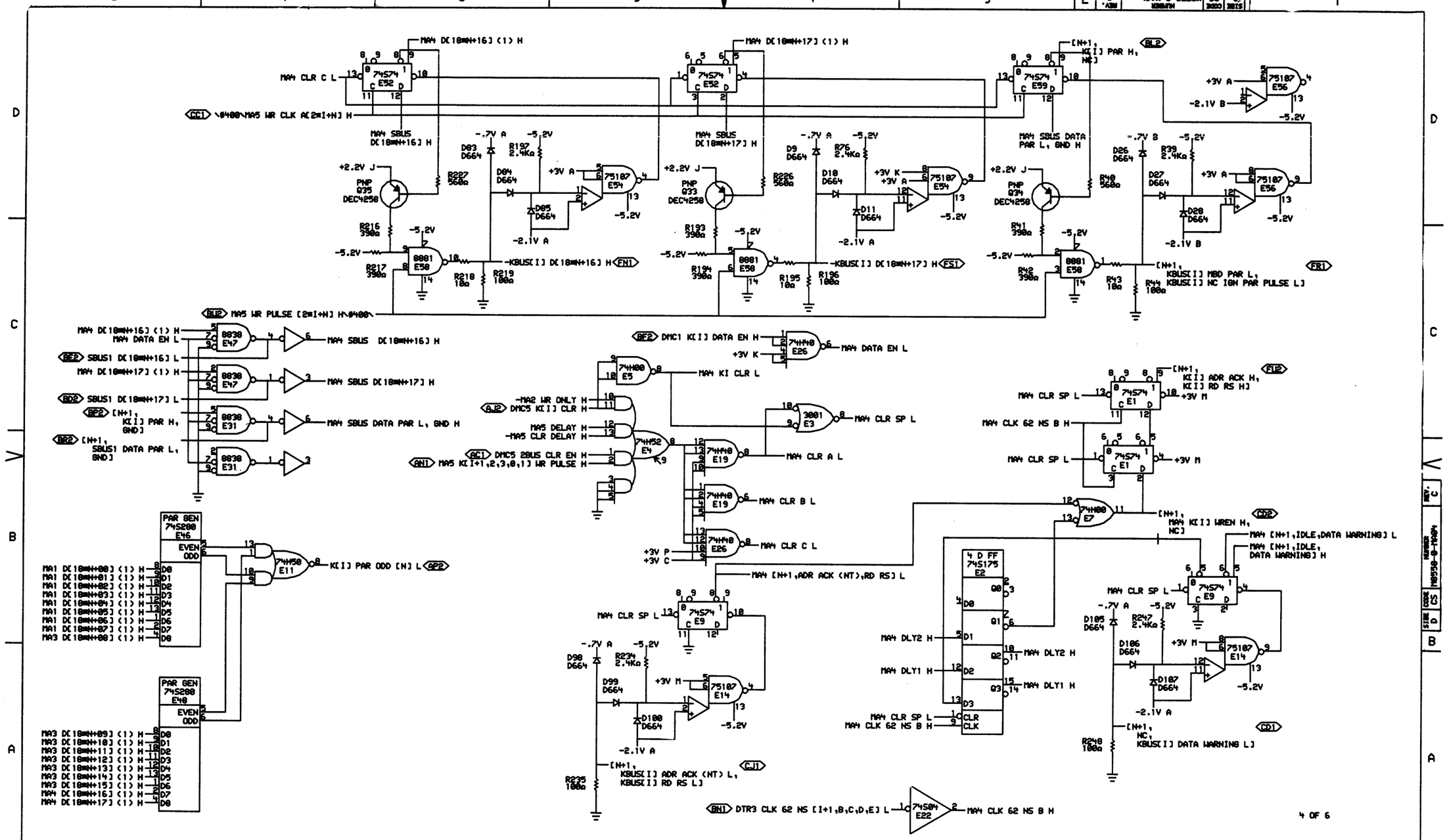

"THIS DRAWING AND SPECIFICATIONS, HEREIN, ARE THE PROPERTY OF DIGITAL EQUIPMENT CORPORATION AND SHALL NOT BE REPRODUCED OR COPIED OR USED IN WHOLE OR IN PART AS THE BASIS FOR THE MANUFACTURE OR SALE OF ITEMS WITHOUT WRITTEN PERMISSION. COPYRIGHT © 1977, DIGITAL EQUIPMENT CORPORATION"

REVISIONS		
CHK	CHANGE NO.	REV
	M8558 MR009	C
	D. LITWINETZ	

digital

DRN.	DATE 25-AUG-77	ENG.	DATE 7/30/77
CHK.	DATE 8/4/77	BOARD LOCATION:	
MA04ER.DRW[4,621] 25-AUG-77 11:04		SHEET 1 OF 1	
FIRST USED ON OPTION/MODEL: KL10		NEXT HIGHER ASSEMBLY: B-DD-M8558-0	

TITLE: KI MEMORY ADAPTER

SIZE	CODE	NUMBER	REV.
D	CS	M8558-0-MA04	C

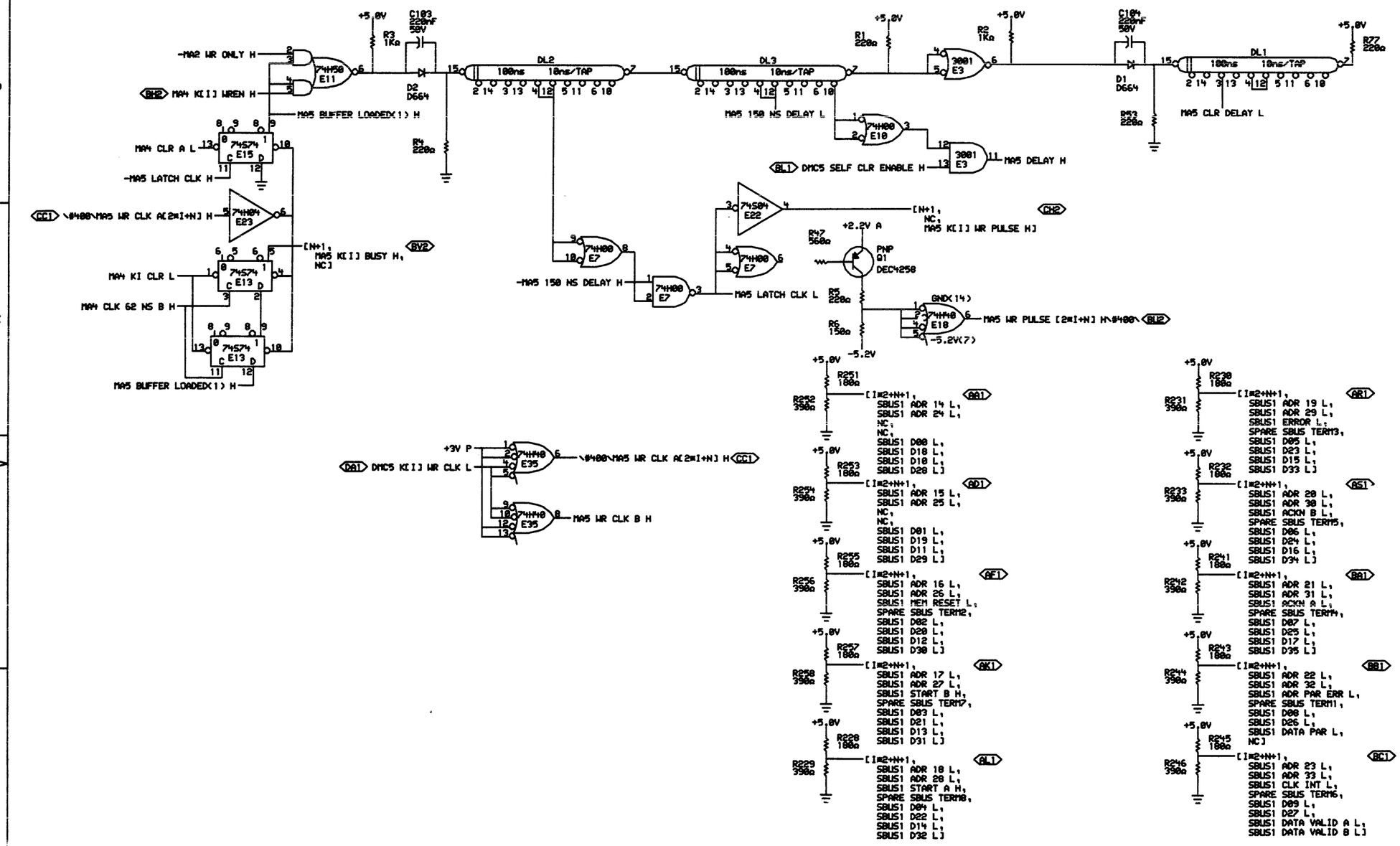

5 OF 6

"THIS DRAWING AND SPECIFICATIONS, HEREIN, ARE THE PROPERTY OF DIGITAL EQUIPMENT CORPORATION AND SHALL NOT BE REPRODUCED OR COPIED OR USED IN WHOLE OR IN PART AS THE BASIS FOR THE MANUFACTURE OR SALE OF ITEMS WITHOUT WRITTEN PERMISSION. COPYRIGHT © 1977, DIGITAL EQUIPMENT CORPORATION"

REVISIONS		
CHK	CHANGE NO.	REV
	M8558 MR009	C
T. McNeil 17 JAN 78		
D. LITWINETZ		

E. Carr 11/18/77

digital	DRN.	DATE 25-AUG-77	ENG. DATE 7/30/77
	CHK.	DATE 8/27/77	BOARD LOCATION:
			SHEET 1 OF 1
HARDSER.DBU(4,621)		24-AUG-77 13:26	NEXT HIGHER ASSEMBLY:
FIRST USED ON OPTION/MODEL: KL10			B-DD-M8558-0

TITLE: KI MEMORY BUS ADAPTER

SIZE	CODE	NUMBER	REV.
D	CS	M8558-0-MA05	C

505

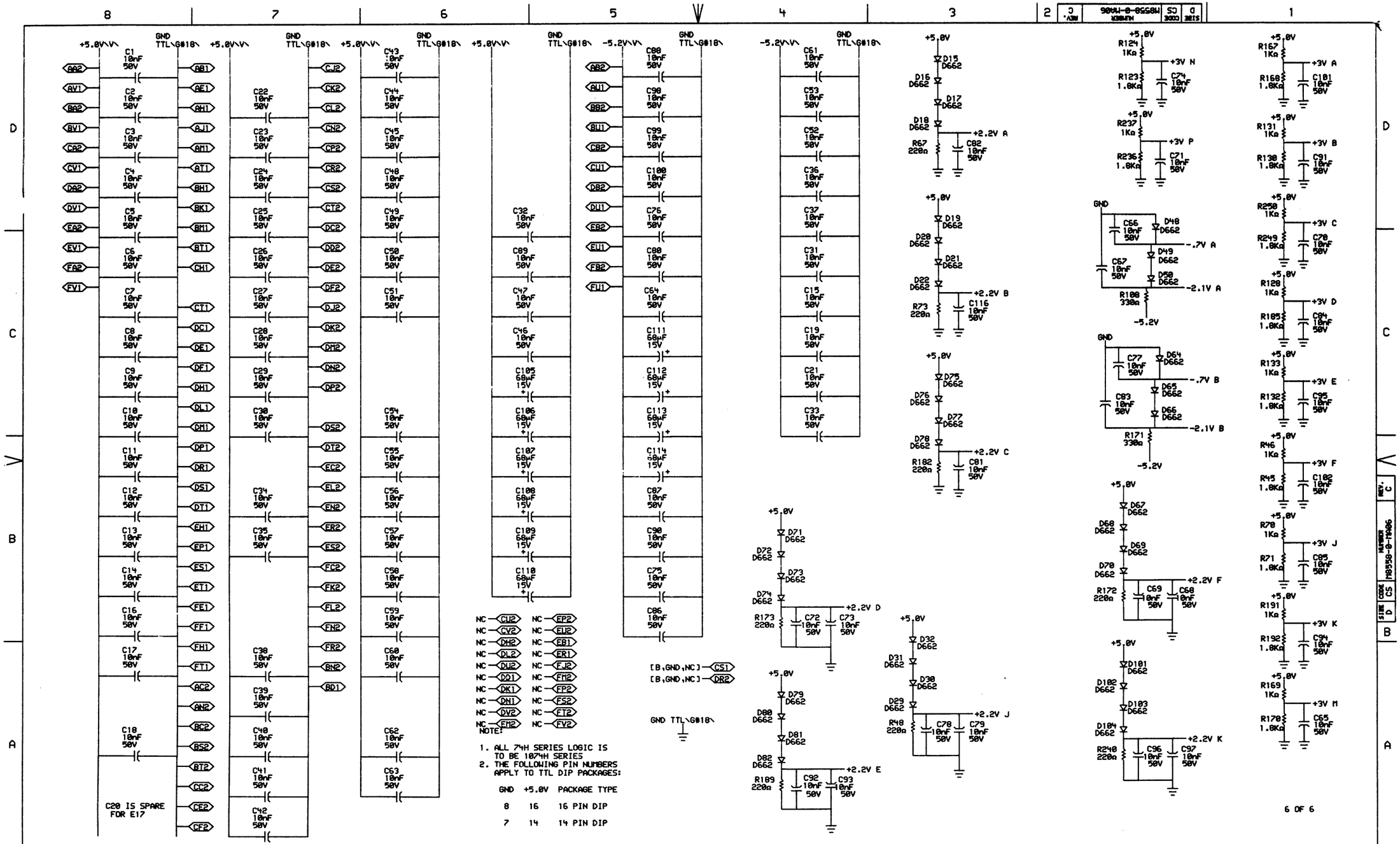

"THIS DRAWING AND SPECIFICATIONS, HEREIN, ARE THE PROPERTY OF DIGITAL EQUIPMENT CORPORATION AND SHALL NOT BE REPRODUCED OR COPIED OR USED IN WHOLE OR IN PART AS THE BASIS FOR THE MANUFACTURE OR SALE OF ITEMS WITHOUT WRITTEN PERMISSION.
COPYRIGHT © 1977, DIGITAL EQUIPMENT CORPORATION"

REVISIONS		
CHK	CHANGE NO.	REV
	M8558 MR009	C
D. LITWINETZ		

digital

DRN: D. Lounsby DATE 15-AUG-77
CHK'D: E. Cohn DATE 8/17/77
ENG: J. Holowell DATE 7/30/77
BOARD LOCATION:
SHEET 1 OF 1
NEXT HIGHER ASSEMBLY: B-DD-M8558-0
MA06ER.DRW[4,621] 05-AUG-77 14:11
FIRST USED ON OPTION/MODEL: KL10

TITLE: KI MEMORY BUS ADAPTER

SIZE	CODE	NUMBER	REV.
D	CS	M8558-0-MA06	C

506

REVISION CONTROL SHEET

CUSTOMER PRINT SET	MFG SET	DRAWING NO	NO OF SHT	DESCRIPTION	OPTION NO/FILE DATE	REVISIONS			
			-	MODULE REVISION		A	B	C	C
		D-UA-M8560-0-0	6	SBUS INTERFACE		-	A	B	C
		D-CS-M8560-0-DTR1	1	DMA TIMING AND SBUS TRANCEIVERS		-	A	B	C
		D-CS-M8560-0-DTR2	1	DMA TIMING AND SBUS TRANCEIVERS		-	A	A	A
		D-CS-M8560-0-DTR3	1	DMA TIMING AND SBUS TRANCEIVERS		-	A	B	B
		D-CS-M8560-0-DTR4	1	DMA TIMING AND SBUS TRANCEIVERS		-	A	A	B
		D-CS-M8560-0-DTR5	1	DMA TIMING, POWER AND GND		-	A	A	A
		K-CO-M8560-0-4	1	SBUS INTERFACE (CALDEC DATA BASE)		B	B	B	B
		D-AH-M8560-0-5	4	SBUS INTERFACE		A	A	A	A
		B-MH-M8560-0-6	1	MODULE ECO HISTORY		-	REF	-	-
		5010655	-	ETCH CIRCUIT BOARD		B	B	B	B
		P00-M8560-00		PROCESS SHEET (REF ONLY)		-	-	-	-

CUSTOMER PRINT SET CODES

X = PRINT OF DOCUMENT INCLUDED IN PRINT SET
C = INCLUDES ALL PRINTS INDICATED ON DOCUMENT
S = CONFIDENTIAL AUTHORIZED SIGNATURE REQUIRED

ECO NO	ORIG	00001	00002	00003

TITLE		SIZE	CODE	NUMBER	REV
SBUS INTERFACE	SHEET 2 OF 2	B	DD	M8560-0	C

507

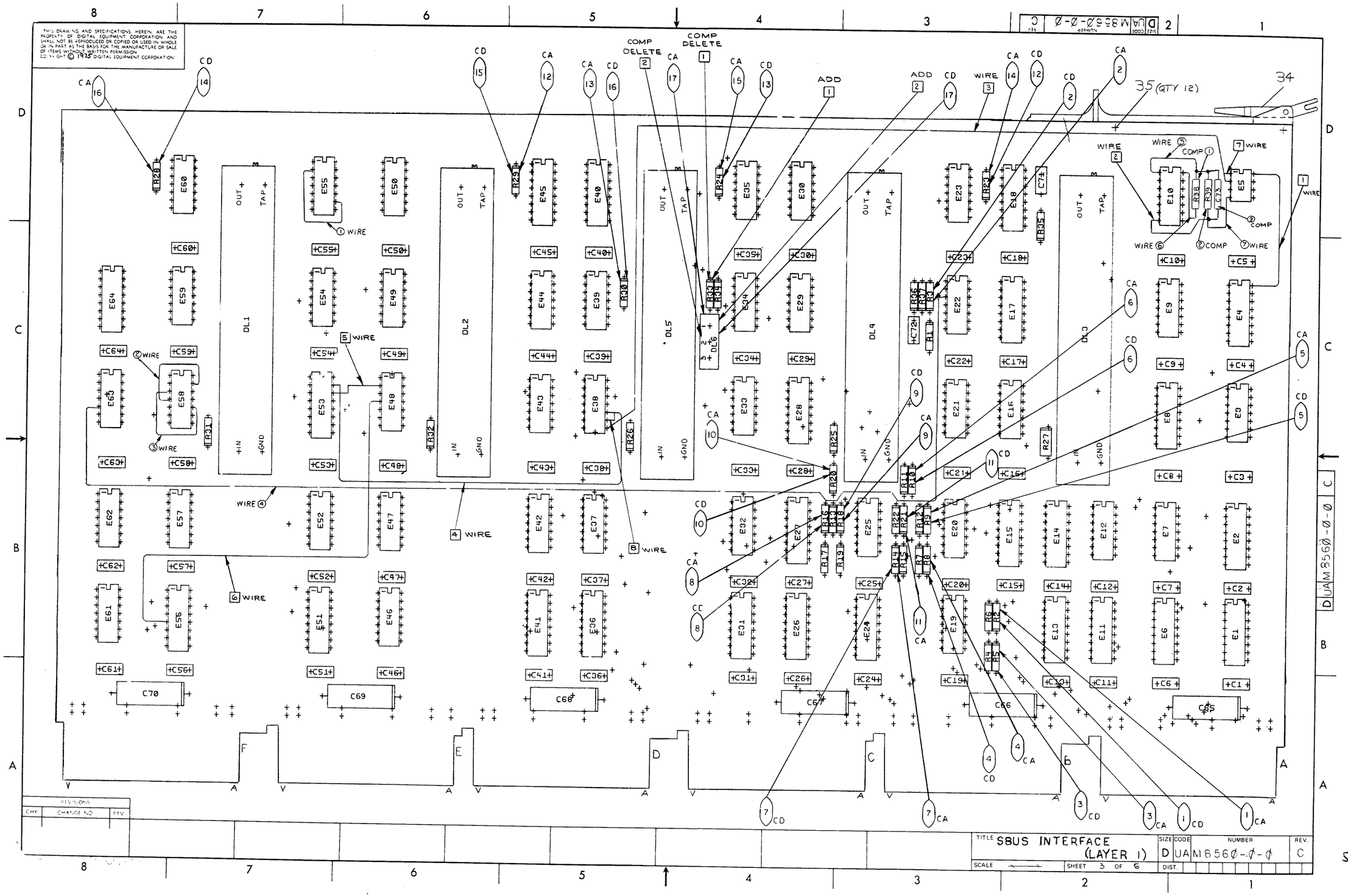
THIS DRAWING AND SPECIFICATIONS, HEREIN, ARE THE PROPERTY OF DIGITAL EQUIPMENT CORPORATION AND SHALL NOT BE REPRODUCED OR COPIED OR USED IN WHOLE OR IN PART AS THE BASIS FOR THE MANUFACTURE OR SALE OF ITEMS WITHOUT WRITTEN PERMISSION
COPYRIGHT © 1975 DIGITAL EQUIPMENT CORPORATION
COMP DELETE
ADD
WIRE
COMP
35 (QTY 12)
34
DL1
DL2
DL3
DL4
DL5
DL6
OUT +
TAP +
+IN
+GND
REVISIONS
CHK
CHANGE NO
REV
TITLE SBUS INTERFACE (LAYER 1)
SIZE D
CODE UA
NUMBER M8560-0-0
REV. C
SCALE
SHEET 3 OF 6
DIST.
D UA M8560-0-0 C

508

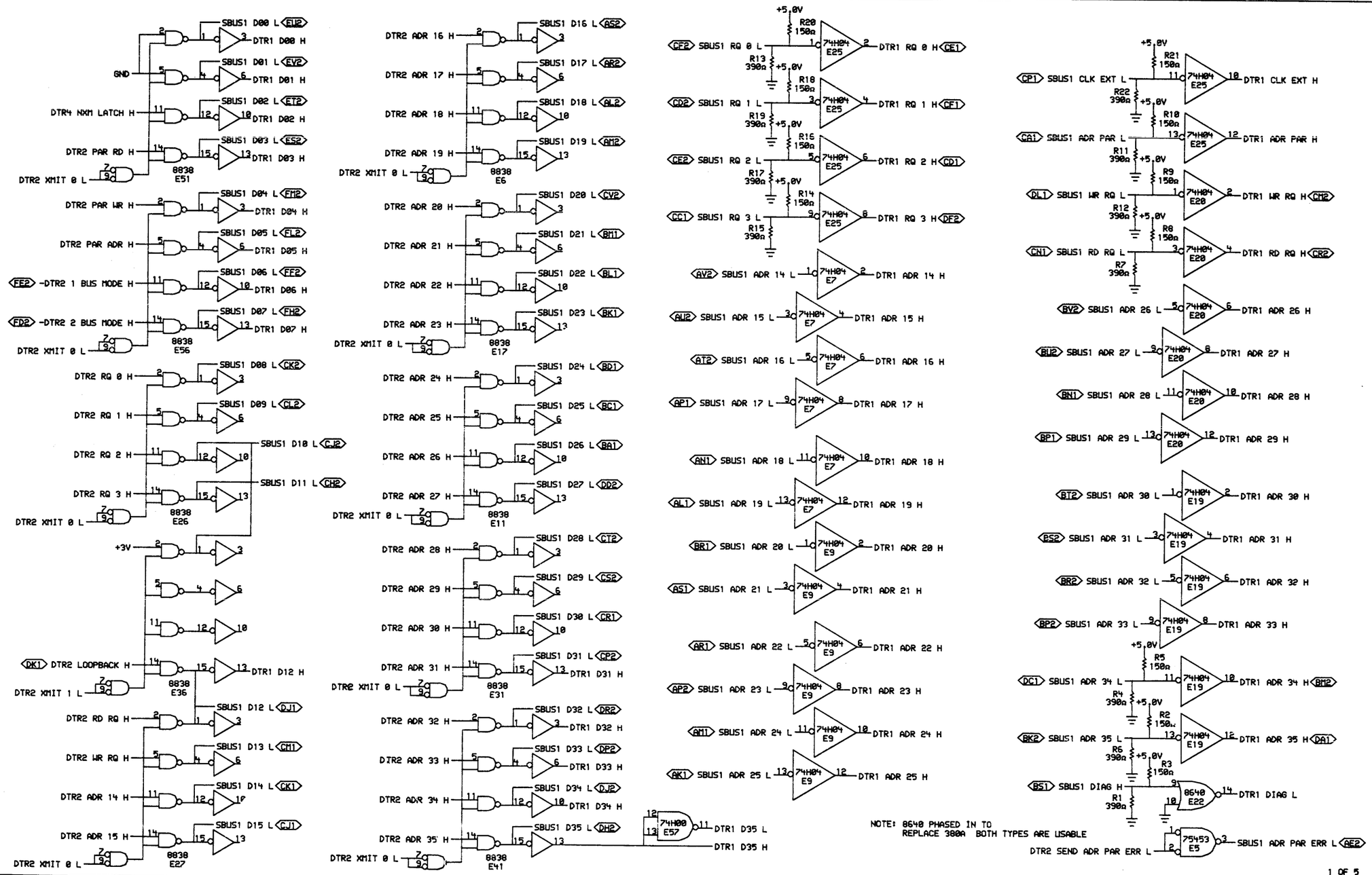

"THIS DRAWING AND SPECIFICATIONS, HEREIN, ARE THE PROPERTY OF DIGITAL EQUIPMENT CORPORATION AND SHALL NOT BE REPRODUCED OR COPIED OR USED IN WHOLE OR IN PART AS THE BASIS FOR THE MANUFACTURE OR SALE OF ITEMS WITHOUT WRITTEN PERMISSION.
COPYRIGHT © 1977, DIGITAL EQUIPMENT CORPORATION"

REVISIONS		
CHK	CHANGE NO.	REV
—	M8560-00003	C
	B.BRUCKET	

digital	DRW.	DATE 10-AUG-77	ENG.	DATE 11-AUG-77
	CHK	DATE 8/10/77	BOARD LOCATION: 1AF03	
DTR1EX.DRW[4,623] 10-AUG-77 13:46			SHEET 1 OF 1	
FIRST USED ON OPTION/MODEL: DMA20			NEXT HIGHER ASSEMBLY: B-DD-M8560-0	

TITLE: DMA TIMING AND SBUS TRANCEIVERS

SIZE	CODE	NUMBER	REV.
D	CS	M8560-0-DTR1	C

509

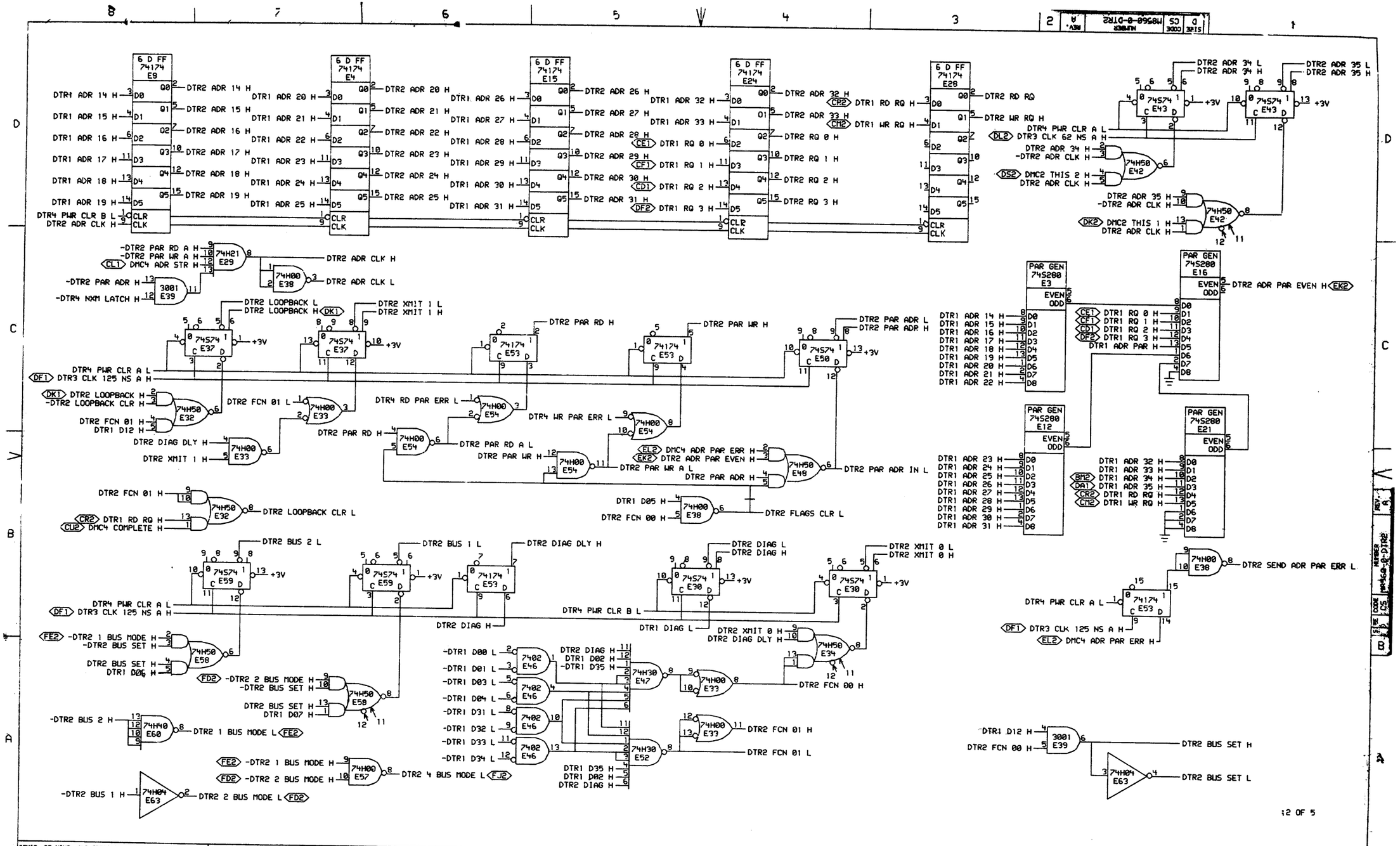

"THIS DRAWING AND SPECIFICATIONS, HEREIN, ARE THE PROPERTY OF DIGITAL EQUIPMENT CORPORATION AND SHALL NOT BE REPRODUCED OR COPIED OR USED IN WHOLE OR IN PART AS THE BASIS FOR THE MANUFACTURE OR SALE OF ITEMS WITHOUT WRITTEN PERMISSION.
COPYRIGHT © 1975, DIGITAL EQUIPMENT CORPORATION"

REVISIONS		
CHK	CHANGE NO.	REV
	M8560-00001	A
W. BRUCKERT		

digital

DRW. Tourley 5/23/75 | DATE | ENG. | DATE 6/9/75
CHK. | DATE 5/23/75 | BOARD LOCATION: 1AF03 | SHEET 1 OF 1
DTR2EXL4,426] 12-MAY-75 08:33 | NEXT HIGHER ASSEMBLY:
FIRST USED ON OPTION/MODEL: DMA20 | B-DD-M8560-0

TITLE: DMA TIMING AND SBUS TRANCEIVERS

SIZE	CODE	NUMBER	REV
D	CS	M8560-0-DTR2	A

510

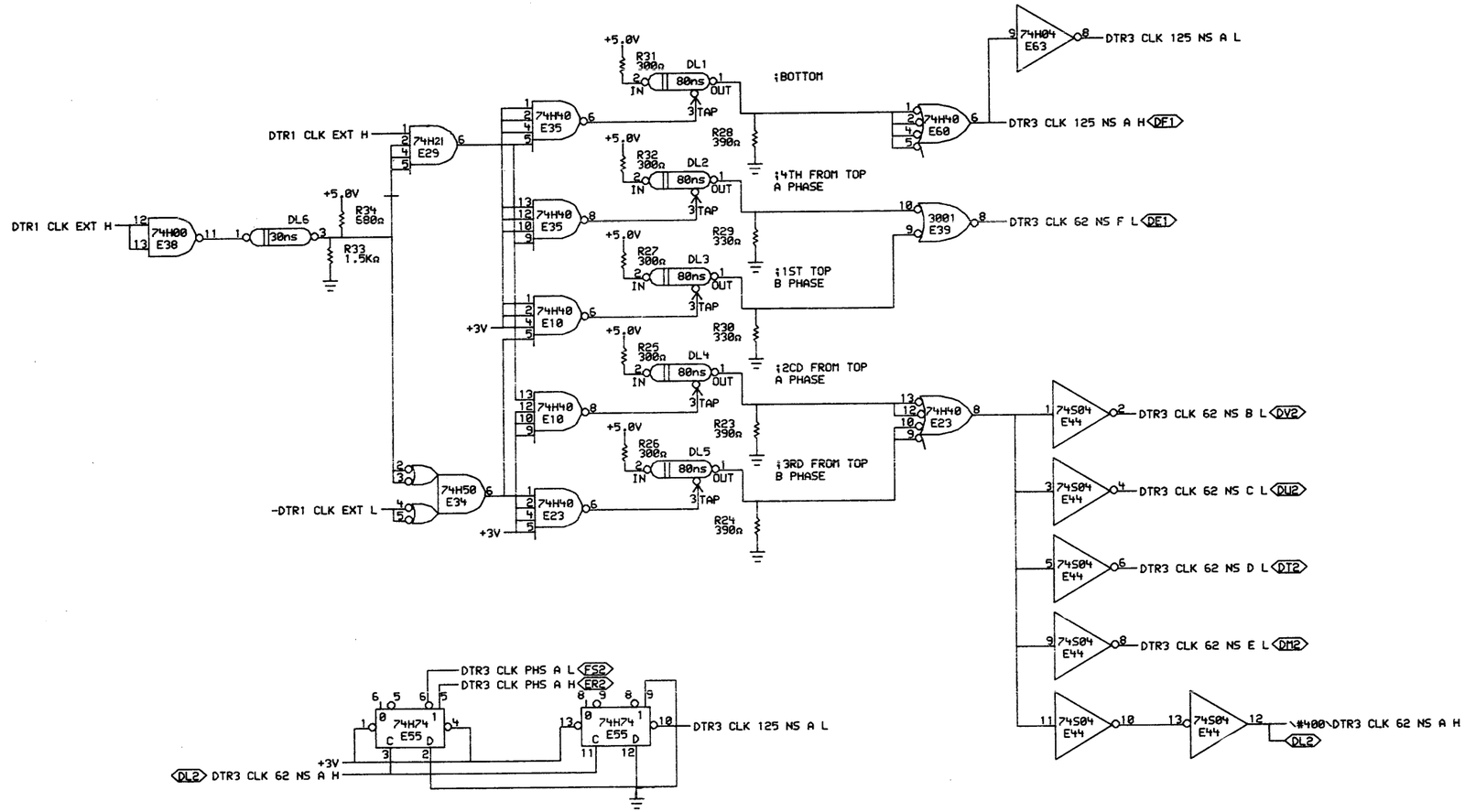

3 OF 5

"THIS DRAWING AND SPECIFICATIONS, HEREIN, ARE THE PROPERTY OF DIGITAL EQUIPMENT CORPORATION AND SHALL NOT BE REPRODUCED OR COPIED OR USED IN WHOLE OR IN PART AS THE BASIS FOR THE MANUFACTURE OR SALE OF ITEMS WITHOUT WRITTEN PERMISSION.
COPYRIGHT © 1977, DIGITAL EQUIPMENT CORPORATION"

REVISIONS		
CHK	CHANGE NO.	REV
G.V.	M8560-00002	B
W. Brown	21-MAR-77	
J. B. BRUCKERT		
John Wade	24-JAN-77	

digital

DRW. L. Loomis DATE 24-JAN-77 ENG. W. Bruckert DATE 24-JAN-77
CHK. W. Stephenson DATE 1/25/77 BOARD LOCATION: 1AF03
DTR3EX.DRW[4,623] 24-JAN-77 18:09 NEX SHEET 1 OF 1
FIRST USED ON OPTION/MODEL: DMA20 HIGHER ASSEMBLY: 3560-0

TITLE: DMA TIMING AND SBUS TRANCEIVERS

SIZE	CODE	NUMBER	REV.
D	CS	M8560-0-DTR3	B

115

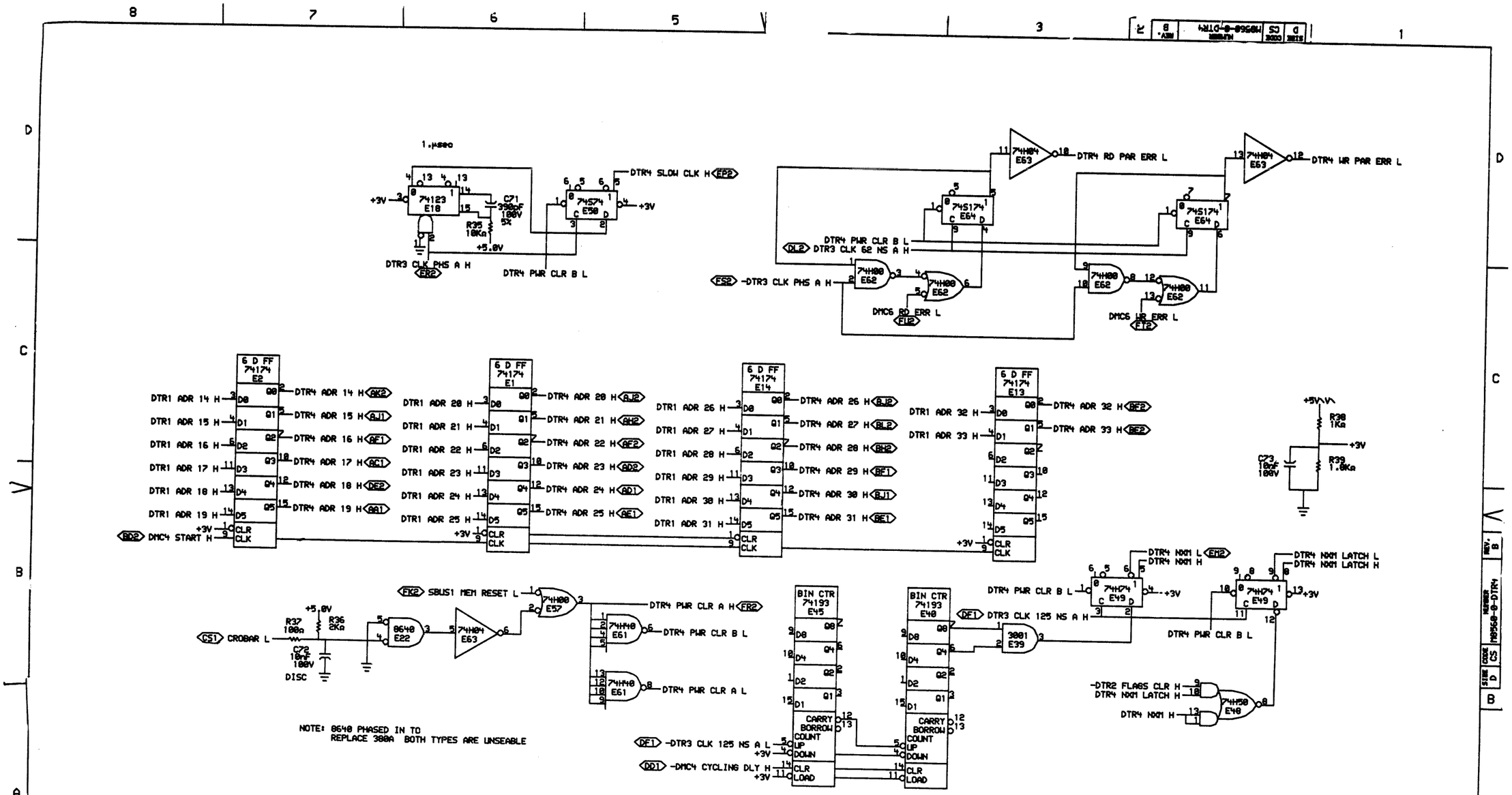

"THIS DRAWING AND SPECIFICATIONS, HEREIN, ARE THE PROPERTY OF DIGITAL EQUIPMENT CORPORATION AND SHALL NOT BE REPRODUCED OR COPIED OR USED IN WHOLE OR IN PART AS THE BASIS FOR THE MANUFACTURE OR SALE OF ITEMS WITHOUT WRITTEN PERMISSION.
COPYRIGHT © 1977, DIGITAL EQUIPMENT CORPORATION"

REVISIONS		
CHK	CHANGE NO.	REV
—	M8560-00003	B

digital

DRN: J. Loomis DATE 18-AUG-77
CHK: DATE
DTR4EX.DRW[4,623] 18-AUG-77 13:52
FIRST USED ON OPTION/MODEL: DMA20

ENG: DATE
BOARD LOCATION: 1 OF 1
SHEET 1 OF 1
NEXT HIGHER ASSEMBLY: B+DD-M8560-0

TITLE: DMA TIMING AND SBUS TRANCEIVERS

SIZE	CODE	NUMBER	REV.
D	CS	M8560-0-DTR4	B

512

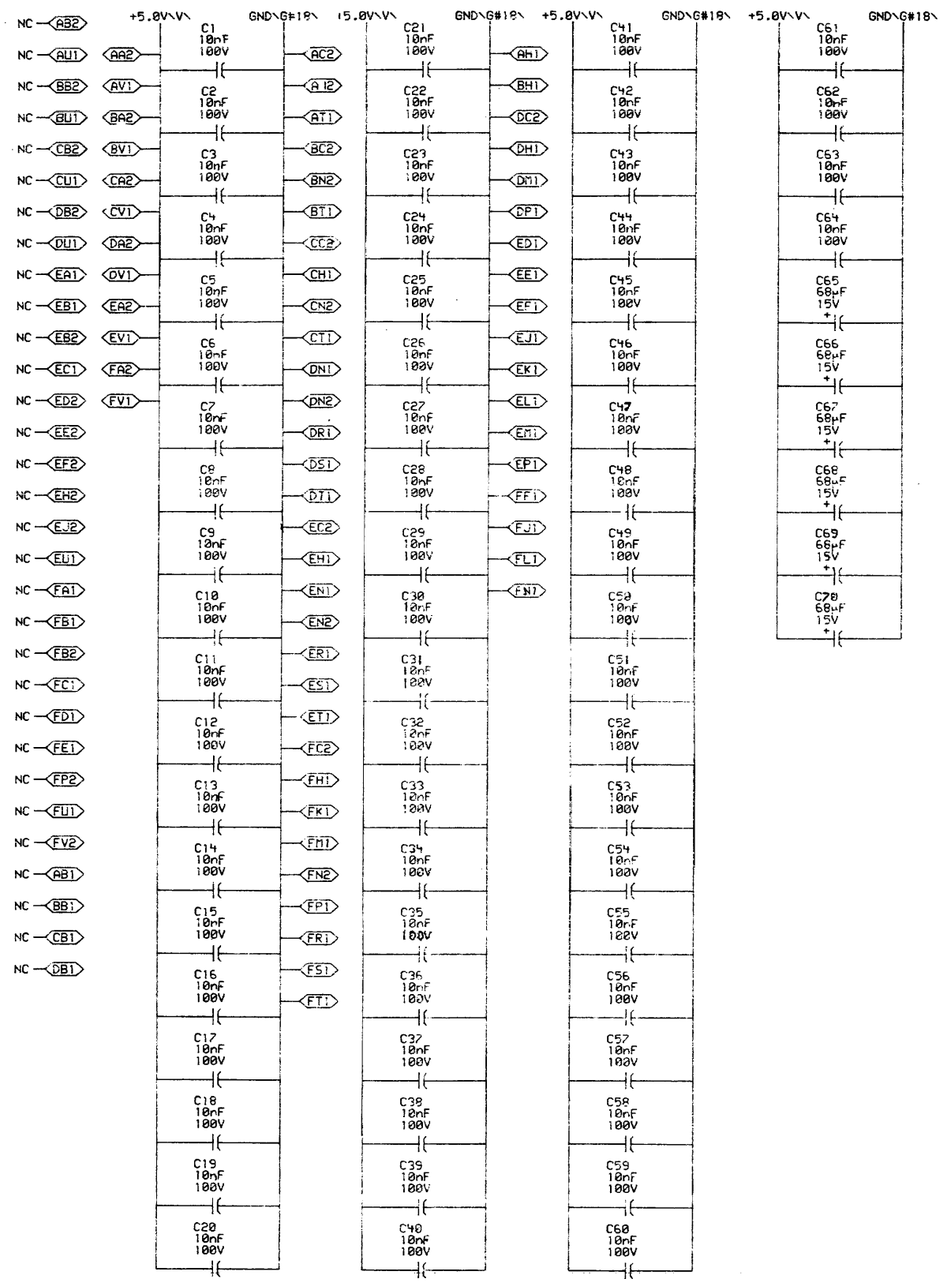

NOTE:

1. ALL 74H SERIES LOGIC IS TO BE 10274H SERIES
2. THE FOLLOWING PIN NUMBERS APPLY TO TTL DIP PACKAGES:

GND	+5.0V	PACKAGE TYPE
8	16	16 PIN DIP
7	14	14 PIN DIP
;4	8	8 PIN DIP

;5 OF 5

"THIS DRAWING AND SPECIFICATIONS, HEREIN, ARE THE PROPERTY OF DIGITAL EQUIPMENT CORPORATION AND SHALL NOT BE REPRODUCED OR COPIED OR USED IN WHOLE OR IN PART AS THE BASIS FOR THE MANUFACTURE OR SALE OF ITEM" WITHOUT WRITTEN PERMISSION.
COPYRIGHT © 1975, DIGITAL EQUIPMENT CORPORATION"

REVISIONS		
CHK	CHANGE NO.	REV
	M8560-00001	A
W BRUCKERT		

digital

DR: S. Toomey DATE 5/5/75 ENG. DATE 6/9/75
CHK'D: DATE 5/27/75 BOARD LOCATION: 1AF03
SHEET 1 OF 1
DTR5EXE(4,426) 12-MAY-75 08:44 NEXT HIGHER ASSEMBLY:
FIRT USED ON OPTION/MODEL DMA20 B-DD-M8560-0

TITLE: DMA TIMING POWER AND GROUND

SIZE	CODE	NUMBER	REV.
D	CS	M8560-0-DTR5	A

513

REVISION CONTROL SHEET

| CUSTOMER PRINT SET | MFG SET | DRAWING NO | NO OF SHT | DESCRIPTION | OPTION NO/FILE DATE | REVISIONS | | |

THIS DRAWING AND SPECIFICATIONS, HEREIN, ARE THE PROPERTY OF DIGITAL EQUIPMENT CORPORATION AND SHALL NOT BE REPRODUCED OR COPIED OR USED IN WHOLE OR IN PART AS THE BASIS FOR THE MANUFACTURE OR SALE OF ITEMS WITHOUT WRITTEN PERMISSION.
©1975 DIGITAL EQUIPMENT CORPORATION

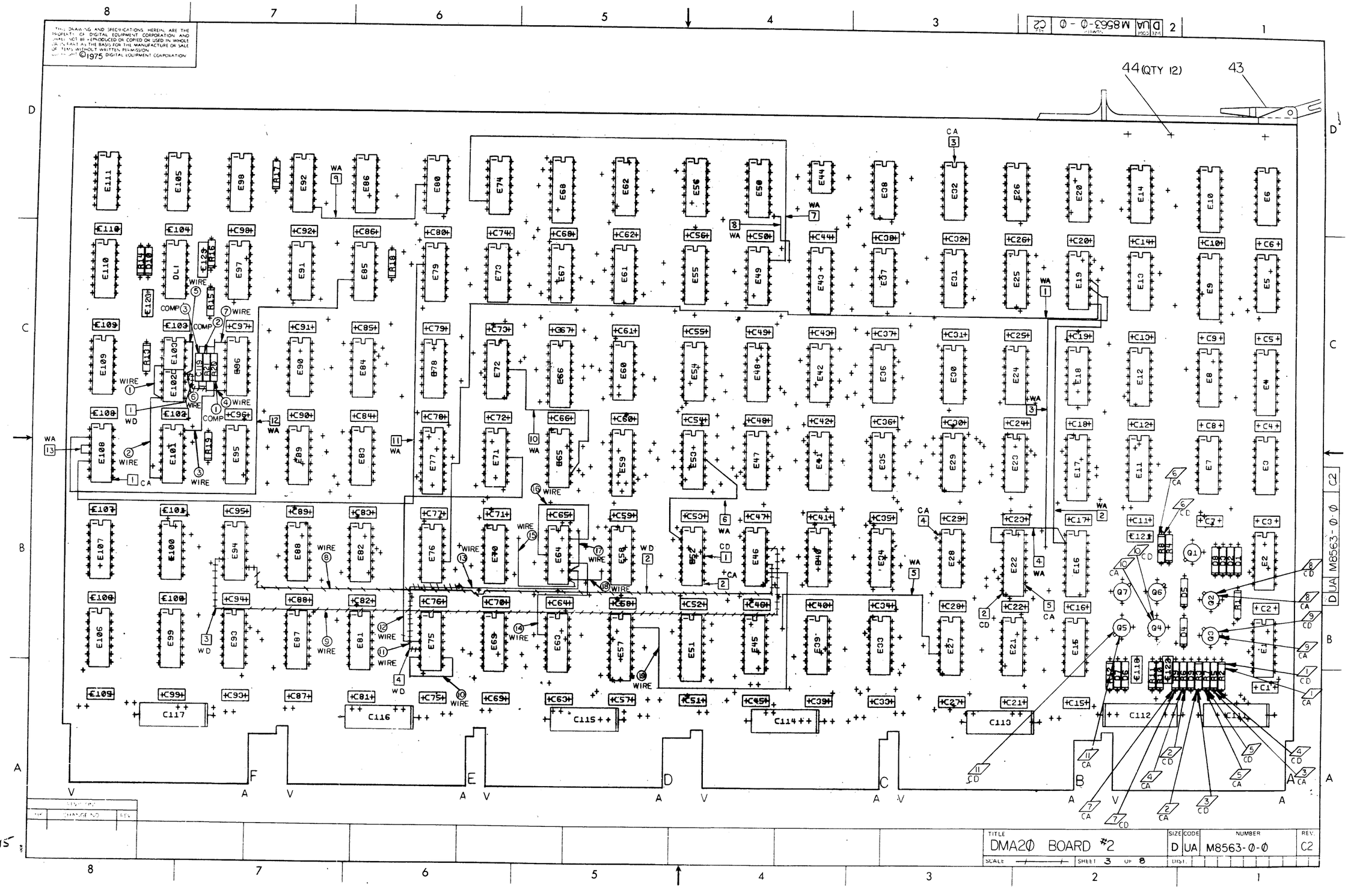

REV	CHANGE NO	REV

TITLE	SIZE	CODE	NUMBER	REV.
DMA20 BOARD #2	D	UA	M8563-0-0	C2

515

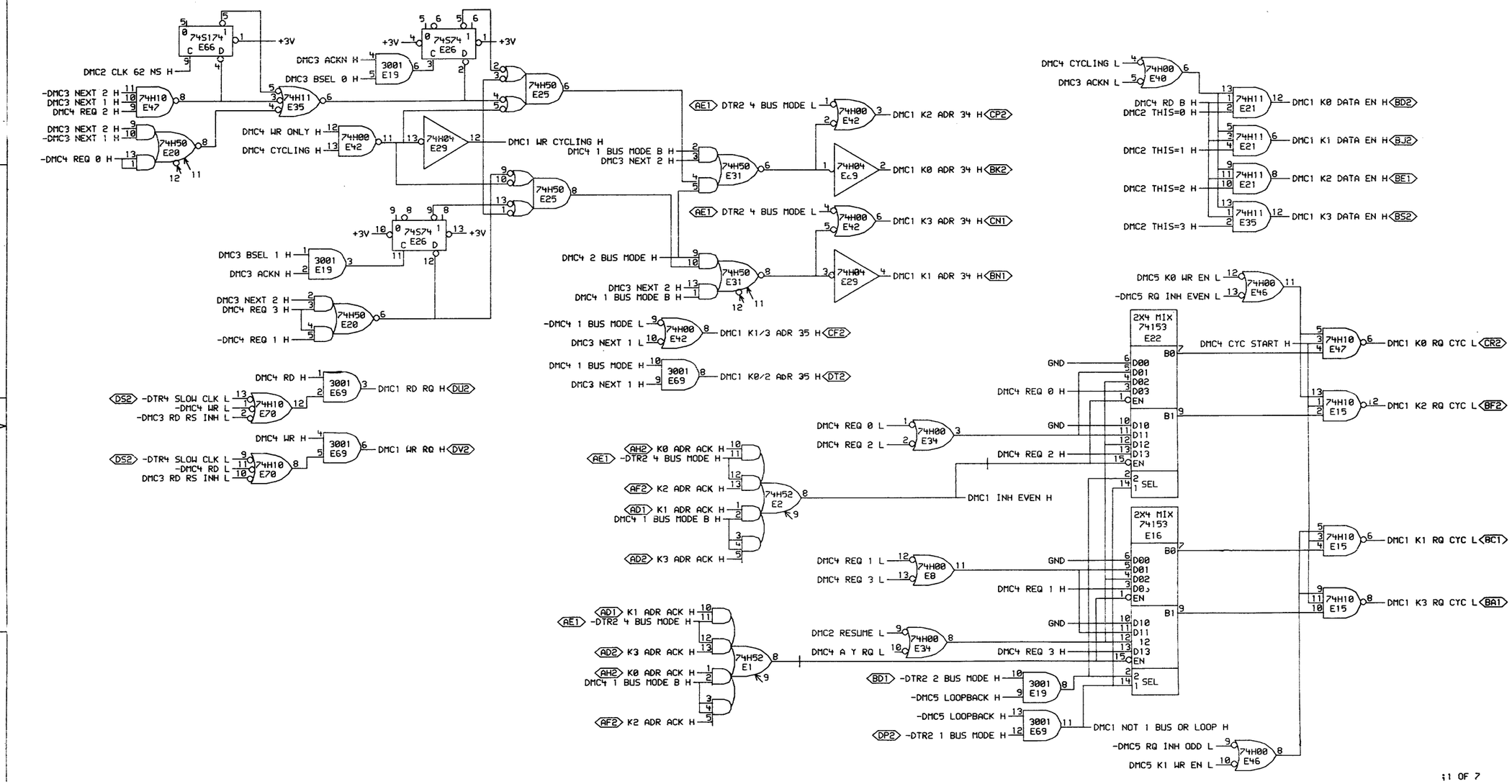

"THIS DRAWING AND SPECIFICATIONS, HEREIN, ARE THE PROPERTY OF DIGITAL EQUIPMENT CORPORATION AND SHALL NOT BE REPRODUCED OR COPIED OR USED IN WHOLE OR IN PART AS THE BASIS FOR THE MANUFACTURE OR SALE OF ITEMS WITHOUT WRITTEN PERMISSION. COPYRIGHT © 1975, DIGITAL EQUIPMENT CORPORATION"

REVISIONS			
CHK	CHANGE NO.	REV	M8563-00004 A1
	M8563-00001	A	W. BRUCKERT
	W. BRUCKERT		

digital

DRN: S. Foonley
CHK: D. Stephenson
DMC1EXE[4,426] 08-JUN-75 07:39
FIRST USED ON OPTION/MODEL: DMA20

DATE	ENG.	DATE
3/6/75	W. Bruckert	6/9/75
DATE	BOARD LOCATION: 1AF02	
5/6/75	SHEET 1 OF 1	
	NEXT HIGHER ASSEMBLY: B-DD-M8563-0	

TITLE: ADAPTER INTERFACE DMA20 BOARD 2

SIZE	CODE	NUMBER	REV.
D	CS	M8563-0-DMC1	A1

516

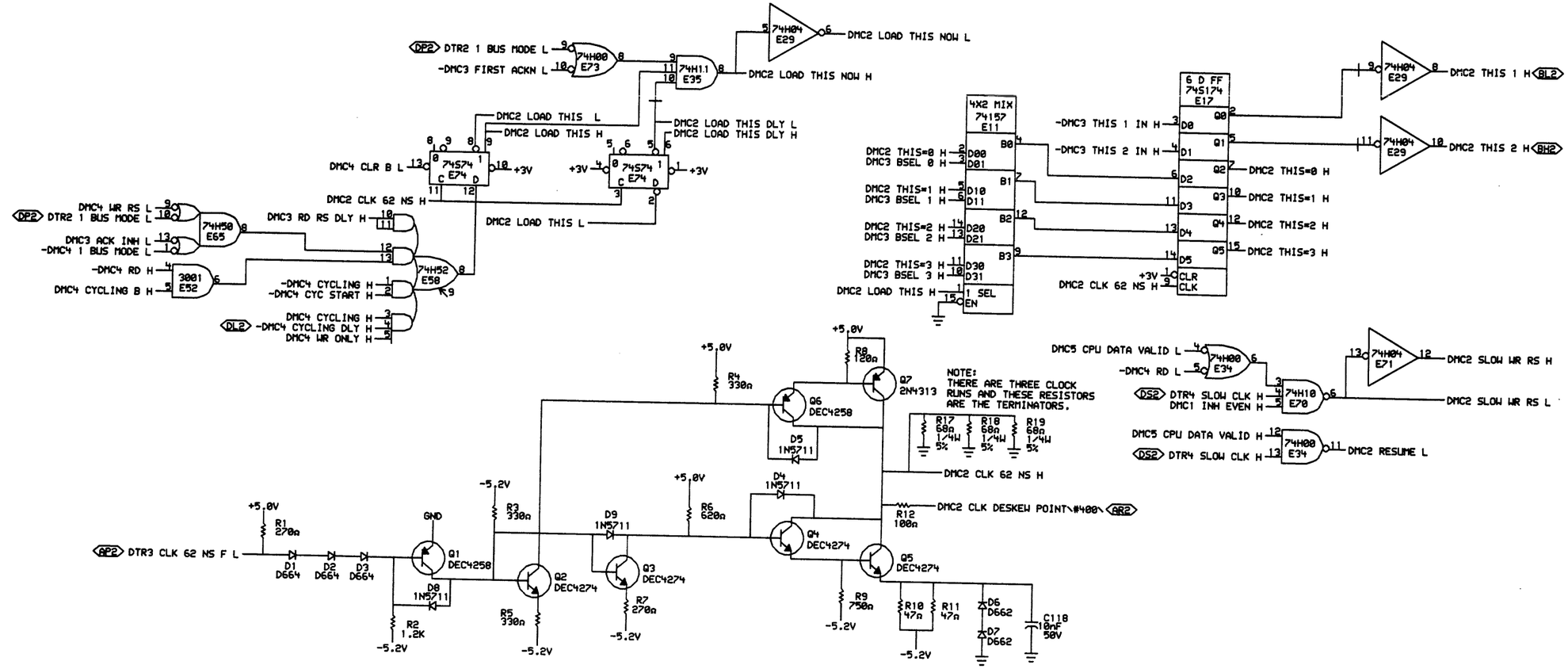

12 OF 7

"THIS DRAWING AND SPECIFICATIONS, HEREIN, ARE THE PROPERTY OF DIGITAL EQUIPMENT CORPORATION AND SHALL NOT BE REPRODUCED OR COPIED OR USED IN WHOLE OR IN PART AS THE BASIS FOR THE MANUFACTURE OR SALE OF ITEMS WITHOUT WRITTEN PERMISSION.
COPYRIGHT © 1977, DIGITAL EQUIPMENT CORPORATION"

REVISIONS		
CHK	CHANGE NO.	REV
-	M8563-0000.5	B2
	W. BRUCKERT	

digital	DRN. L. Looney	DATE 15-APR-77	ENG. W. Bruckert	DATE 20MAR77
	CHKD E. Cone	DATE 4/21/77	BOARD LOCATION: 1AF02	SHEET 1 OF 1
DMC2EX.DRW(4.626)	15-APR-77 10:15	NEXT HIGHER ASSEMBLY: B-DD-M8563-0		
FIRST USED ON OPTION/MODEL: DMA20				

TITLE: BUS SELECTION DMA20

SIZE	CODE	NUMBER	REV.
D	CS	M8563-0-DMC2	B2

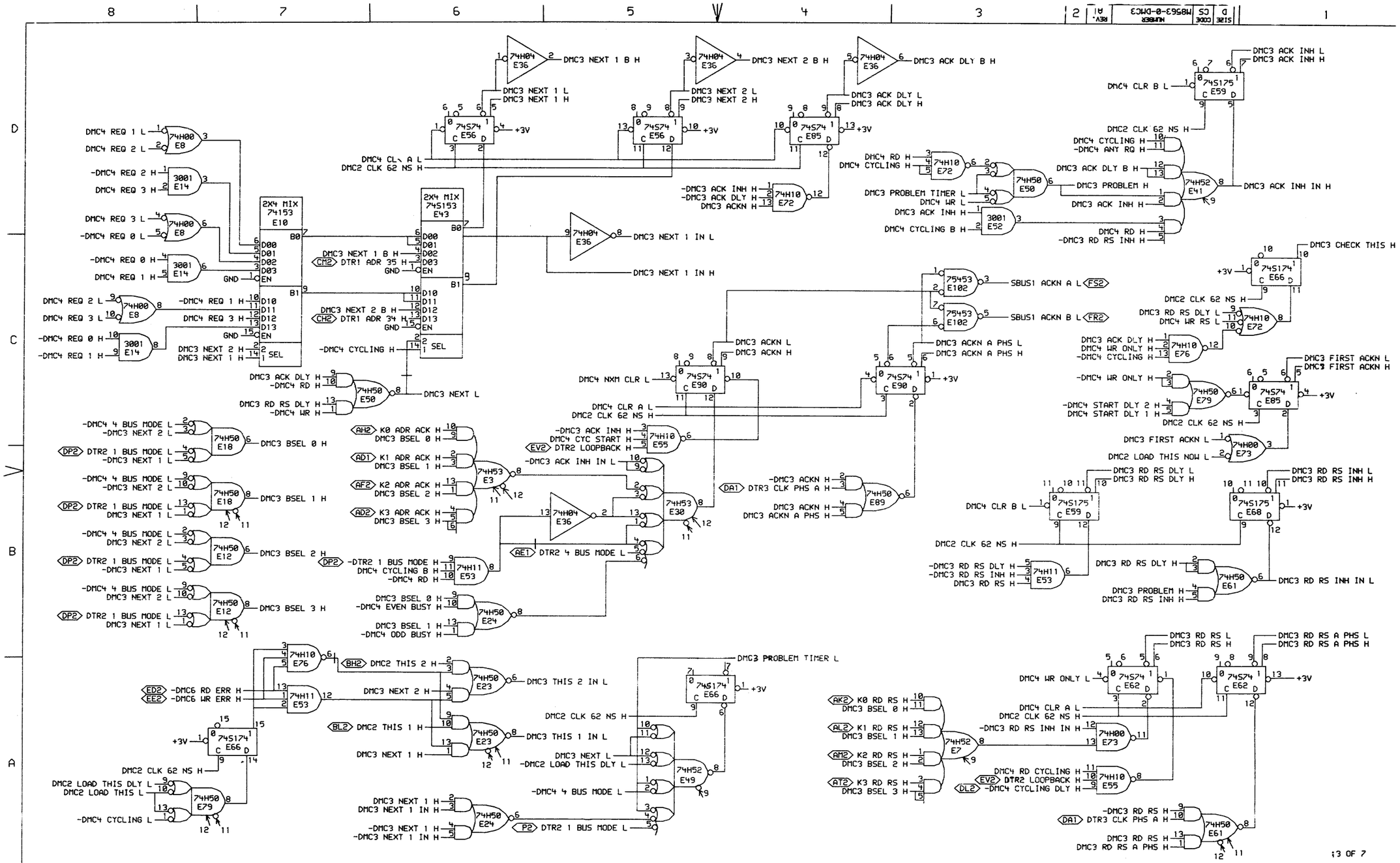

"THIS DRAWING AND SPECIFICATIONS, HEREIN, ARE THE PROPERTY OF DIGITAL EQUIPMENT CORPORATION AND SHALL NOT BE REPRODUCED OR COPIED OR USED IN WHOLE OR IN PART AS THE BASIS FOR THE MANUFACTURE OR SALE OF ITEMS WITHOUT WRITTEN PERMISSION. COPYRIGHT © 1975, DIGITAL EQUIPMENT CORPORATION"

REVISIONS		
CHK	CHANGE NO.	REV
	M8563-00001	A
	W.BRUCKERT	

M8563-00004 A1
W.BRUCKERT

digital

DRN: J. Feely 5/6/76 | DATE | ENG: W. Bruckert 6/9/75 | DATE
CHK'D: W. Stephens 5/6/75 | DATE | BOARD LOCATION: 1AF02
SHEET 1 OF 1
DMC3EXC[4,426] 06-JUN-75 07:42 | NEXT HIGHER ASSEMBLY:
FIRST USED ON OPTION/MODEL: DMA20 | B-DD-M8563-0

TITLE: ADAPTER INTERFACE DMA20 BOARD 2

SIZE	CODE	NUMBER	REV.
D	CS	M8563-0-DMC3	A1

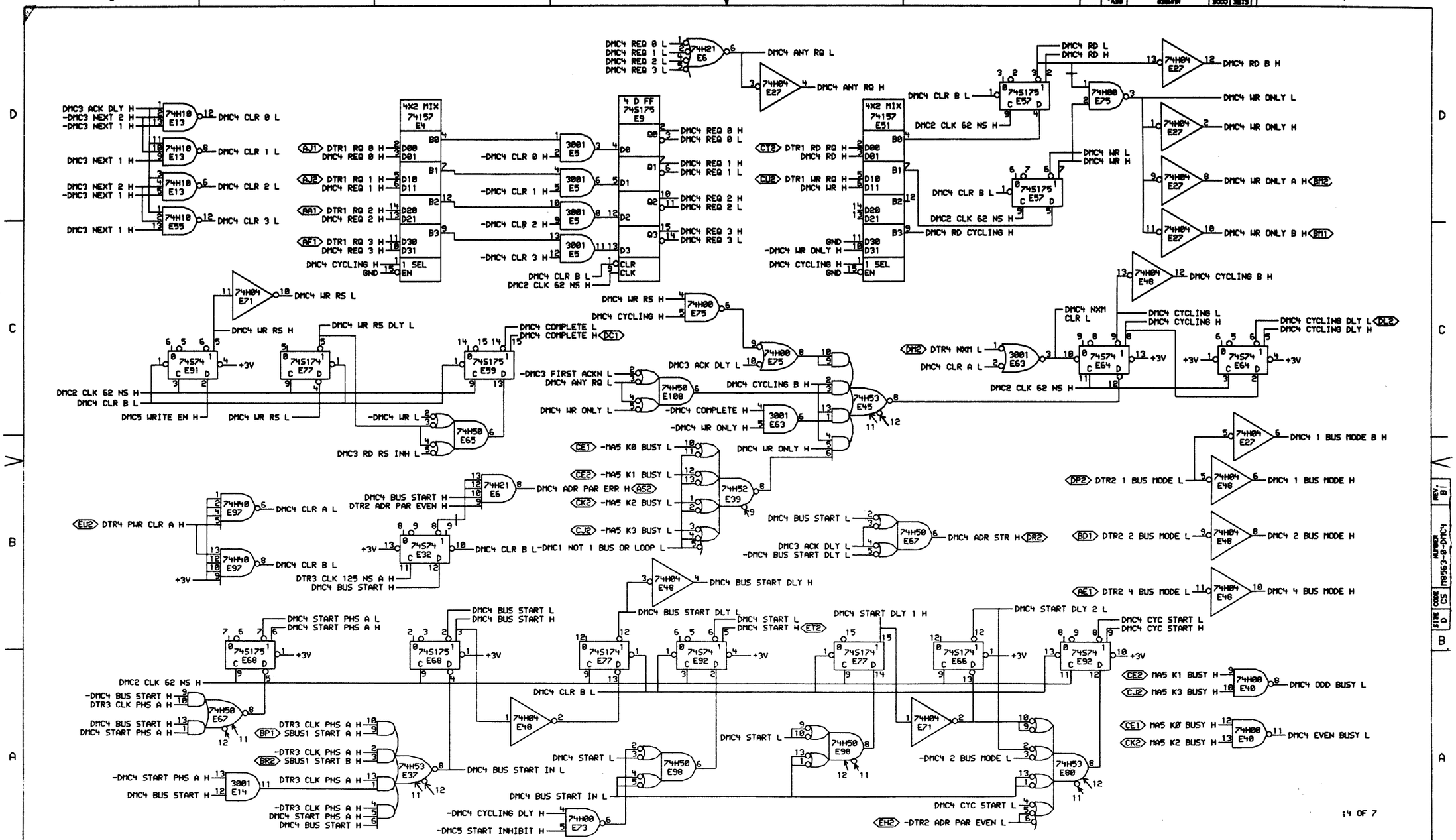

"THIS DRAWING AND SPECIFICATIONS, HEREIN, ARE THE PROPERTY OF DIGITAL EQUIPMENT CORPORATION AND SHALL NOT BE REPRODUCED OR COPIED OR USED IN WHOLE OR IN PART AS THE BASIS FOR THE MANUFACTURE OR SALE OF ITEMS WITHOUT WRITTEN PERMISSION.
COPYRIGHT © 1976, DIGITAL EQUIPMENT CORPORATION"

REVISIONS		
CHK	CHANGE NO.	REV
-	M8563-00073	B
	W. BRUCKERT	

M8563-00004 B1
W. BRUCKERT

digital

DRN. L. Loosley
CHK'D. W. Stephenson
DATE 25-MAY-76
ENG. W. Bruckert
DATE 6/21/76
BOARD LOCATION: 1AF02
SHEET 1 OF 1
DMC4EX.DRW[4,426] 25-MAY-76 09:25
NEXT HIGHER ASSEMBLY: B-DD-M8563-0
FIRST USED ON OPTION/MODEL: DMA20

TITLE: ADAPTER INTERFACE DMA20 BOARD 2

SIZE	CODE	NUMBER	REV.
D	CS	M8563-0-DMC4	B1

519

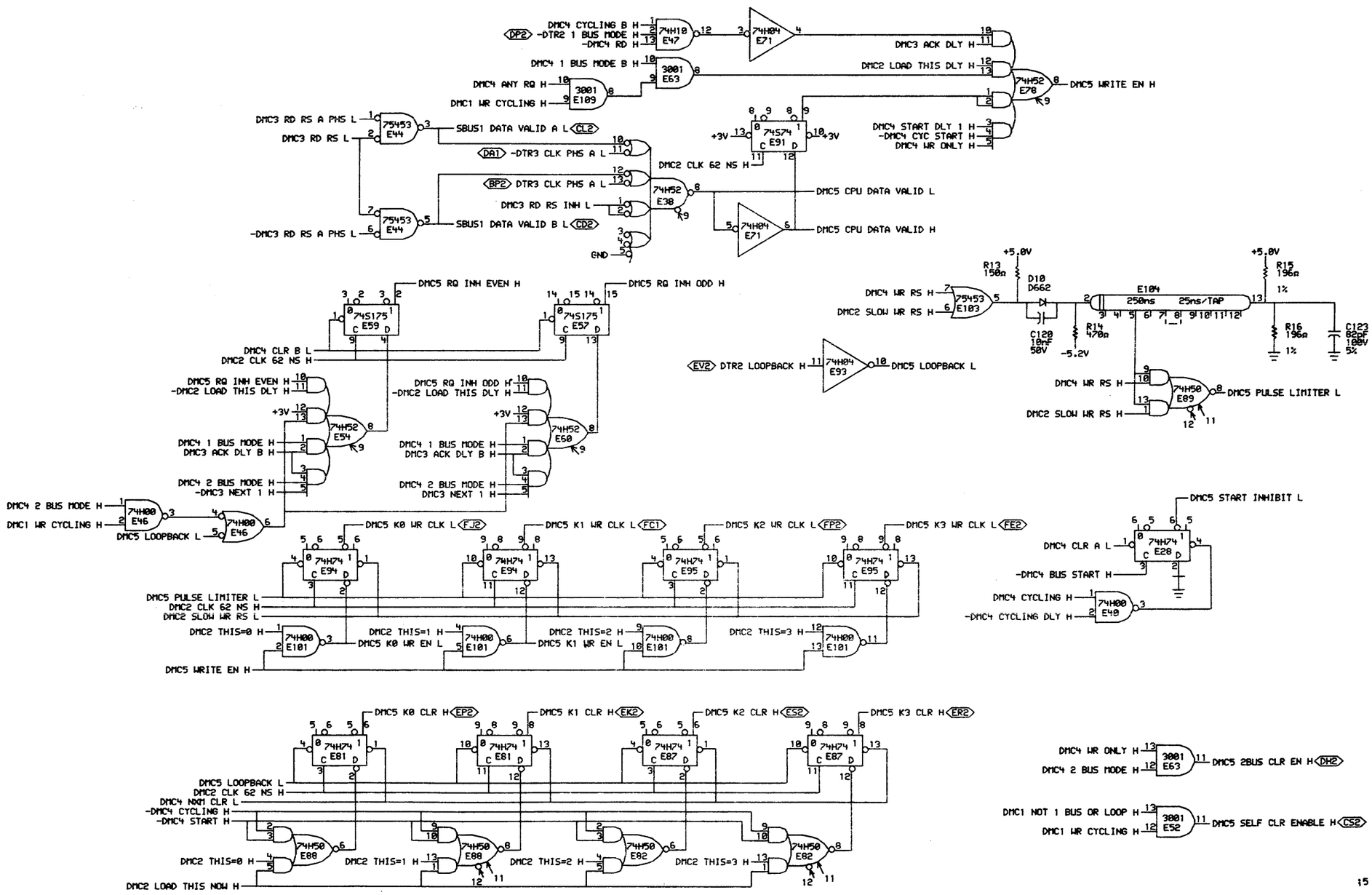

15 OF 7

"THIS DRAWING AND SPECIFICATIONS, HEREIN, ARE THE PROPERTY OF DIGITAL EQUIPMENT CORPORATION AND SHALL NOT BE REPRODUCED OR COPIED OR USED IN WHOLE OR IN PART AS THE BASIS FOR THE MANUFACTURE OR SALE OF ITEMS WITHOUT WRITTEN PERMISSION. COPYRIGHT © 1976, DIGITAL EQUIPMENT CORPORATION"

REVISIONS			M8563-00004	B1
CHK	CHANGE NO.	REV	W. BRUCKERT	
-	M8563-00003	B		
	W. BRUCKERT			

digital

DRN.	DATE 05-MAY-76	ENG.	DATE 6/21/76
CHK	DATE 5/24/76	BOARD LOCATION: 1AF02	
		SHEET 1 OF 1	
DMC5EX.DRW[4,426]	28-MAY-76 09:27	NEXT HIGHER ASSEMBLY:	
FIRST USED ON OPTION/MODEL: DMA20		B-DD-M8563-0	

TITLE: ADAPTER INTERFACE DMA20 BOARD 2

SIZE	CODE	NUMBER	REV.
D	CS	M8563-0-DMC5	B1

520

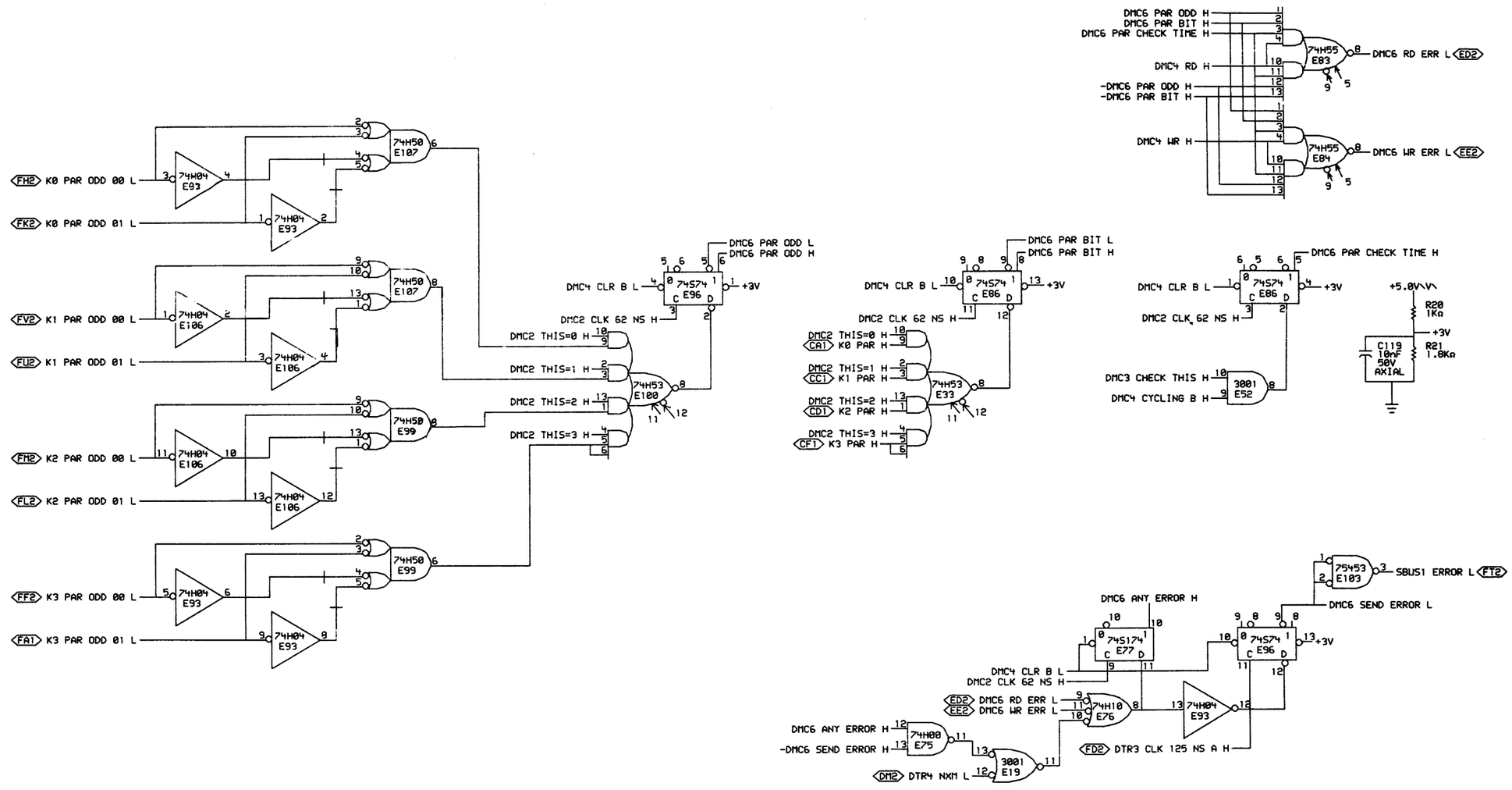

"THIS DRAWING AND SPECIFICATIONS, HEREIN, ARE THE PROPERTY OF DIGITAL EQUIPMENT CORPORATION AND SHALL NOT BE REPRODUCED OR COPIED OR USED IN WHOLE OR IN PART AS THE BASIS FOR THE MANUFACTURE OR SALE OF ITEMS WITHOUT WRITTEN PERMISSION. COPYRIGHT © 1975, DIGITAL EQUIPMENT CORPORATION"	REVISIONS: CHK / CHANGE NO. / REV — M8563-00001 / A — W.BRUCKERT	M8563-00004 W.BRUCKURT	digital — DRW J. Foorby 5/6/75; CHK'D 5/6/75; ENG. W. Bruckert 6/9/75; BOARD LOCATION: 1AF02; SHEET 1 OF 1; DMCSEX[4,426] 06-JUN-75 09:08; NEXT HIGHER ASSEMBLY: B-DD-M8563-0; FIRST USED ON OPTION/MODEL: DMA20

TITLE: ADAPTER INTERFACE DMA20 BOARD 2

SIZE	CODE	NUMBER	REV.
D	CS	M8563-0-DMC6	A1

S21

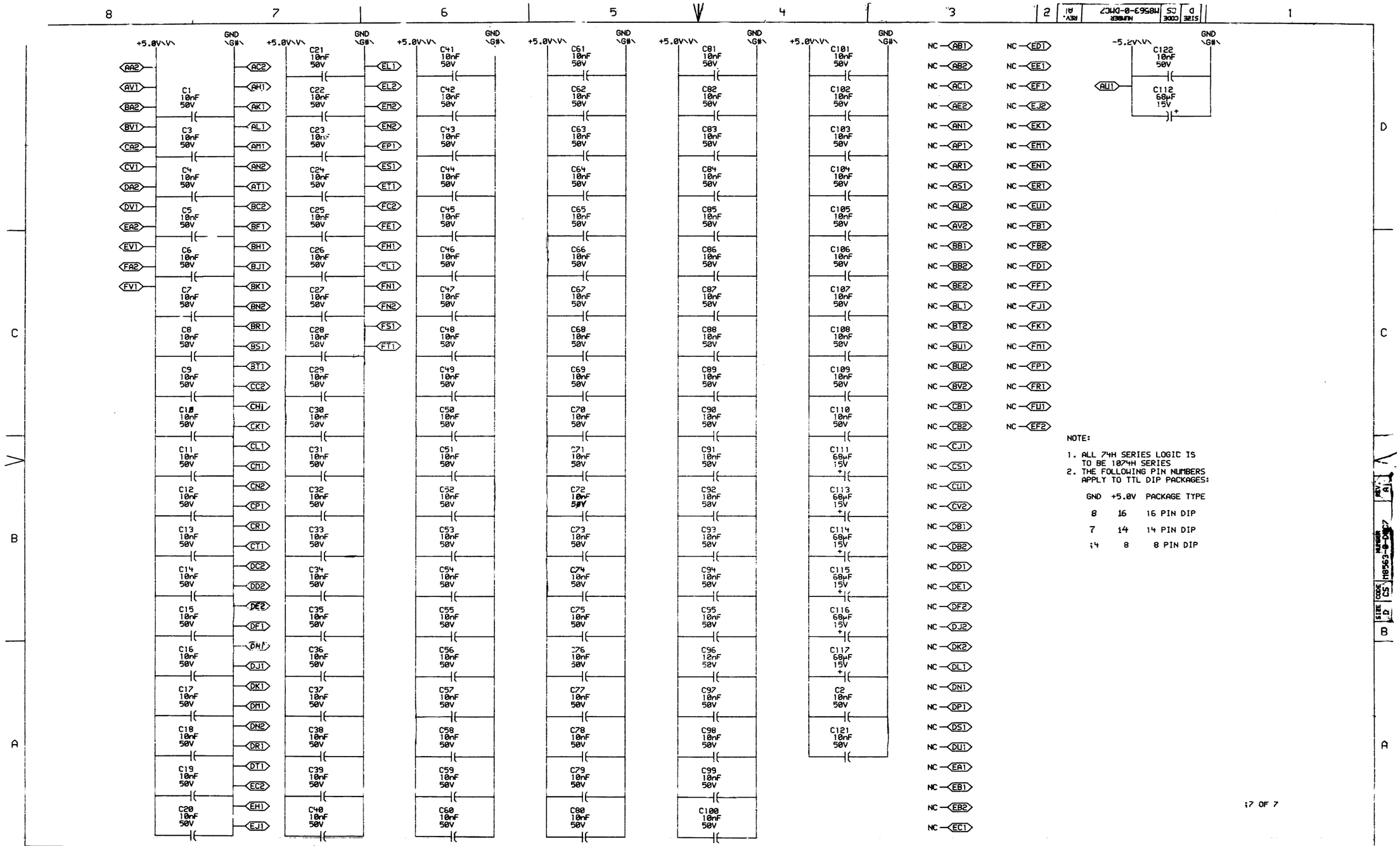

NOTE:

1. ALL 74H SERIES LOGIC IS TO BE 1074H SERIES
2. THE FOLLOWING PIN NUMBERS APPLY TO TTL DIP PACKAGES:

GND	+5.0V	PACKAGE TYPE
8	16	16 PIN DIP
7	14	14 PIN DIP
14	8	8 PIN DIP

17 OF 7

"THIS DRAWING AND SPECIFICATIONS, HEREIN, ARE THE PROPERTY OF DIGITAL EQUIPMENT CORPORATION AND SHALL NOT BE REPRODUCED OR COPIED OR USED IN WHOLE OR IN PART AS THE BASIS FOR THE MANUFACTURE OR SALE OF ITEMS WITHOUT WRITTEN PERMISSION.
COPYRIGHT © 1975, DIGITAL EQUIPMENT CORPORATION"

REVISIONS		
CHK	CHANGE NO.	REV
	M8563-00001	A
W.BRUCKERT		

M8563-00004 A1
W.BRUCKERT

digital

DRN S. Gooding DATE 5/6/75 ENG. DATE 6/6/75
CHK DATE BOARD LOCATION: TAF02
SHEET 1 OF 1
DMC7EX[4,426] 06-JUN-75 09:09 NEXT HIGHER ASSEMBLY
FIRST USED ON OPTION/MODEL: DMA20 B-DD-M8563-0

TITLE: ADAPTER INTERFACE POWER AND GROUND

SIZE	CODE	NUMBER	REV.
D	CS	M8563-0-DMC7	A1

522

REVISION CONTROL SHEET

CUSTOMER PRINT SET	MFG SET	DRAWING NO	NO OF SHT	DESCRIPTION	OPTION NO/FILE DATE	A	B	B	C	D	E	F
			-	MODULE REVISION								
		D-UA-M8563-Ø-Ø	8	DMA2Ø BOARD #2		-	A	A	B	C	D	E
		D-CS-M8563-Ø-DMC1	1	ADAPTER INTERFACE DMA2Ø BOARD 2		-	A	A	A	A	B	B
		D-CS-M8563-Ø-DMC2	1	BUS SELECTION DMA2Ø		-	A	A	A	B	C	D
		D-CS-M8563-Ø-DMC3	1	ADAPTER INTERFACE DMA2Ø BOARD 2		-	A	A	A	A	B	B
		D-CS-M8563-Ø-DMC4	1	ADAPTER INTERFACE DMA2Ø BOARD 2		-	A	A	A	B	C	C
		D-CS-M8563-Ø-DMC5	1	ADAPTER INTERFACE DMA2Ø BOARD 2		-	A	A	A	B	C	C
		D-CS-M8563-Ø-DMC6	1	ADAPTER INTERFACE DMA2Ø BOARD 2		-	A	A	A	A	B	B
		D-CS-M8563-Ø-DMC7	1	ADAPTER INTERFACE POWER AND GROUND		-	A	A	A	A	B	C
		K-CO-M8563-Ø-4	1	DMA2Ø BOARD #2 (CALDEC DATA BASE)		B	B	B	B	B	C	C
		D-AH-M8563-Ø-5	4	DMA2Ø BOARD #2		A	A	A	A	A	B	B
		B-MH-M8563-Ø-6	1	MODULE ECO HISTORY		-	A	B	C	D	E	F
		5010695	-	ETCH CIRCUIT BOARD		B	B	B	B	B	C	C
		P00-M8563-ØØ		PROCESS SHEET (REF ONLY)		-	-	-	-	-	-	-

REVISIONS

ECO NO	ORIG	00001	00001A	00002	00003	00004	00005
					NEW RELAYOUT VERSION		

CUSTOMER PRINT SET CODES
X = PRINT OF DOCUMENT INCLUDED IN PRINT SET
C = INCLUDES ALL PRINTS INDICATED ON DOCUMENT
S = CONFIDENTIAL AUTHORIZED SIGNATURE REQUIRED

TITLE		SIZE	CODE	NUMBER	REV
DMA2Ø BOARD #2	SHEET 3 OF 3	B	DD	M8563-Ø	E

523

THIS DRAWING AND SPECIFICATIONS, HEREIN, ARE THE PROPERTY OF DIGITAL EQUIPMENT CORPORATION AND SHALL NOT BE REPRODUCED OR COPIED OR USED IN WHOLE OR IN PART AS THE BASIS FOR THE MANUFACTURE OR SALE OF ITEMS WITHOUT WRITTEN PERMISSION.
COPYRIGHT © 1976 DIGITAL EQUIPMENT CORPORATION

NOTES:

CHK	CHANGE NO	REV

ETCH REV.	C
P.C. DESIGN DATA BASE REV.	C

SIGNATURES	DATE
DRN. T. Ermacle	29 JULY 76
CHK'D. [illegible]	10 DEC 76
ENG. [illegible]	10 DEC 76
PROJ. ENG. [illegible]	10 DEC 76
PROD. B. Exley	10 DEC 76
SCALE 2/1	
SHT. 2 OF 5	
NEXT HIGHER ASSY. B-DD-M8563-0	

digital

TITLE DMA20 BOARD #2

SIZE	CODE	NUMBER	REV
D	UA	M8563-0-0	E

524

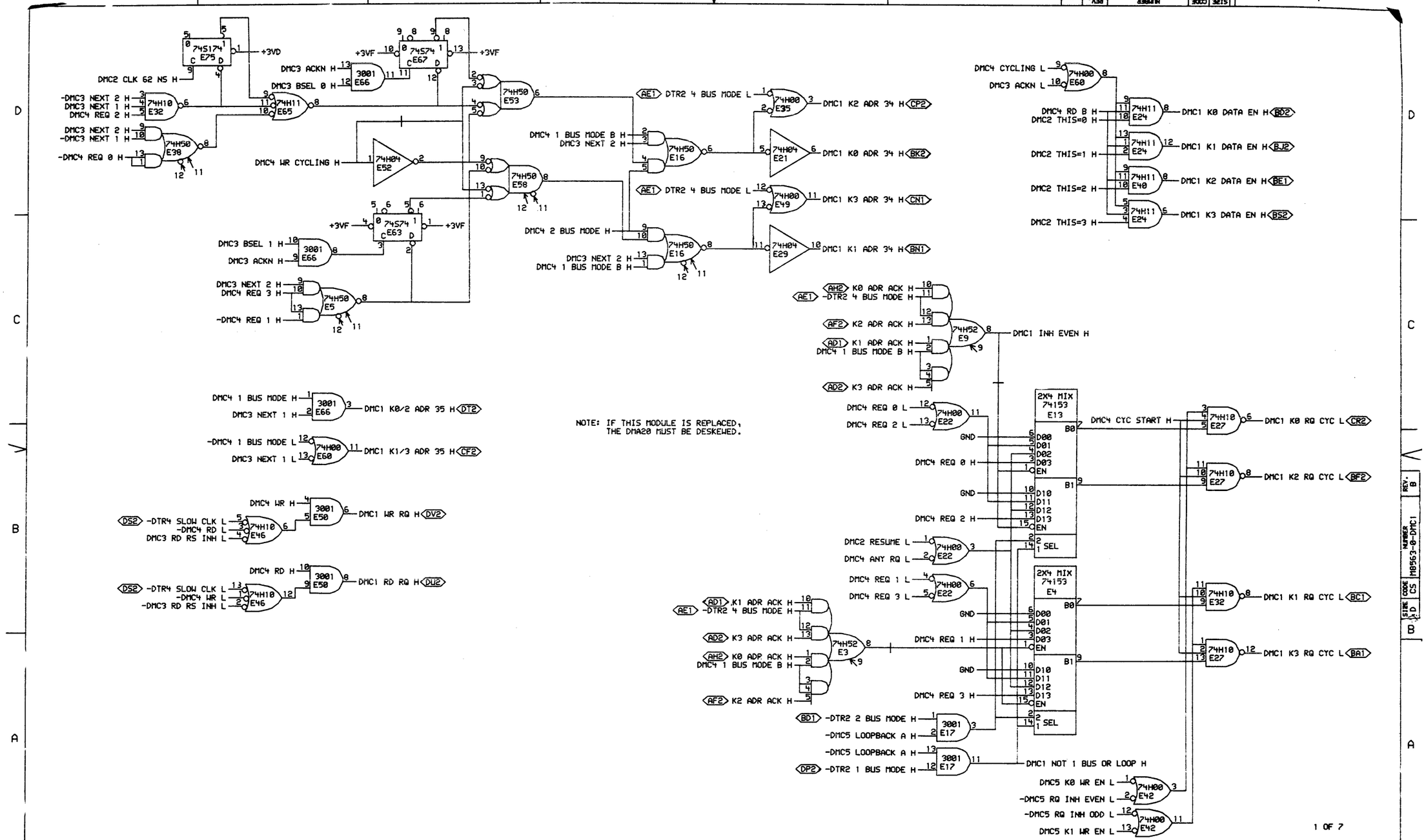

"THIS DRAWING AND SPECIFICATIONS, HEREIN, ARE THE PROPERTY OF DIGITAL EQUIPMENT CORPORATION AND SHALL NOT BE REPRODUCED OR COPIED OR USED IN WHOLE OR IN PART AS THE BASIS FOR THE MANUFACTURE OR SALE OF ITEMS WITHOUT WRITTEN PERMISSION. COPYRIGHT © 1976, DIGITAL EQUIPMENT CORPORATION"

REVISIONS		
CHK	CHANGE NO.	REV

digital

DRW.	DATE 10-NOV-76	ENG.	DATE 19 NOV 76
CHK	DATE 11/11/76	BOARD LOCATION: 1AF02	
		SHEET 1 OF 1	

DMC1ER.DRW4,56J 09-NOV-76 11:01

FIRST USED ON OPTION/MODEL: DMA20

NEXT HIGHER ASSEMBLY: B-DD-M8563-0

TITLE: ADAPTER INTERFACE DMA20 BOARD 2

SIZE	CODE	NUMBER	REV.
D	CS	M8563-0-DMC1	B

525

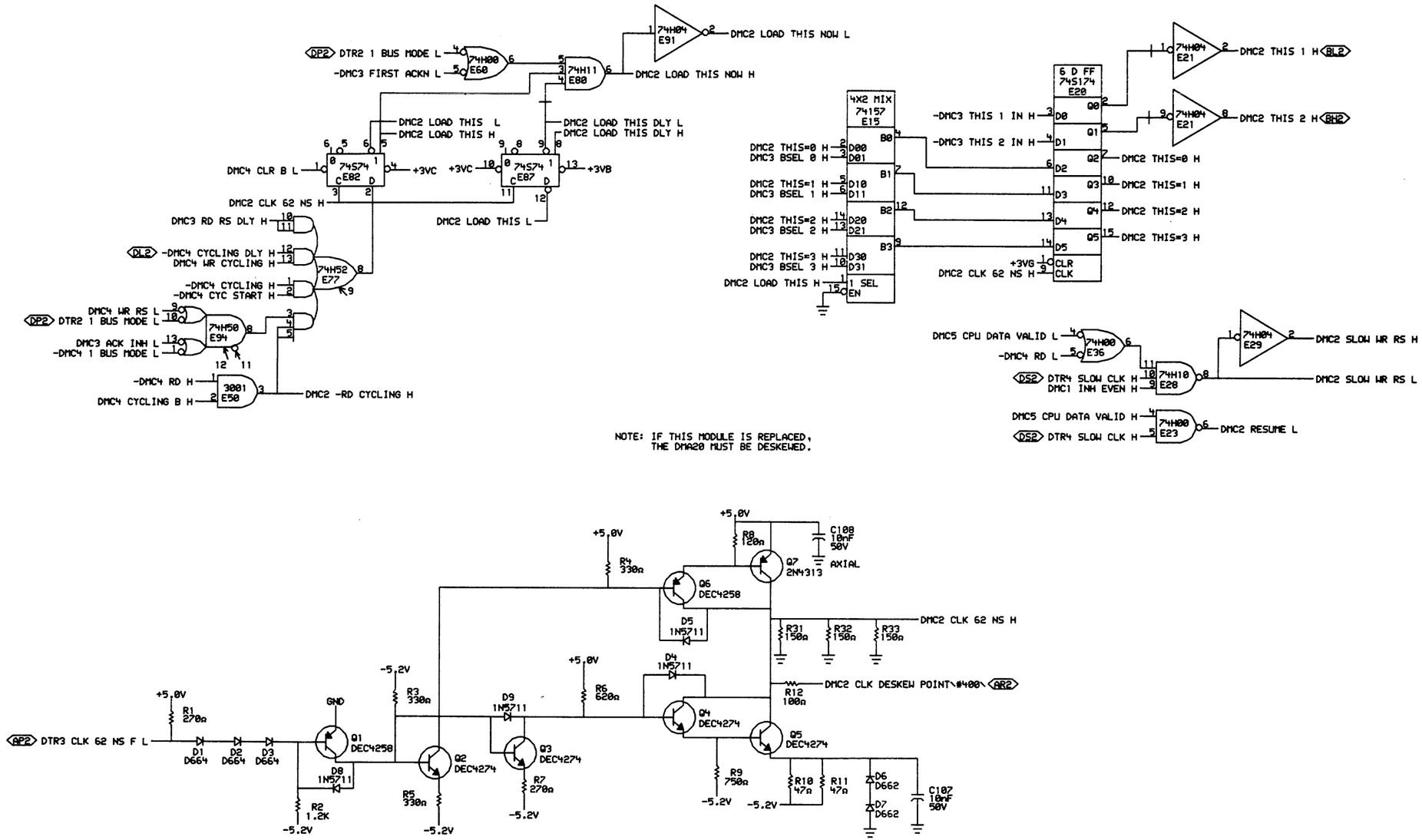

2 OF 7

"THIS DRAWING AND SPECIFICATIONS, HEREIN, ARE THE PROPERTY OF DIGITAL EQUIPMENT CORPORATION AND SHALL NOT BE REPRODUCED OR COPIED OR USED IN WHOLE OR IN PART AS THE BASIS FOR THE MANUFACTURE OR SALE OF ITEMS WITHOUT WRITTEN PERMISSION. "COPYRIGHT © 1977, DIGITAL EQUIPMENT CORPORATION"

REVISIONS		
CHK	CHANGE NO.	REV
–	M8563-0000A	D
	W. BRUCKERT	

DMC2ER.DRW[4,626] 20-APR-77 15:06

FIRST USED ON OPTION/MODEL: DMA20

DRN. DATE 20-APR-77 ENG. DATE 21APR77
CHK DATE 4/21/77 BOARD LOCATION: 1AF02
SHEET 1 OF 1
NEXT HIGHER ASSEMBLY: B-DD-M8563-0

TITLE: BUS SELECTION DMA20

SIZE	CODE	NUMBER	REV.
D	CS	M8563-0-DMC2	D

526

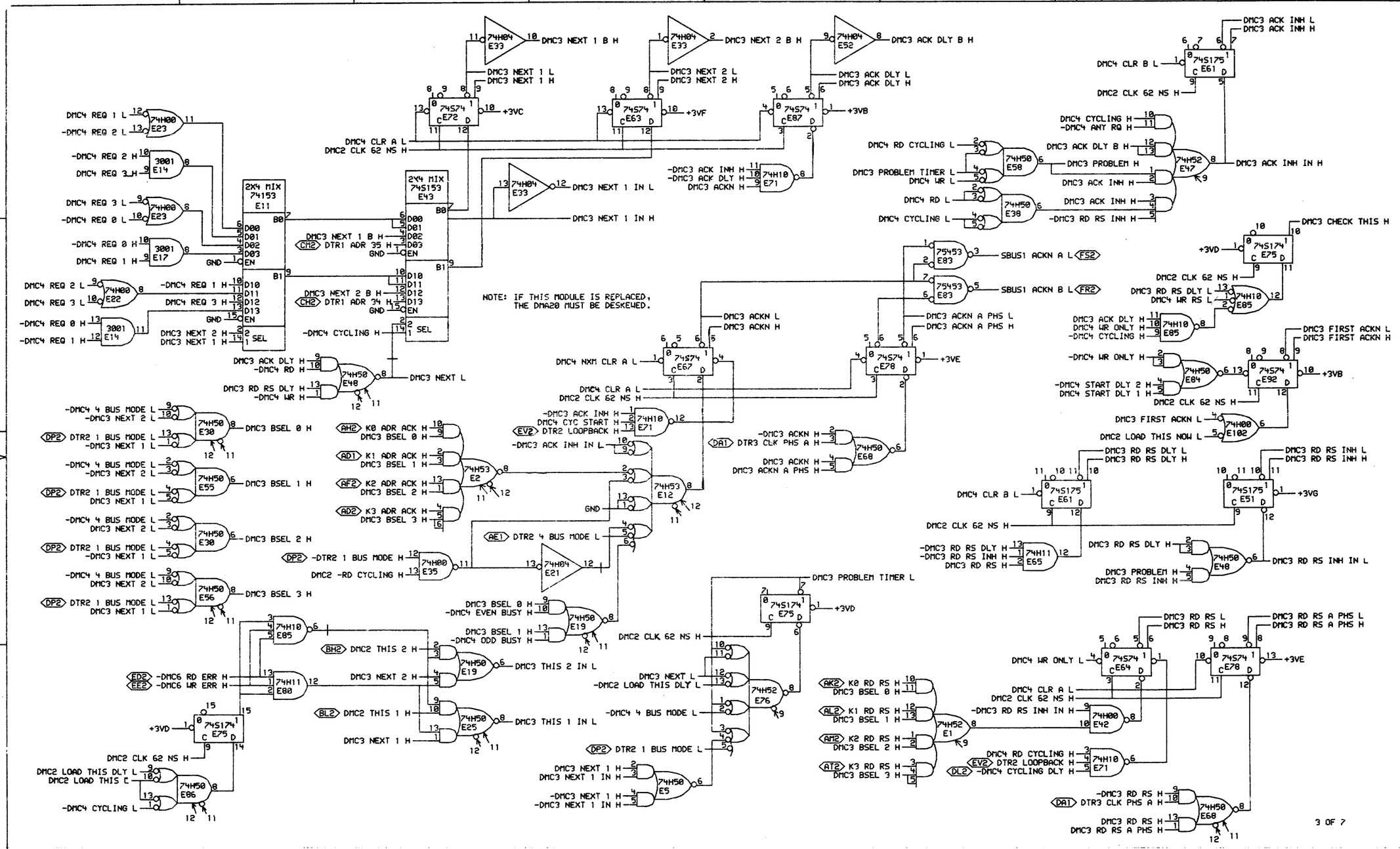

"THIS DRAWING AND SPECIFICATIONS, HEREIN, ARE THE PROPERTY OF DIGITAL EQUIPMENT CORPORATION AND SHALL NOT BE REPRODUCED OR COPIED OR USED IN WHOLE OR IN PART AS THE BASIS FOR THE MANUFACTURE OR SALE OF ITEMS WITHOUT WRITTEN PERMISSION.
"COPYRIGHT © 1976, DIGITAL EQUIPMENT CORPORATION"

REVISIONS		
CHK	CHANGE NO.	REV

digital

DRN. | DATE 11-NOV-76 | ENG. | DATE 16 NOV 76
CHK'D | DATE | BOARD LOCATION: 1AF02
DMC3ER.DRW[4,56] 08-NOV-76 11:04 | SHEET 1 OF 1 | NEXT HIGHER ASSEMBLY:
FIRST USED ON OPTION/MODEL: DMA20 | B-DD-M8563-0

TITLE: ADAPTER INTERFACE DMA20 BOARD 2

SIZE	CODE	NUMBER	REV.
D	CS	M8563-0-DMC3	B

527

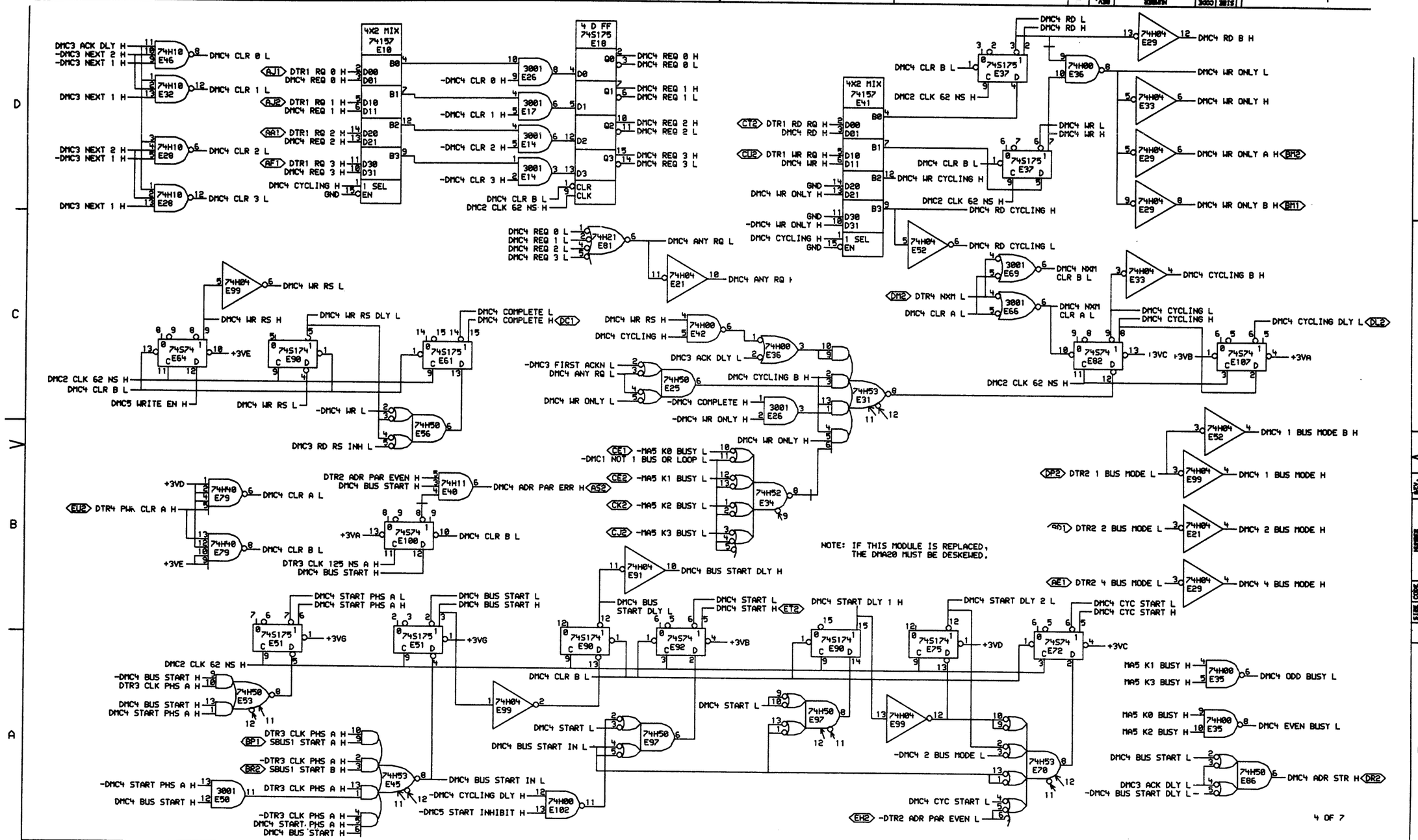

"THIS DRAWING AND SPECIFICATIONS, HEREIN, ARE THE PROPERTY OF DIGITAL EQUIPMENT CORPORATION AND SHALL NOT BE REPRODUCED OR COPIED OR USED IN WHOLE OR IN PART AS THE BASIS FOR THE MANUFACTURE OR SALE OF ITEMS WITHOUT WRITTEN PERMISSION. COPYRIGHT © 1976, DIGITAL EQUIPMENT CORPORATION"

REVISIONS		
CHK	CHANGE NO.	REV

digital

DMC4ER.DRW[4,563] 18-NOV-76 14:14

FIRST USED ON OPTION/MODEL: DMA20

DRN. S. Landry DATE 15-NOV-76
CHK'D. C. Mathews 11/17/76 DATE
ENG. M. Brechet DATE 14 NOV 76
BOARD LOCATION: 1AF02
SHEET 1 OF 1
NEXT HIGHER ASSEMBLY: B-DD-M8563-0

TITLE: ADAPTER INTERFACE DMA20 BOARD 2

SIZE	CODE	NUMBER	REV.
D	CS	M8563-0-DMC4	C

528

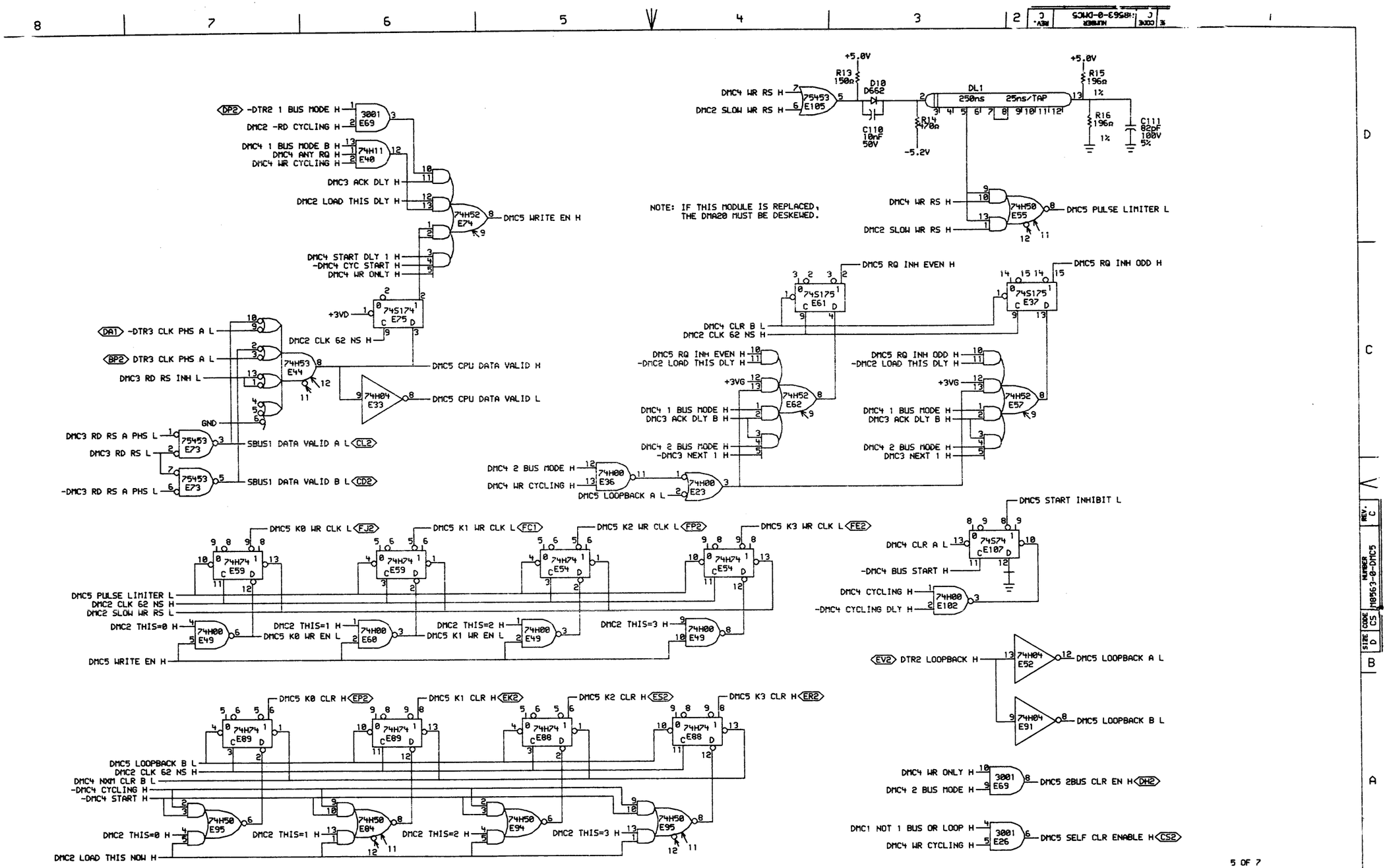

5 OF 7

"THIS DRAWING AND SPECIFICATIONS, HEREIN, ARE THE PROPERTY OF DIGITAL EQUIPMENT CORPORATION AND SHALL NOT BE REPRODUCED OR COPIED OR USED IN WHOLE OR IN PART AS THE BASIS FOR THE MANUFACTURE OR SALE OF ITEMS WITHOUT WRITTEN PERMISSION. COPYRIGHT © 1976, DIGITAL EQUIPMENT CORPORATION"

REVISIONS		
CHK	CHANGE NO.	REV

digital

DRN. S. Loosby | DATE 18-NOV-76 | ENG. W. Bruckert | DATE 16 NOV 76
CHK'D. [illegible] | DATE | BOARD LOCATION: 1AF02
SHEET 1 OF 1

DMC5ER.DRW[4,56] 09-NOV-76 11:07 | NEXT HIGHER ASSEMBLY: B-DD-M8563-0
FIRST USED ON OPTION/MODEL: DMA20

TITLE: ADAPTER INTERFACE DMA20 BOARD 2

SIZE	CODE	NUMBER	REV.
D	CS	M8563-0-DMC5	C

529

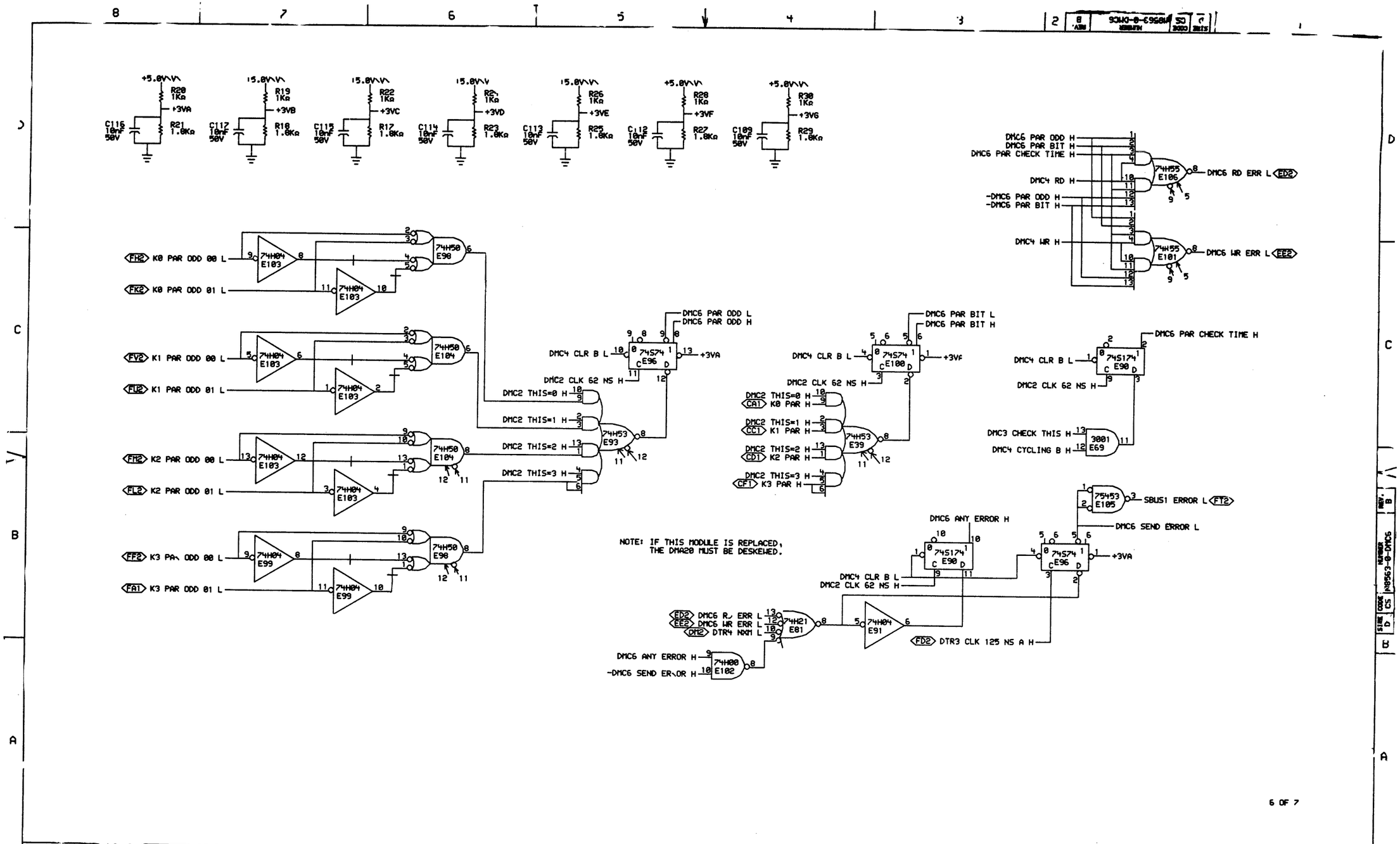

6 OF 7

"THIS DRAWING AND SPECIFICATIONS, HEREIN, ARE THE PROPERTY OF DIGITAL EQUIPMENT CORPORATION AND SHALL NOT BE REPRODUCED OR COPIED OR USED IN WHOLE OR IN PART AS THE BASIS FOR THE MANUFACTURE OR SALE OF ITEMS WITHOUT WRITTEN PERMISSION.
COPYRIGHT © 1976, DIGITAL EQUIPMENT CORPORATION"

REVISIONS		
CHK	CHANGE NO.	REV

DRW. J. Loosby DATE 10-NOV-76 ENG. V. Bruchet DATE 16 NOV 76
CHK'D DATE
DRAWN 5.561 05-NOV-76 11:09 BOARD LOCATION: 1AF02
SHEET 1 OF 1
NEXT H GHER ASSEMBLY: B-DD-M8563-0
ON OPTION/MODEL: DMA20
DMCGER FIRST USED

TITLE: ADAPTER INTERFACE DMA20 BOARD 2

SIZE	CODE	NUMBER	REV.
D	CS	M8563-0-DMC6	B

530

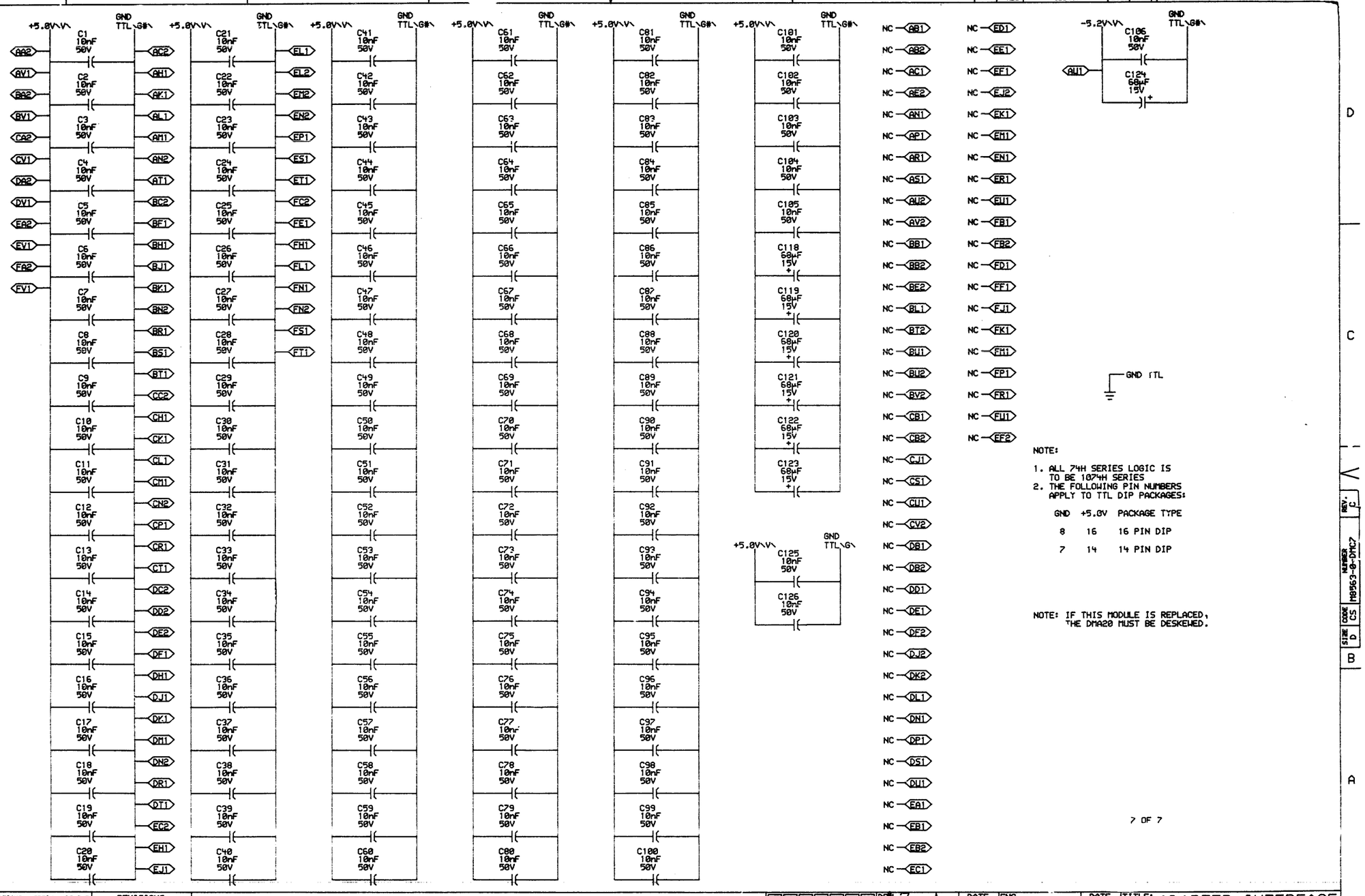

"THIS DRAWING AND SPECIFICATIONS, HEREIN, ARE THE PROPERTY OF DIGITAL EQUIPMENT CORPORATION AND SHALL NOT BE REPRODUCED OR COPIED OR USED IN WHOLE OR IN PART AS THE BASIS FOR THE MANUFACTURE OR SALE OF ITEMS WITHOUT WRITTEN PERMISSION.
COPYRIGHT © 1977, DIGITAL EQUIPMENT CORPORATION"

REVISIONS		
CHK	CHANGE NO.	REV
—	M8563-000	C

digital	DRN.	DATE 11-APR-77	ENG.
	CHK'D	DATE	BOARD LOCATION: 1AF02
DMC7ER.DRW[4,626]	11-APR-77 10:01	SHEET 1 OF 1	NEXT HIGHER ASSEMBLY:
FIRST USED ON OPTION/MODEL:	DMA20	B-DD-M8563-0	

TITLE: ADAPTER INTERFACE POWER AND GROUND

SIZE	CODE	NUMBER	REV.
D	CS	M8563-0-DMC7	C

S31

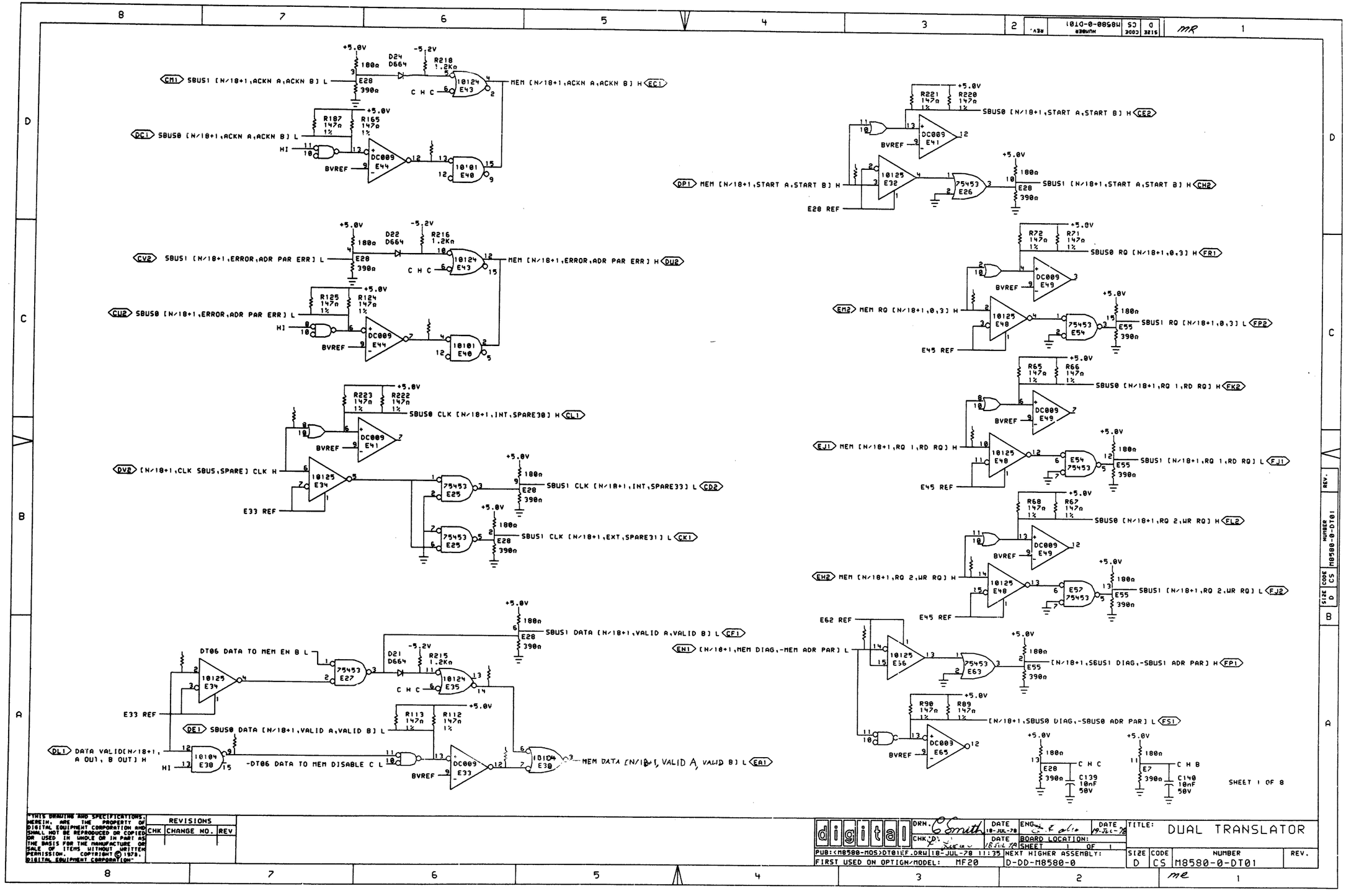

"THIS DRAWING AND SPECIFICATIONS, HEREIN, ARE THE PROPERTY OF DIGITAL EQUIPMENT CORPORATION AND SHALL NOT BE REPRODUCED OR COPIED OR USED IN WHOLE OR IN PART AS THE BASIS FOR THE MANUFACTURE OR SALE OF ITEMS WITHOUT WRITTEN PERMISSION. COPYRIGHT © 1978, DIGITAL EQUIPMENT CORPORATION"

REVISIONS		
CHK	CHANGE NO.	REV

digital

DRN. G Smith DATE 18-JUL-78 ENG. DATE 19-JUL-78 TITLE: DUAL TRANSLATOR

CHK. D. DATE 18 JUL 78 BOARD LOCATION: SHEET 1 OF 1

PUB:<M8580-MOS>DT01EF.DRW 18-JUL-78 11:35 NEXT HIGHER ASSEMBLY: D-DD-M8580-0

FIRST USED ON OPTION/MODEL: MF20

SIZE	CODE	NUMBER	REV.
D	CS	M8580-0-DT01	

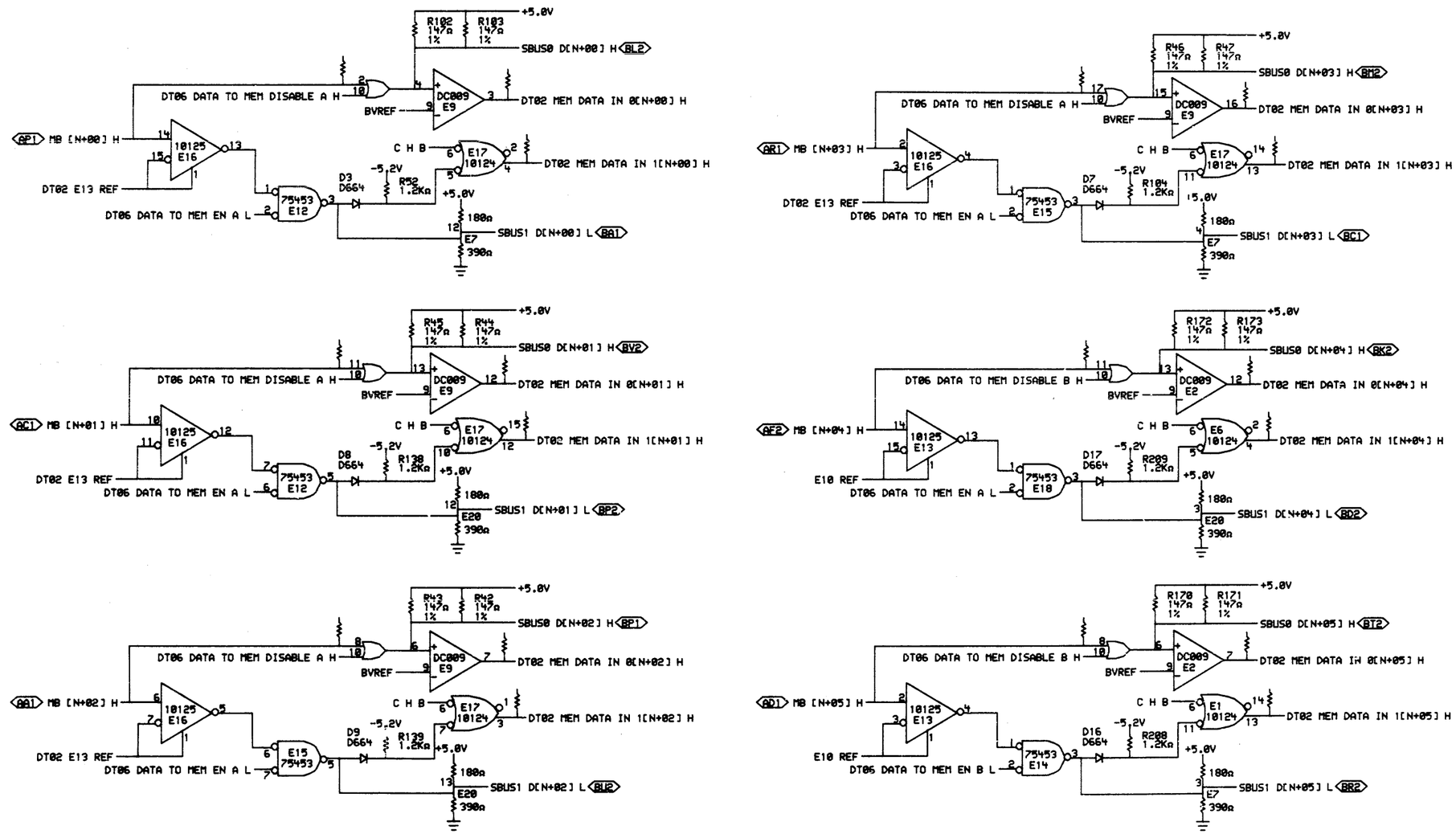

SHEET 2 OF 8

"THIS DRAWING AND SPECIFICATIONS, HEREIN, ARE THE PROPERTY OF DIGITAL EQUIPMENT CORPORATION AND SHALL NOT BE REPRODUCED OR COPIED OR USED IN WHOLE OR IN PART AS THE BASIS FOR THE MANUFACTURE OR SALE OF ITEMS WITHOUT WRITTEN PERMISSION. COPYRIGHT © 1978, DIGITAL EQUIPMENT CORPORATION"

REVISIONS		
CHK	CHANGE NO.	REV

digital

PUB:<M8580-MOS>DT02EF.DRW 05-JUN-78 10:33

FIRST USED ON OPTION/MODEL: MF20

DRN. P. Smith DATE 14-JUL-78
CHK'D Y. Lucin DATE 18-JUL-78
ENG. D J Chin DATE 7-18-78
BOARD LOCATION: SHEET 1 OF 1
NEXT HIGHER ASSEMBLY: D-DD-M8580-0

TITLE: DUAL TRANSLATOR DATA TRNCVR 0-5

SIZE	CODE	NUMBER	REV.
D	CS	M8580-0-DT02	

MR

533

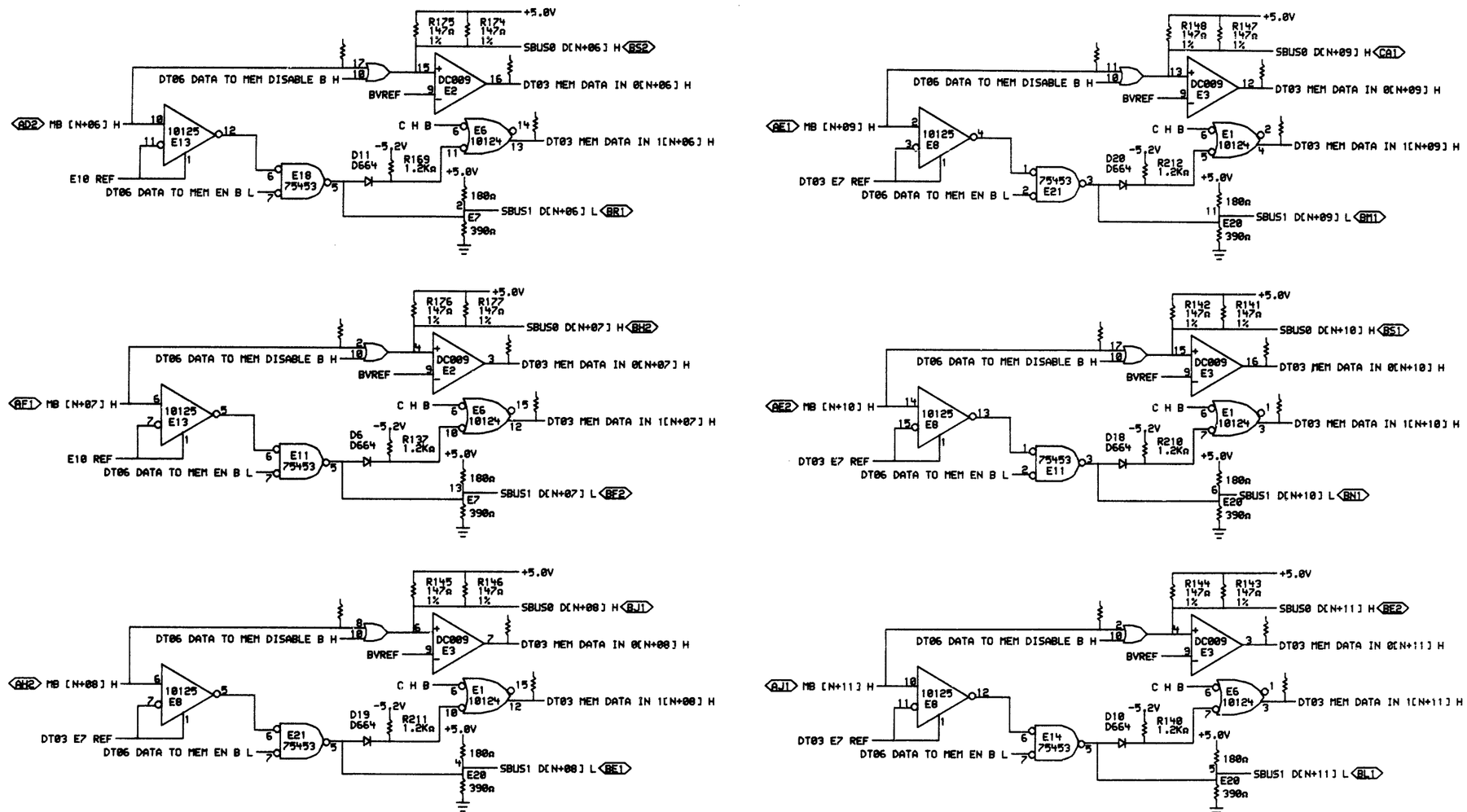

SHEET 3 OF 8

"THIS DRAWING AND SPECIFICATIONS, HEREIN, ARE THE PROPERTY OF DIGITAL EQUIPMENT CORPORATION AND SHALL NOT BE REPRODUCED OR COPIED OR USED IN WHOLE OR IN PART AS THE BASIS FOR THE MANUFACTURE OR SALE OF ITEMS WITHOUT WRITTEN PERMISSION. COPYRIGHT © 1970, DIGITAL EQUIPMENT CORPORATION."

REVISIONS		
CHK	CHANGE NO.	REV

DRN. C Smith DATE 14-JUL-78 ENG. D J Chu DATE 7-18-78
CHK. D. Lucin DATE 18-JUL-78 BOARD LOCATION: SHEET 1 OF 1
PUB:<M8580-MOS>DT03EF.DRW 06-JUN-78 10:24 NEXT HIGHER ASSEMBLY: D-DD-M8580-0
FIRST USED ON OPTION/MODEL: MF20

TITLE: DUAL TRANSLATOR DATA TRNCVR 6-11

SIZE	CODE	NUMBER	REV.
D	CS	M8580-0-DT03	

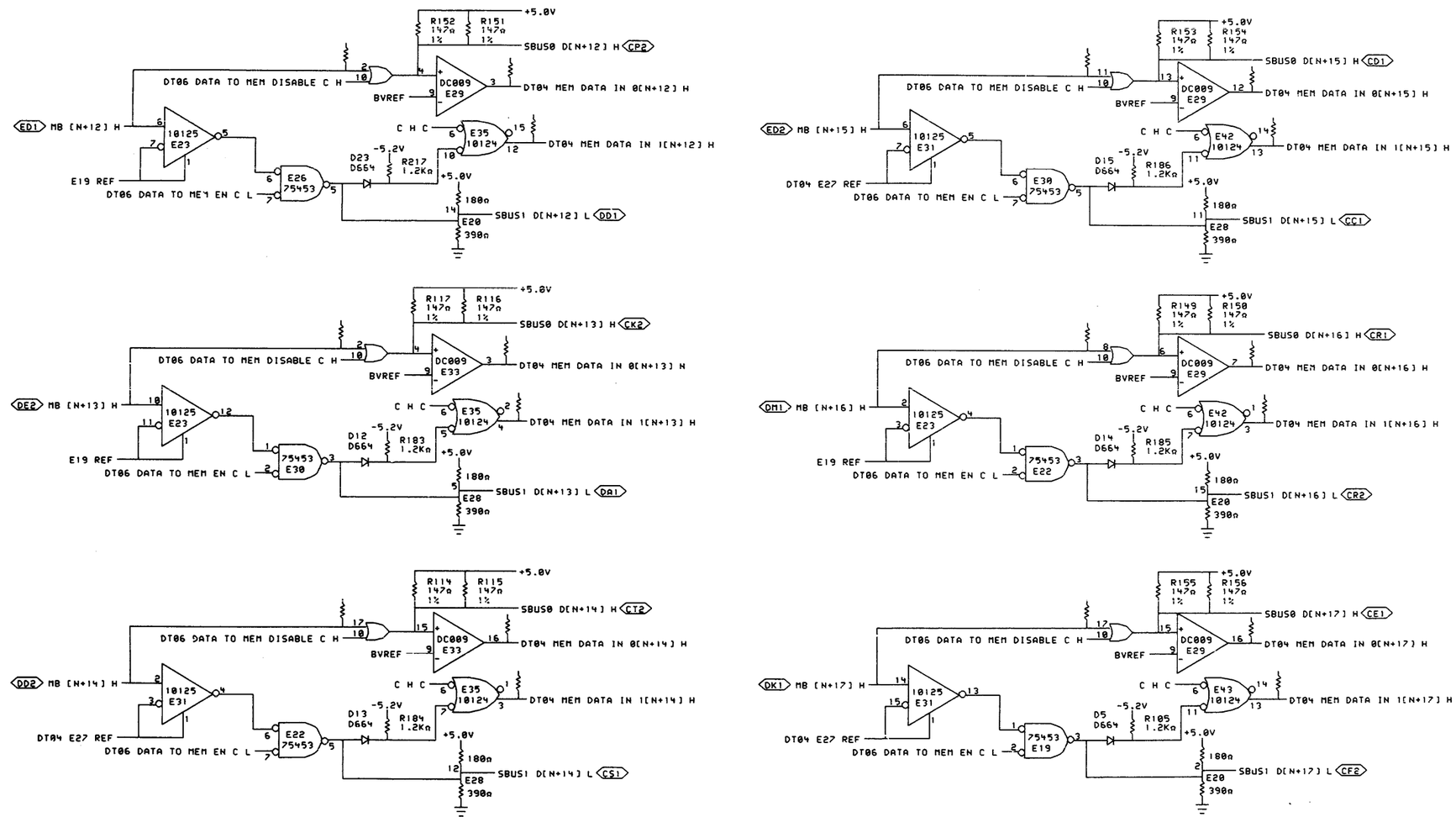

SHEET 4 OF 8

"THIS DRAWING AND SPECIFICATIONS, HEREIN, ARE THE PROPERTY OF DIGITAL EQUIPMENT CORPORATION AND SHALL NOT BE REPRODUCED OR COPIED OR USED IN WHOLE OR IN PART AS THE BASIS FOR THE MANUFACTURE OR SALE OF ITEMS WITHOUT WRITTEN PERMISSION. COPYRIGHT © 1979, DIGITAL EQUIPMENT CORPORATION"

REVISIONS		
CHK	CHANGE NO.	REV

DRN. C Smith DATE 18-JUL-78 ENG. DATE 17-Jul-78
CHK DATE 16-Jul-78 BOARD LOCATION: SHEET 1 OF 1
PUB:<M8580-MOS>DT04EF.DRW 18-JUL-78 11:38 NEXT HIGHER ASSEMBLY: D-DD-M8580-0
FIRST USED ON OPTION/MODEL: MF20

TITLE: DUAL TRANSLATOR DATA TRNCVR 12-17

SIZE	CODE	NUMBER	REV.
D	CS	M8580-0-DT04	

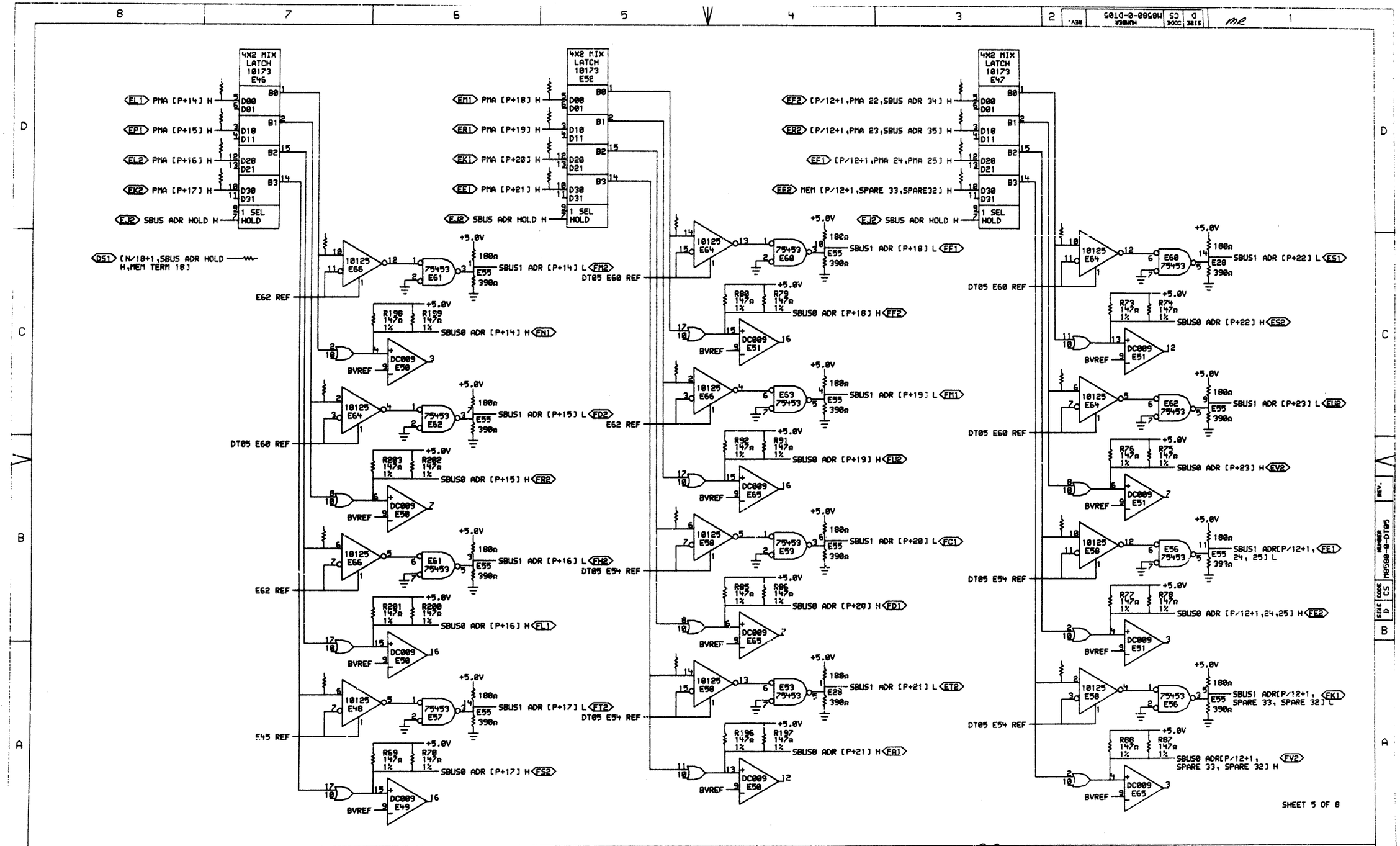

"THIS DRAWING AND SPECIFICATIONS, HEREIN, ARE THE PROPERTY OF DIGITAL EQUIPMENT CORPORATION AND SHALL NOT BE REPRODUCED OR COPIED OR USED IN WHOLE OR IN PART AS THE BASIS FOR THE MANUFACTURE OR SALE OF ITEMS WITHOUT WRITTEN PERMISSION. COPYRIGHT © 1970, DIGITAL EQUIPMENT CORPORATION"

REVISIONS		
CHK	CHANGE NO.	REV

digital

PUB:<M8580-MOS>DT05EF.DRW 06-JUN-79 10:36

FIRST USED ON OPTION/MODEL: MF20

DRN. C Smith DATE 14-JUL-78 ENG. S J Chin DATE 7-17-78

CHK'D. J. Lucin DATE 18-Jul-78 BOARD LOCATION: SHEET 1 OF 1

NEXT HIGHER ASSEMBLY: D-DD-M8580-0

TITLE: DUAL TRANSLATOR ADDRESS DRIVERS

SIZE	CODE	NUMBER	REV.
D	CS	M8580-0-DT05	

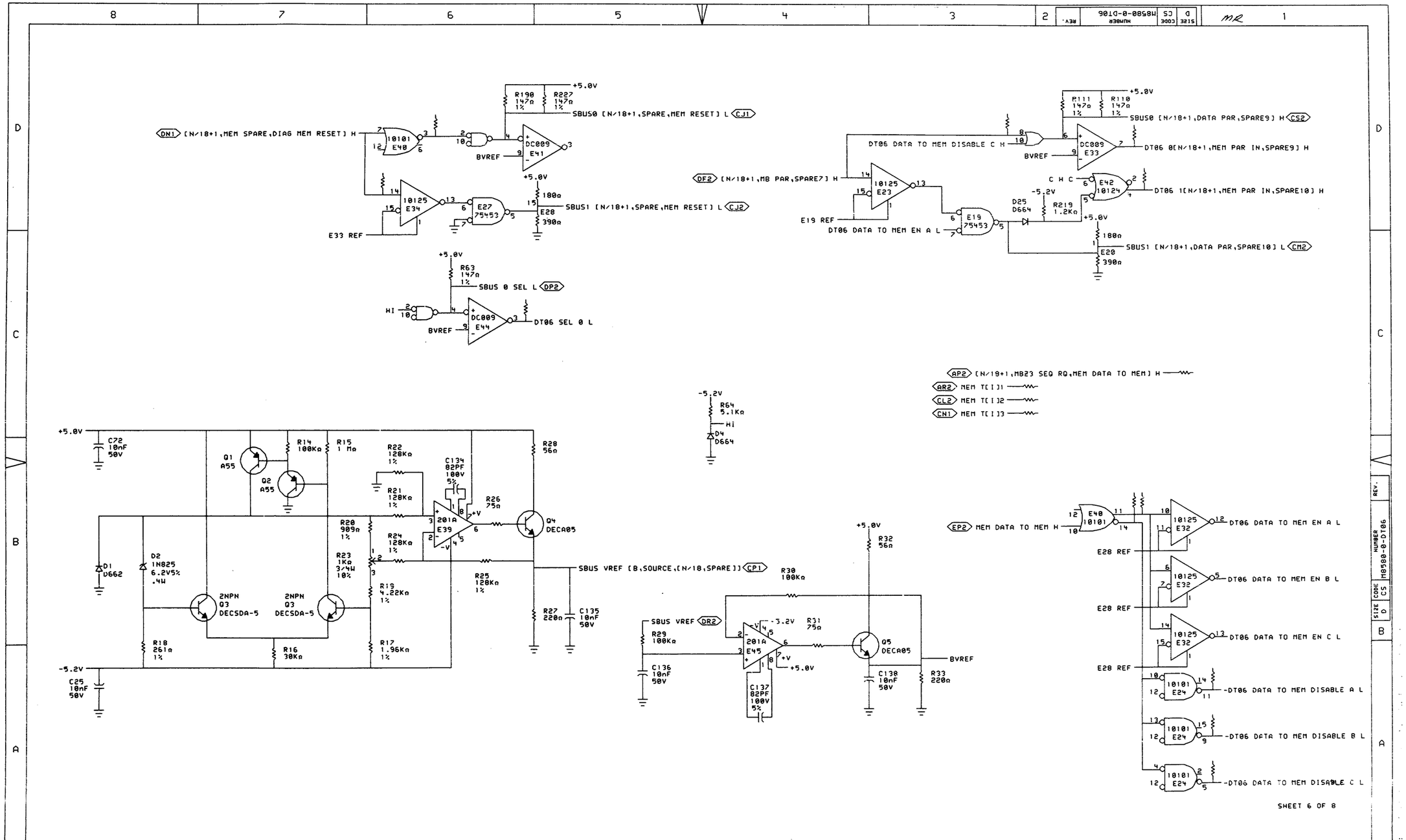

"THIS DRAWING AND SPECIFICATIONS, HEREIN, ARE THE PROPERTY OF DIGITAL EQUIPMENT CORPORATION AND SHALL NOT BE REPRODUCED OR COPIED OR USED IN WHOLE OR IN PART AS THE BASIS FOR THE MANUFACTURE OR SALE OF ITEMS WITHOUT WRITTEN PERMISSION. COPYRIGHT © 1978, DIGITAL EQUIPMENT CORPORATION"

REVISIONS		
CHK	CHANGE NO.	REV

digital

DRN. C. Smith DATE 18-JUL-78 ENG. E. Cole DATE 19-JUL-78
CHK. DATE 18-JUL-78 BOARD LOCATION: SHEET 1 OF 1
PUB:<M8580-MOS>DT06EF.DRW 18-JUL-78 11:30 NEXT HIGHER ASSEMBLY: D-DD-M8580-0
FIRST USED ON OPTION/MODEL: MF20

TITLE: DUAL TRANSLATOR CTRL & REF VOLT

SIZE	CODE	NUMBER	REV.
D	CS	M8580-0-DT06	

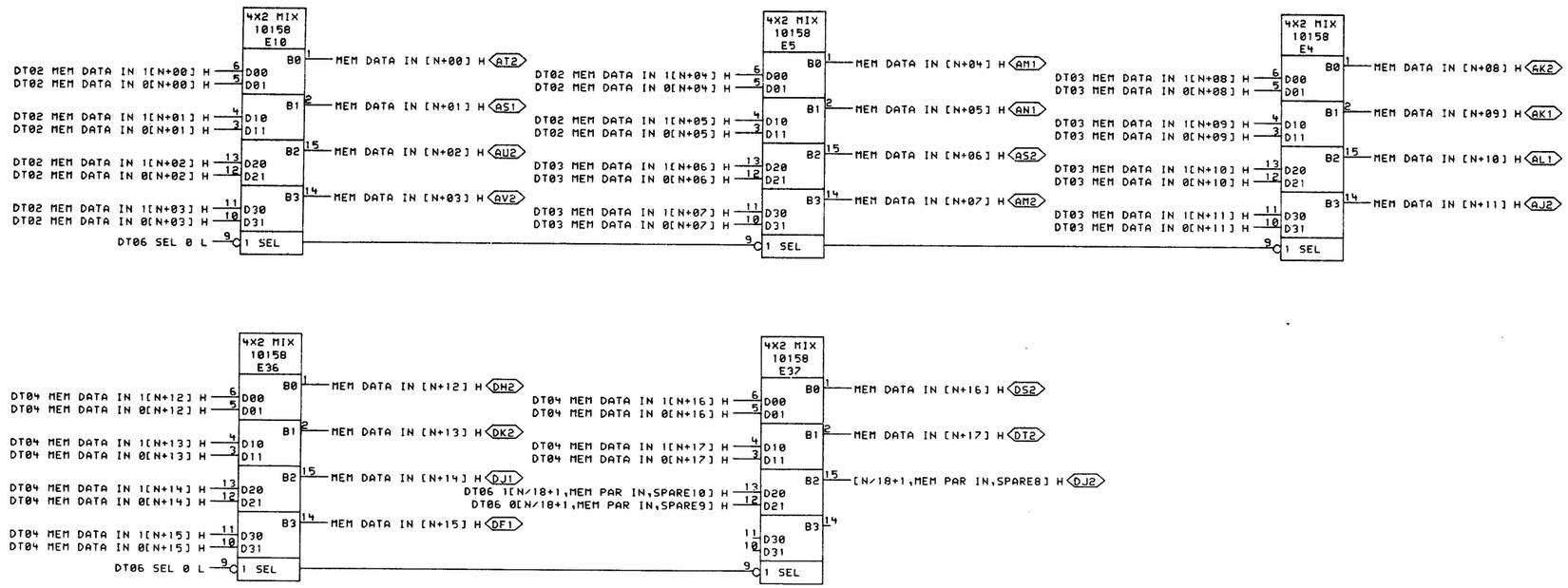

SHEET 7 OF 8

"THIS DRAWING AND SPECIFICATIONS, HEREIN, ARE THE PROPERTY OF DIGITAL EQUIPMENT CORPORATION AND SHALL NOT BE REPRODUCED OR COPIED OR USED IN WHOLE OR IN PART AS THE BASIS FOR THE MANUFACTURE OR SALE OF ITEMS WITHOUT WRITTEN PERMISSION. COPYRIGHT © 1970, DIGITAL EQUIPMENT CORPORATION"

REVISIONS		
CHK	CHANGE NO.	REV

digital

DRN. C Smith DATE 06-JUN-78 ENG. DJ Chen DATE 23-Jun-78
CHK. D. Lucier DATE 18 JUL 78 BOARD LOCATION:
SHEET 1 OF 1
DT07EF.DRW[4,672] 05-JUN-78 16:53 NEXT HIGHER ASSEMBLY:
FIRST USED ON OPTION/MODEL: MF20 D-DD-M8580-0

TITLE: BUS SELECT MEM DATA DRVRS

SIZE	CODE	NUMBER	REV.
D	CS	M8580-0-DT07	

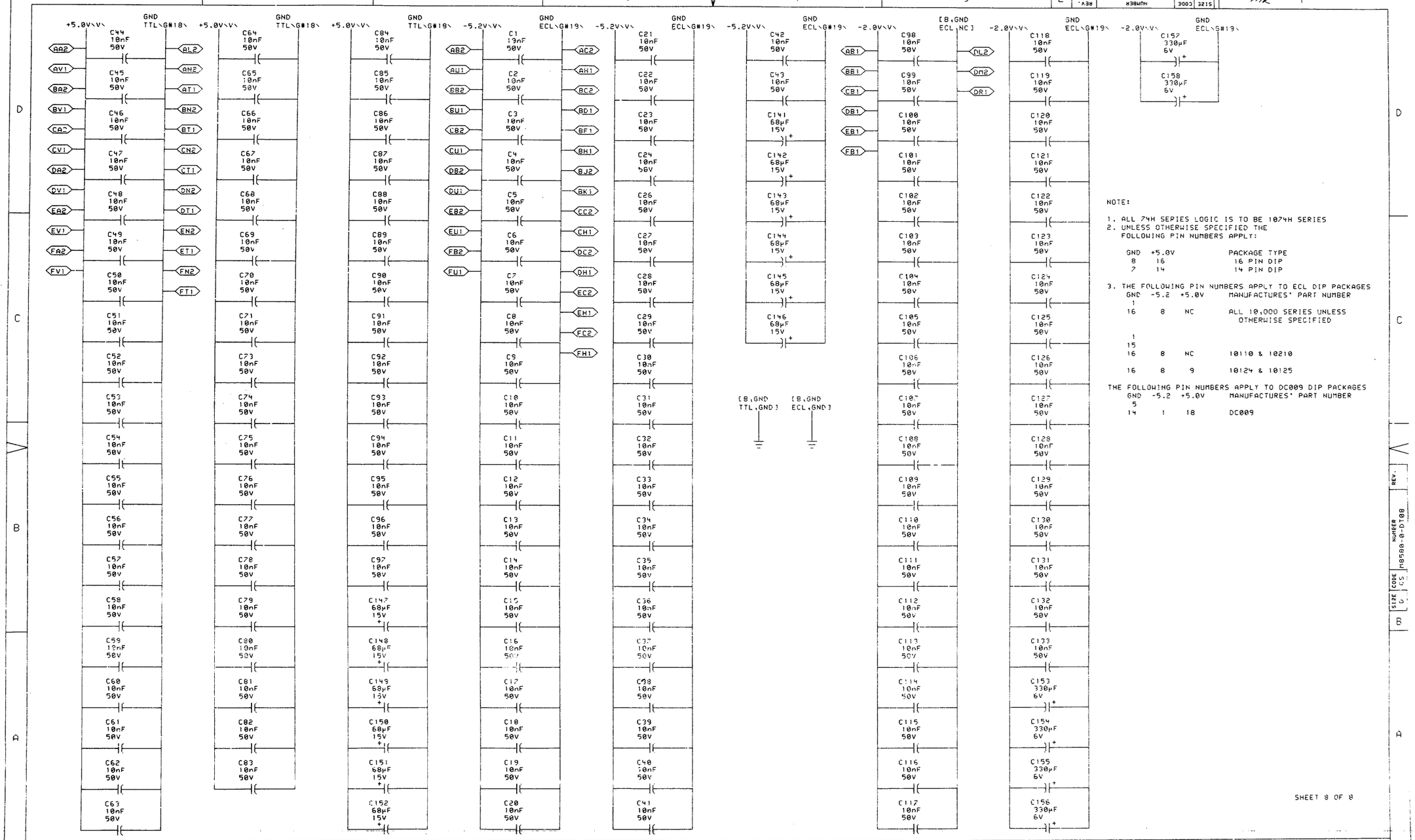

NOTE:

1. ALL 74H SERIES LOGIC IS TO BE 1074H SERIES
2. UNLESS OTHERWISE SPECIFIED THE FOLLOWING PIN NUMBERS APPLY:

GND	+5.0V	PACKAGE TYPE
8	16	16 PIN DIP
7	14	14 PIN DIP

3. THE FOLLOWING PIN NUMBERS APPLY TO ECL DIP PACKAGES

GND	-5.2	+5.0V	MANUFACTURES' PART NUMBER
1 16	8	NC	ALL 10,000 SERIES UNLESS OTHERWISE SPECIFIED
1 15 16	8	NC	10110 & 10210
16	8	9	10124 & 10125

THE FOLLOWING PIN NUMBERS APPLY TO DC009 DIP PACKAGES

GND	-5.2	+5.0V	MANUFACTURES' PART NUMBER
5 14	1	18	DC009

SHEET 8 OF 8

*THIS DRAWING AND SPECIFICATIONS, HEREIN, ARE THE PROPERTY OF DIGITAL EQUIPMENT CORPORATION AND SHALL NOT BE REPRODUCED OR COPIED OR USED IN WHOLE OR IN PART AS THE BASIS FOR THE MANUFACTURE OR SALE OF ITEMS WITHOUT WRITTEN PERMISSION. COPYRIGHT © 1978, DIGITAL EQUIPMENT CORPORATION.

REVISIONS		
CHK	CHANGE NO.	REV

digital

DRN DATE 05-JUN-78 ENG. DATE
CHK DATE BOARD LOCATION:
SHEET 1 OF 1
DT08EF.DRW[4,672] 05-JUN-78 16:53 NEXT HIGHER ASSEMBLY:
FIRST USED ON OPTION/MODEL: MF20 D-DD-M8580

TITLE: DUAL TRANSLATOR POWER, GND. CAPS.

SIZE	CODE	NUMBER	REV.
D	CS	M8580-0-DT08	

RESISTOR LOC(PIN)	SHOWN ON DRW#	REF	VALUE	TERMINATES SIGNAL
R61(1)	DT01	A6	68Ω	%E33(12)
R62(1)	DT01	A6	68Ω	%E35(14)
R109(1)	DT01	A7	68Ω	%E38(9)
R58(1)	DT06	B2	68Ω	%E40(11)
R13(1)	DT06	B2	68Ω	%E40(14)
R188(1)	DT06	D6	68Ω	%E40(3)
R228(1)	DT01	D6	68Ω	%E44(12)
R224(1)	DT01	C6	68Ω	%E44(7)
R97(1)	DT05	C7	68Ω	%E46(1)
R128(1)	DT05	A7	68Ω	%E46(14)
R94(1)	DT05	B7	68Ω	%E46(15)
R205(1)	DT05	C7	68Ω	%E46(2)
R167(1)	DT05	C2	68Ω	%E47(1)
R131(1)	DT05	A2	68Ω	%E47(14)
R130(1)	DT05	B2	68Ω	%E47(15)
R204(1)	DT05	C2	68Ω	%E47(2)
R166(1)	DT05	C5	68Ω	%E52(1)
R232(1)	DT05	A5	68Ω	%E52(14)
R93(1)	DT05	B5	68Ω	%E52(15)
R95(1)	DT05	C5	68Ω	%E52(2)
R60(1)	DT01	A8	68Ω	DATA VALID[N/18+1, A OUT, B OUT] H
R49(1)	DT02	D5	68Ω	DT02 MEM DATA IN 0[N+00] H
R51(1)	DT02	C5	68Ω	DT02 MEM DATA IN 0[N+01] H
R8(1)	DT02	B5	68Ω	DT02 MEM DATA IN 0[N+02] H
R6(1)	DT02	D2	68Ω	DT02 MEM DATA IN 0[N+03] H
R39(1)	DT02	C2	68Ω	DT02 MEM DATA IN 0[N+04] H
R41(1)	DT02	B2	68Ω	DT02 MEM DATA IN 0[N+05] H
R48(1)	DT02	C5	68Ω	DT02 MEM DATA IN 1[N+00] H
R50(1)	DT02	B5	68Ω	DT02 MEM DATA IN 1[N+01] H
R10(1)	DT02	A5	68Ω	DT02 MEM DATA IN 1[N+02] H
R7(1)	DT02	C2	68Ω	DT02 MEM DATA IN 1[N+03] H
R38(1)	DT02	B2	68Ω	DT02 MEM DATA IN 1[N+04] H
R40(1)	DT02	A2	68Ω	DT02 MEM DATA IN 1[N+05] H
R1(1)	DT03	D5	68Ω	DT03 MEM DATA IN 0[N+06] H
R3(1)	DT03	C5	68Ω	DT03 MEM DATA IN 0[N+07] H
R100(1)	DT03	B5	68Ω	DT03 MEM DATA IN 0[N+08] H
R132(1)	DT03	D2	68Ω	DT03 MEM DATA IN 0[N+09] H
R35(1)	DT03	C2	68Ω	DT03 MEM DATA IN 0[N+10] H
R37(1)	DT03	B2	68Ω	DT03 MEM DATA IN 0[N+11] H
R5(1)	DT03	D5	68Ω	DT03 MEM DATA IN 1[N+06] H

RESISTOR LOC(PIN)	SHOWN ON DRW#	REF	VALUE	TERMINATES SIGNAL
R2(1)	DT03	B5	68Ω	DT03 MEM DATA IN 1[N+07] H
R99(1)	DT03	A5	68Ω	DT03 MEM DATA IN 1[N+08] H
R101(1)	DT03	D2	68Ω	DT03 MEM DATA IN 1[N+09] H
R34(1)	DT03	B2	68Ω	DT03 MEM DATA IN 1[N+10] H
R36(1)	DT03	A2	68Ω	DT03 MEM DATA IN 1[N+11] H
R162(1)	DT04	D5	68Ω	DT04 MEM DATA IN 0[N+12] H
R164(1)	DT04	C5	68Ω	DT04 MEM DATA IN 0[N+13] H
R158(1)	DT04	B5	68Ω	DT04 MEM DATA IN 0[N+14] H
R159(1)	DT04	D2	68Ω	DT04 MEM DATA IN 0[N+15] H
R119(1)	DT04	C2	68Ω	DT04 MEM DATA IN 0[N+16] H
R121(1)	DT04	B2	68Ω	DT04 MEM DATA IN 0[N+17] H
R161(1)	DT04	D5	68Ω	DT04 MEM DATA IN 1[N+12] H
R163(1)	DT04	B5	68Ω	DT04 MEM DATA IN 1[N+13] H
R157(1)	DT04	A5	68Ω	DT04 MEM DATA IN 1[N+14] H
R160(1)	DT04	D2	68Ω	DT04 MEM DATA IN 1[N+15] H
R118(1)	DT04	B2	68Ω	DT04 MEM DATA IN 1[N+16] H
R120(1)	DT04	A2	68Ω	DT04 MEM DATA IN 1[N+17] H
R122(1)	DT06	D2	68Ω	DT06 0[N/18+1,MEM PAR IN,SPARE9] H
R123(1)	DT06	D2	68Ω	DT06 1[N/18+1,MEM PAR IN,SPARE10] H
R98(1)	DT06	A1	68Ω	DT06 DATA TO MEM DISABLE A H
R168(1)	DT06	A1	68Ω	DT06 DATA TO MEM DISABLE B H
R182(1)	DT06	A1	68Ω	DT06 DATA TO MEM DISABLE C H
R4(1)	DT06	C6	68Ω	-DT06 SEL 0 H
R12(1)	DT02	D6	68Ω	MB [N+00] H
R9(1)	DT02	C6	68Ω	MB [N+01] H
R54(1)	DT02	B6	68Ω	MB [N+02] H
R55(1)	DT02	D3	68Ω	MB [N+03] H
R180(1)	DT02	C3	68Ω	MB [N+04] H
R179(1)	DT02	B3	68Ω	MB [N+05] H
R181(1)	DT03	D6	68Ω	MB [N+06] H
R178(1)	DT03	C6	68Ω	MB [N+07] H
R134(1)	DT03	B6	68Ω	MB [N+08] H
R133(1)	DT03	D3	68Ω	MB [N+09] H
R135(1)	DT03	C3	68Ω	MB [N+10] H
R136(1)	DT03	B3	68Ω	MB [N+11] H
R57(1)	DT04	D6	68Ω	MB [N+12] H
R11(1)	DT04	C6	68Ω	MB [N+13] H
R107(1)	DT04	B6	68Ω	MB [N+14] H
R106(1)	DT04	D3	68Ω	MB [N+15] H
R53(1)	DT04	C3	68Ω	MB [N+16] H

RESISTOR LOC(PIN)	SHOWN ON DRW#	REF	VALUE	TERMINATES SIGNAL
R108(1)	DT04	B3	68Ω	MB [N+17] H
R129(1)	DT01	C3	68Ω	MEM RQ [N/18+1,0,3] H
R206(1)	DT06	C3	68Ω	MEM T[]]1
R214(1)	DT06	C3	68Ω	MEM T[]]2
R213(1)	DT06	C3	68Ω	MEM T[]]3
R126(1)	DT01	B3	68Ω	MEM [N/18+1,RQ 1,RD RQ] H
R127(1)	DT01	B3	68Ω	MEM [N/18+1,RQ 2,WR RQ] H
R56(1)	DT01	D3	68Ω	MEM [N/18+1,START A,START B] H
R195(1)	DT05	D3	68Ω	MEM [P/12+1,SPARE 33,SPARE32] H
R230(1)	DT05	D7	68Ω	PMA [P+14] H
R231(1)	DT05	D7	68Ω	PMA [P+15] H
R191(1)	DT05	D7	68Ω	PMA [P+16] H
R229(1)	DT05	D7	68Ω	PMA [P+17] H
R82(1)	DT05	D5	68Ω	PMA [P+18] H
R81(1)	DT05	D5	68Ω	PMA [P+19] H
R83(1)	DT05	D5	68Ω	PMA [P+20] H
R84(1)	DT05	D5	68Ω	PMA [P+21] H
R189(1)	DT01	B7	68Ω	[N/18+1,CLK SBUS,SPARE] CLK H
R59(1)	DT06	D3	68Ω	[N/18+1,MB PAR,SPARE7] H
R207(1)	DT06	C2	68Ω	[N/18+1,MB23 SEQ RQ,MEM DATA TO MEM] H
R96(1)	DT01	A3	68Ω	-[N/18+1,MEM DIAG,-MEM ADR PAR] H
R225(1)	DT06	D6	68Ω	[N/18+1,MEM SPARE,DIAG MEM RESET] H
R226(1)	DT05	C7	68Ω	[N/18+1,SBUS ADR HOLD H,MEM TERM 18]
R192(1)	DT05	D3	68Ω	[P/12+1,PMA 22,SBUS ADR 34] H
R193(1)	DT05	D3	68Ω	[P/12+1,PMA 23,SBUS ADR 35] H
R194(1)	DT05	D3	68Ω	[P/12+1,PMA 24,PMA 25] H

NOTE:

1. ALL TERMINATORS HAVE PIN TWO CONNECTED TO -2.0V AND ARE 5% 1/4WATT UNLESS OTHERWISE SPECIFIED
2. ENTRIES ARE SORTED BY SIGNAL NAME
3. % INDICATES OUTPUT OF DIP LOC AND () INDICATES PIN NUMBER

"THIS DRAWING AND SPECIFICATIONS, HEREIN, ARE THE PROPERTY OF DIGITAL EQUIPMENT CORPORATION AND SHALL NOT BE REPRODUCED OR COPIED OR USED IN WHOLE OR IN PART AS THE BASIS FOR THE MANUFACTURE OR SALE OF ITEMS WITHOUT WRITTEN PERMISSION. COPYRIGHT © 1978, DIGITAL EQUIPMENT CORPORATION"

REVISIONS		
CHK	CHANGE NO.	REV

digital

DRN. E Smith DATE 09-JUN-78 ENG. [illegible] DATE 29 Jun 78
CHK [illegible] DATE 18 Jul 78 BOARD LOCATION: SHEET 1 OF 1
F85801.DRW[4,672] 09-JUN-78 09:11 NEXT HIGHER ASSEMBLY: D-DD-M8580-0
FIRST USED ON OPTION/MODEL: MF20

TITLE: DUAL TRANSLATOR TERMINATORS

SIZE	CODE	NUMBER	REV.
D	CS	M8580-0-RES	

MR 1

119

DRAWING NUMBER	PAGE	PART NO.	DESCRIPTION	REVISIONS
			FILE: ORIGINAL LAYOUT	
			ECO NUMBER	
			MODULE REVISION	A
D-UA-M8581-0-0	5		XBUS TRANSLATOR	A
K-PL-M8581-0-DBP	2		XBUS TRANSLATOR	A
D-CS-M8581-0-DX01	1		XBUS TRANSLATOR	-
D-CS-M8581-0-DX02	1		DATA TRNCVR 0-5	-
D-CS-M8581-0-DX03	1		DATA TRNCVR 6-11	-
D-CS-M8581-0-DX04	1		DATA TRNCVR 12-17	-
D-CS-M8581-0-DX05	1		ADDRESS DRIVERS	-
D-CS-M8581-0-DX06	1		CTRL & REF VOLT	-
D-CS-M8581-0-DX07	1		POWER. GND. CAPS.	-
D-CS-M8581-0-RES	1		TERMINATORS	-
D-MD-5013219-0-0	5		DRILL & ETCH DRAWING	A
		5013219	ETCH CIRCUIT BOARD	B
K-PC-M8581-0-DBC	-		P.C. DESIGN DATA BASE	A
POO-M8581-00	-		PROCESS SHEET (REF ONLY)	-

NOTES:

"THIS DRAWING AND SPECIFICATIONS, HEREIN, ARE THE PROPERTY OF DIGITAL EQUIPMENT CORPORATION AND SHALL NOT BE REPRODUCED OR COPIED OR USED IN WHOLE OR IN PART AS THE BASIS FOR THE MANUFACTURE OR SALE OF ITEMS WITHOUT WRITTEN PERMISSION. COPYRIGHT © 1978, DIGITAL EQUIPMENT CORPORATION"

REVISIONS		
CHK	CHANGE NO.	REV

DRN P. Lucier DATE 16-AUG-78
CHK'D M. Morand DATE Aug 17 78
ENG P. Clarence DATE Aug 17 78
PROD. B.J. Chagnon Aug 17, 78
DSK:M8581DD.T2P[4,673] 16-AUG-78 13:58
BOARD LOCATION: N/A
SHEET 1 OF 1
FIRST USED ON OPTION/MODEL: MF20
NEXT HIGHER ASSEMBLY: NONE

TITLE: XBUS TRANSLATOR

SIZE	CODE	NUMBER	REV.
D	DD	M8581-0	

ME

THIS DRAWING AND SPECIFICATIONS, HEREIN, ARE THE PROPERTY OF DIGITAL EQUIPMENT CORPORATION AND SHALL NOT BE REPRODUCED OR COPIED OR USED IN WHOLE OR IN PART AS THE BASIS FOR THE MANUFACTURING OR SALE OF ITEMS WITHOUT WRITTEN PERMISSION.
COPYRIGHT © 1977 DIGITAL EQUIPMENT CORPORATION

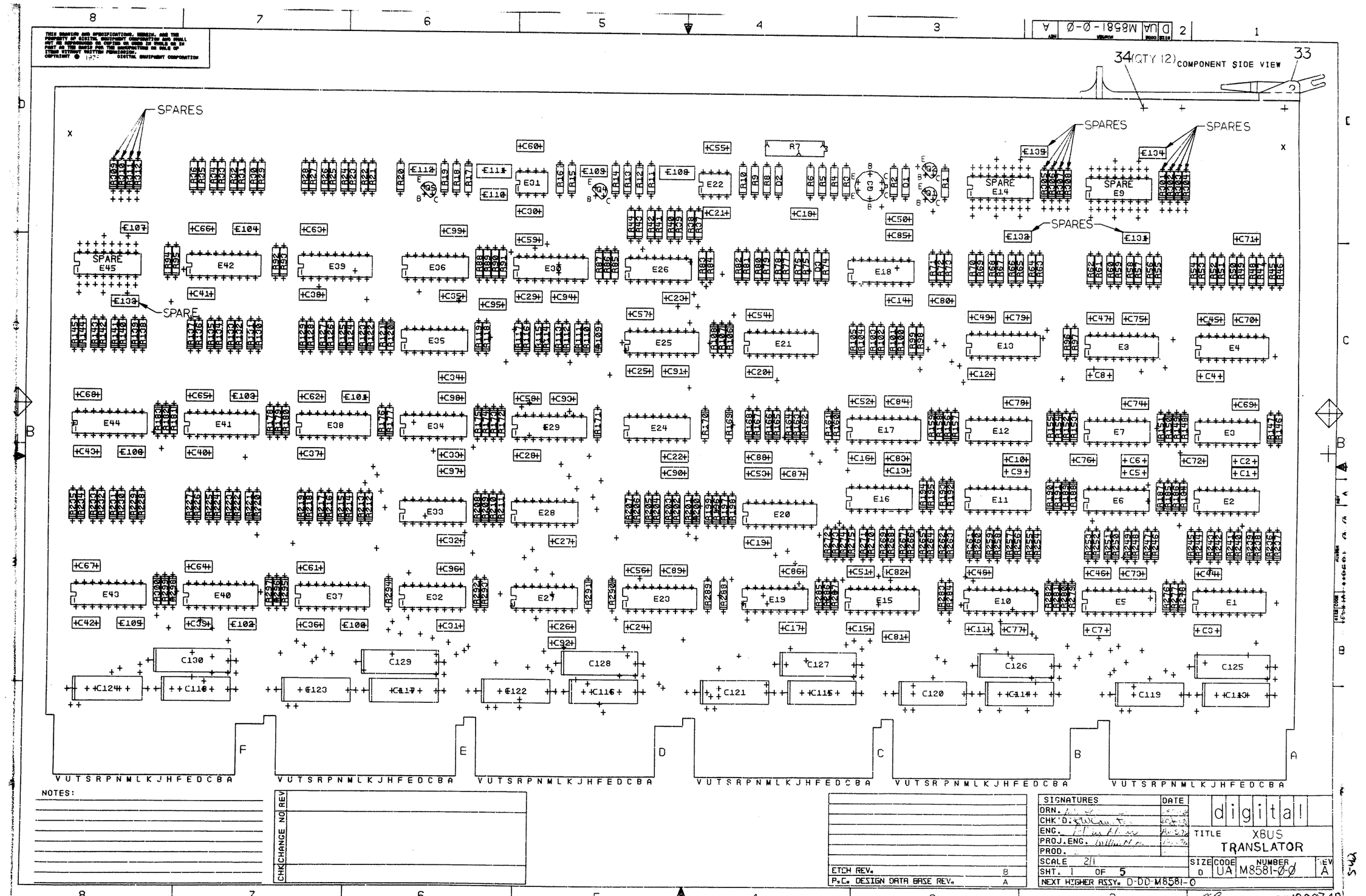

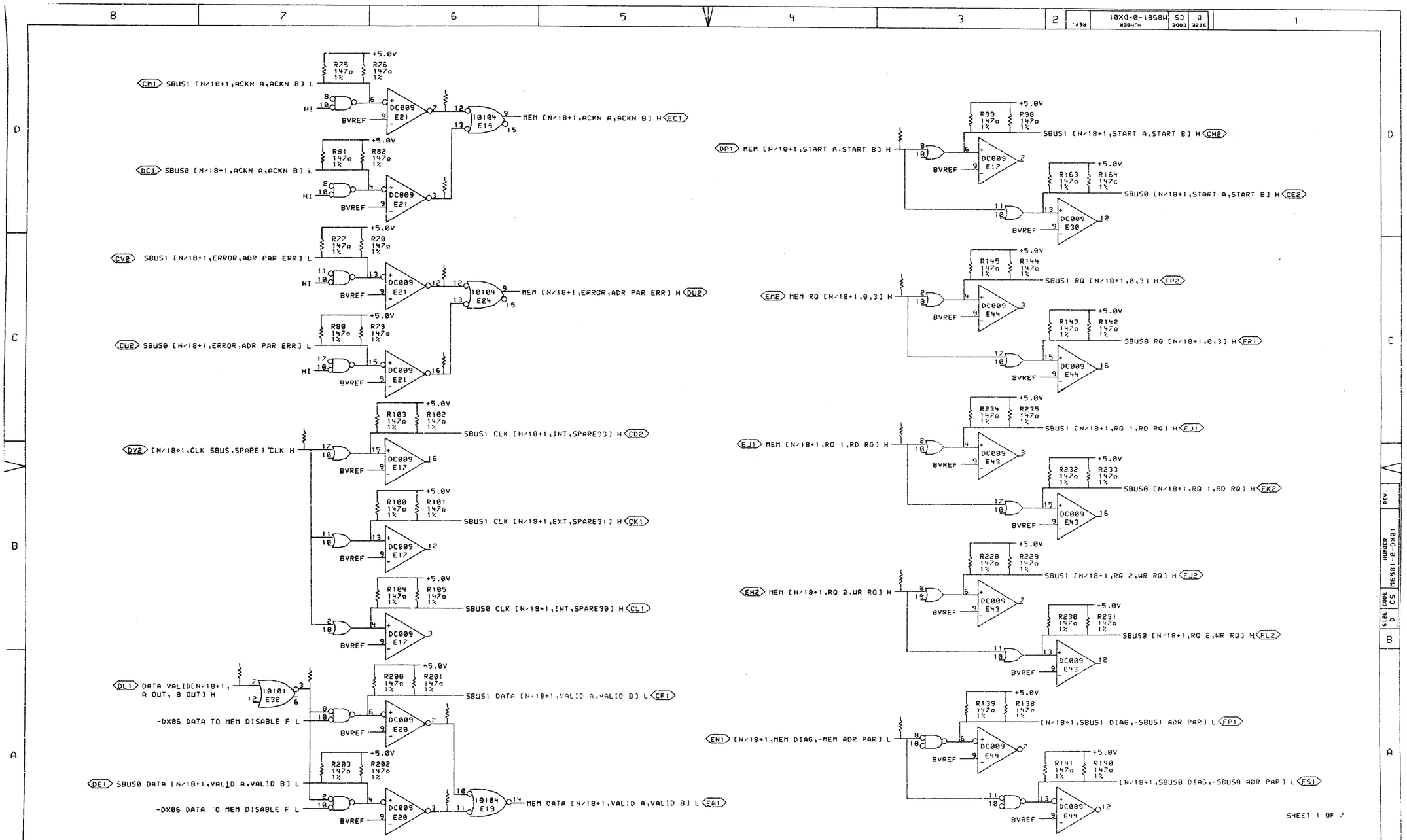

"THIS DRAWING AND SPECIFICATIONS, HEREIN, ARE THE PROPERTY OF DIGITAL EQUIPMENT CORPORATION AND SHALL NOT BE REPRODUCED OR COPIED OR USED IN WHOLE OR IN PART AS THE BASIS FOR THE MANUFACTURE OR SALE OF ITEMS WITHOUT WRITTEN PERMISSION. COPYRIGHT © 1978, DIGITAL EQUIPMENT CORPORATION"

REVISIONS		
CHK	CHANGE NO.	REV

digital

DRN: DATE 26-JUL-78 ENG: DATE
CHK: DATE BOARD LOCATION:
SHEET 1 OF 1
PUB:<M8581-MOS>DX01B.DRW 26-JUL-78 08:41 NEXT HIGHER ASSEMBLY:
FIRST USED ON OPTION/MODEL: MF20 D-DD-M8581-0

TITLE: XBUS TRANSLATOR

SIZE	CODE	NUMBER	REV.
D	CS	M8581-0-DX01	

543

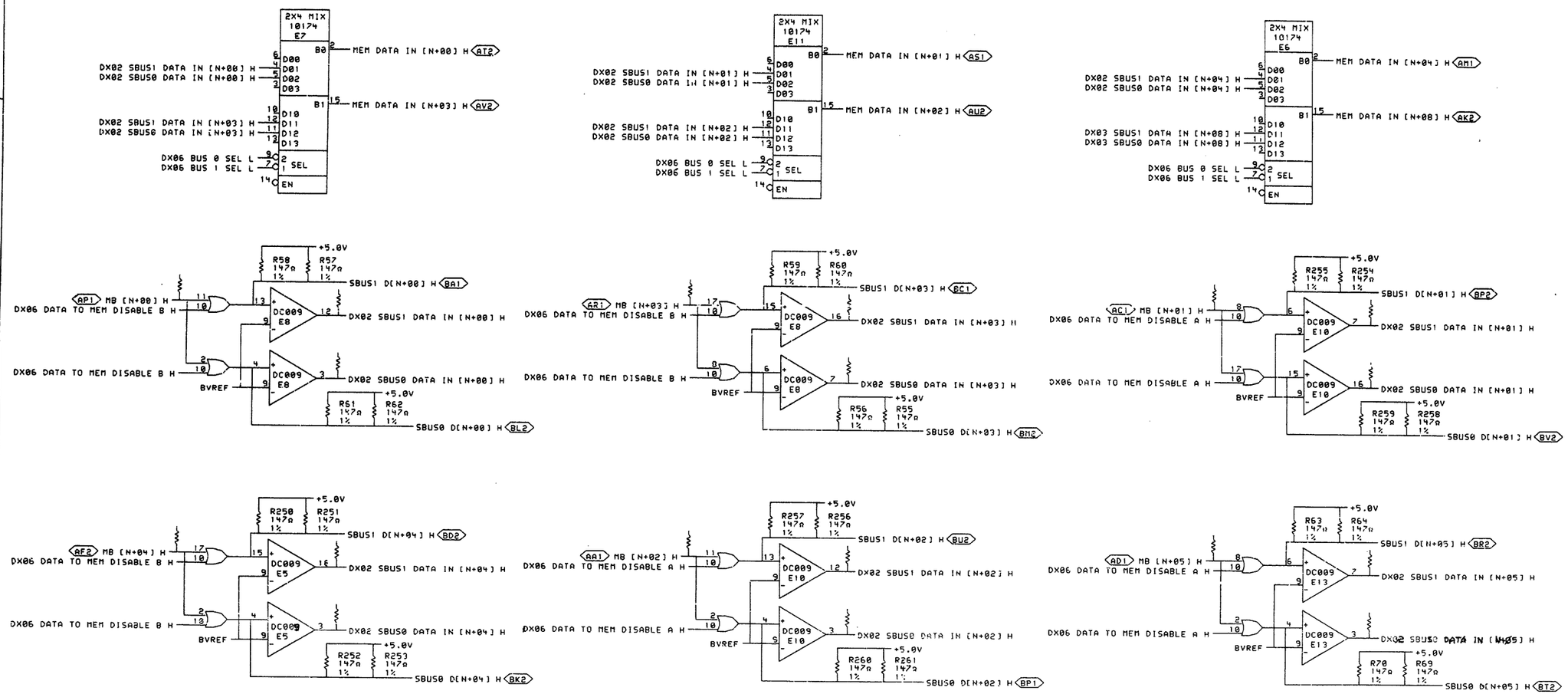

SHEET 2 OF 7

"THIS DRAWING AND SPECIFICATIONS, HEREIN, ARE THE PROPERTY OF DIGITAL EQUIPMENT CORPORATION AND SHALL NOT BE REPRODUCED OR COPIED OR USED IN WHOLE OR IN PART AS THE BASIS FOR THE MANUFACTURE OR SALE OF ITEMS WITHOUT WRITTEN PERMISSION. COPYRIGHT © 1978, DIGITAL EQUIPMENT CORPORATION

REVISIONS		
CHK	CHANGE NO.	REV

digital

DRN P. Lucier DATE 26-JUL-78
CHK'D DATE
ENG. DATE
BOARD LOCATION:
SHEET 1 OF 1
PUB:<M8581-MOS>DX02.DRW 26-JUL-78 08:06
NEXT HIGHER ASSEMBLY: D-DD-M8581-0
FIRST USED ON OPTION/MODEL: MF20

TITLE: XBUS TRANSLATOR DATA TRNCVR 0-5

SIZE	CODE	NUMBER	REV.
D	CS	M8581-0-DX02	

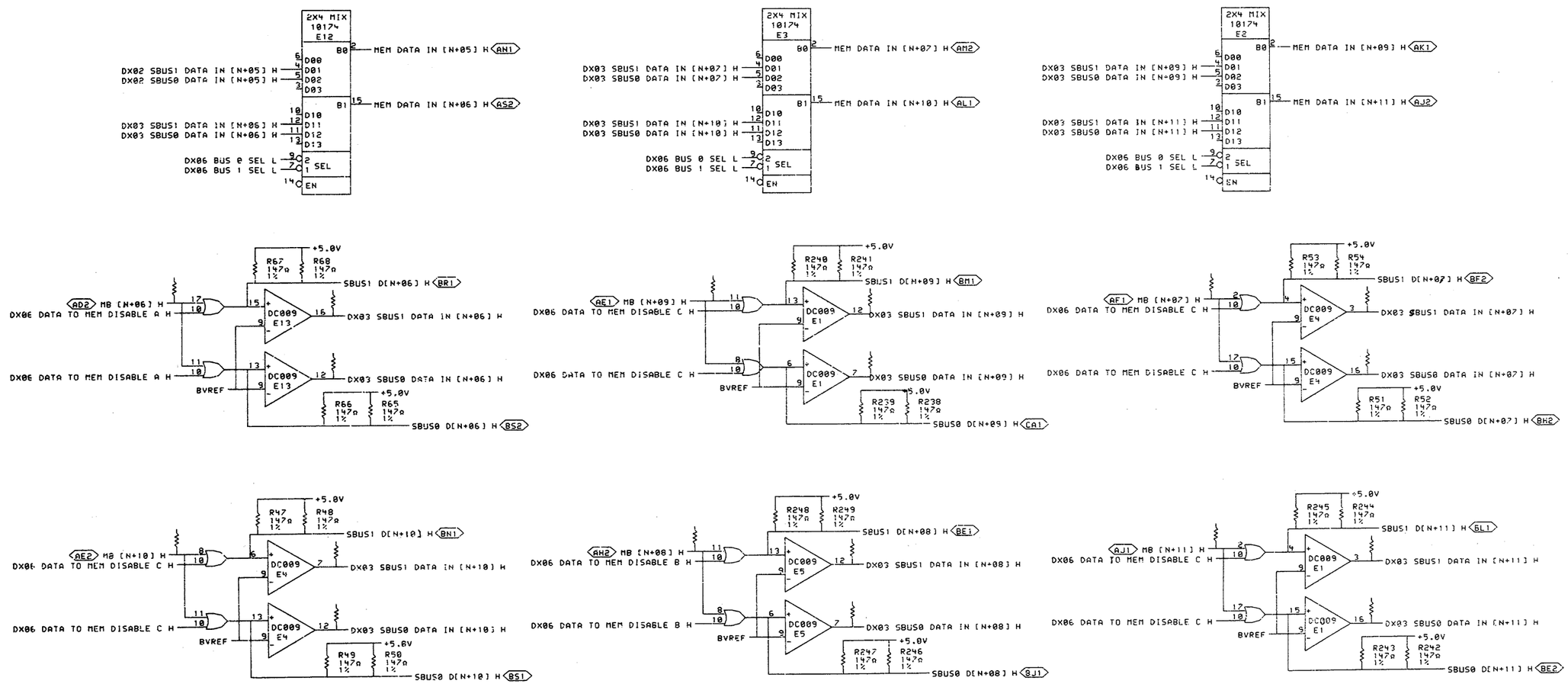

SHEET 3 OF 7

THIS DRAWING AND SPECIFICATIONS, HEREIN, ARE THE PROPERTY OF DIGITAL EQUIPMENT CORPORATION AND SHALL NOT BE REPRODUCED OR COPIED OR USED IN WHOLE OR IN PART AS THE BASIS FOR THE MANUFACTURE OR SALE OF ITEMS WITHOUT WRITTEN PERMISSION. COPYRIGHT © 1978, DIGITAL EQUIPMENT CORPORATION.

REVISIONS		
CHK	CHANGE NO.	REV

digital

DRN: DATE 26-JUL-78
CHK'D: DATE
ENG: DATE
BOARD LOCATION:
SHEET 1 OF 1
NEXT HIGHER ASSEMBLY: D-DD-M8581-0
PUB:(M8581-M05)DX03B.DRW 26-JUL-78 08:13
FIRST USED ON OPTION-MODEL: MF20

TITLE: XBUS TRANSLATOR DATA TRNCVR 6-11

SIZE	CODE	NUMBER	REV.
D	CS	M8581-0-DX03	

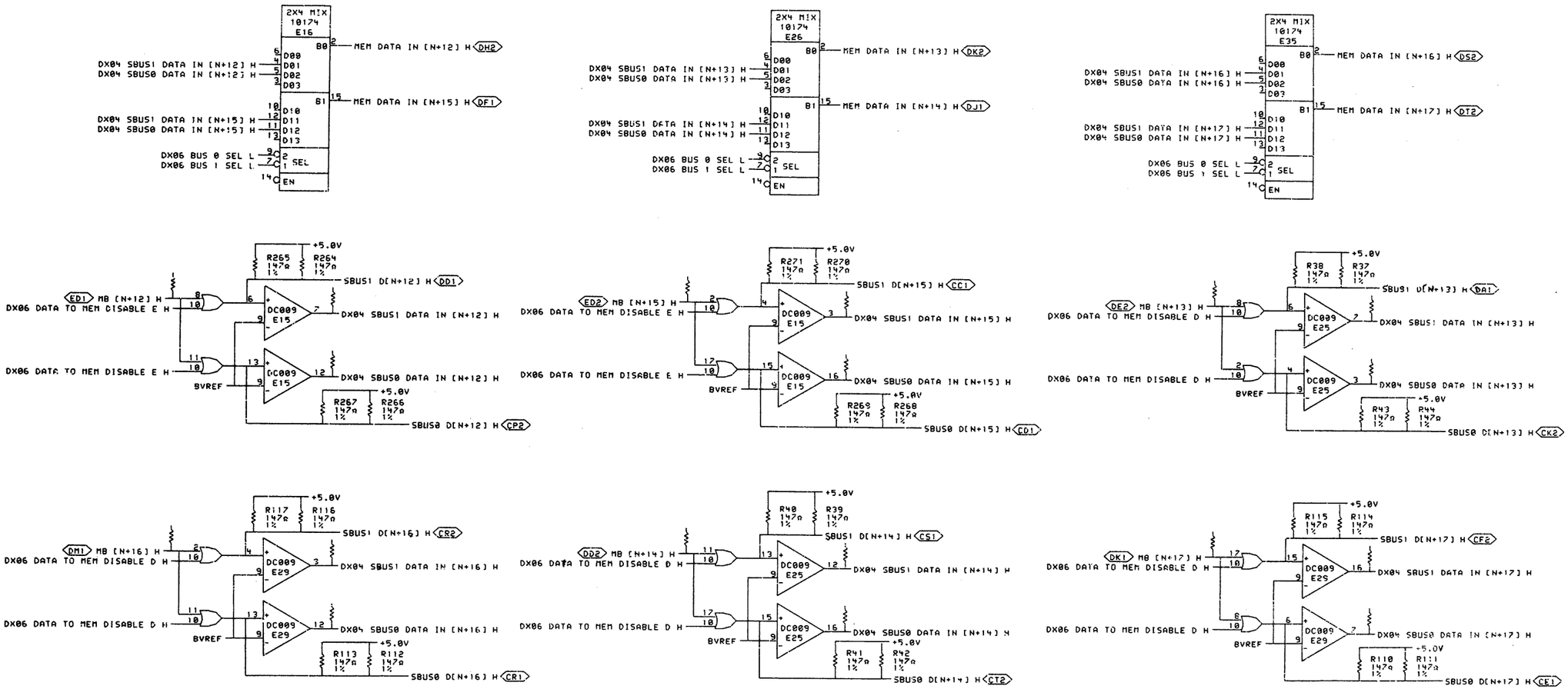

SHEET 4 OF 7

"THIS DRAWING AND SPECIFICATIONS, HEREIN, ARE THE PROPERTY OF DIGITAL EQUIPMENT CORPORATION AND SHALL NOT BE REPRODUCED OR COPIED OR USED IN WHOLE OR IN PART AS THE BASIS FOR THE MANUFACTURE OR SALE OF ITEMS WITHOUT WRITTEN PERMISSION. COPYRIGHT © 1978, DIGITAL EQUIPMENT CORPORATION"

REVISIONS		
CHK	CHANGE NO.	REV

digital

DRN P. Lucier DATE 26-JUL-78 ENG DATE
CHK DATE BOARD LOCATION:
SHEET 1 OF 1
PUB:(M8581-MOS)DX04B.DRW 26-JUL-78 08:16 NEXT HIGHER ASSEMBLY:
FIRST USED ON OPTION/MODEL: MF20 D-DD-M8581-0

TITLE: XBUS TRANSLATOR DATA TRNCVR 12-17

SIZE	CODE	NUMBER	REV.
D	CS	M8581-0-DX04	

125

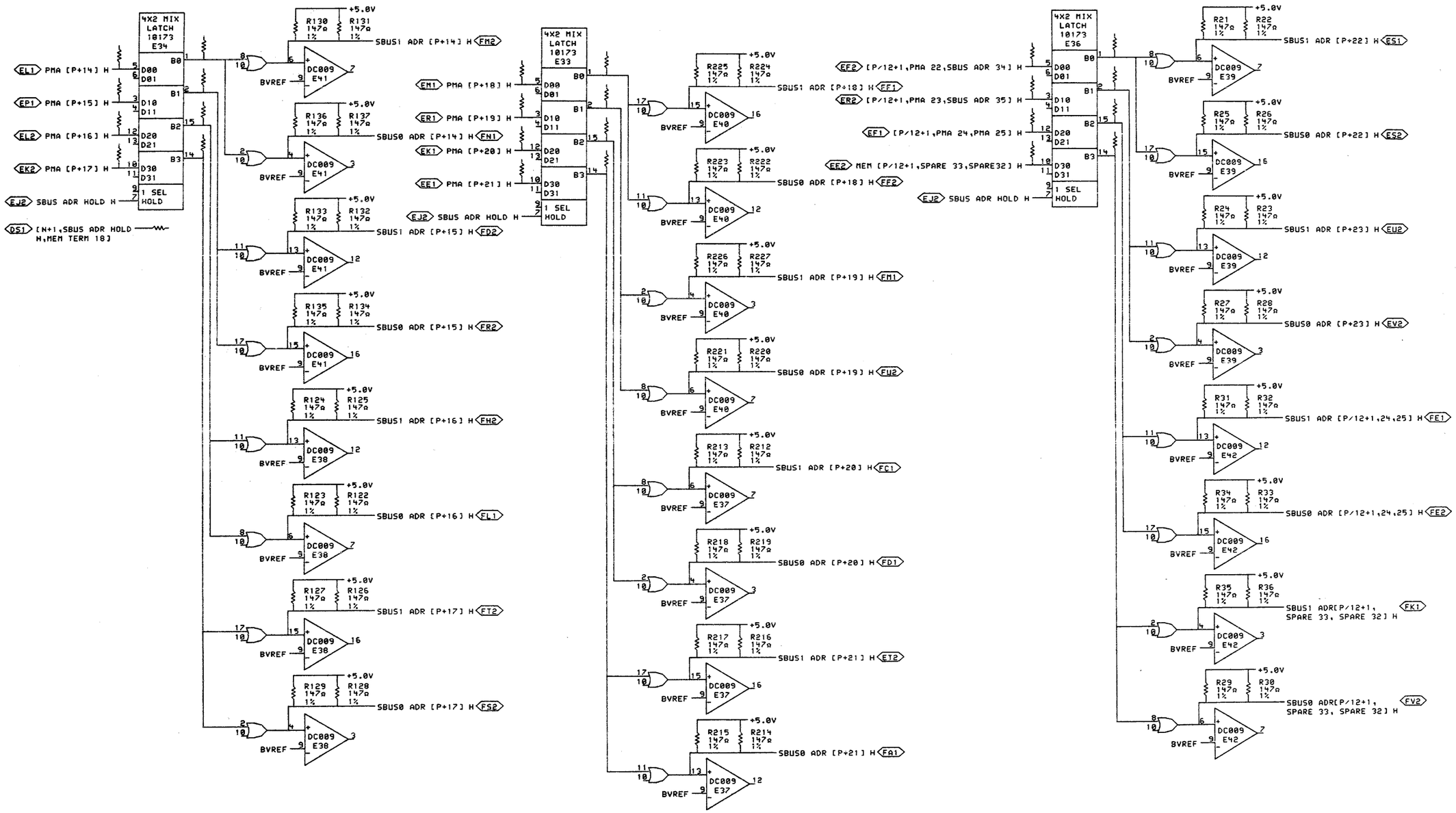

"THIS DRAWING AND SPECIFICATIONS, HEREIN, ARE THE PROPERTY OF DIGITAL EQUIPMENT CORPORATION AND SHALL NOT BE REPRODUCED OR COPIED OR USED IN WHOLE OR IN PART AS THE BASIS FOR THE MANUFACTURE OR SALE OF ITEMS WITHOUT WRITTEN PERMISSION. COPYRIGHT © 1970, DIGITAL EQUIPMENT CORPORATION"

REVISIONS		
CHK	CHANGE NO.	REV

DRN P. Lucier DATE 26-JUL-78 ENG. DATE
CHK'D DATE BOARD LOCATION:
SHEET 1 OF 1
PUB:<M8581-MOS>DX05B.DRW 26-JUL-78 08:21 NEXT HIGHER ASSEMBLY: D-DD-M8581-0
FIRST USED ON OPTION/MODEL: MF20

TITLE: XBUS TRANSLATOR ADDRESS DRIVERS

SIZE	CODE	NUMBER	REV.
D	CS	M8581-0-DX05	

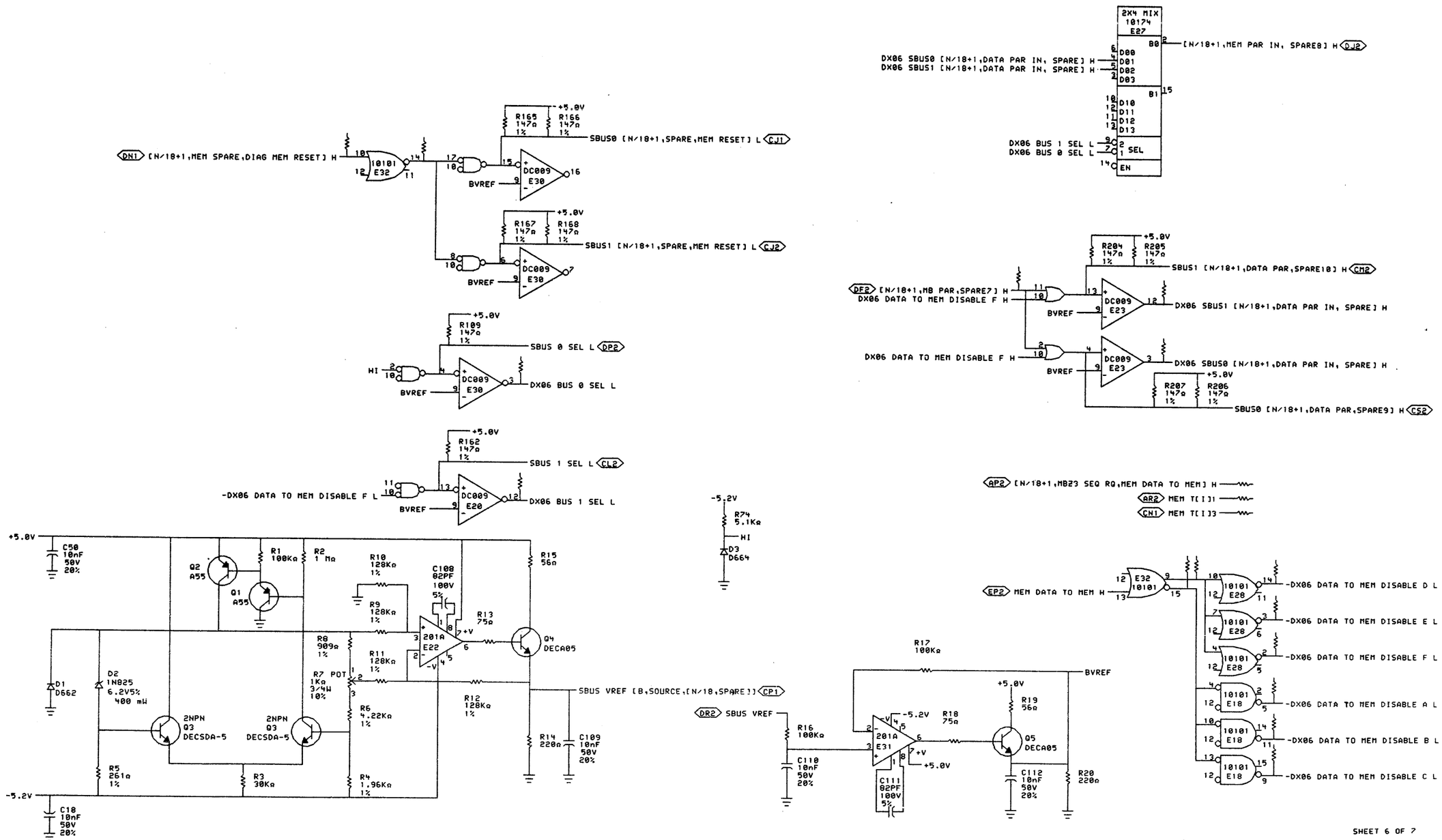

"THIS DRAWING AND SPECIFICATIONS, HEREIN, ARE THE PROPERTY OF DIGITAL EQUIPMENT CORPORATION AND SHALL NOT BE REPRODUCED OR COPIED OR USED IN WHOLE OR IN PART AS THE BASIS FOR THE MANUFACTURE OR SALE OF ITEMS WITHOUT WRITTEN PERMISSION. COPYRIGHT © 1978, DIGITAL EQUIPMENT CORPORATION"

REVISIONS		
CHK	CHANGE NO.	REV

digital

DRN [illegible] DATE 17-AUG-78 | CHK D. Moncel DATE [illegible] | ENG [illegible] DATE Sept 7 78 | DATE [illegible]

PUB:<M8581-MOS>DX06B.DRW 17-AUG-78 09:16 | BOARD LOCATION: | SHEET 1 OF 1

FIRST USED ON OPTION/MODEL: MF20 | NEXT HIGHER ASSEMBLY: D-DD-M8581-0

TITLE: XBUS TRANSLATOR CTRL & REF VOLT

SIZE	CODE	NUMBER	REV.
D	CS	M8581-0-DX06	

mR 1 127

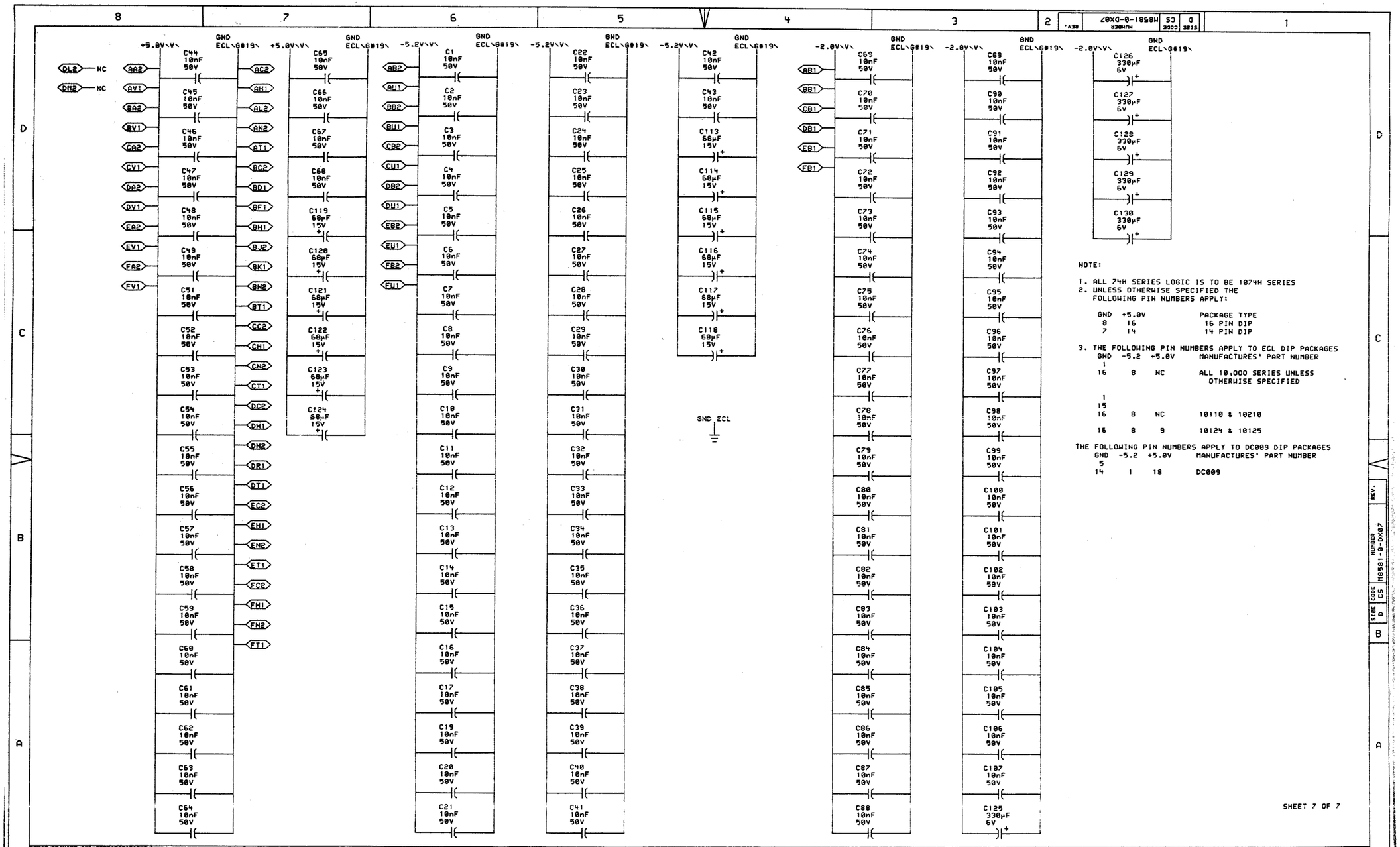

NOTE:

1. ALL 74H SERIES LOGIC IS TO BE 1074H SERIES
2. UNLESS OTHERWISE SPECIFIED THE FOLLOWING PIN NUMBERS APPLY:

GND	+5.0V	PACKAGE TYPE
8	16	16 PIN DIP
7	14	14 PIN DIP

3. THE FOLLOWING PIN NUMBERS APPLY TO ECL DIP PACKAGES

GND	-5.2	+5.0V	MANUFACTURES' PART NUMBER
1 16	8	NC	ALL 10,000 SERIES UNLESS OTHERWISE SPECIFIED
1 15 16	8	NC	10110 & 10210
16	8	9	10124 & 10125

THE FOLLOWING PIN NUMBERS APPLY TO DC009 DIP PACKAGES

GND	-5.2	+5.0V	MANUFACTURES' PART NUMBER
5 14	1	18	DC009

SHEET 7 OF 7

"THIS DRAWING AND SPECIFICATIONS, HEREIN, ARE THE PROPERTY OF DIGITAL EQUIPMENT CORPORATION AND SHALL NOT BE REPRODUCED OR COPIED OR USED IN WHOLE OR IN PART AS THE BASIS FOR THE MANUFACTURE OR SALE OF ITEMS WITHOUT WRITTEN PERMISSION. COPYRIGHT © 1978, DIGITAL EQUIPMENT CORPORATION"

REVISIONS		
CHK	CHANGE NO.	REV

digital

DRN P. Lucier DATE 17-AUG-78 ENG DATE
CHK'D DATE BOARD LOCATION:
SHEET 1 OF 1
PUB:<M8581-MOS>DX078.DRW 17-AUG-78 08:43 NEXT HIGHER ASSEMBLY: D-DD-M8581-0
FIRST USED ON OPTION/MODEL: MF20

TITLE: XBUS TRANSLATOR POWER. GND. CAPS.

SIZE	CODE	NUMBER	REV.
D	CS	M8581-0-DX07	

123 mR

RESISTOR LOC(PIN)	SHOWN ON DRW#	REF	VALUE	TERMINATES SIGNAL
R273(1)	DX01	A6	68Ω	%E20(3)
R274(1)	DX01	A6	68Ω	%E20(7)
R170(1)	DX01	C6	68Ω	%E21(12)
R169(1)	DX01	C6	68Ω	%E21(16)
R198(1)	DX01	D6	68Ω	%E21(3)
R272(1)	DX01	D6	68Ω	%E21(7)
R87(1)	DX06	D6	68Ω	%E32(14)
R71(1)	DX06	B2	68Ω	%E32(15)
R197(1)	DX01	A7	68Ω	%E32(3)
R171(1)	DX06	B2	68Ω	%E32(9)
R297(1)	DX05	D5	68Ω	%E33(1)
R295(1)	DX05	D5	68Ω	%E33(14)
R296(1)	DX05	D5	68Ω	%E33(15)
R298(1)	DX05	D5	68Ω	%E33(2)
R178(1)	DX05	D7	68Ω	%E34(1)
R180(1)	DX05	D7	68Ω	%E34(14)
R179(1)	DX05	D7	68Ω	%E34(15)
R181(1)	DX05	D7	68Ω	%E34(2)
R92(1)	DX05	D2	68Ω	%E36(1)
R95(1)	DX05	D2	68Ω	%E36(14)
R94(1)	DX05	D2	68Ω	%E36(15)
R93(1)	DX05	D2	68Ω	%E36(2)
R292(1)	DX01	A7	68Ω	DATA VALID[N/18+1, A OUT, B OUT] H
R152(1)	DX02	B7	68Ω	DX02 SBUS0 DATA IN [N+00] H
R194(1)	DX02	B2	68Ω	DX02 SBUS0 DATA IN [N+01] H
R192(1)	DX02	A4	68Ω	DX02 SBUS0 DATA IN [N+02] H
R154(1)	DX02	B4	68Ω	DX02 SBUS0 DATA IN [N+03] H
R190(1)	DX02	A7	68Ω	DX02 SBUS0 DATA IN [N+04] H
R156(1)	DX02	A2	68Ω	DX02 SBUS0 DATA IN [N+05] H
R153(1)	DX02	C7	68Ω	DX02 SBUS1 DATA IN [N+00] H
R195(1)	DX02	C2	68Ω	DX02 SBUS1 DATA IN [N+01] H
R193(1)	DX02	B4	68Ω	DX02 SBUS1 DATA IN [N+02] H
R155(1)	DX02	C4	68Ω	DX02 SBUS1 DATA IN [N+03] H
R191(1)	DX02	B7	68Ω	DX02 SBUS1 DATA IN [N+04] H
R157(1)	DX02	B2	68Ω	DX02 SBUS1 DATA IN [N+05] H
R158(1)	DX03	B7	68Ω	DX03 SBUS0 DATA IN [N+06] H
R146(1)	DX03	B2	68Ω	DX03 SBUS0 DATA IN [N+07] H
R189(1)	DX03	A4	68Ω	DX03 SBUS0 DATA IN [N+08] H
R185(1)	DX03	B4	68Ω	DX03 SBUS0 DATA IN [N+09] H
R148(1)	DX03	A7	68Ω	DX03 SBUS0 DATA IN [N+10] H

RESISTOR LOC(PIN)	SHOWN ON DRW#	REF	VALUE	TERMINATES SIGNAL
R187(1)	DX03	A2	68Ω	DX03 SBUS0 DATA IN [N+11] H
R159(1)	DX03	C7	68Ω	DX03 SBUS1 DATA IN [N+06] H
R147(1)	DX03	C2	68Ω	DX03 SBUS1 DATA IN [N+07] H
R188(1)	DX03	B4	68Ω	DX03 SBUS1 DATA IN [N+08] H
R186(1)	DX03	C4	68Ω	DX03 SBUS1 DATA IN [N+09] H
R149(1)	DX03	B7	68Ω	DX03 SBUS1 DATA IN [N+10] H
R184(1)	DX03	B2	68Ω	DX03 SBUS1 DATA IN [N+11] H
R286(1)	DX04	B7	68Ω	DX04 SBUS0 DATA IN [N+12] H
R84(1)	DX04	B2	68Ω	DX04 SBUS0 DATA IN [N+13] H
R85(1)	DX04	A4	68Ω	DX04 SBUS0 DATA IN [N+14] H
R287(1)	DX04	B4	68Ω	DX04 SBUS0 DATA IN [N+15] H
R119(1)	DX04	A7	68Ω	DX04 SBUS0 DATA IN [N+16] H
R121(1)	DX04	A2	68Ω	DX04 SBUS0 DATA IN [N+17] H
R285(1)	DX04	C7	68Ω	DX04 SBUS1 DATA IN [N+12] H
R83(1)	DX04	C2	68Ω	DX04 SBUS1 DATA IN [N+13] H
R86(1)	DX04	B4	68Ω	DX04 SBUS1 DATA IN [N+14] H
R288(1)	DX04	C4	68Ω	DX04 SBUS1 DATA IN [N+15] H
R118(1)	DX04	B7	68Ω	DX04 SBUS1 DATA IN [N+16] H
R120(1)	DX04	B2	68Ω	DX04 SBUS1 DATA IN [N+17] H
R150(1)	DX06	C6	68Ω	-DX06 BUS 0 SEL H
R151(1)	DX06	B6	68Ω	-DX06 BUS 1 SEL H
R282(1)	DX06	A1	68Ω	DX06 DATA TO MEM DISABLE A H
R279(1)	DX06	A1	68Ω	DX06 DATA TO MEM DISABLE B H
R237(1)	DX06	A1	68Ω	DX06 DATA TO MEM DISABLE C H
R106(1)	DX06	B1	68Ω	DX06 DATA TO MEM DISABLE D H
R262(1)	DX06	B1	68Ω	DX06 DATA TO MEM DISABLE E H
R196(1)	DX06	A1	68Ω	DX06 DATA TO MEM DISABLE F H
R290(1)	DX06	C2	68Ω	DX06 SBUS0 [N/18+1,DATA PAR IN, SPARE] H
R291(1)	DX06	C2	68Ω	DX06 SBUS1 [N/18+1,DATA PAR IN, SPARE] H
R97(1)	DX02	C7	68Ω	MB [N+00] H
R263(1)	DX02	C3	68Ω	MB [N+01] H
R284(1)	DX02	B5	68Ω	MB [N+02] H
R96(1)	DX02	C5	68Ω	MB [N+03] H
R281(1)	DX02	B7	68Ω	MB [N+04] H
R72(1)	DX02	B3	68Ω	MB [N+05] H
R73(1)	DX03	C7	68Ω	MB [N+06] H
R45(1)	DX03	C3	68Ω	MB [N+07] H
R280(1)	DX03	B5	68Ω	MB [N+08] H
R236(1)	DX03	C5	68Ω	MB [N+09] H
R46(1)	DX03	B7	68Ω	MB [N+10] H

RESISTOR LOC(PIN)	SHOWN ON DRW#	REF	VALUE	TERMINATES SIGNAL
R270(1)	DX03	B3	68Ω	MB [N+11] H
R283(1)	DX04	C7	68Ω	MB [N+12] H
R108(1)	DX04	C3	68Ω	MB [N+13] H
R107(1)	DX04	B5	68Ω	MB [N+14] H
R275(1)	DX04	C5	68Ω	MB [N+15] H
R172(1)	DX04	B7	68Ω	MB [N+16] H
R173(1)	DX04	B3	68Ω	MB [N+17] H
R183(1)	DX01	C3	68Ω	MEM RQ [N/18+1,0,3] H
R276(1)	DX06	B2	68Ω	MEM T[ ]1
R289(1)	DX06	B2	68Ω	MEM T[ ]3
R300(1)	DX01	C3	68Ω	MEM [N/18+1,RQ 1,RD RQ] H
R299(1)	DX01	B3	68Ω	MEM [N/18+1,RQ 2,WR RQ] H
R161(1)	DX01	D3	68Ω	MEM [N/18+1,START A,START B] H
R91(1)	DX05	D3	68Ω	MEM [P/12+1,SPARE 33,SPARE32] H
R176(1)	DX05	D8	68Ω	PMA [P+14] H
R177(1)	DX05	D8	68Ω	PMA [P+15] H
R175(1)	DX05	D8	68Ω	PMA [P+16] H
R174(1)	DX05	D8	68Ω	PMA [P+17] H
R209(1)	DX05	D6	68Ω	PMA [P+18] H
R208(1)	DX05	D6	68Ω	PMA [P+19] H
R211(1)	DX05	D6	68Ω	PMA [P+20] H
R210(1)	DX05	C6	68Ω	PMA [P+21] H
R293(1)	DX05	C8	68Ω	[N+1,SBUS ADR HOLD H,MEM TERM 18]
R160(1)	DX01	B7	68Ω	[N/18+1,CLK SBUS,SPARE] CLK H
R199(1)	DX06	C3	68Ω	[N/18+1,MB PAR,SPARE7] H
R277(1)	DX06	B2	68Ω	[N/18+1,MB23 SEQ RQ,MEM DATA TO MEM] H
R182(1)	DX01	A3	68Ω	-[N/18+1,MEM DIAG,-MEM ADR PAR] H
R294(1)	DX06	D7	68Ω	[N/18+1,MEM SPARE,DIAG MEM RESET] H
R88(1)	DX05	D3	68Ω	[P/12+1,PMA 22,SBUS ADR 34] H
R89(1)	DX05	D3	68Ω	[P/12+1,PMA 23,SBUS ADR 35] H
R90(1)	DX05	D3	68Ω	[P/12+1,PMA 24,PMA 25] H

NOTE:

1. ALL TERMINATORS HAVE PIN TWO CONNECTED TO -2.0V AND ARE 5% 1/4WATT UNLESS OTHERWISE SPECIFIED
2. ENTRIES ARE SORTED BY SIGNAL NAME
3. % INDICATES OUTPUT OF DIP LOC AND
   () INDICATES PIN NUMBER

"THIS DRAWING AND SPECIFICATIONS, HEREIN, ARE THE PROPERTY OF DIGITAL EQUIPMENT CORPORATION AND SHALL NOT BE REPRODUCED OR COPIED OR USED IN WHOLE OR IN PART AS THE BASIS FOR THE MANUFACTURE OR SALE OF ITEMS WITHOUT WRITTEN PERMISSION. COPYRIGHT © 1978, DIGITAL EQUIPMENT CORPORATION"

REVISIONS		
CHK	CHANGE NO.	REV

digital

DRN. C Smith DATE 16-AUG-78
CHK'D M Marcy DATE
ENG. D Hamma DATE Aug 17, 78
BOARD LOCATION:
SHEET 1 OF 1
PUB:<M8581-MOS>M85811.DRW 16-AUG-78 13:47
FIRST USED ON OPTION/MODEL: MF20
NEXT HIGHER ASSEMBLY: D-DD-M8581-0

TITLE: TERMINATORS

SIZE	CODE	NUMBER	REV.
D	CS	M8581-0-RES	

MR. 1 129

"THE MATERIAL HEREIN IS FOR INFORMATION PURPOSES ONLY AND IS SUBJECT TO CHANGE WITHOUT NOTICE. DIGITAL EQUIPMENT CORPORATION ASSUMES NO RESPONSIBILITY FOR ANY ERRORS WHICH MAY APPEAR HEREIN."

DRAWING DIRECTORY

"THIS DRAWING AND SPECIFICATIONS, HEREIN, ARE THE PROPERTY OF DIGITAL EQUIPMENT CORPORATION AND SHALL NOT BE REPRODUCED OR COPIED OR USED IN WHOLE OR IN PART AS THE BASIS FOR THE MANUFACTURE OR SALE OF ITEMS WITHOUT WRITTEN PERMISSION. COPYRIGHT © 1977 DIGITAL EQUIPMENT CORPORATION.

UNIT VARIATIONS

VAR	TITLE
KL1Ø-PV	CPU LOGIC ASSY

REVISIONS		
REV.	A	
CHANGE NO.	KL10-PV-MP0002	
CHK		

USED ON OPTION/MODEL	DRN.	DATE	TITLE
KL1Ø-PV		1 MAR 77	KL1Ø-PV BASED SYSTEM
	CHK'D.	DATE	
		12 APR 77	
	PROJ. ENG.	DATE	
		12 APR 77	
	PROD.	DATE	
		12 APR 77	

digital

SIZE	CODE	NUMBER	REV
B	DD	KL1Ø-PV	A

DIST.

SHEET 1 OF 5

551

DRB 166A

"THIS DRAWING AND SPECIFICATIONS, HEREIN, ARE THE PROPERTY OF DIGITAL EQUIPMENT CORPORATION AND SHALL NOT BE REPRODUCED OR COPIED OR USED IN WHOLE OR IN PART AS THE BASIS FOR THE MANUFACTURE OR SALE OF ITEMS WITHOUT WRITTEN PERMISSION. 1977
COPYRIGHT © DIGITAL EQUIPMENT CORPORATION"

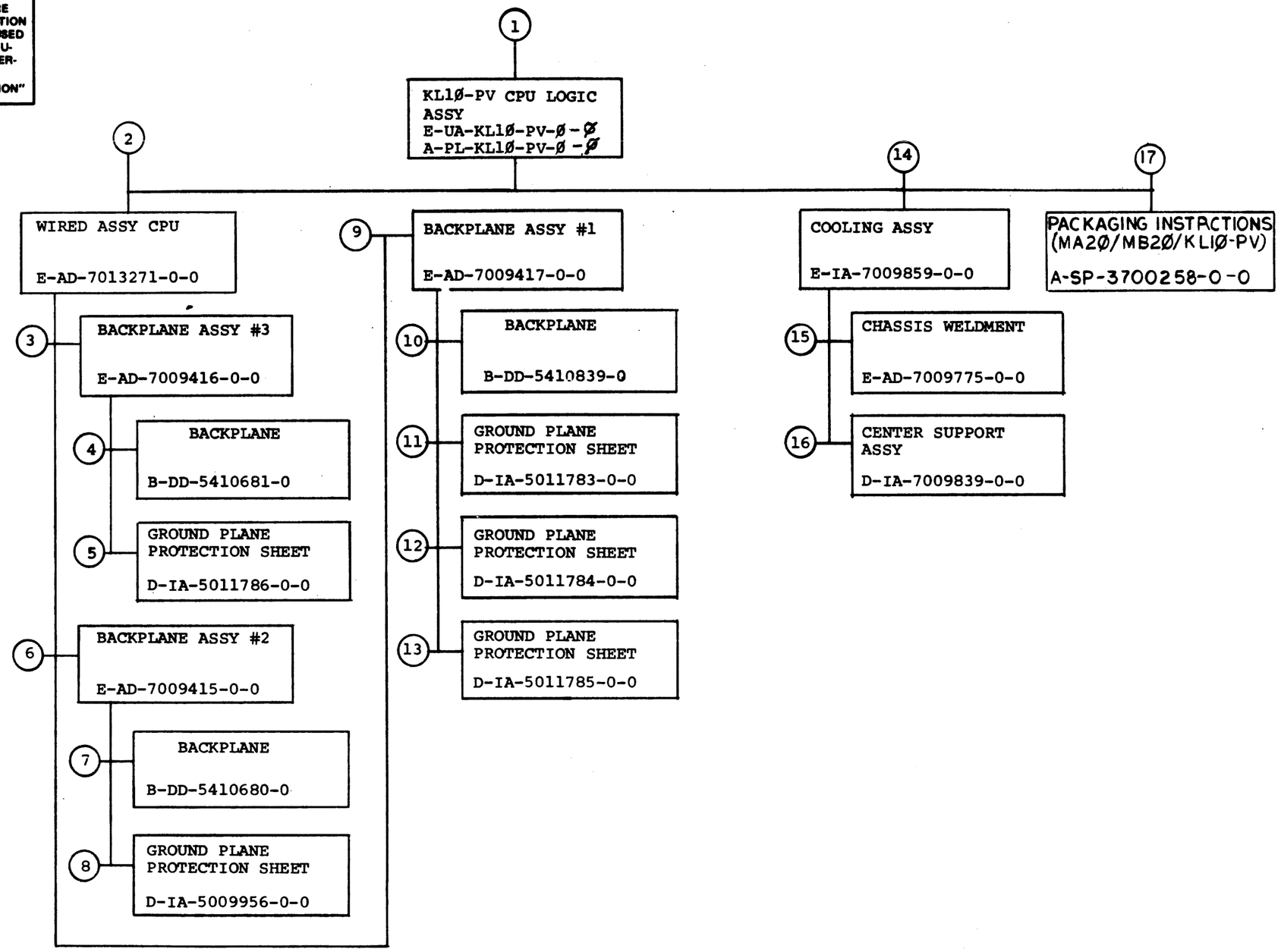

TITLE		SIZE	CODE	NUMBER	REV
KL1Ø-PV BASED SYSTEM	SHEET 2 OF 5	B	DD	KL1Ø-PV	A

552

DRB 107

FIND NO.	DRAWING NO.	DESCRIPTION	TYPE
1	B-TC-KL1Ø-PV-4	KL1Ø-PV FIELD MAINT. PRINT SET (TC)	E/M
	E-UA-KL1Ø-PV-Ø-Ø	KL1Ø-PV CPU LOGIC ASSY (UA)	E/M
	A-PL-KL1Ø-PV-Ø-Ø	KL1Ø-PV CPU LOGIC ASSY (PL)	
	D-UA-M8540-Ø-Ø	SHIFT MATRIX	E/M
	B-DD-M8540-Ø	DRAWING DIRECTORY	E/M
	D-UA-M8541-Ø-Ø	CONTROL ROM ADDRESS	E/M
	B-DD-M8541-Ø	DRAWING DIRECTORY	E/M
	D-UA-M8512-Ø-Ø	DATA PATH BOARD	E/M
	B-DD-M8512-Ø	M8512 DRAWING DIRECTORY	E/M
	D-UA-M8513-YA-Ø	CACHE CONTROL	E/M
	B-DD-M8513-YA	M8513-YA DRAWING CONTROL DIRECTORY	E/M
	D-UA-M8516-Ø-Ø	ECL, TTL TRANSLATOR	E/M
	B-DD-M8516-Ø	M8516 DRAWING DIRECTORY	E/M
	D-UA-M8517-Ø-Ø	MEMORY BUFFER	E/M
	B-DD-M8517-Ø	M8517 DRAWING DIRECTORY	E/M
	D-UA-M8518-YA-Ø	PHYSICAL MEMORY ADDRESS MODULE	E/M
	B-DD-M8518-YA	M8518-YA DRAWING DIRECTORY	E/M
	D-UA-M8519-Ø-Ø	INT MEM BUS TRANSLATOR (SBUS)	E/M
	B-DD-M8519-Ø	M8519 DRAWING DIRECTORY	E/M
	D-UA-M852Ø-YA-Ø	PAGING BOARD	E/M
	B-DD-M852Ø-YA	M852Ø-YA DRAWING DIRECTORY	E/M
	D-UA-M8522-Ø-Ø	IR, DRAM & CARRY	E/M
	B-DD-M8522-Ø	M8522 DRAWING DIRECTORY	E/M
	D-UA-M8542-Ø-Ø	VIRTUAL MEMORY ADDRESS	E/M
	B-DD-M8542-Ø	M8542 DRAWING DIRECTORY	E/M
	D-UA-M8524-Ø-Ø	SCAD PC13-17 PC FLAGS	E/M
	B-DD-M8524-Ø	M8524 DRAWING DIRECTORY	E/M
	D-UA-M8525-Ø-Ø	CONTROL REGISTER	E/M
	B-DD-M8525-Ø	M8525 DRAWING DIRECTORY	E/M
	D-UA-M8526-YA-Ø	CLOCK CONTROL	E/M
	B-DD-M8526-YA	M8526-YA DRAWING DIRECTORY	E/M
	D-UA-M8543-Ø-Ø	EBOX CONTROL LOGIC	E/M
	B-DD-M8543-Ø	M8543 DRAWING DIRECTORY	E/M
	D-UA-M8548-Ø-Ø	CONTROL RAM	E/M
	B-DD-M8548-Ø	M8548 DRAWING DIRECTORY	E/M
	D-UA-M8529-YA-Ø	MBOX CONTROL LOGIC	E/M
	B-DD-M8529-YA	M8529-YA DRAWING DIRECTORY	E/M

FIND NO.	DRAWING NO.	DESCRIPTION	TYPE
	D-UA-M8544-Ø-Ø	EBOX MEMORY CONTROL	E/M
	B-DD-M8544-Ø	DRAWING DIRECTORY	E/M
	D-UA-M8531-YA-Ø	MBOX CONTROL #3	E/M
	B-DD-M8531-YA	M8531-YA DRAWING DIRECTORY	E/M
	D-UA-M8532-Ø-Ø	PRIORITY INTERRUPT EBUS INTERFACE	E/M
	B-DD-M8532-Ø	M8532 DRAWING DIRECTORY	E/M
	D-UA-M8537-Ø-Ø	MBOX CONTROL #4	E/M
	B-DD-M8537-Ø	M8537 DRAWING DIRECTORY	E/M
	D-UA-M8538-Ø-Ø	MTR (METER)	E/M
	B-DD-M8538-Ø	M8538 DRAWING DIRECTORY	E/M
	D-UA-M8545-Ø-Ø	APR (ARITHMETIC PROCESS REGISTER)	E/M
	B-DD-M8545-Ø	DRAWING DIRECTORY	E/M
		KL1Ø-PC MODULES	
	D-UA-M8533-Ø-Ø	CHANNEL CONTROL	E/M
	B-DD-M8533-Ø	M8533 DRAWING DIRECTORY	E/M
	D-UA-M8534-Ø-Ø	CHANNEL CONTROL WORK	E/M
	B-DD-M8534-Ø	M8534 DRAWING DIRECTORY	E/M
	D-UA-M8535-Ø-Ø	CHANNEL RAM CONTROL	E/M
	B-DD-M8535-Ø	M8535 DRAWING DIRECTORY	E/M
	D-UA-M8536-Ø-Ø	CHANNEL CONTROL LOGIC	E/M
	B-DD-M8536-Ø	M8536 DRAWING DIRECTORY	E/M
	D-MU-KL1Ø-PV-CPU	MODULE UTILIZATION	E
	B-MD-7413992-0-0	ROD, SUPPORT	M
	A-SP-KL1Ø-PV-3	KL1Ø-PV UPGRADE PROCEDURE FOR KL1Ø-C	—
	A-PL-KL1Ø-PV-SH	SHIP LIST	—
	A-SP-DTE2Ø-Ø-1	DTE2Ø MANUFACTURING TEST SPEC	-
		KL1Ø-PB MODULE	
	D-UA-M8549-YE-Ø	CACHE ADDRESS SUBSTITUTE	E/M
	B-DD-M8549-YE	M8549-YE DRAWING DIRECTORY	E/M
	D-UA-M8549-YF-Ø	CACHE EXTENSION SUBSTITUTE	E/M
	B-DD-M8549-YF	M8549-YF DRAWING DIRECTORY	E/M
	D-UA-M8549-YH-Ø	CACHE DATA SUBSTITUTE	E/M
	B-DD-M8549-YH	M8549-YH DRAWING DIRECTORY	E/M
	C-SP-KL1Ø-PV-7	KL1Ø DESKEW INFORMATION	-
	A-SP-KL1Ø-PV-5	KL1Ø-PV CPU MANUFACTURING TEST SPEC	-
	A-SP-KL1Ø-PV-6	DMA2Ø SETUP PROCEDURE	-

TYPE: E ELECTRICAL
M MECHANICAL
E/M ELECTRO/MECHANICAL

digital

TITLE	SHEET	SIZE	CODE	NUMBER	REV
KL1Ø-PV BASED SYSTEM	3 OF 5	B	DD	KL1Ø-PV	A

EN-01062-2C-16-R376-(325)

553

DRB 108A

FIND NO.	DRAWING NO.	DESCRIPTION	TYPE
2	E-AD-7013271-0-0	WIRED ASSY CPU	E/M
	A-PL-7013271-0-0	WIRED ASSY CPU	E/M
	D-MD-7412001-0-0	BAR BACKPLANE TOP & BOT.	M
	C-MD-7411147-0-0	STRIP GROUND	M
	A-DC-7411881-0-0	DECAL, LOGIC ASSY REVISION	M
	K-WL-KL1Ø-PV-WL	WIRE LIST CPU	E
	D-WT-KL1Ø-Ø-AWT4	CPU ASSY PROCEDURE	E
	A-WL-KL1Ø-PV-1	GENERAL WIRING SHEET	E
	K-WL-KL1Ø-PV-Ø	REDUCED WIRE LIST	
		FIXTURE DRAWINGS REF	
	E-AD-9606103-0-0	WIRE WRAP PALLET	M
3	E-AD-7009416-0-0	BACKPLANE ASSY #1	E/M
	C-MD-7411944-0-0	BAR BACKPLANE CPU	M
	C-MD-7411399-0-0	SPACER BACKPLANE	M
	D-IA-7412900-0-0	BRACKET LOGIC FRAME	M
4	D-UA-5410681-0-0	BACKPLANE	E/M
	B-DD-5410681-0	DRAWING DIRECTORY	E/M
5	D-IA-5011786-0-0	GROUND PLANE PROTECTION SHEET	M
	D-SS-5011786-0-1	SILKSCREEN	M
6	E-AD-7009415-0-0	BACKPLANE ASSY #2	E/M
	C-MD-7411943-0-0	BAR BACKPLANE	M
	C-MD-7411399-0-0	SPACER BACKPLANE	M

FIND NO.	DRAWING NO.	DESCRIPTION	TYPE
	D-IA-7412900-0-0	BRACKET LOGIC FRAME	M
7	D-UA-5410680-0-0	BACKPLANE	E/M
	B-DD-5410680-0	DRAWING DIRECTORY	E/M
8	D-IA-5009956-0-0	GROUND PLANE PROTECTION SHT	M
	D-SS-5009956-0-1	SILKSCREEN	M
9	E-AD-7009417-0-0	BACKPLANE ASSY #1	E/M
	C-MD-7411944-0-0	BAR BACKPLANE	M
	C-MD-7411399-0-0	SPACER BACKPLANE	M
	D-IA-7412900-0-0	BRACKET LOGIC FRAME	M
10	D-UA-5410839-0-0	BACKPLANE	E/M
	B-DD-5410839-0	DRAWING DIRECTORY	E/M
11	D-IA-5011783-0-0	GROUND PLANE PROTECTION SHEET	M
	D-SS-5011783-0-1	SILKSCREEN	M
12	D-IA-5011784-0-0	GROUND PLANE PROTECTION SHEET	M
	D-SS-5011784-0-1	SILKSCREEN	M

TYPE: E ELECTRICAL
M MECHANICAL
E/M ELECTRO/MECHANICAL

digital

TITLE	SHEET	SIZE	CODE	NUMBER	REV
KL1Ø-PV BASED SYSTEM	4 OF 5	B	DD	KL1Ø-PV	A

DRB 108A

EN-01062-2C-16-R376-(325)

554

FIND NO.	DRAWING NO.	DESCRIPTION	TYPE
13	D-IA-5011785-0-0	GROUND PLANE PROTECTION SHEET	M
	D-SS-5011785-0-1	SILKSCREEN	M
14	E-IA-7009859-0-0	COOLING ASSY	M
	D-IA-7411599-0-0	DOOR RIGHT	M
	D-IA-7411600-0-0	DOOR LEFT	M
	B-IA-7411807-0-0	BRACKET MICROSWITCH	M
	B-MD-7411498-0-0	PLATE COVER	M
	C-MD-7412366-0-0	COVER CABLE	M
15	E-IA-7009775-0-0	CHASSIS WELDMENT	M
	E-IA-7411722-0-0	CARD GUIDE CHASSIS	M
	E-IA-7411721-0-0	CHASSIS SUPPORT	M
	B-MD-7411830-0-0	STIFFENER CHASSIS	M
16	D-IA-7009839-0-0	CENTER SUPPORT ASSY	M
	D-IA-7411806-0-0	SUPPORT CENTER	M
	B-MD-7411805-0-0	HINGE CENTER SUPPORT	M

FIND NO.	DRAWING NO.	DESCRIPTION	TYPE
17	A-SP-3700258-0-0	PACKAGING INSTRUCTIONS MA2Ø/MB2Ø/KL1ØPV	M

TYPE: E ELECTRICAL
M MECHANICAL
E/M ELECTRO/MECHANICAL

digital

TITLE KL1Ø-PV BASED SYSTEM

SHEET 5 OF 5 | SIZE B | CODE DD | NUMBER KL1Ø-PV | REV A

SSS DRB 108A

This drawing and specifications, herein, are the property of Digital Equipment Corporation and shall not be reproduced or copied or used in whole or in part as the basis for the manufacture or sale of items without written permission. COPYRIGHT 1977
DIGITAL EQUIP. CORP.

FIRST USED ON OPTION MODEL	QTY.	DESCRIPTION	PART NO.	ITEM NO.
KLIØ-PV		PARTS LIST		

DRN. M. Pasarelli	DATE 22FEB77	digi EQUIPMENT CORPORATION MAYNARD, MASSACHUSETTS
CHK'D.	DATE 24MAR77	TITLE REDUCED WIRE LIST
ENG.	DATE 25Mar77	
PROJ. ENG.	DATE 25Mar77	
PROD.	DATE 25Mar77	
NEXT HIGHER ASSEMBLY E-UA-KLIØ-PV-Ø		SIZE K · CODE WL · NUMBER KLIØ-PV-Ø · REV. C
SCALE —		
SHEET 1 OF 1		DIST.

REVISIONS

REV.	CHANGE NO.	CHK
B	KLIØ-PV-00001	B.C.
C	KLIØ-PV-MR006	G.P.

FORM NO. DEC 103

556

"THIS DRAWING AND SPECIFICATIONS, HEREIN, ARE THE PROPERTY OF DIGITAL EQUIPMENT CORPORATION AND SHALL NOT BE REPRODUCED OR COPIED OR USED IN WHOLE OR IN PART AS THE BASIS FOR THE MANUFACTURE OR SALE OF ITEMS WITHOUT WRITTEN PERMISSION.
COPYRIGHT © 1977 , DIGITAL EQUIPMENT CORPORATION"

FOR EACH OPTION OR SERIAL NUMBER WIRE THE SOURCE LISTED ABOVE THE OPTION OR SERIAL NUMBER BIT TO THE SOURCE TO MAKE THE BIT TRUE.

OPTIONS:

SOURCE:	4D44E1
OPTIONS: 50 HZ	4E43M2
CACHE AVAIL	4E43A1
CHANNEL AVAIL	4E43E1
KLIØ-PV CPU	4D43D2
MASTER OSCILLATOR	4D43E1

SERIAL NUMBERS:

SOURCE:	4D42E
2048	4E41M2
1024	4E41A1
512	4E41E1
256	4D41D2
128	4D41E1
64	4E41F2

SERIAL NUMBERS:

SOURCE:	4D40E1
32	4E39M2
16	4E39A1
8	4E39E1
4	4D39D2
2	4D39E1
1	4E39F2

REVISIONS			
CHK	CHANGE NO.		REV.
JH	KLIØ-PV-MR007		A
		17-MAY-79	
	C.SMITH		

DESCRIPTION			DWG./PART NO.			ITEM NO.
UNLESS OTHERWISE SPECIFIED DIMENSIONS ARE IN INCHES						
ANGLES ±0° 30'	CLASS OF ACCURACY (CHECK ONE)	NOMINAL DIMENSION RANGE INCHES				
		OVER 0 TO 0.2	OVER 0.2 TO 1.2	OVER 1.2 TO 4.0	OVER 4.0 TO 12.0	OVER 12.0 TO 40.0	OVER 40.0 TO 80.0
SURFACE QUALITY IN MICROINCHES	MEDIUM	±.004	±.008	±.012	±.016	±.024	±.04
	PREFERRED	±.012	±.016	±.025	±.04	±.063	±0.1

QUANTITY & VARIATION

THIRD ANGLE PROJECTION

REMOVE BURRS AND BREAK SHARP CORNERS

DO NOT SCALE DWG

MATERIAL —//—

FINISH —//—

DRN	Pescapolli	27-JAN-77
CHK'D		
ENG.		12 APR 79
PROJ. ENG.		12 APR 79
PROD.		12-4-79
NEXT HIGHER ASSY.	B-DD-KLIØ-PV	
SCALE	—//—	
SHEET	1 OF 1	

FIRST USED ON: KLIØ-PV

digital

TITLE: OPTION / SERIAL NUMBER CHART

SIZE	CODE	NUMBER	REV.
D	SP	KLIØ-PV-2	A

DIST.

557

DEC FORM NO. SRD 100-C

"THIS DRAWING AND SPECIFICATIONS, HEREIN, ARE THE PROPERTY OF DIGITAL EQUIPMENT CORPORATION AND SHALL NOT BE REPRODUCED OR COPIED OR USED IN WHOLE OR IN PART AS THE BASIS FOR THE MANUFACTURE OR SALE OF ITEMS WITHOUT WRITTEN PERMISSION.
COPYRIGHT ©1977, DIGITAL EQUIPMENT CORPORATION"

UNIT	MODULE REPLACED	UNIT(S) REQUIRING DESKEW
KL1Ø-PV CPU	M8516	ALL RH2Ø UNITS
	M8519	ALL DMA2Ø, MA2Ø/MB2Ø
	M8526-YA	DMA2Ø, MA2Ø/MB2Ø, ALL RH2Ø UNITS
CABLES	SBUS - BC2ØC	THE DMA2Ø OR MA/MB2Ø CONNECTED TO THAT SBUS
	E & C BUS - BC11 OR BC2ØC	ALL RH2Ø UNITS
MA2Ø	M8561 OR M8562	THE MA2Ø IN WHICH THE MODULE WAS REPLACED
MB2Ø	M8565 OR M8568	THE MB2ØIN WHICH THE MODULE WAS REPLACED
DMA2Ø	M8562Ø OR M8563	DMA2Ø
RH2Ø	M8556	THE RH2Ø IN WHICH THE MODULE WAS REPLACED
	M8559	ALL RH2Ø UNITS

UNIT TO BE DESKEWED	REFERENCE DOCUMENTATION
DMA2Ø	A-SP-KL1Ø-PV-6
MA2Ø, MB2Ø	D-BS-MB2Ø-Ø-INS
RH2Ø	A-SP-RH2Ø-Ø-SP
ALL OF THE ABOVE	EK-2ØXX-IN-ØØ1

QUANTITY & VARIATION

DESCRIPTION	DWG./PART NO.	ITEM NO.

UNLESS OTHERWISE SPECIFIED DIMENSIONS ARE IN INCHES

ANGLES ±0° 30'	CLASS OF ACCURACY (CHECK ONE)	NOMINAL DIMENSION RANGE INCHES					
		OVER 0 TO 0.2	OVER 0.2 TO 1.2	OVER 1.2 TO 4.0	OVER 4.0 TO 12.0	OVER 12.0 TO 40.0	OVER 40.0 TO 80.0
SURFACE QUALITY IN MICROINCHES	MEDIUM	±.004	±.008	±.012	±.016	±.024	±.04
	PREFERRED	±.012	±.016	±.025	±.04	±.063	±0.1

THIRD ANGLE PROJECTION

REMOVE BURRS AND BREAK SHARP CORNERS

DO NOT SCALE DWG

MATERIAL —//—

FINISH —//—

DRN. [signature] 28 APR 77
CHK'D [signature] 28 APR 77
ENG. [signature] 12 APR '77
PROD. ENG. [signature] 12 APR '77
PROD. [signature] 12 APR 77

NEXT HIGHER ASSY. B-DD-KLIØ-PV

SCALE —//—

SHEET 1 OF 1

FIRST USED ON KLIØ-PV

digital

TITLE KLIØ DESKEW INFORMATION

SIZE	CODE	NUMBER	REV.
C	SP	KLIØ-PV-7	

DIST.

REVISIONS		
CHK	CHANGE NO.	REV.

DEC FORM NO. DRC 100-C

558

This drawing and specifications, herein, are the property of Digital Equipment Corporation and shall not be reproduced or copied or used in whole or in part as the basis for the manufacture or sale of items without written permission.

DIGITAL EQUIPMENT CORPORATION
MAYNARD, MASSACHUSETTS

ENGINEERING SPECIFICATION

DATE 24 MAR 77

TITLE DMA 20 SETUP PROCEDURE

REVISIONS

REV	DESCRIPTION	CHG NO	ORIG	DATE	APPD BY	DATE

ENG	APPD	SIZE	CODE	NUMBER	REV
		A	SP	KL1Ø-PV-6	

559

DEC 16-(327)-1071-N971 11 APR 77
DRA 107

ENGINEERING SPECIFICATION

digital CONTINUATION SHEET

TITLE DMA20 SETUP PROCEDURE

This document specifies DMA20 Deskew procedure and setup for Data Warning Adjustment.

1.0 Adjustment procedure for deskewing the DMA20 clocks.

NOTES:
i. Use identical probes with short ground clips.
ii. This procedure must be performed when any of the following modules are changed:
M8526 or M8526-YA, M8519, SBUS Cables, M8563, M8560.

a. Attach a probe (either channel 3 or external sync) to "A CHANGE COMING L" 4E22P2. Set the sync for a negative edge.

b. Attach channel 1 probe to 4D33P1 (MTR CLOCK) Use .5V/cm and set scope such that the ground reference is 1.3V above the centerline.

c. Attach channel 2 to 1A02R2 (DMC2 CLK DESKEW POINT) Use .5V/cm and adjust scope such that the ground reference is 1.5V below the center line.

d. The Mbox clock which occurs after "A CHANGE COMING L" goes low is the "A" phase clock. The second clock tic after the "A" phase clock tic is the "B" phase clock tic. The second clock tic after the "B" phase clock tic is another "A" phase clock tic, etc.

SIZE	CODE	NUMBER	REV
A	SP	KL1Ø-PV-6	

DEC FORM NO EN-01022-16-N370-(381)
DRA 108

e. Adjust DL2 on the M8560 in slot 1AF03 (it is the 4th delay from the top) until the clock on channel 2 which is affected by this adjustment crosses the centerline at the same time as the "A" phase clock on channel 1.

f. Adjust DL3 on the M8560 in slot 1AF03 (it is the top delay) until the clock which is affected by this adjustment crosses the centerline at the same time as the "B" phase Mbox clock which is on channel 1.

h. Connect channel 2 to 1D03F1 (DTR3 CLK 125 NS A H).

i. Adjust DL1 on the M8560 in slot 1AF03 (it is the bottom delay) until the clock on channel 2 which is affect by this adjustment crosses the centerline at the same time as the "A" phase clock on channel 1.

j. Connect channel 2 to 1D03L2 (DTR3 CLK 62 NS A H).

k. Adjust DL4 in slot 1AF03 (it is the second delay from the top) until the clock on channel 2 which is affected by this delay crosses the centerline at the same time as the "A" phase clock on channel 1.

l. Adjust DL5 in slot 1AF03 (it is the third delay from the top) until the clock on channel 2 which is affected by this delay crosses the centerline at the same time as the "B" phase clock on channel 1.

m. You have now completed the adjustments for clock deskew on the DMA20.

2.0 Adjustment procedure for setting up DATA WARNING when used with the DMA20.

****

NOTES: 1. Use identical probes with short ground clips. This procedure uses 4-BUS mode, assuming the system has multiples of 4 memories. This general procedure will work in any bus mode.

2. The memory must be setup to return DATA WARNING SLOW and ADDRESS ACK (NT) only. No other combination is legal!!

****

a. Set-up the DMA20 4-BUS mode doing a small loop which reads from only one memory on a given bus such as:

```
10/MOVE 0, 100   (200000 100)
11/MOVE 0, 101   (200000 101)
12/MOVE 0, 102   (200000 102)
13/MOVE 0, 103   (200000 103)
14/JRST 10       (254000 10)
```

b. Put channel 1 on KBUS"X" DATA WARNING.

```
KBUS0 1C05D1
KBUS1    1C07D1
KBUS2    1C09D1
KBUS3    1C11D1
```

c. Put channel 2 on KBUS"X" RD RS.

```
KBUS0    1C05J1
KBUS1    1C07J1
KBUS2    1C09J1
KBUS3    1C11J1
```

d. Sync on channel 1 going negative.

560

e. Adjust each memory such that DATA WARNING (on channel 1) occurs 260 NS prior to RD RS (on channel 2).

f. Modify program to set up the next four memories.

561

DIGITAL EQUIPMENT CORPORATION
MAYNARD, MASSACHUSETTS

PARTS LIST

MADE BY	CHECKED	SECTION 1
DATE 12 APR 77	DATE 12 APR 77	
ENG J.P. McElroy	PROD	ISSUED SECT. 1
DATE 12 APRIL 77	DATE 12 APR 77	

ITEM NO.	DWG NO./PART NO.	DESCRIPTION	QUANTITY/VARIATION
~~1~~	~~B-MD-7303083-0-0~~	~~COOLING ASSY~~	~~1~~
2	E-AD-7013271-0-0	WIRED ASSY CPU	1
3	1210775	SWITCH MICRO SPDT	1
4	9006075-1	SCR PHL PAN HD #10-32 X .75	8
5	9006557	NUT, KEPS 4-40	10
6	M8512	DATA PATH BOARD	6
7	M8513-YA	CACHE CONTROL	1
8	M8516	ECL, TTL TRANSLATOR	3
9	M8517	MEMORY BUFFER	3
10	M8518-YA	PHYSICAL MEMORY ADDRESS MODULE	1
11	M8519	INT MEM BUS TRANSLATOR (SBUS)	2
12	M852Ø-YA	PAGING BOARD	1
13	M8522	IR D RAM & CARRY	1
14	M8524	SCAD PC13-17 PC FLAGS	1
15	M8525	CONTROL REGISTER	1
16	M8526-YA	CLOCK CONTROL	1
17	M8529-YA	M BOX CONTROL LOGIC	1
18	M8531-YA	M BOX CONTROL 3	1
19	M8532	PRIORITY INTERRUPT E BUS INTERFACE	1
20	M8533 ***	CHANNEL CONTROL	1
21	M8534 ***	CHANNEL CONTROL WORK	1
22	M8535 ***	CHANNEL RAM CONTROL	1

TITLE	ASSY NO.	SIZE	CODE	NUMBER	REV.	ECO NO.
KLIØ-PV CPU LOGIC ASSY	E-UA-KLIØ-PV-Ø	A	PL	KLIØ-PV-Ø	B	KLIØPV MRØØ8
	SHEET 1 OF 3	DIST.				

DEC FORM DEC 16-(325)-1031-N870
DRA 110

MR

DIGITAL EQUIPMENT CORPORATION
MAYNARD, MASSACHUSETTS

PARTS LIST

MADE BY	CHECKED	SECTION 1
DATE 12 APR 77	DATE 12 APR 77	
ENG J.P. McElroy	PROD	ISSUED SECT. 1
DATE 12 APRIL 77	DATE 12 APR 77	

ITEM NO.	DWG NO./PART NO.	DESCRIPTION	QUANTITY/VARIATION
23	M8536 ***	CHANNEL CONTROL LOGIC	1
24	M8537	M BOX CONTROL #4	1
25	M8538	MTR (METER)	1
26	M854Ø	SHIFT MATRIX	1
27	M8541	CONTROL RAM ADDRESS	1
28	M8542	VIRTUAL MEMORY ADDRESS	1
29	M8543	E BOX CONTROL LOGIC	1
30	M8544	E BOX MEMORY CONTROL	1
31	M8545	APR (ARITHMETIC PROCESS REGISTER)	1
32	M8548	CONTROL RAM	5
33	M8549-YE.**	CACHE ADDRESS SUBSTITUE	REF
34	M8549-YF**	CACHE EXTENSION SUBSTITUE	REF
35	M8549-YH**	CACHE DATA SUBSTITUE	REF
36	D-MU-KL1Ø-Ø-CPU	MODULE UTILIZATION	REF
37	9009255	LABEL ADHESIVE BACK	1
38	B-MD-7413992-0-0	ROD, SUPPORT	2
39	9006655	WASHER, FLAT	8
40	9008274	FOAM .38 X .38	A/R
41	M8514 *	CACHE ADDRESS	REF
42	M8515 *	CACHE EXTENSION	REF
43	M8521 *	CACHE DATA	REF
44	A-DC-7412561-0-0	POWER INTERLOCK WARNING DECAL	1

TITLE	ASSY NO.	SIZE	CODE	NUMBER	REV.	ECO NO.
KLIØ-PV CPU LOGIC ASSY	E-UA-KLIØ-PV-Ø	A	PL	KLIØ-PV-Ø	B	
	SHEET 2 OF 3	DIST.				

DEC FORM DEC 16-(325)-1031-N870
DRA 110

MR

DIGITAL EQUIPMENT CORPORATION
MAYNARD, MASSACHUSETTS

PARTS LIST

MADE BY [illegible] DATE 12 APR 77	CHECKED [illegible] DATE 12 APR 77	SECTION
ENG [illegible] DATE 12 APRIL 1977	PROD [illegible] DATE 12 APR 77	ISSUED SECT.

ITEM NO.	DWG NO./PART NO.	DESCRIPTION	QUANTITY VARIATION
~~45~~	~~9008479-1~~	~~FOAM 14.0 W 20.0 W .19 THK~~	~~2~~
46	A-SP-3700258-0-0	INSTR. PKG., MA2Ø/MB2Ø/KLIØ-PV	1
47	E-IA-7009859-1-0	COOLING ASSY, SINGLE, FULL SIZE DOOR	1
		* USED ON MCA2Ø	
		** ALSO PART OF KL1Ø-PB	
		*** KL1Ø-PC	

TITLE	ASSY NO.	SIZE	CODE	NUMBER	REV	ECO NO.
KL1Ø-PV CPV LOGIC ASSY	E-UA-KL1Ø-PV-Ø	A	PL	KL1Ø-PV-Ø	B	
	SHEET 3 OF 3	DIST				

DEC FORM
DRA 110

MR

563

NOTES:

1. INSTALL ITEMS 5, 38 & 39 IN REAR HOLES #18 & #37.
2. ATTACH DECAL (ITEM #44) TO OUTSIDE OF REAR DOOR.
3. PACKAGE PER ITEM #46.

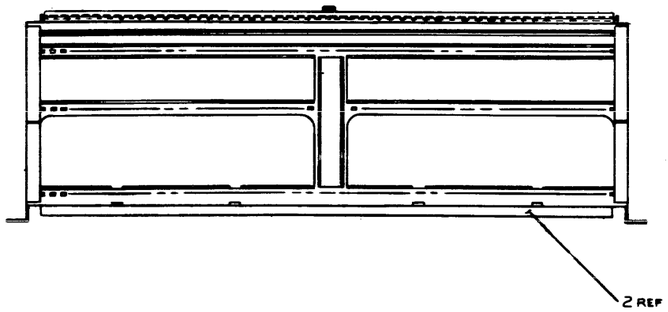

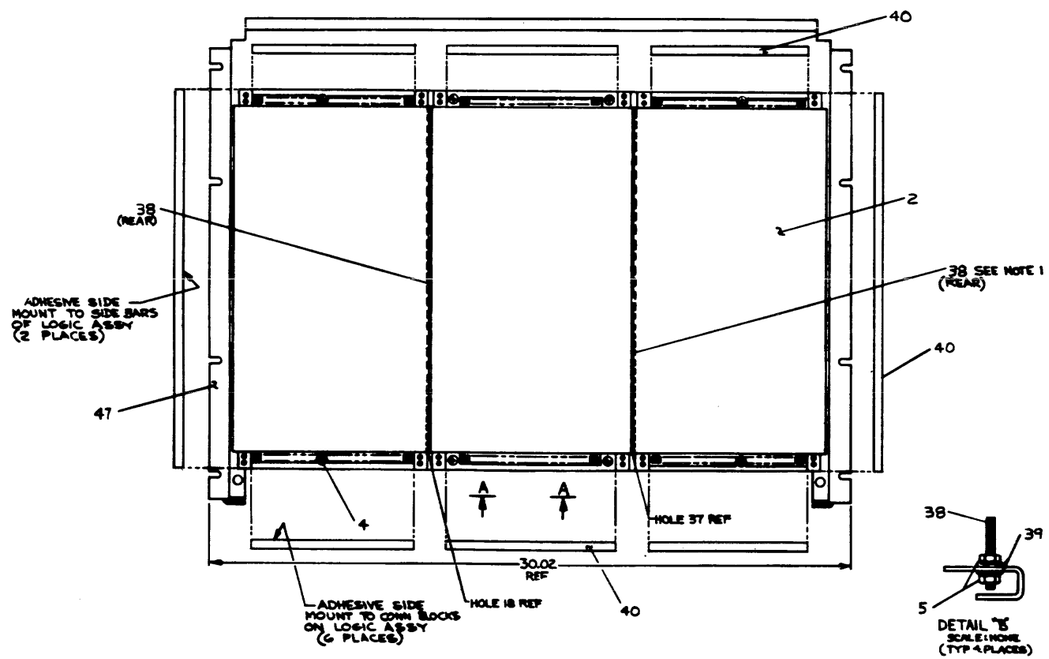

DETAIL "B"
SCALE: NONE
(TYP 4 PLACES)

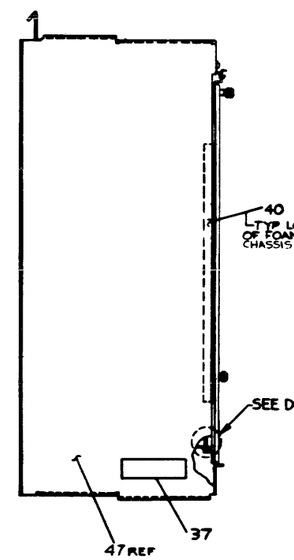

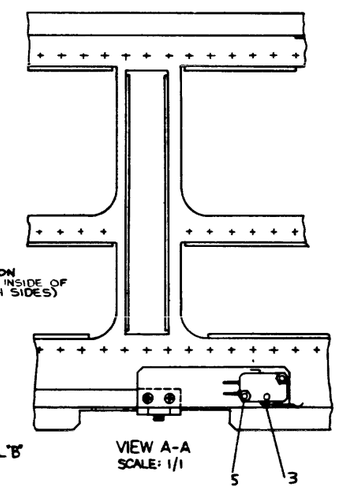

VIEW A-A
SCALE: 1/1

CAUTION:
OFF SHEET PARTS LIST EXISTS
SEE: A-PL-KLIØ-PV-Ø

TITLE	KLIØ-PV CPU LOGIC ASSY	
	KLIØ-PV	
SEE PARTS LIST	B-DD-KLIØ-PV	
	UA KLIØ-PV-Ø	B

564

THIS DRAWING AND SPECIFICATIONS, HEREIN, ARE THE PROPERTY OF DIGITAL EQUIPMENT CORPORATION AND SHALL NOT BE REPRODUCED OR COPIED OR USED IN WHOLE OR IN PART AS THE BASIS FOR THE MANUFACTURE OR SALE OF ITEMS WITHOUT WRITTEN PERMISSION. COPYRIGHT © 1977 , DIGITAL EQUIPMENT CORPORATION

DO NOT SCALE DRAWING

LEGEND	
NUMBER	VARIATION
7009417-0	MODEL "A" CPU
7009417-01	MODEL "B" CPU

NOTES:

1. ~~CUT ITEMS 16, 17 & 18 TO LENGTH GIVEN IN DETAIL "A". GROUND PLANE PROTECTION SHEETS SHOULD BE TAPED TOGETHER AS~~ SHOWN WITH ITEM #1A (2PLACES)
2. FOR ASSY AID REFER TO PROCESS SHEET A-SP-KL10-SPS
3. BEFORE ASSY OF ITEM #1, (BOARD) REWORK PER D-UA-5410839-0-0
4. AFTER PASSING THRU SOLDER WAVE SOLDER WIRE WRAP POST (ITEM #19) TO BOARD (ITEM #4)

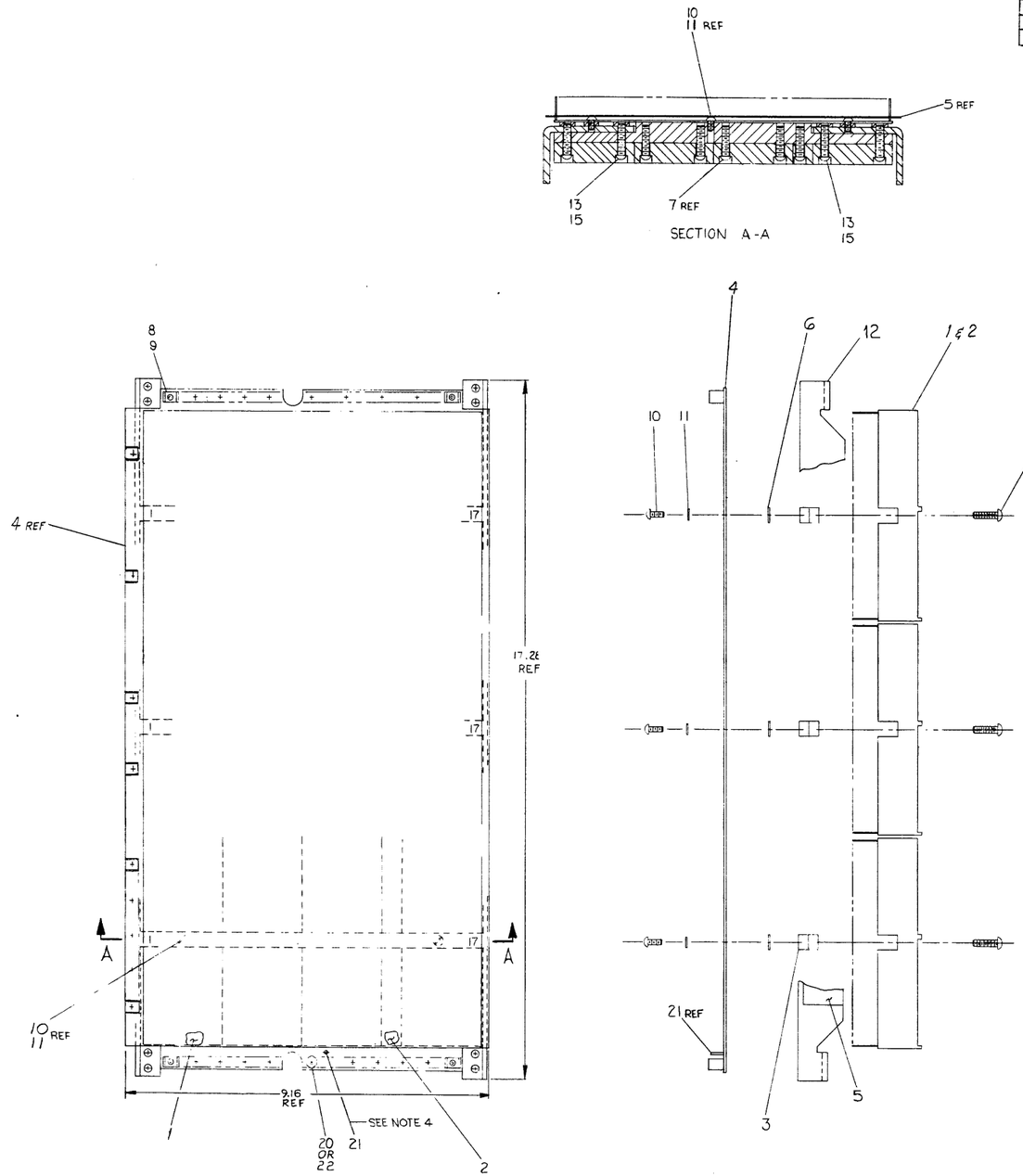

ITEM NO.	7009417-01	7009417-00	PART NO.	DESCRIPTION
22	—	1	12-14225	CONN SMA, STRAIGHT
21	1	1	9009149	POST, WIRE WRAP
20	1	—	1212351	CONN, COAX
19	~~1~~		~~1212385-1~~	~~WIRE WRAP POST~~
18	~~1~~		~~D-UA-5011763-0-0~~	~~GND PLANE PROTECTION SHT~~
17	~~1~~		~~D-UA-5011764-0-0~~	~~GND PLANE PROTECTION SHT~~
16	~~1~~		~~D-UA-5011765-0-0~~	~~GND PLANE PROTECTION SHT~~
15	12		9006690	WASHER, LOCK #8
14	~~AR~~		~~9009647~~	~~TAPE, TRANSPARENT .25W~~
13	12	12	9009664-6	SCR, PHL FIL HD #8-32×.81
12	2	2	C-1A-7412900-0-0	BRACKET, LOGIC FRAME
11	9	9	9006633	WASHER, LOCK INT TOOTH #6
10	9	9	9006021-4	SCR, SLOTTED BD HD #6 32×.31
9	29	29	9007113	FASTON TAB
8	29	29	9009000-00	EYELET
7	27	27	9006120-6	SCR, FIL HD POZI DRIVE #8-32×.62
6	3	3	C-MD-7411399-2-0	SPACER, BACK PLANE
5	1	1	9009255	LABEL, ADHESIVE BACK
4	1	1	5010838	ETCH CIRCUIT BOARD
3	3	3	C-MD-7411944-0-0	BAR, BACK PLANE
2	3	3	D-PS-1211425-0-0	72 PIN CONN BLOCK
1	12	12	E-SC-1210258-01	288 PIN CONN BLOCK (H863)

FIRST USED ON OPT/MOD KL10

PARTS LIST

TOLERANCES DECIMALS
.XXX = ± .005
.XX = ± .02
.X = ± .1

UNLESS OTHERWISE SPECIFIED DIMENSION IN INCHES TOLERANCES FRACTIONS ± 1/64 ANGLES ± 30' FINAL SURFACE QUALITY √ REMOVE BURRS AND BREAK SHARP CORNERS

MATERIAL SEE PARTS LIST

FINISH —"—

DRN. 1-6-23 CHK'D 1-12-23 ENG. 1-12-23 PROJ. ENG. 1-12-23 PROD. 1-12-23 NEXT HIGHER ASSY E-AD-7009438-0-0

SCALE 1/1 SHEET 1 OF 1

digital EQUIPMENT CORPORATION MAYNARD, MASSACHUSETTS

TITLE CPU #1 BACK PLANE ASSY

SIZE E CODE AD NUMBER 7009417-0-0 REV. D DIST.

REVISIONS

CHK	CHANGE NO.	REV.
	7009417-00001	A
	PROTOTYPE	
	KL10-00017	B
	11 MAR 77	
	J. HACKENBERG	
	7009417-00022	C
	A. HACKENBERG	
	KL10-PV-M8008	D
	10 Oct 78	
	D. CHIN	
	14 Nov 78	

SEE ITEM NO. BOM 100

565

"THIS DRAWING AND SPECIFICATIONS, HEREIN, ARE THE PROPERTY OF DIGITAL EQUIPMENT CORPORATION AND SHALL NOT BE REPRODUCED OR COPIED OR USED IN WHOLE OR IN PART AS THE BASIS FOR THE MANUFACTURE OR SALE OF ITEMS WITHOUT WRITTEN PERMISSION. COPYRIGHT © 1978 DIGITAL EQUIPMENT CORPORATION"

NOTES:
1. FOR DRAWING DIRECTORY, REFER TO: B-DD-5410839-0
2. CAUTION SHEETS 2 THRU 5 ARE "E" SIZE

QTY	REF. DESIGNATION	DESCRIPTION	PART NO.	ITEM NO.
1		ETCHED CIRCUIT BOARD	5010838	1
30		TAB DOUBLE	9007113	2
30		EYELET	9006732	3

PARTS LIST

FIRST USED ON OPTION MODEL: KLIØ

ETCH ~~BOARD~~ REV.

IC TYPE	GND	+5V

GND AND 5V ARE USUALLY PIN 7 AND 14 RESPECTIVELY EXCEPTIONS ARE STATED ABOVE

IC PIN LOCATIONS

DEC NO.	EIA NO.	DEC NO.	EIA NO.

SEMICONDUCTOR CONVERSION CHART

REVISIONS: REV. C — CHANGE NO. ORI G — CHK X — Roc 5410839-MR003 — 2 Mar 78 — D. LITWINETZ 8/1/78

DRN. M.PASCARELLI	DATE 16SEP76	digital
CHK'D. N.RHEAULT	DATE 23FEB77	TITLE KLIØ BACKPLANE CPU #1
ENG. D.LITWINETZ	DATE 23FEB77	
PROJ. ENG. D.LITWINETZ	DATE 23FEB77	
PROD. W.EMBY	DATE 25FEB77	
NEXT HIGHER ASSY B-DD-5410839-0		SIZE D CODE UA NUMBER 5410839-0-0 REV. C
SCALE —		
SHEET 1 OF 5		DIST.

DEC FORM NO. DND 136.8

566

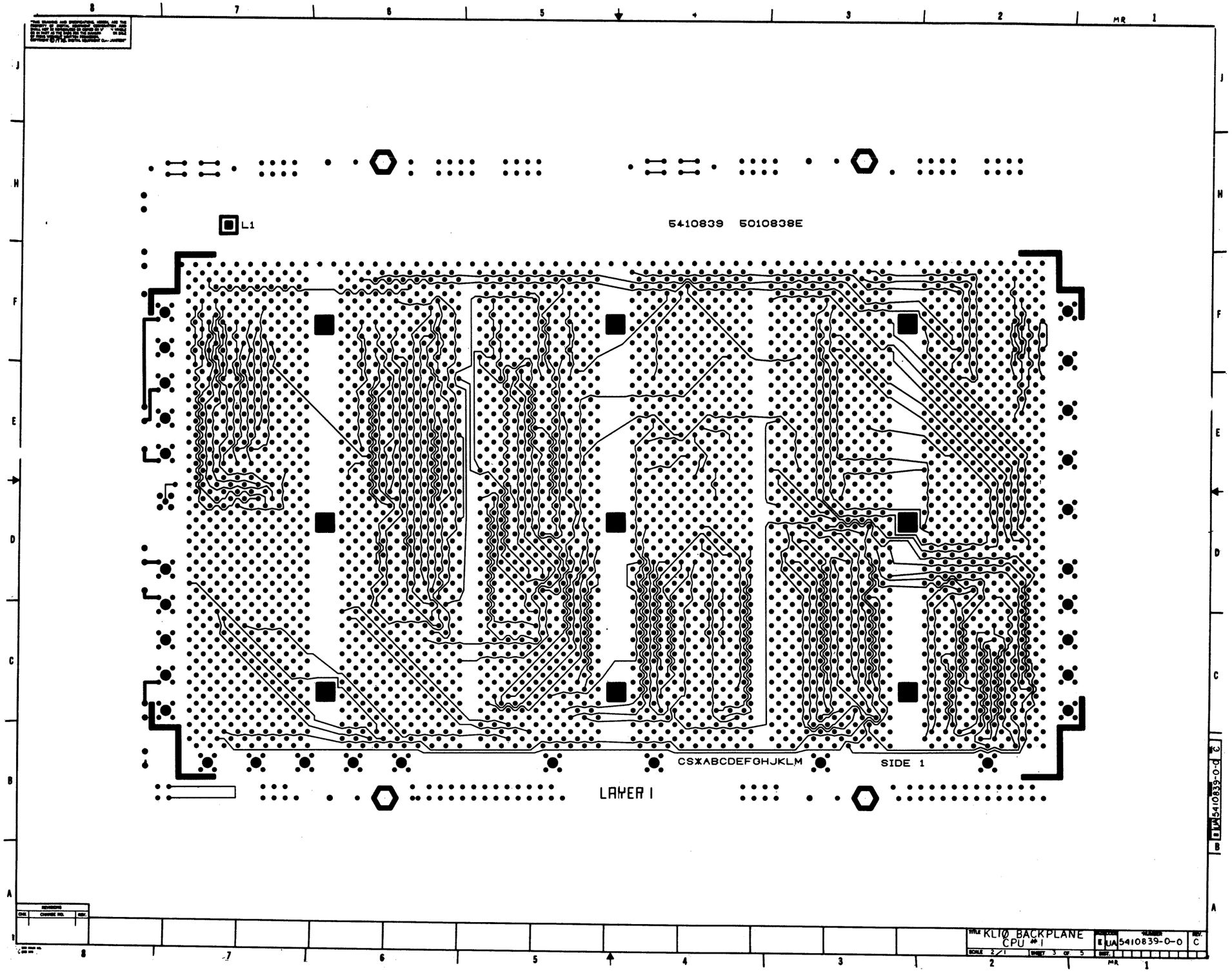
L1
5410839 5010838E
CSXABCDEFGHJKLM
SIDE 1
LAYER I
KL10 BACKPLANE
CPU #1
5410839-0-0
C

S67

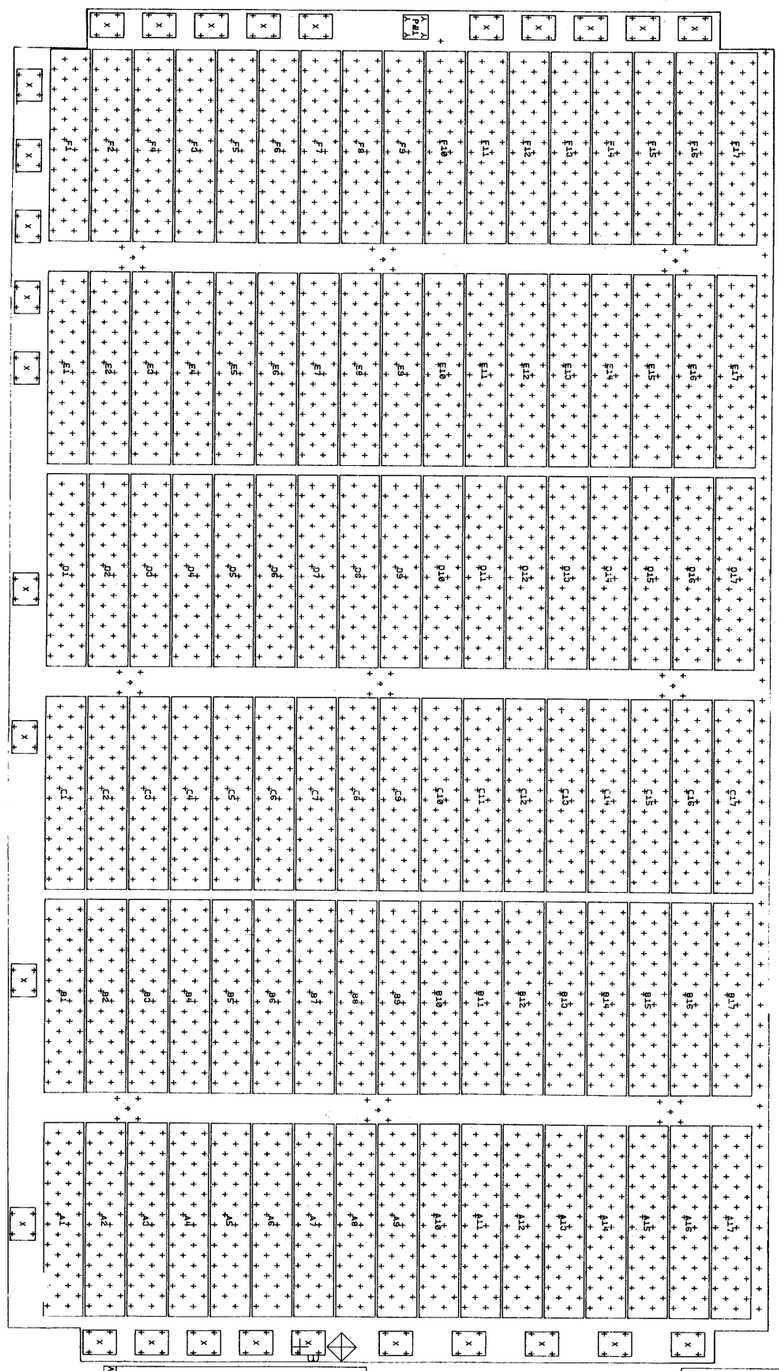

NOTES:

CHN	CHANGE NO.	REV

ETCH REV.
P.C. DESIGN DATA BASE REV.

SIGNATURES	DATE
DRN. M.PASCARELLI	16FEB77
CHK'D. N. RHEAULT	20FEB77
ENG. D. LITWINETZ	20FEB77
PROJ.ENG. D. LITWINETZ	20FEB77
PROD. W.EMBY	25FEB77

digital

TITLE KLIØ BACKPLANE CPU*1

SCALE 2/1	SIZE	CODE	NUMBER	REV
SHT. 2 OF 5	E	UA	5410839-0-0	C

NEXT HIGHER ASSY. 8-DD-5410839-0

D-D-6030VS

525

S69

TITLE KL10 BACKPLANE CPU #1			
SCALE 2/1	SHEET 4 OF 5	SIZE E	NUMBER UA5410839-0-0
		DIST.	REV. C

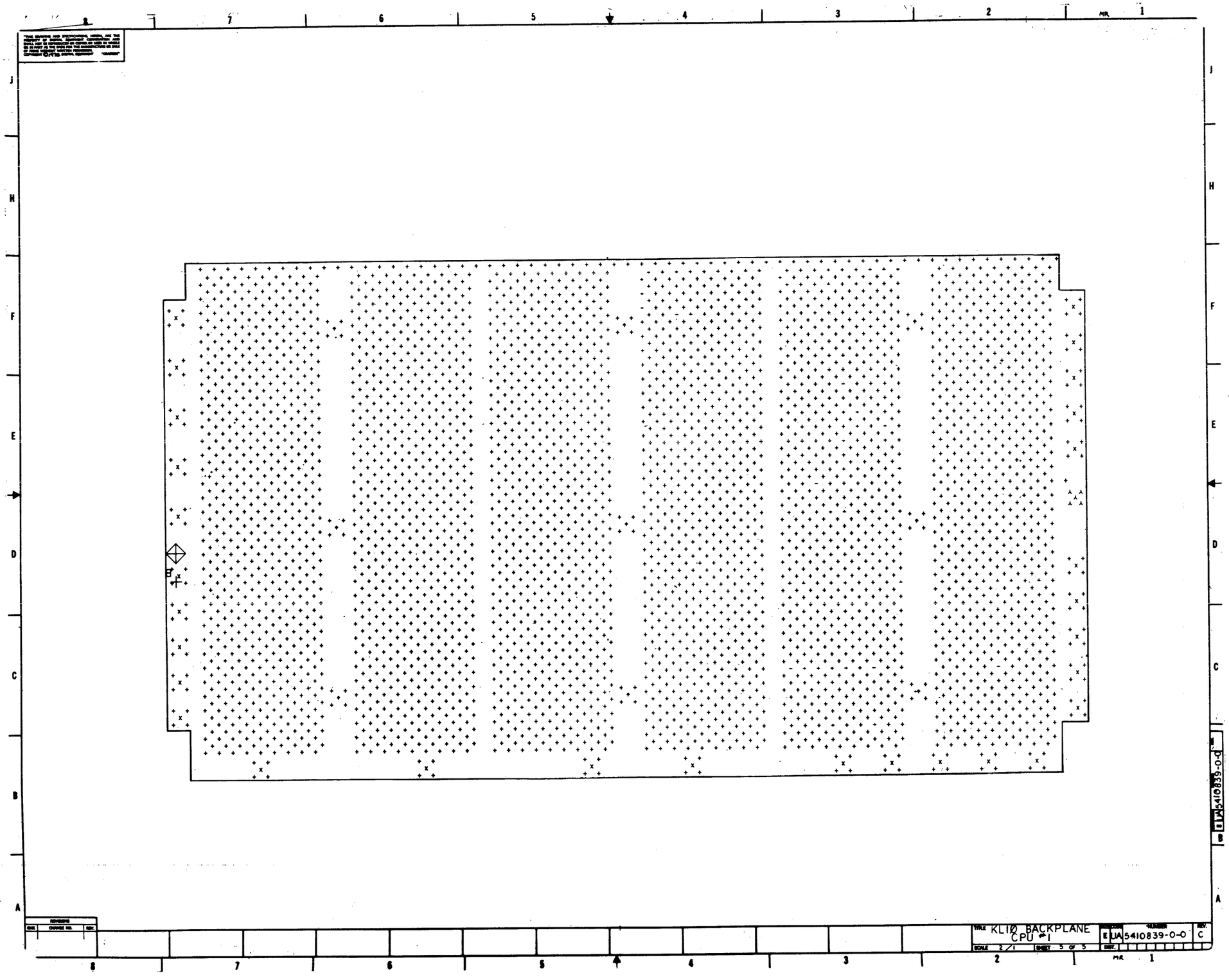

570

DO NOT SCALE DRAWING

NOTES:
~~1. CUT ITEM #5 TO LENGTH WHEN IN DETAILING GROUND PLANE PROTECTION SHEETS TO BE TAPED TOGETHER AS SHOWN.~~
2. BEFORE ASSY OF ITEM #4 (BOARD) :WORK PER D-UA-5410680-0-0
3. FOR ASSY AID, REFER TO PROCESS SHEET A-SP-KL10-SPS.

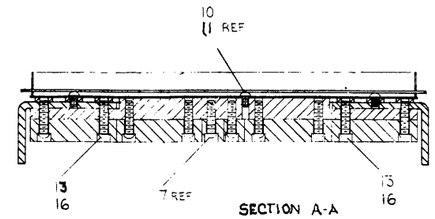

SECTION A-A

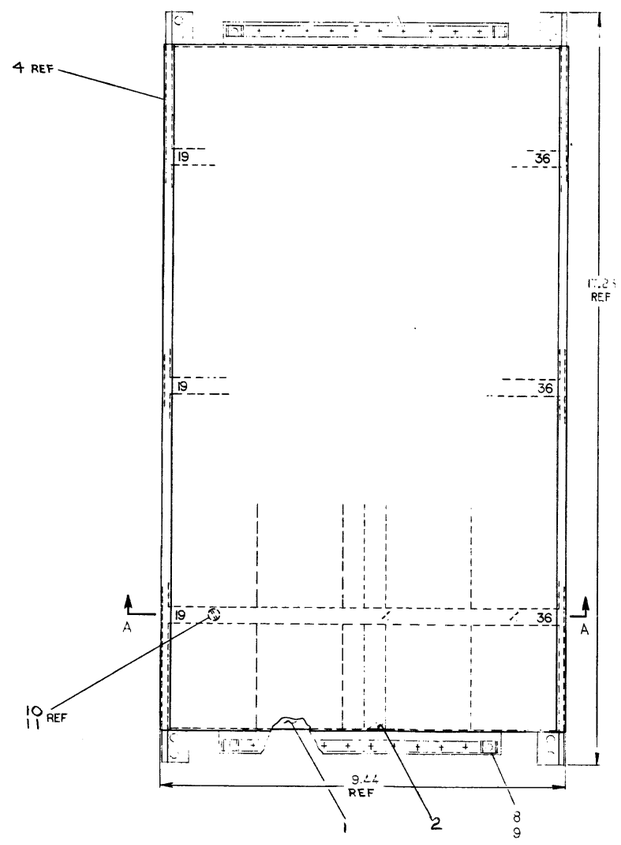

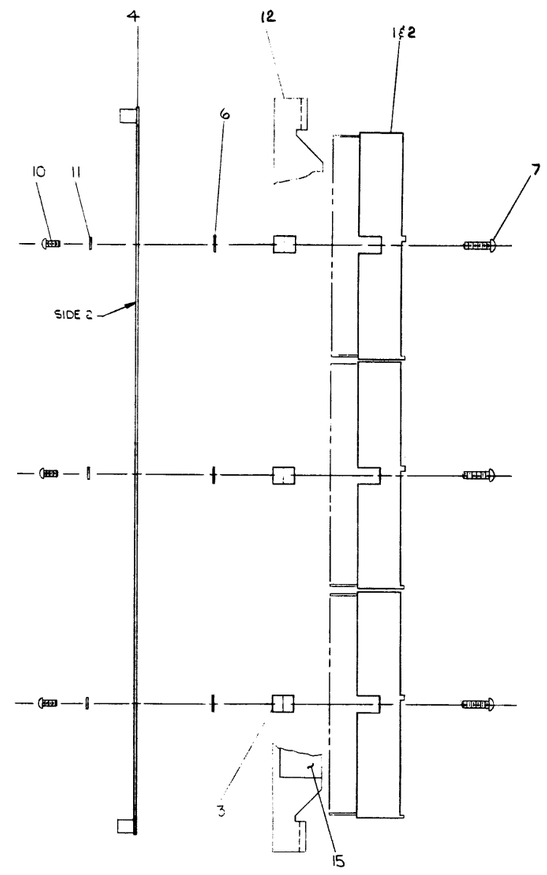

12	WASHER, LOCK #8	9006690	16
1	LABEL, ADHESIVE BACK	9009255	15
~~NR~~	~~TAPE, TRANSPARENT 3/8 W~~	~~9009647~~	~~14~~
12	SCR, PHL FIL HD #8-32×.81	9009664-6	13
2	BRACKET LOGIC FRAME	D-UA-7412900-0-0	12
9	WASHER, LOCK INT TOOTH #6	9006633	11
9	SCR, SLOTTED BIND HD #6-32×.31	9006021-4	10
24	FASTON TAB	9007113	9
24	EYELET	9009000-00	8
30	SCR, PHL HD, POZI DRIVE 8-32×.62	9006120-6	7
3	SPACER, BACK PLANE	E-MD-7411399-3-0	6
~~5~~	~~GND PLANE PROTECTION SHT~~	~~D-UA-5410681-0-0~~	~~5~~
1	ETCH CIRCUIT BOARD	5010659	4
3	BAR, BACK PLANE (CPU)	C-MD-7411943-0-0	3
6	CONN BLOCK, 72 PIN	D-PS-1211425-0-0	2
12	2BG PIN CONN BLOCK (HBG3)	E-SC-1210258-01	1
QTY.	DESCRIPTION	PART NO.	ITEM NO.

PARTS LIST

FIRST USED ON OPTION/MODEL: KL10

UNLESS OTHERWISE SPECIFIED

SEE PARTS LIST

NEXT HIGHER ASSY: E-AD-7009438-0-0

SCALE 1/1

SHEET 1 OF 1

EQUIPMENT CORPORATION

TITLE: CPU 2 BACK PLANE ASSY

E AD 7009415-0 TO

REV C

REV	REVISION	DATE	BY
A	[illegible]	[illegible]	J. PROVIDENT
B	[illegible]	[illegible]	[illegible]
C	[illegible]	[illegible]	D. CHIN

KL10-00011

571

"THIS DRAWING AND SPECIFICATIONS, HEREIN, ARE THE PROPERTY OF DIGITAL EQUIPMENT CORPORATION AND SHALL NOT BE REPRODUCED OR COPIED OR USED IN WHOLE OR IN PART AS THE BASIS FOR THE MANUFACTURE OR SALE OF ITEMS WITHOUT WRITTEN PERMISSION.
COPYRIGHT © 1976 DIGITAL EQUIPMENT CORPORATION"

NOTES: 1. FOR DRAWING DIRECTORY REFER TO: B-DD-5410680-0.
2. SHEET 2 THRU SHEET 5 ARE "E" SIZE.

QTY	REF. DESIGNATION	DESCRIPTION	PART NO.	ITEM NO.
1		ETCHED CIRCUIT BOARD	5010659	1
24		TAB, DOUBLE	9007113	2
24		EYELET	9006732	3

PARTS LIST

FIRST USED ON OPTION MODEL: KLIØ

ETCH ~~BOARD REV~~

IC TYPE	GND	+5V
GND AND 5V ARE USUALLY PIN 7 AND 14 RESPECTIVELY EXCEPTIONS ARE STATED ABOVE		

IC PIN LOCATIONS

DEC NO.	EIA NO.	DEC NO.	EIA NO.

SEMICONDUCTOR CONVERSION CHART

REVISIONS: REV. A — CHANGE NO. 00001 — CHK. Bert G. Hunt 4-4-77 — D. LITWINETZ 11-APR-77

DRN. K. Samache DATE 6 Dec 76
CHK'D. DATE 23 Feb 77
ENG. DATE 23 Feb 77
PROJ. ENG. DATE 23 Feb 77
PROD. W. Conley DATE 25 Feb 77

NEXT HIGHER ASSY: B-DD-5410680-0

SCALE —
SHEET 1 OF 5

digital

TITLE: BACKPANEL CPU #2

SIZE D | CODE UA | NUMBER 5410680-0-0 | REV. A

DIST.

MR

552

DEC FORM NO. 160 135.2

5-13

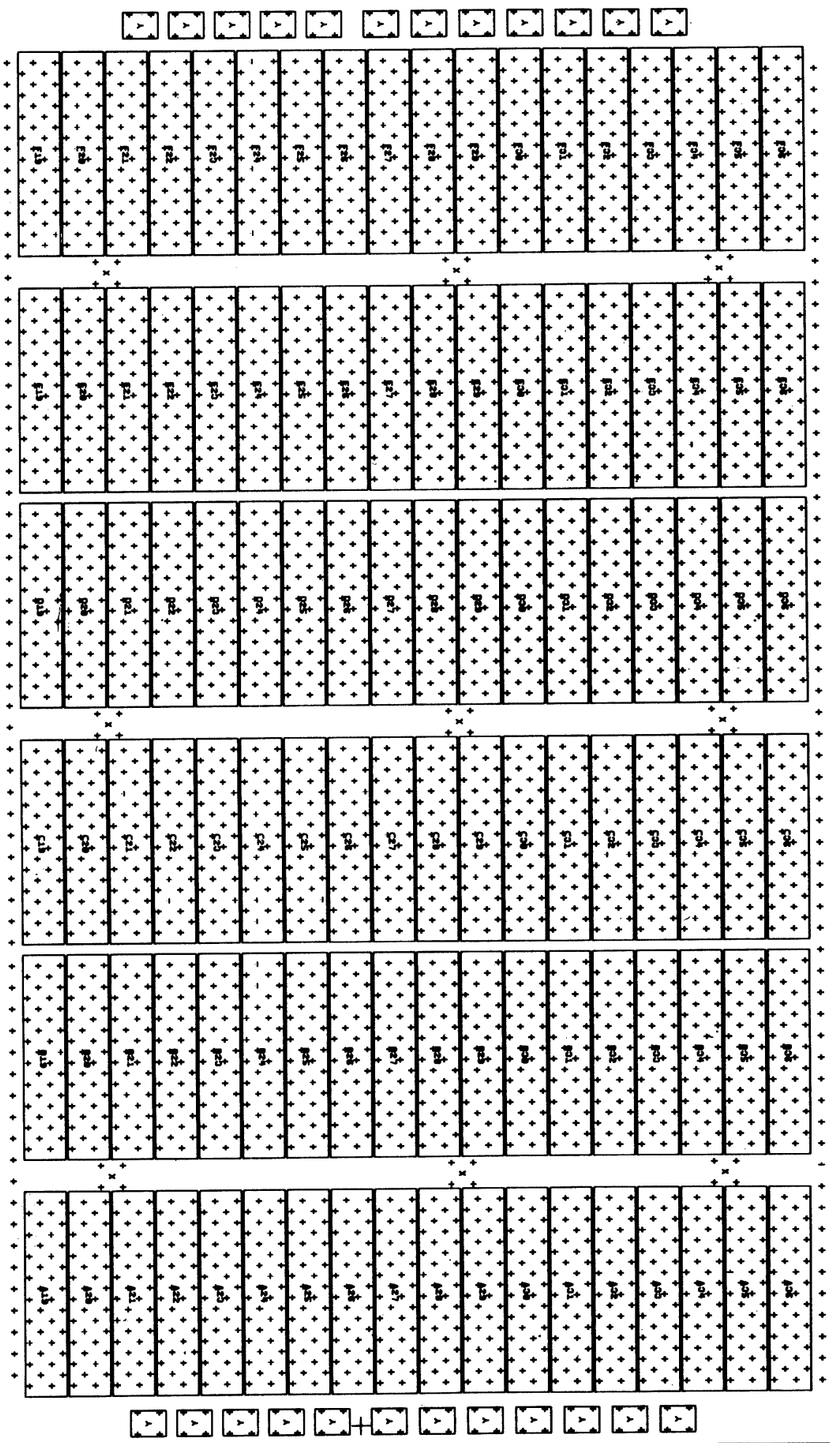

NOTES:

SIGNATURES	DATE
DRN.	
CHK.	
ENG.	
PROJ. ENG.	
PROD.	
SCALE 2/1	
SHT. 2 OF 5	
NEXT HIGHER ASSY.	

digital

TITLE BACKPANEL CPU #2

SIZE A NUMBER 54106680-0-0 REV A

ETCH REV. 0-F2

P/C DESIGN DATA BASE REV. 0-F2

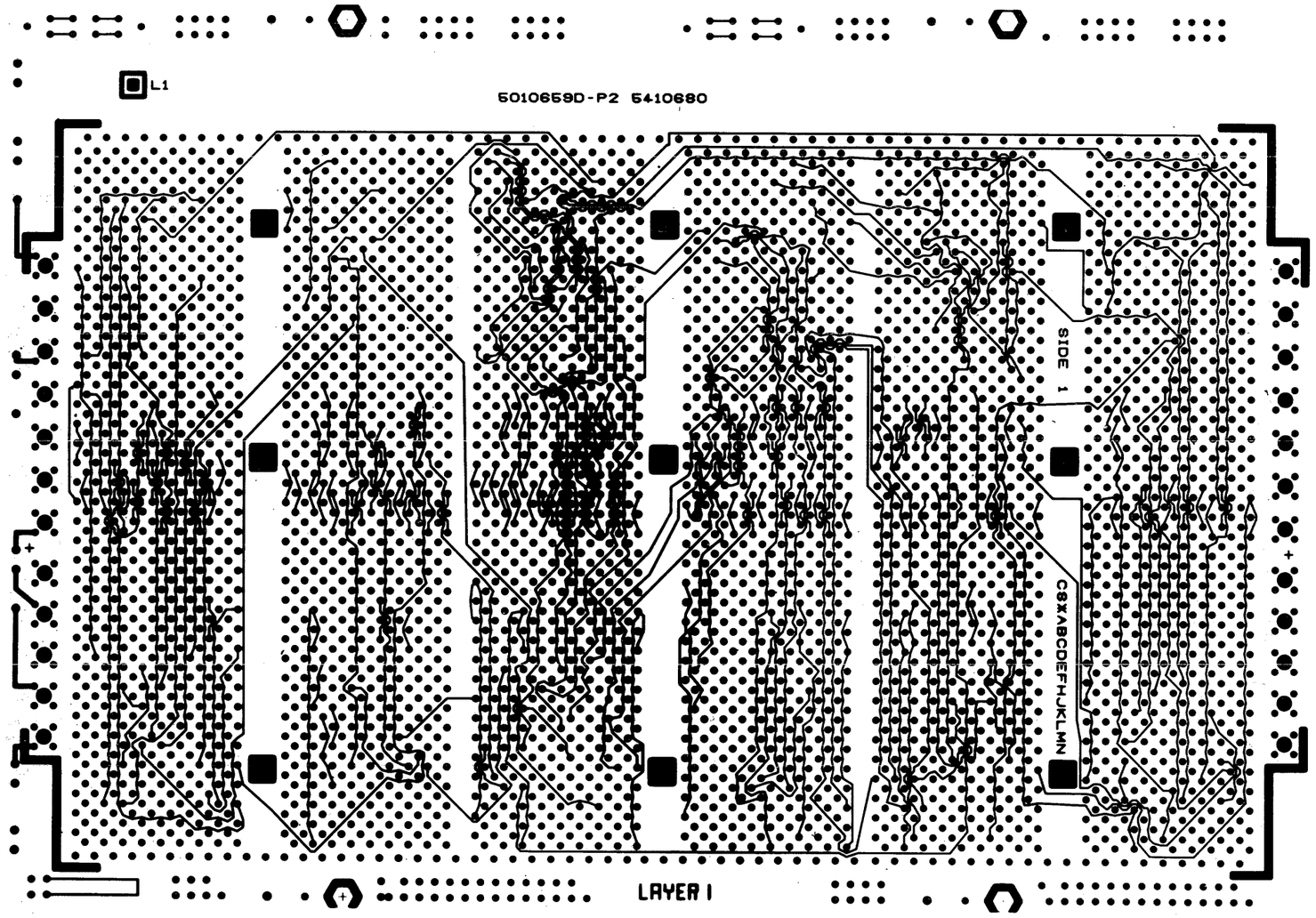

BACKPANEL CPU #2

UA5410680-0-0

A

574

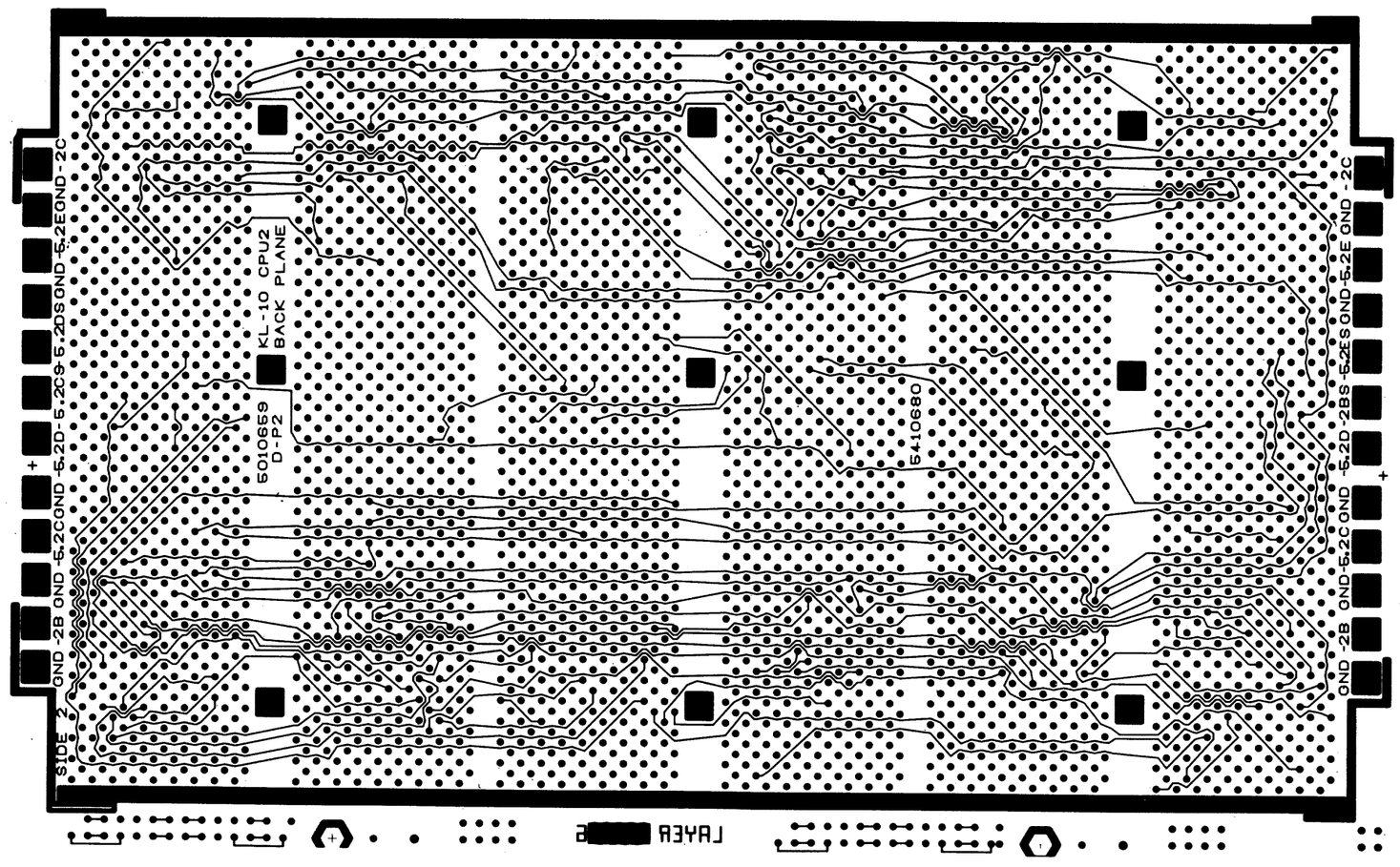

TITLE	BACKPANEL CPU #2
SCALE 2/1	SHEET 4 OF 5
DOCUMENT NUMBER	E UA5410680-0-0
REV.	A

575

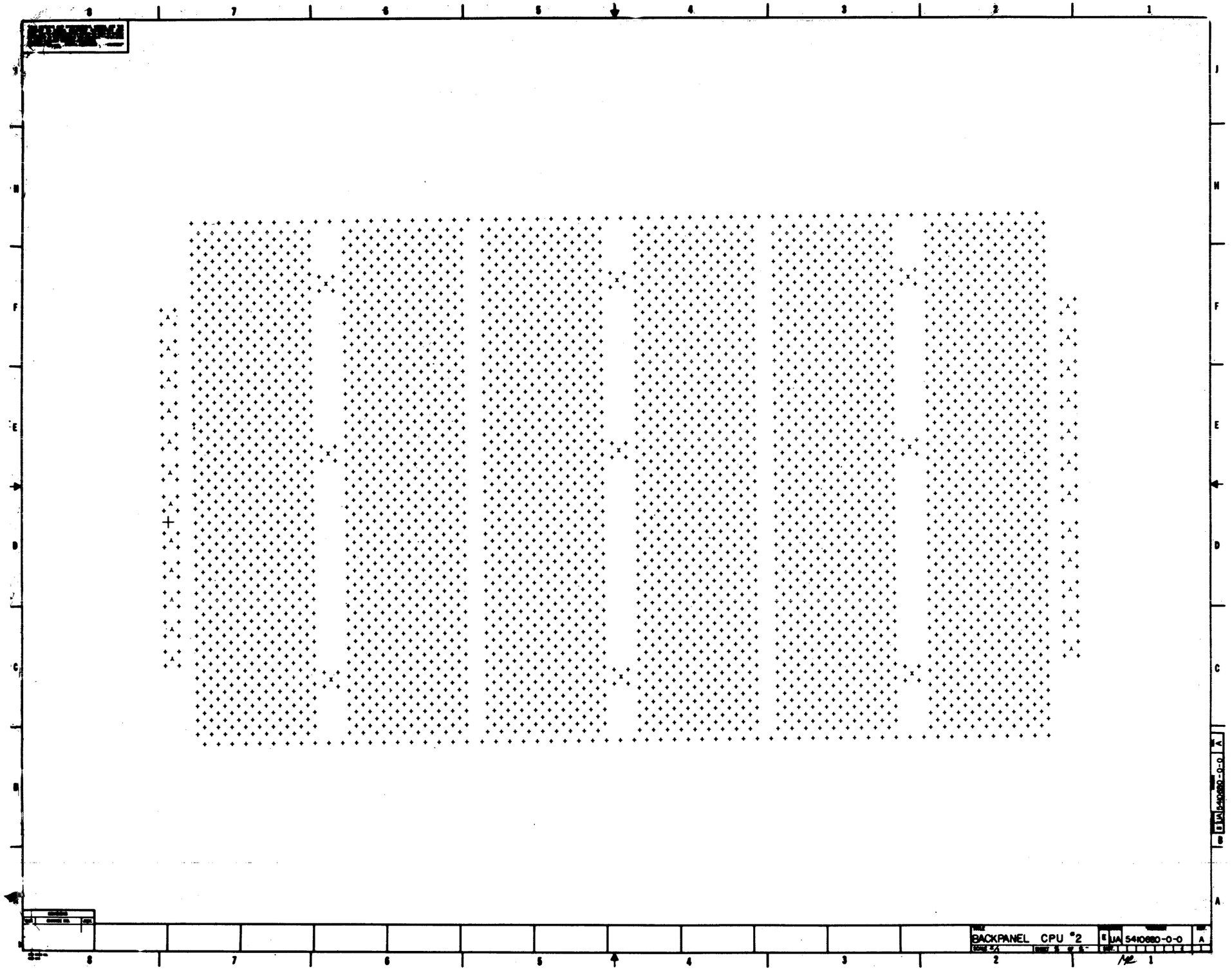

576

DO NOT SCALE DRAWING

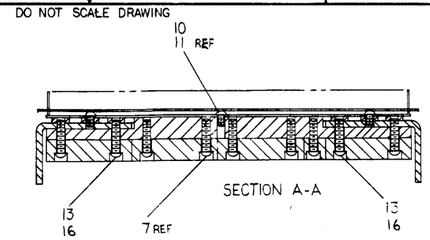

NOTES:

~~1. CUT ITEM "5" TO LENGTH GIVEN IN DETAIL A. GROUND PLANE PROTECTION SHEETS SHOULD BE TAPED TOGETHER AS SHOWN WITH (ITEM "14") 2 PLACES.~~

2. BEFORE ASSY OF ITEM "4 (BOARD) REWORK PER D-UA-5410481-0-0.
3. FOR ASSY AID REFER TO PROCESS SHEET A-SP-KLIØ-SP5

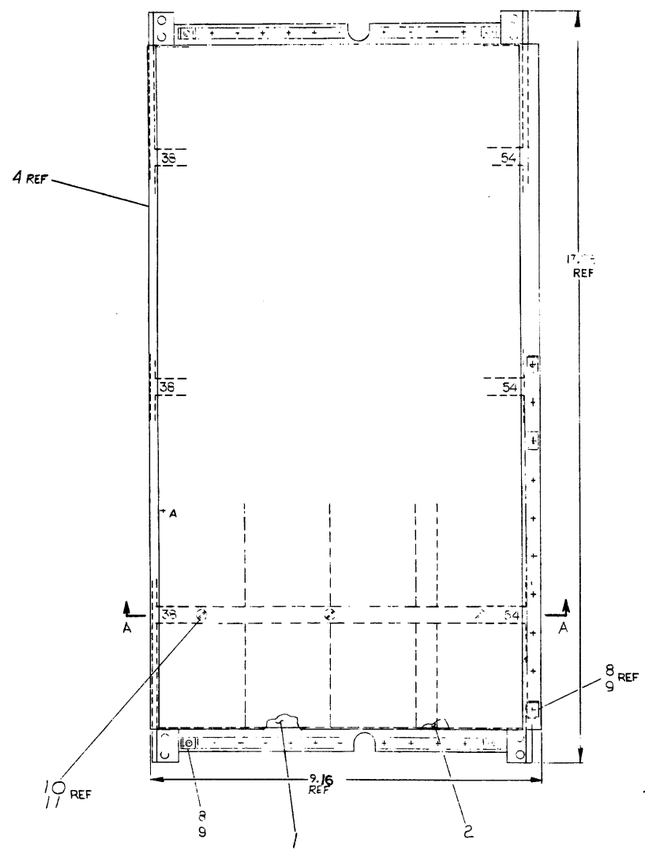

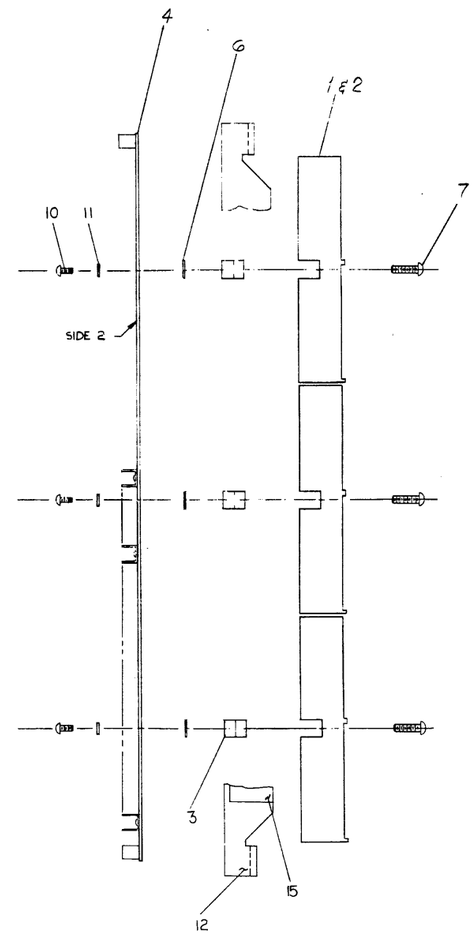

12	WASHER, LOCK #8	9006690	16
1	LABEL, ADHESIVE BACK	9009255	15
~~AR~~	~~TAPE, TRANSPARENT 25W~~	~~9009647~~	~~14~~
12	SCR, PHL FIL HD #8-32 x .81	9009664-6	13
2	BRACKET LOGIC FRAME	D-1A-7412900-0-0	12
9	WASHER, LOCK INT TOOTH #6	9006633	11
9	SCR, SLOTTED BIND HD #6-32 x .31	9006027-4	10
34	FASTSH #8	9007113	9
34	EYELET	9009000-00	8
27	SCR, FIL HD POZI DRIVE #8-32 x .62	9006120-8	7
3	SPACER, BACK PLANE	C-MD-7411393-2-0	6
~~3~~	~~GND PLANE PROTECTION SHT~~	~~C-MD-5411286-0-0~~	~~5~~
1	ETCH CIRCUIT BOARD	5010660	4
3	BAR, BACK PLANE (CPU)	C-MD-7411944-0-0	3
3	CONN BLOCK, 72 PIN	D-PS-1211425-0-0	2
12	288 PIN CONN BLOCK (H863)	E-SC-1210258-01	1
QTY.	DESCRIPTION	PART NO.	ITEM NO.

PARTS LIST

FIRST USED ON OPT/MOD: KLIØ

UNLESS OTHERWISE SPECIFIED DIMENSIONS IN INCHES TOLERANCES FRACTIONS ±1/64 ANGLES ±1/2° DECIMALS ±.005 ±.010 ±.030 FINISH, DEBURRING QUALITY, BREAKING SHARP EDGES

MATERIAL: SEE PARTS LIST

FINISH:

NEXT HIGHER ASSY: E-AD-7009438-0-0

SCALE 1/1 SHEET 1 OF 1

EQUIPMENT CORPORATION

TITLE: CPU #3 BACK PLANE ASSY

SIZE E | CODE IDENT AD | DWG NO. 7009416-0-0 | REV D

ZONE	REVISION REQ.	REVISE NO.	REV.
2F	7009416-0000	A	
1F	KLIØ-00017	B	
2D	7009416-0000	C	
2E	7009416-0000	D	

J. PROVENT 11 MAR 77
J. HACKENBERG 21 Mar 77
J. HACKENBERG 2 JUN 77
K. KLIØ - PV - MROOS 27 Oct 78
D. CHIN 10 Nov 78

577

"THIS DRAWING AND SPECIFICATIONS, HEREIN, ARE THE PROPERTY OF DIGITAL EQUIPMENT CORPORATION AND SHALL NOT BE REPRODUCED OR COPIED OR USED IN WHOLE OR IN PART AS THE BASIS FOR THE MANUFACTURE OR SALE OF ITEMS WITHOUT WRITTEN PERMISSION.
COPYRIGHT © 1976 DIGITAL EQUIPMENT CORPORATION"

NOTES:

1. FOR DRAWING DIRECTORY REFER TO: B-DD-5410681-0.
2. CAUTION SHEETS 2 THRU 5 ARE "E" SIZE.

QTY	REF. DESIGNATION	DESCRIPTION	PART NO.	ITEM NO.
1		ETCHED CIRCUIT BOARD	5010660	1
34		TAB DOUBLE	9007113	2
34		EYELET	9006732	3

PARTS LIST

IC TYPE	GND	+5V

GND AND 5V ARE USUALLY PIN 7 AND 14 RESPECTIVELY EXCEPT WHERE STATED ABOVE

IC PIN LOCATIONS

FIRST USED ON OPTION MODEL: KL10

ETCH ~~BOARD REV~~

ORIG	CHANGE NO.	REV.
CHK		

REVISIONS

DEC NO.	EIA NO.	DEC NO.	EIA NO.

SEMICONDUCTOR CONVERSION CHART

DRN. M. Pascarelli DATE 17-SEP-76
CHK'D. DATE 22-NOV-77
ENG. DATE 23-FEB-77
PROJ. ENG. DATE 23-FEB-77
PROD. DATE 23-FEB-77

NEXT HIGHER ASSY: B-DD-5410681-0

SCALE: —/—

SHEET 1 OF 5

digital

TITLE: BACKPANEL CPU #3

SIZE	CODE	NUMBER	REV.
D	UA	5410681-0-0	A

DIST.

DEC FORM NO. DND 138.8

MR

578

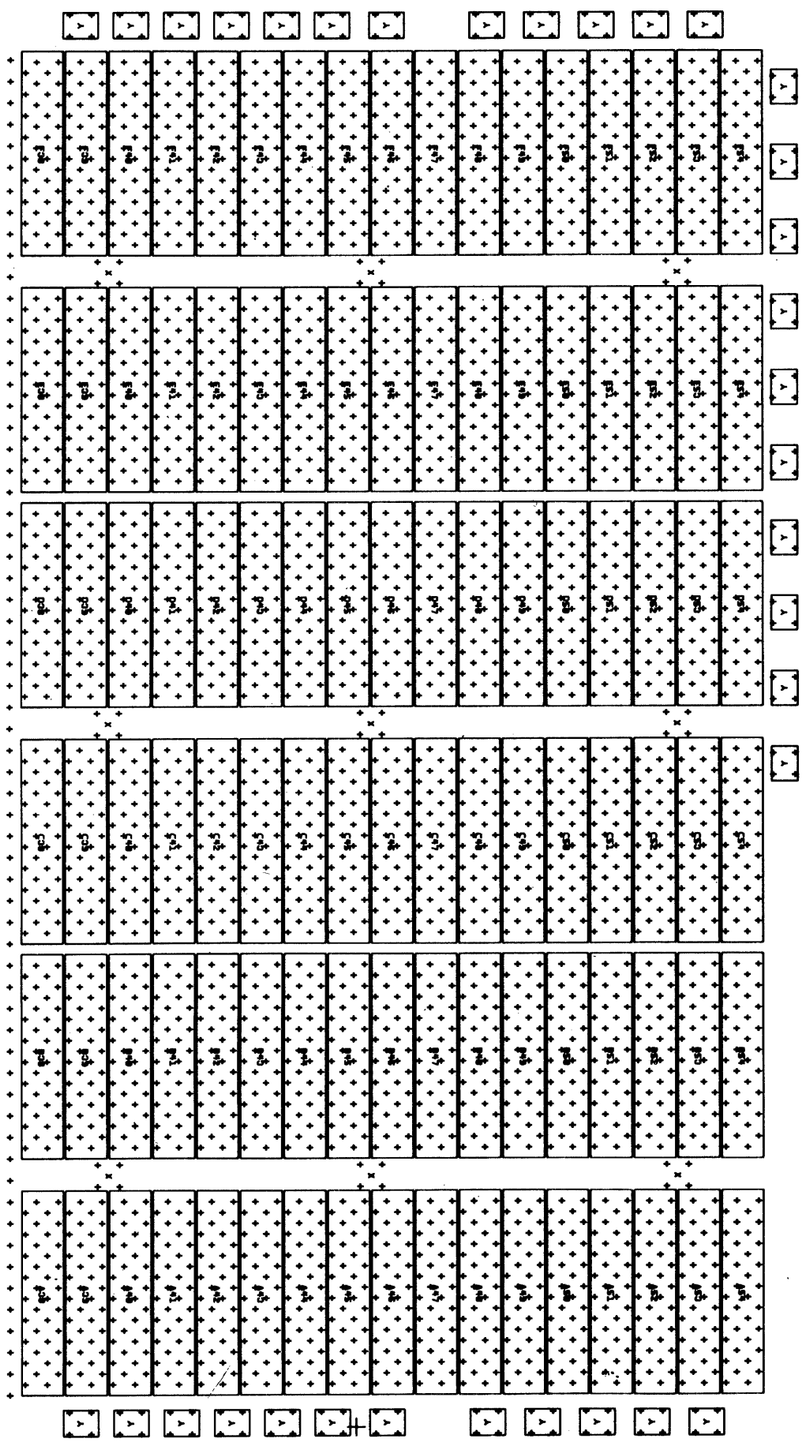

NOTES:

digital

TITLE BACKPANEL CPU #3

SIZE MA 5410681-0-01 A

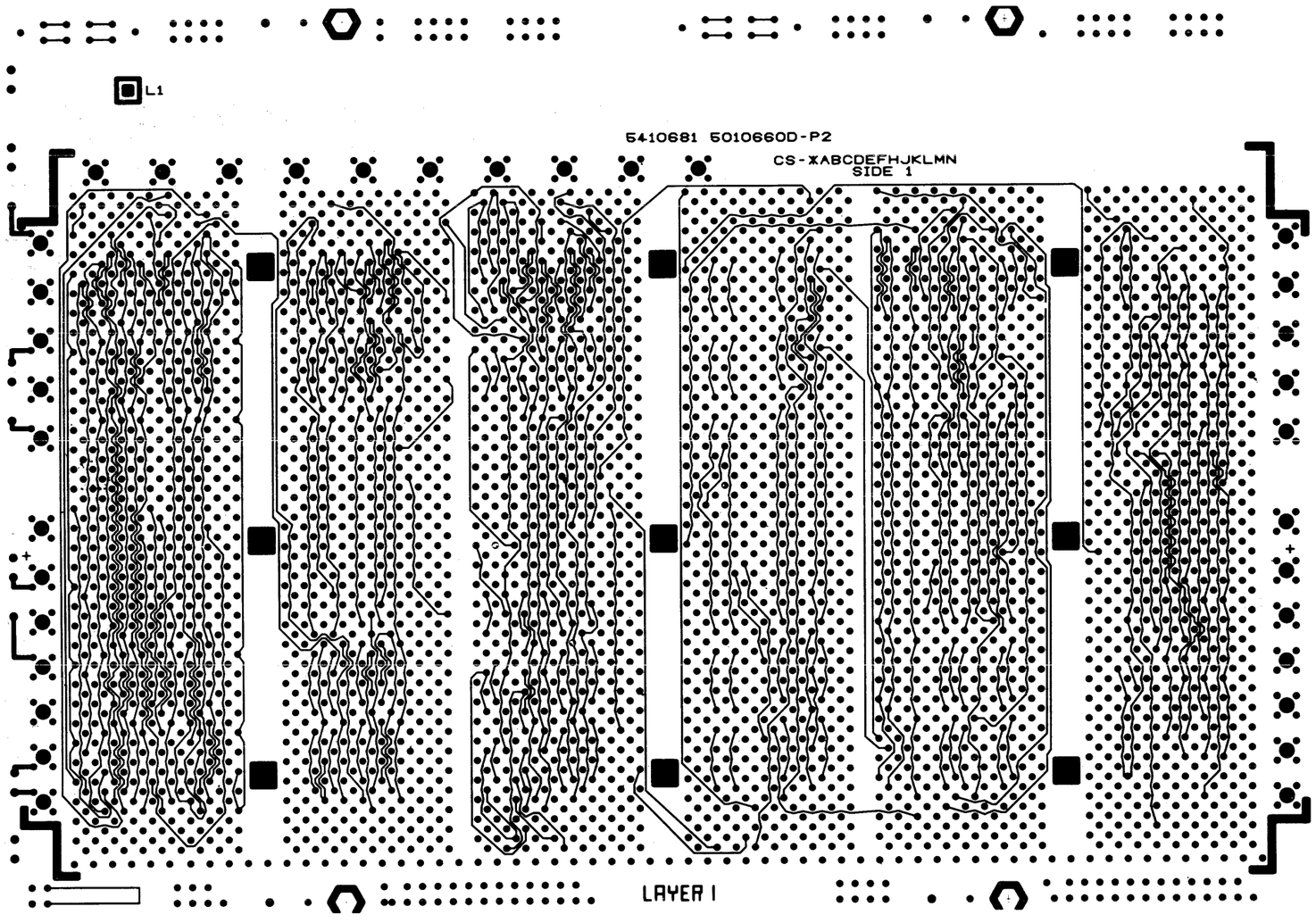

TITLE BACKPLANE CPU #3	E LA	5410681-0-0	REV A
SCALE 2/1	SHEET 3 OF 5		

5410681-0-0 A

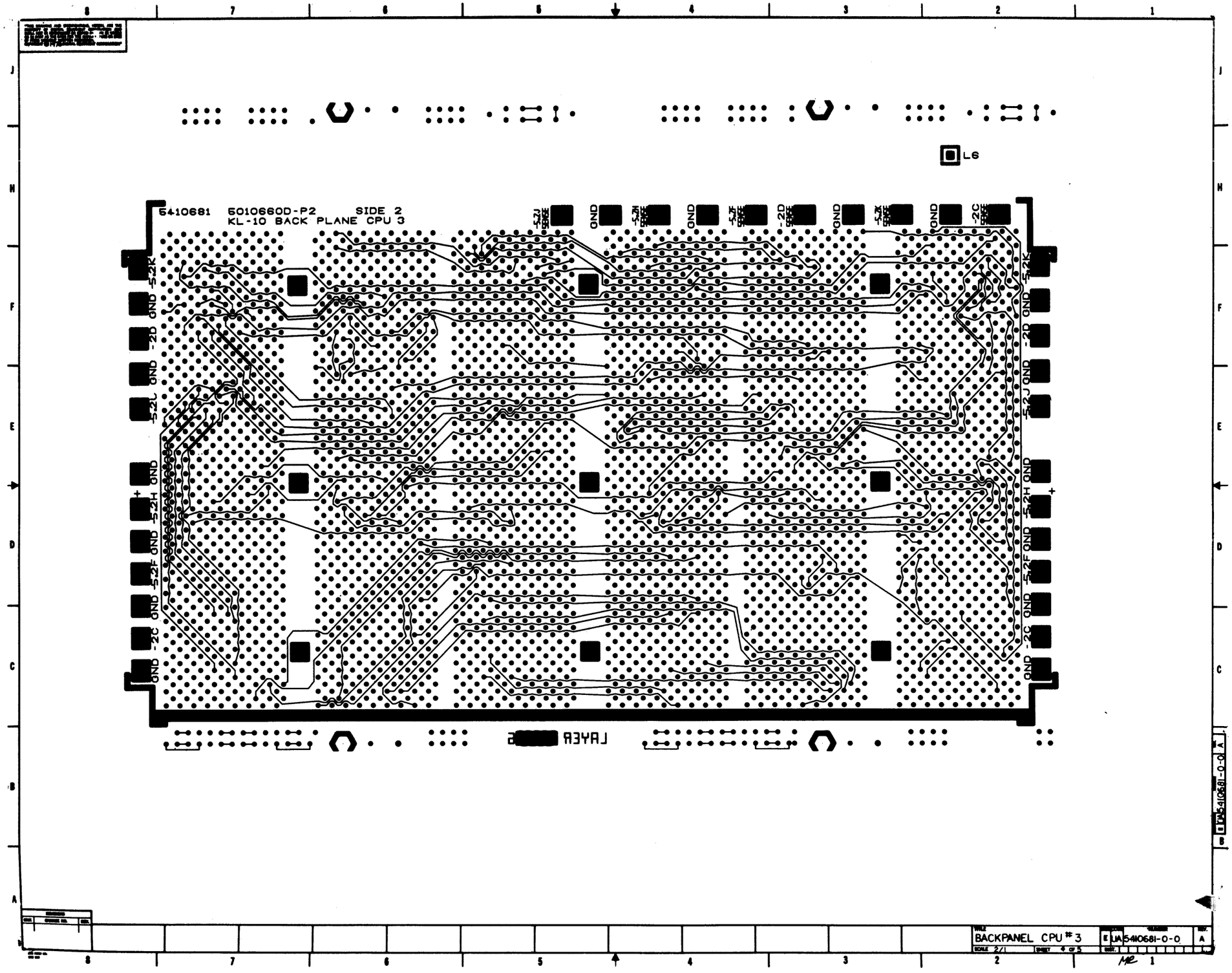
6410681 6010660D-P2 SIDE 2
KL-10 BACK PLANE CPU 3
LAYER 2
L6
-5.2K GND -2D GND -5.2L GND -5.2H GND -5.2F GND -2C GND
-5.2J GND -2D GND -5.2K GND -5.2H GND -5.2F GND -2C GND
-5.2J SENSE GND -5.2M SENSE GND -5.2F SENSE -2D SENSE GND -5.2X SENSE GND -2C SENSE
BACKPANEL CPU #3
UA5410681-0-0
A

185

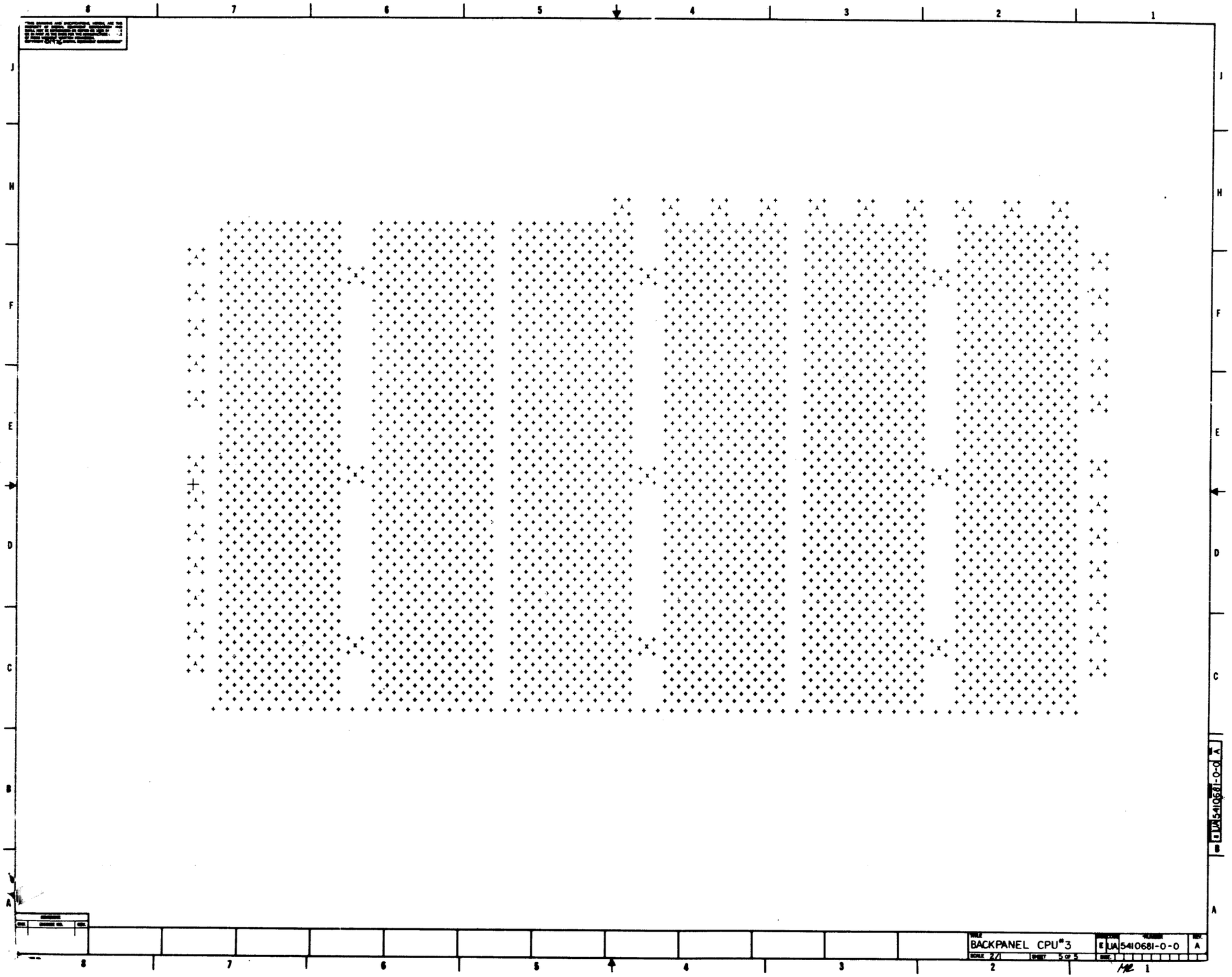
BACKPANEL CPU#3
SCALE 2/1
SHEET 5 OF 5
UA5410681-0-0
A
UA5410681-0-0 A

582