"THIS DRAWING AND SPECIFICATIONS, HEREIN, ARE THE PROPERTY OF DIGITAL EQUIPMENT CORPORATION AND SHALL NOT BE REPRODUCED OR COPIED OR USED IN WHOLE OR IN PART AS THE BASIS FOR THE MANUFACTURE OR SALE OF ITEMS WITHOUT WRITTEN PERMISSION. COPYRIGHT © 1975 DIGITAL EQUIPMENT CORPORATION"

NOTES:

1. ITEMS NOT SHOWN WITH AN ASTERISK ARE PART OF DTE2Ø LOGIC ASSY E-AD-7010101-0-0

	4	5	6	7	8
H		BC11A **	BC11A **		
J		(M929)	(M929)	(M8564)	

	1	2	3	4	5	6	7	8	9	10
A	** M92Ø									BC11A **
B		M8559	SPARE	M8553 *	M8552 *	SPARE	SPARE	SPARE	SPARE	(M929)
C	** M92Ø									BC2ØC **
D										(M9006)
E	SPARE		M8554 *							BC2ØC **
F										(M9006)

REF. PIN SIDE

* DTE2Ø MODULE SET LOCATION NOT SUPPLIED AS PART OF E-AD-7010101-0-0

** NOT SUPPLIED AS PART OF E-AD-7010101-0-0 SEE D-UA-KLIØ-0-0

REVISIONS			
CHK	CHANGE NO.	REV.	
	KLIØ-00002	A	

J. PROVIDENT

FIRST USED ON OPTION/MODEL	QTY.	DESCRIPTION	PART NO.	ITEM NO.
KLIØ		PARTS LIST		

DIMENSIONAL TOLERANCE

DIMENSIONS ARE ~~MILLIMETERS~~ INCHES UNLESS OTHERWISE SPECIFIED

MILLIMETERS	INCHES	ANGLES
X.XX = ±0.10	.XXX = ±.005	±0° 30'
X.X = ±0.5	.XX = ±.02	
X = ±2,	.X = ±.1	

THIRD ANGLE PROJECTION

REMOVE BURRS AND BREAK SHARP CORNERS SURFACE QUALITY ✓

MATERIAL —//—

FINISH —//—

		DATE
DRN.	M. Gaches	2-27-75
CHK'D		3-6-75
ENG.	J. Provident	3-26-75
PROJ. ENG.	J. Provident	3-26-75
PROD.		3-26-75

NEXT HIGHER ASSY. D-UA-KLIØ-Ø-Ø

SCALE —//—

SHEET 1 OF 1

digital

TITLE MODULE UTILIZATION DTE2Ø

SIZE	CODE	NUMBER	REV.
C	MU	KLIØ-Ø-DTE1	A

DIST.

DEC FORM NO. DRC 100-B

405

"THIS DRAWING AND SPECIFICATIONS, HEREIN, ARE THE PROPERTY OF DIGITAL EQUIPMENT CORPORATION AND SHALL NOT BE REPRODUCED OR COPIED OR USED IN WHOLE OR IN PART AS THE BASIS FOR THE MANUFACTURE OR SALE OF ITEMS WITHOUT WRITTEN PERMISSION. COPYRIGHT © 1975, DIGITAL EQUIPMENT CORPORATION"

NOTES:

1. ITEM NOT SHOWN WITH AN ASTERISK ARE PART OF RH2Ø/DTE2Ø LOGIC ASSY E-AD-7010102-0-0

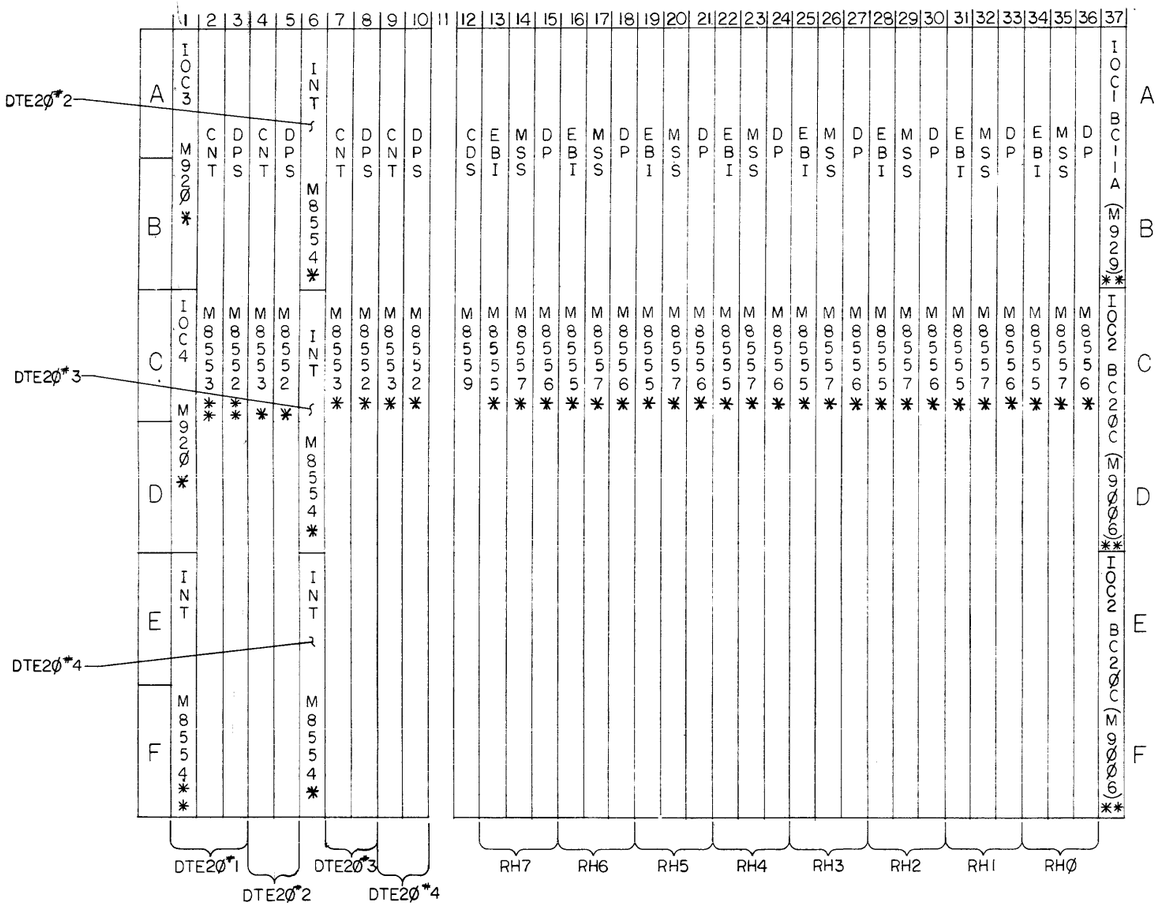

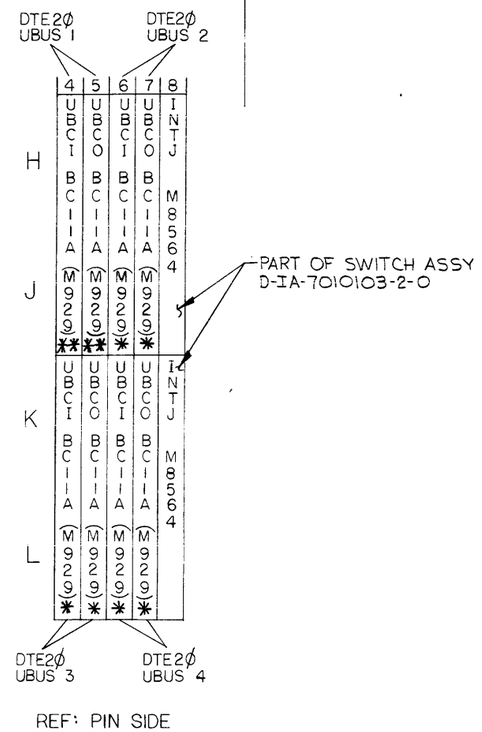

REF: PIN SIDE

REF: PIN SIDE

* INSTALLED AT SYSTEMS LEVEL

** INSTALLED AT KLIØ UNIT ASSY LEVEL D-UA-KLIØ-Ø-Ø

QUANTITY & VARIATION	DESCRIPTION	DWG./PART NO.	ITEM NO.

UNLESS OTHERWISE SPECIFIED DIMENSIONS ARE IN INCHES

ANGLES ±0° 30'	CLASS OF ACCURACY (CHECK ONE)	NOMINAL DIMENSION RANGE INCHES: OVER 0 TO 0.2	OVER 0.2 TO 1.2	OVER 1.2 TO 4.0	OVER 4.0 TO 12.0	OVER 12.0 TO 40.0	OVER 40.0 TO 80.0
SURFACE QUALITY IN ✓ MICROINCHES	MEDIUM ☐	±.004	±.008	±.012	±.016	±.024	±.04
	PREFERRED ☐	±.012	±.016	±.026	±.04	±.063	±0.1

THIRD ANGLE PROJECTION

REMOVE BURRS AND BREAK SHARP CORNERS

DO NOT SCALE DWG

MATERIAL —//—

FINISH —//—

DRN. M. Gaglia 3-11-75
CHK'D 3-25-75
ENG. 3-25-75
PROJ. ENG. 3-26-75
PROD. 3-26-75

NEXT HIGHER ASSY. E-UA-KLIØ-Ø-Ø

SCALE —//—

SHEET 1 OF 1

FIRST USED ON KLIØ digital

TITLE MODULE UTILIZATION RH2Ø-DTE2Ø

SIZE D CODE MU NUMBER KLIØ-Ø-RHDT REV.

DIST.

REVISIONS: REV. / CHANGE NO. / CHK

DEC FORM NO. DRD 100-C

406

mR

REVISION CONTROL SHEET

CUSTOMER PRINT SET	MFG SET	DRAWING NO	NO OF SHT	DESCRIPTION	OPTION NO/FILE DATE	A	B	C	D	E	F
			-	MODULE REVISION		A	B	C	D	E	F
		D-UA-M8552-Ø-Ø	5	10/11 DATA PATH		-	A	B	C	D	D1
		D-CS-M8552-Ø-DPS1	1	DATA PATH AND STATUS		-	–	A	A	B	B1
		D-CS-M8552-Ø-DPS2	1	DATA PATH AND STATUS		-	–	A	A	A	A1
		D-CS-M8552-Ø-DPS3	1	DATA PATH AND STATUS		-	–	A	A	A	A1
		D-CS-M8552-Ø-DPS4	1	DATA PATH AND STATUS		-	–	A	A	A	A1
		D-CS-M8552-Ø-DPS5	1	DATA PATH AND STATUS		-	–	A	B	C	C1
		D-CS-M8552-Ø-DPS6	1	DATA PATH AND STATUS		-	–	A	A	A	A1
		D-CS-M8552-Ø-DPS7	1	DATA PATH AND STATUS		-	–	A	B	C	C1
		D-CS-M8552-Ø-DPS8	1	DATA PATH AND STATUS, PWR, CAP + GND		-	A	B	B	C	C1
		K-CO-M8552-Ø-4	1	10/11 DATA PATH		B	B	B	B	B	B
		D-AH-M8552-Ø-5	4	10/11 DATA PATH		A	A	A	A	A	A
		B-MH-M8552-Ø-6	1	MODULE ECO HISTORY		REF	-	-	-	-	-
		5010516		ETCH CIRCUIT BOARD		B	B	B	B	B	B
		P00-M8552-ØØ		PROCESS SHEET (REF ONLY)		-	-	-	-	-	-

REVISIONS

ECO NO	ORIG.	00001	00002	00003	00004	00005
						REWORK VERSION
						RELAYOUT VERSION SEE SHEET 3

CUSTOMER PRINT SET CODES
X = PRINT OF DOCUMENT INCLUDED IN PRINT SET
C = INCLUDES ALL PRINTS INDICATED ON DOCUMENT
S = CONFIDENTIAL AUTHORIZED SIGNATURE REQUIRED

TITLE	SHEET	SIZE	CODE	NUMBER	REV
10/11 DATA PATH	SHEET 2 OF 3	B	DD	M8552-Ø	E

407

THIS DRAWING AND SPECIFICATIONS, HEREIN, ARE THE PROPERTY OF DIGITAL EQUIPMENT CORPORATION AND SHALL NOT BE REPRODUCED OR COPIED OR USED IN WHOLE OR IN PART AS THE BASIS FOR THE MANUFACTURE OR SALE OF ITEMS WITHOUT WRITTEN PERMISSION. COPYRIGHT © 1975 DIGITAL EQUIPMENT CORPORATION

REVISIONS		
CHK	CHANGE NO	REV

TITLE	SIZE	CODE	NUMBER	REV.
1Ø/11 DATA PATH	D	UA	M8552-0-0	DI
SCALE 2/1	SHEET 2 OF 5	DIST.		

408

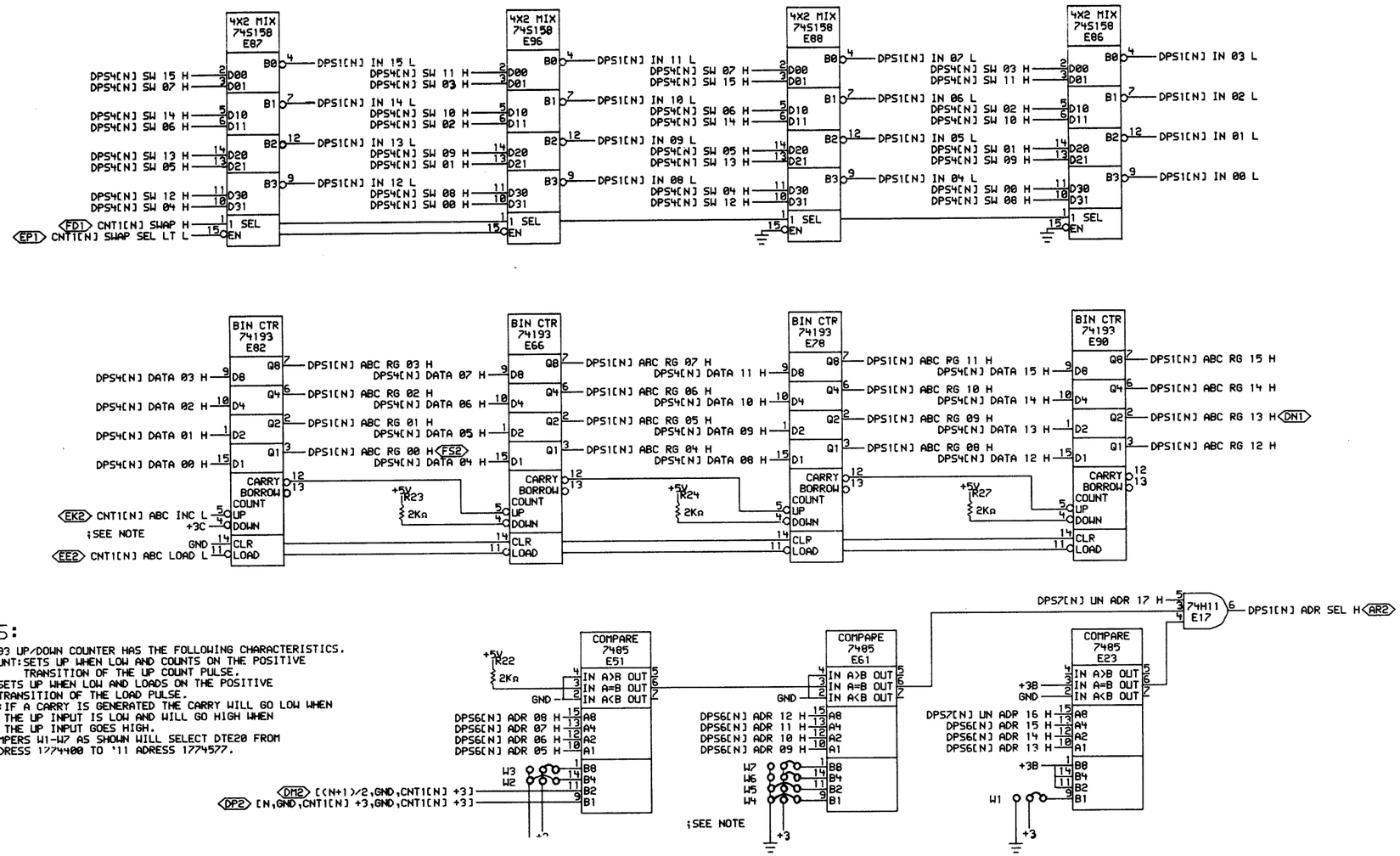

;NOTES:

;THE 74193 UP/DOWN COUNTER HAS THE FOLLOWING CHARACTERISTICS.
UP-COUNT: SETS UP WHEN LOW AND COUNTS ON THE POSITIVE TRANSITION OF THE UP COUNT PULSE.
LOAD: SETS UP WHEN LOW AND LOADS ON THE POSITIVE TRANSITION OF THE LOAD PULSE.
CARRY: IF A CARRY IS GENERATED THE CARRY WILL GO LOW WHEN THE UP INPUT IS LOW AND WILL GO HIGH WHEN THE UP INPUT GOES HIGH.
;WIRE JUMPERS W1-W7 AS SHOWN WILL SELECT DTE20 FROM '11 ADRESS 1774400 TO '11 ADRESS 1774577.

;1 OF 8

"THIS DRAWING AND SPECIFICATIONS, HEREIN, ARE THE PROPERTY OF DIGITAL EQUIPMENT CORPORATION AND SHALL NOT BE REPRODUCED OR COPIED OR USED IN WHOLE OR IN PART AS THE BASIS FOR THE MANUFACTURE OR SALE OF ITEMS WITHOUT WRITTEN PERMISSION.
COPYRIGHT © 1976, DIGITAL EQUIPMENT CORPORATION".

REVISIONS			REVISIONS		
CHK	CHANGE NO.	REV	CHK	CHANGE	REV
-	M8552-00004	B		M8552-00005	B1
	W. BRUCKERT			W. BRUCKERT	

DPS1X.DRW[4,426] 02-JUN-76 11:33
FIRST USED ON OPTION/MODEL: DTE20
DRN: L. Loosley DATE 04-JUN-76
CHK: W. Stephenson DATE 6/8/76
ENG: William Bruckert DATE 21 JUN 76
BOARD LOCATION:
SHEET 1 OF 1
NEXT HIGHER ASSEMBLY: B-DD-M8552-0

TITLE: DATA PATH AND STATUS

SIZE	CODE	NUMBER	REV.
D	CS	M8552-0-DPS1	B1

409

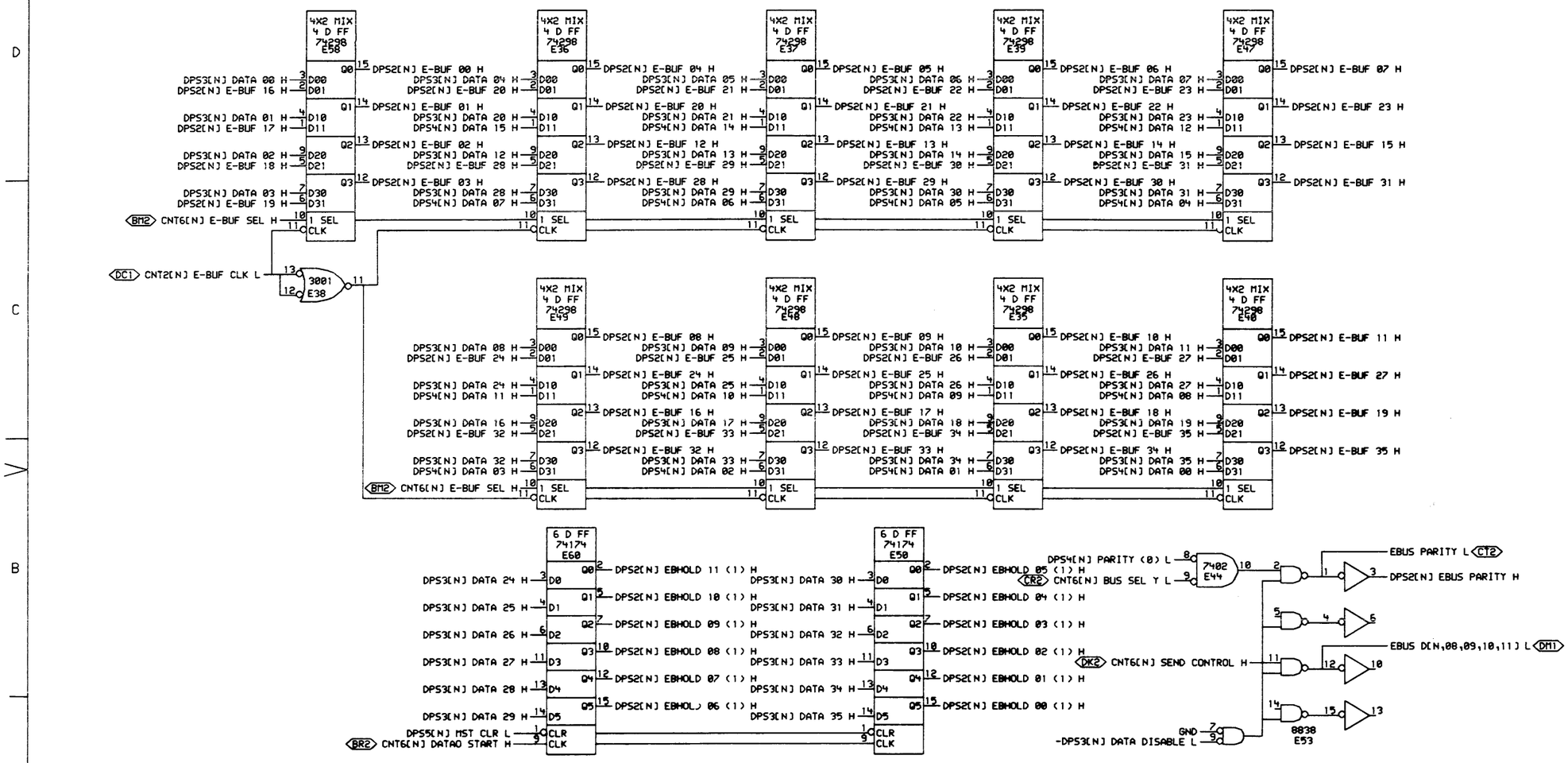

;2 OF 8

"THIS DRAWING AND SPECIFICATIONS, HEREIN, ARE THE PROPERTY OF DIGITAL EQUIPMENT CORPORATION AND SHALL NOT BE REPRODUCED OR COPIED OR USED IN WHOLE OR IN PART AS THE BASIS FOR THE MANUFACTURE OR SALE OF ITEMS WITHOUT WRITTEN PERMISSION. COPYRIGHT © 1975, DIGITAL EQUIPMENT CORPORATION"

REVISIONS			REVISIONS		
CHK	CHANGE NO.	REV	CHK	CHANGE NO	REV
	M8552-00002	A		M8552-00005	A1
	E. Wilson	7/1/75			
	W.BRUCKERT			W. BRUCKERT	

digital

DRW. | DATE 5/23/75 | ENG. | DATE 5/29/75
CHK | DATE 6/23/75 | BOARD LOCATION: | SHEET 1 OF 1

DPS2X[4,426] 21-MAY-75 09:26 | NEXT HIGHER ASSEMBLY: B-DD-M8552-0

FIRST USED ON OPTION/MODEL: DTE20

TITLE: DATA PATH AND STATUS

SIZE	CODE	NUMBER	REV.
D	CS	M8552-0-DPS2	A1

SLOT 3

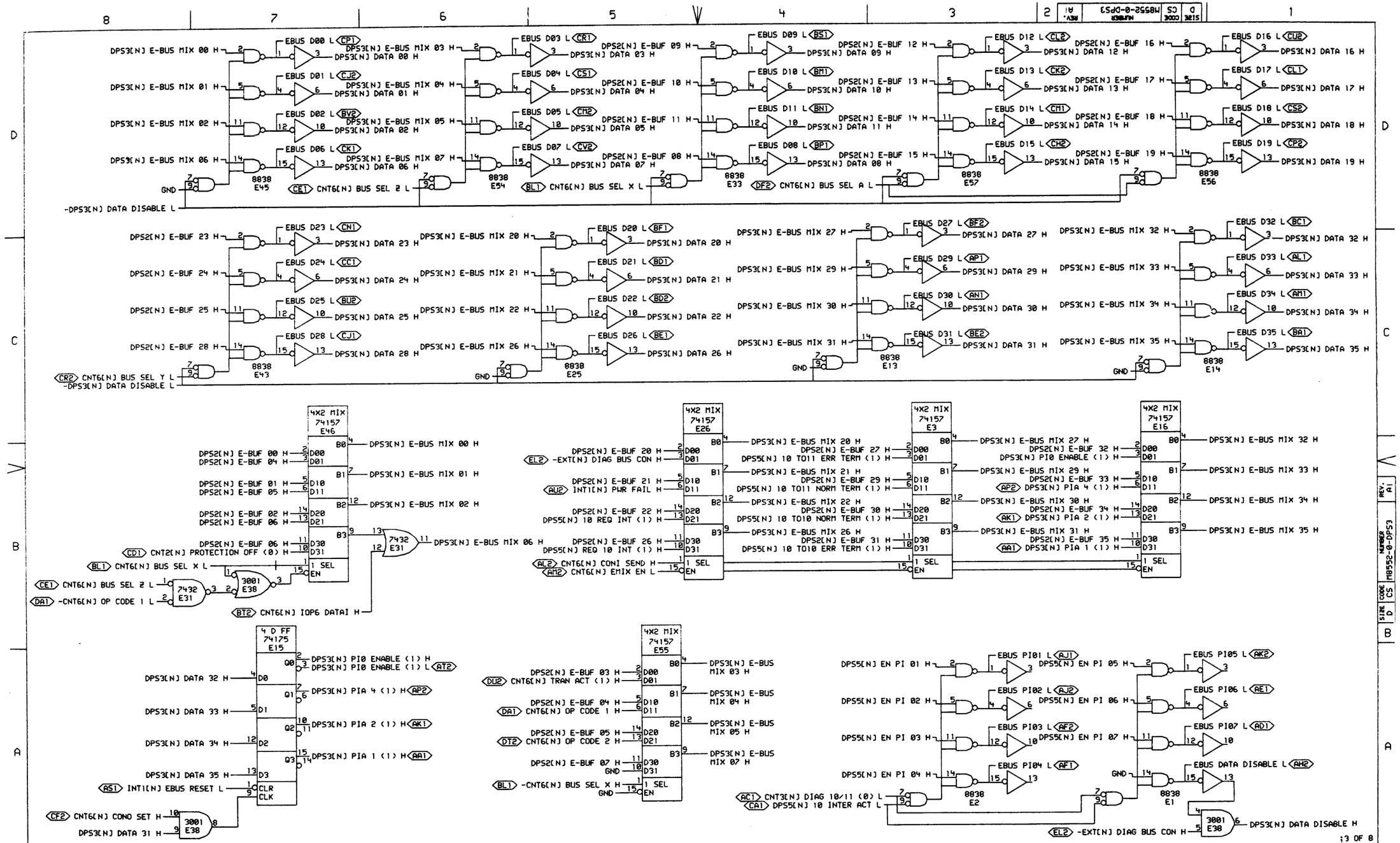

"THIS DRAWING AND SPECIFICATIONS, HEREIN, ARE THE PROPERTY OF DIGITAL EQUIPMENT CORPORATION AND SHALL NOT BE REPRODUCED OR COPIED OR USED IN WHOLE OR IN PART AS THE BASIS FOR THE MANUFACTURE OR SALE OF ITEMS WITHOUT WRITTEN PERMISSION. COPYRIGHT © 1975, DIGITAL EQUIPMENT CORPORATION"

REVISIONS			REVISIONS		
CHK	CHANGE NO.	REV	CHK	CHANGE NO	REV
	M8552-00002	A		M8552-00005	A1
	7/9/75			7/15/77	
W. BRUCKERT			W BRUCKERT		
	8-6-76			12-APR-77	

digital

DRN: W. Stephenson DATE 5/23/75
CHK: W. Stephenson DATE 5/23/75
ENG. DATE 5/29/75
DPS3X(4,426) 24-MAY-75 09:27
BOARD LOCATION:
SHEET 1 OF 1
NEXT HIGHER ASSEMBLY: B-DD-M8552-0
FIRST USED ON OPTION/MODEL: DTE20

TITLE: DATA PATH AND STATUS

SIZE	CODE	NUMBER	REV.
D	CS	M8552-0-DPS3	A1

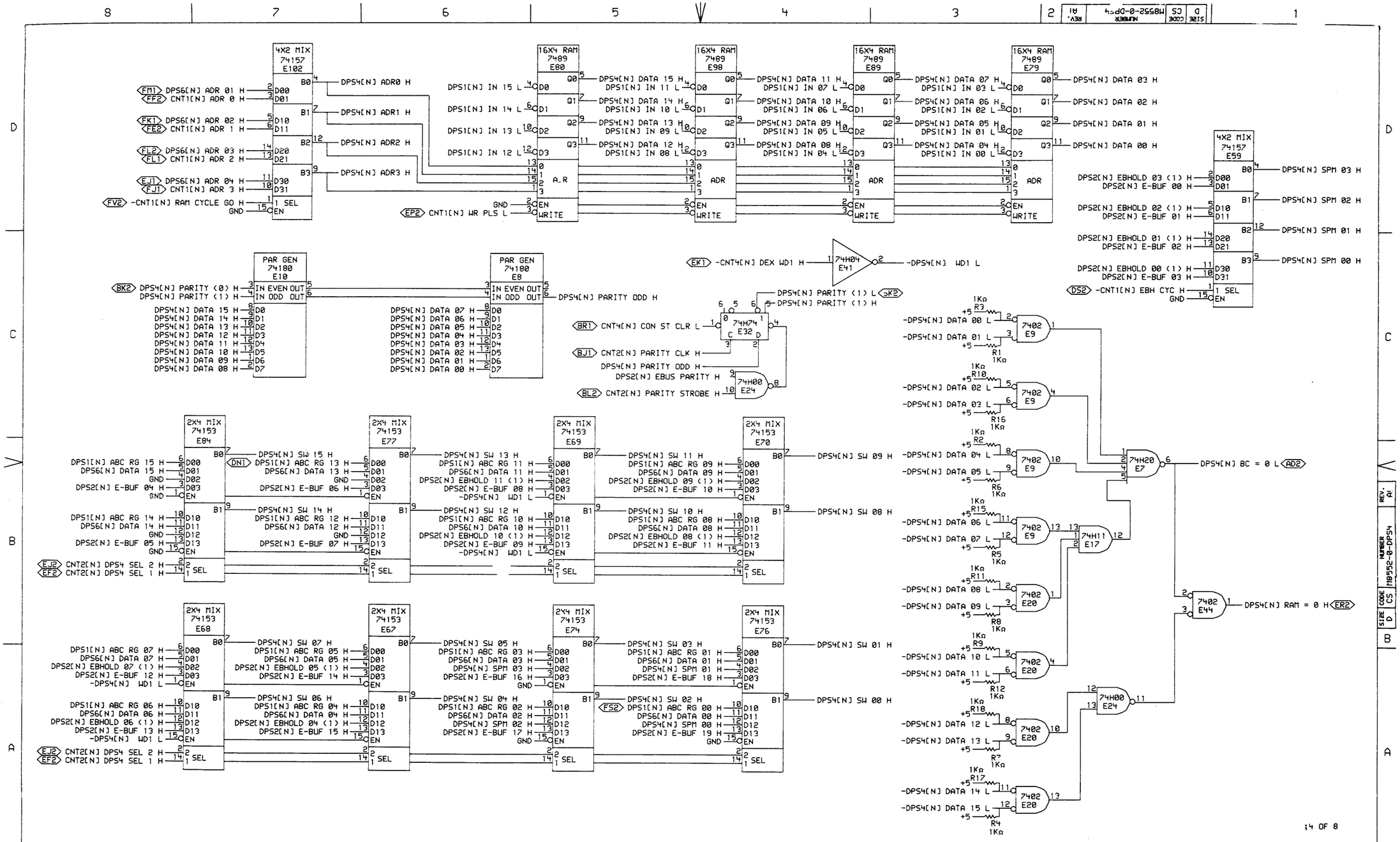

"THIS DRAWING AND SPECIFICATIONS, HEREIN, ARE THE PROPERTY OF DIGITAL EQUIPMENT CORPORATION AND SHALL NOT BE REPRODUCED OR COPIED OR USED IN WHOLE OR IN PART AS THE BASIS FOR THE MANUFACTURE OR SALE OF ITEMS WITHOUT WRITTEN PERMISSION.
COPYRIGHT © 1975, DIGITAL EQUIPMENT CORPORATION"

REVISIONS			REVISIONS		
CHK	CHANGE NO.	REV	CHK	CHANGE NO	REV
	M8552-00002	A		M8552-00005	A1
	7/8/75			9/8/77	
	J.W. BRUCKERT			W. BRUCKERT	

digital

DRN.	DATE 5/23/75	ENG.	DATE 5/29/75
CHK.	DATE 6/22/75	BOARD LOCATION:	
DPS4X(4,426)	21-MAY-75 09:29	SHEET 1 OF 1	
FIRST USED ON OPTION/MODEL: DTE20		NEXT HIGHER ASSEMBLY: B-DD-M8552-0	

TITLE: DATA PATH AND STATUS

SIZE	CODE	NUMBER	REV.
D	CS	M8552-0-DPS4	A1

412

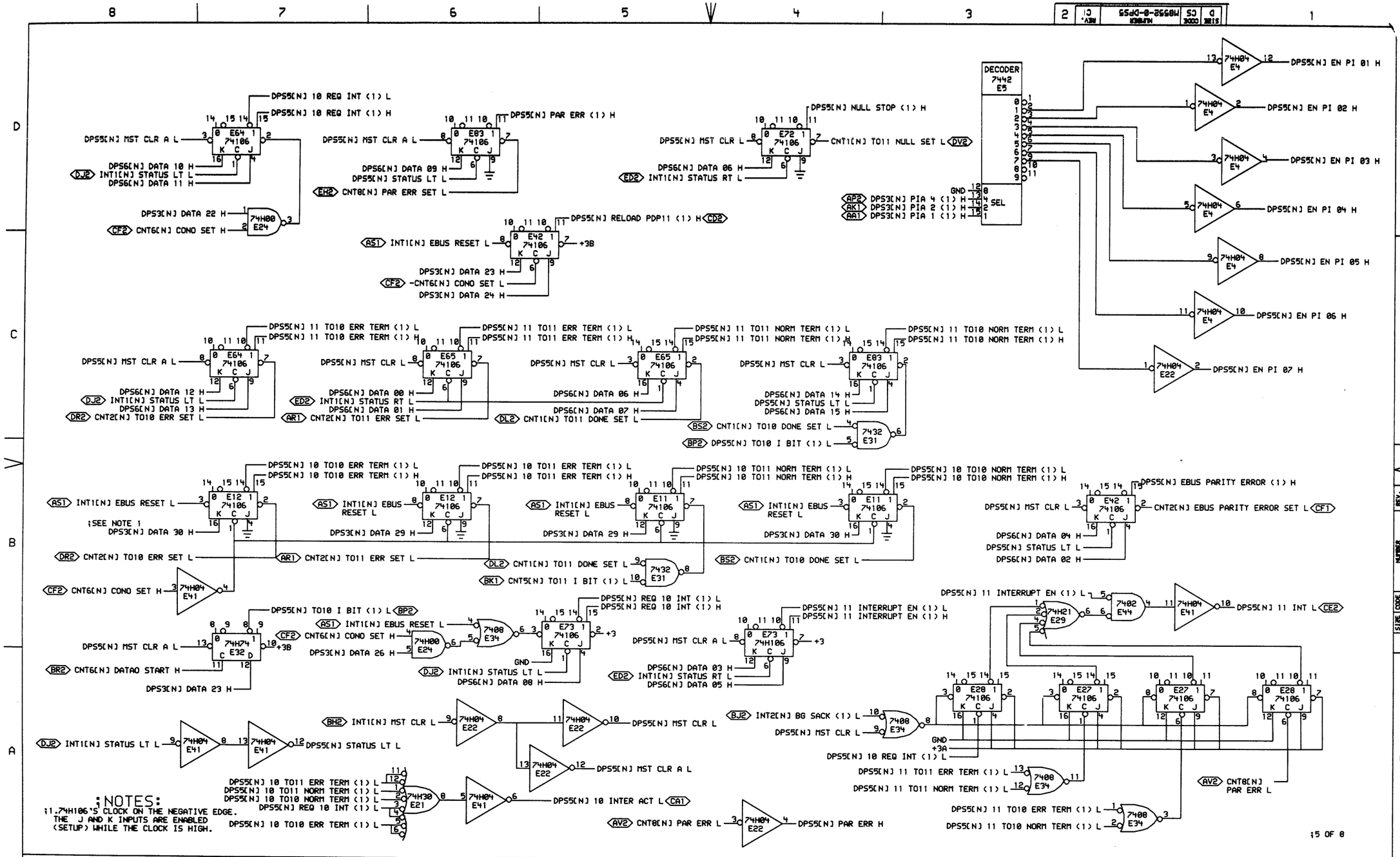

;NOTES:
;1.74H106'S CLOCK ON THE NEGATIVE EDGE.
THE J AND K INPUTS ARE ENABLED
(SETUP) WHILE THE CLOCK IS HIGH.

"THIS DRAWING AND SPECIFICATIONS, HEREIN, ARE THE PROPERTY OF DIGITAL EQUIPMENT CORPORATION AND SHALL NOT BE REPRODUCED OR COPIED OR USED IN WHOLE OR IN PART AS THE BASIS FOR THE MANUFACTURE OR SALE OF ITEMS WITHOUT WRITTEN PERMISSION. COPYRIGHT © 1976, DIGITAL EQUIPMENT CORPORATION"

REVISIONS			REVISIONS		
CHK	CHANGE NO.	REV	CHK	CHANGE NO	REV
-	M8552-00004	C		M8552-00J05	C1
	W. BRUCKERT			W. BRUCKERT	

digital

DRN.	DATE 04-JUN-76	ENG.	DATE 21 JUN 76
CHK	DATE 6/8/76	BOARD LOCATION: SHEET 1 OF 1	
DPS5X.DRW[4,426] 08-JUN-76 16:37		NEXT HIGHER ASSEMBLY:	
FIRST USED ON OPTION/MODEL: DTE20		B-DD-M8552-0	

TITLE: DATA PATH AND STATUS

SIZE	CODE	NUMBER	REV.
D	CS	M8552-0-DPS5	C1

413

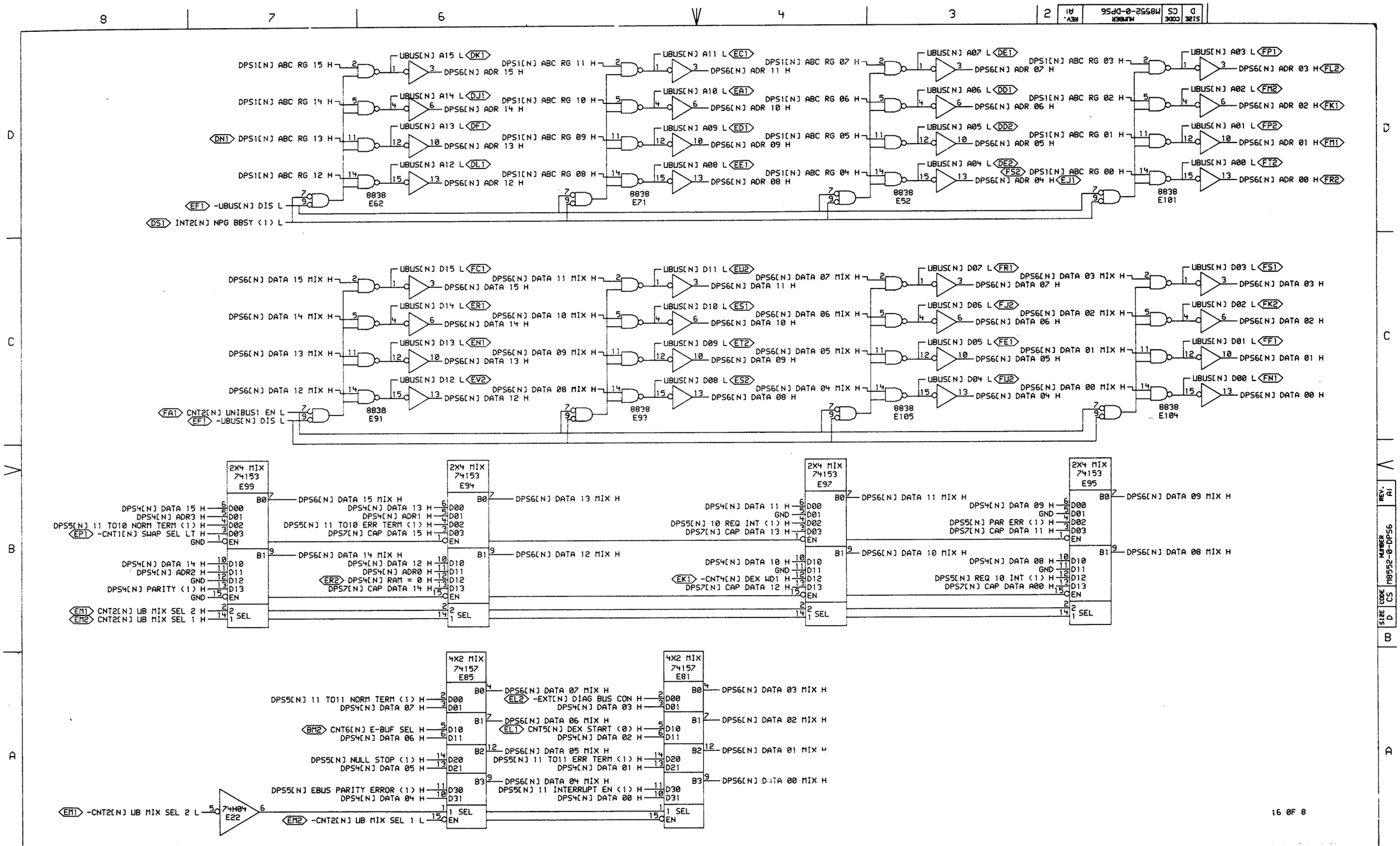

"THIS DRAWING AND SPECIFICATIONS, HEREIN, ARE THE PROPERTY OF DIGITAL EQUIPMENT CORPORATION AND SHALL NOT BE REPRODUCED OR COPIED OR USED IN WHOLE OR IN PART AS THE BASIS FOR THE MANUFACTURE OR SALE OF ITEMS WITHOUT WRITTEN PERMISSION. COPYRIGHT © 1975, DIGITAL EQUIPMENT CORPORATION"

REVISIONS			REVISIONS		
CHK	CHANGE NO.	REV	CHK	CHANGE NO	REV
	M8552-00002	A		M8552-00005	A1
	R. Wilson 7/9/75				
	W. BRUCKERT			W. BRUCKERT	

digital

DRN. W. Stephenson DATE 5/23/75 ENG. W. Bruckert DATE 5/29/75
CHK W. Stephenson DATE 5/29/75 BOARD LOCATION:
DPS6X[4,426] 24-MAY-75 09:32 SHEET 1 OF 1 NEXT HIGHER ASSEMBLY:
FIRST USED ON OPTION/MODEL: DTE20 B-DD-M8552-0

TITLE: DATA PATH AND STATUS

SIZE	CODE	NUMBER	REV.
D	CS	M8552-0-DPS6	A1

414

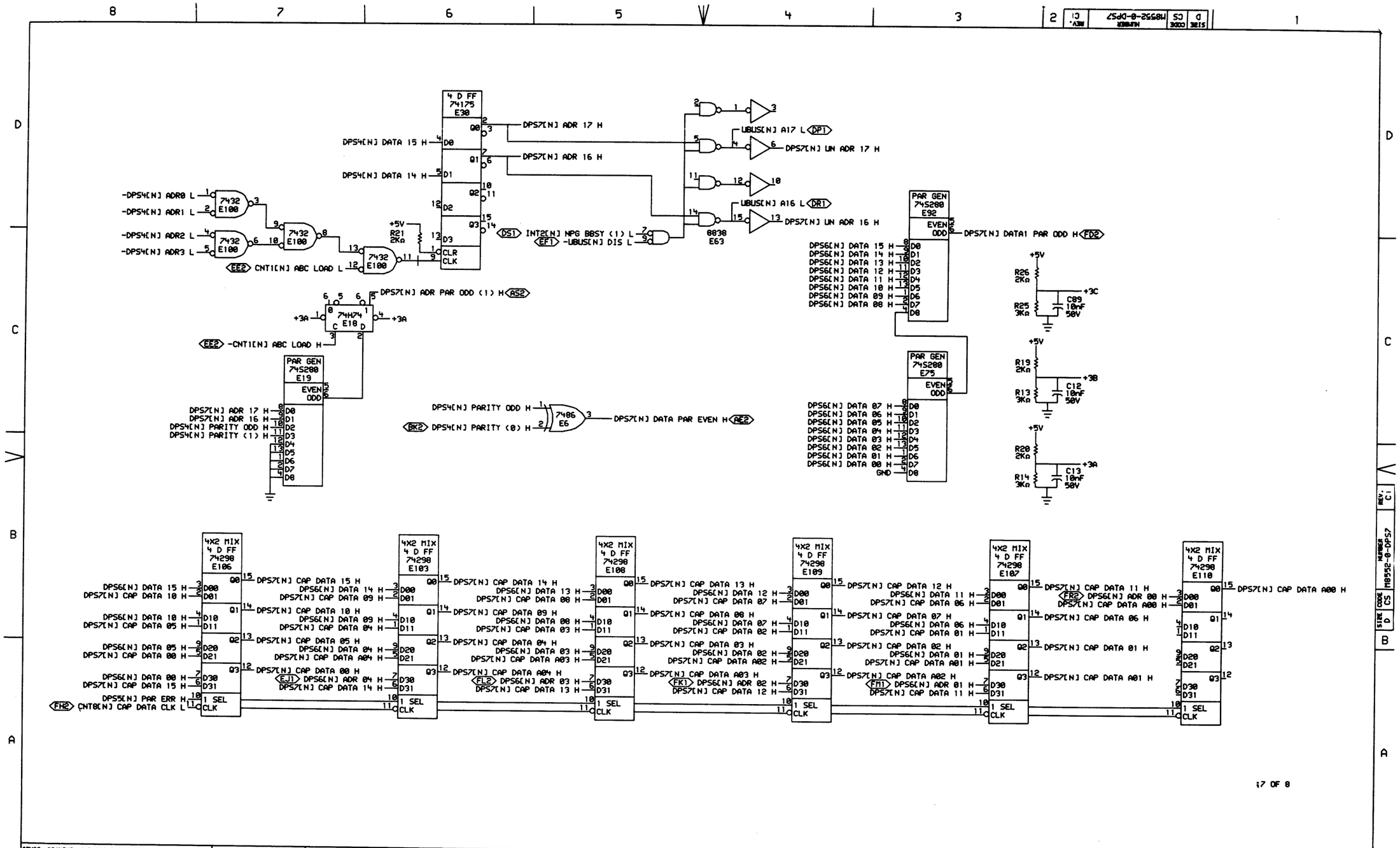

"THIS DRAWING AND SPECIFICATIONS, HEREIN, ARE THE PROPERTY OF DIGITAL EQUIPMENT CORPORATION AND SHALL NOT BE REPRODUCED OR COPIED OR USED IN WHOLE OR IN PART AS THE BASIS FOR THE MANUFACTURE OR SALE OF ITEMS WITHOUT WRITTEN PERMISSION. COPYRIGHT © 1976, DIGITAL EQUIPMENT CORPORATION"

REVISIONS		
CHK	CHANGE NO.	REV
—	M8552-00000	C

REVISIONS		
CHK	CHANGE NO	REV
	M8552-00005	C1

digital

DRW. 04-JUN-76 | ENG. DATE | DATE
CHK. DATE 6/8/76 | BOARD LOCATION: | SHEET 1 OF 1
DPS7X.DRW[4,426] 20-MAY-76 17:18 | NEXT HIGHER ASSEMBLY: B-DD-M8552-0
FIRST USED ON OPTION/MODEL: DTE20

TITLE: DATA PATH AND STATUS

SIZE	CODE	NUMBER	REV.
D	CS	M8552-0-DPS7	C1

415

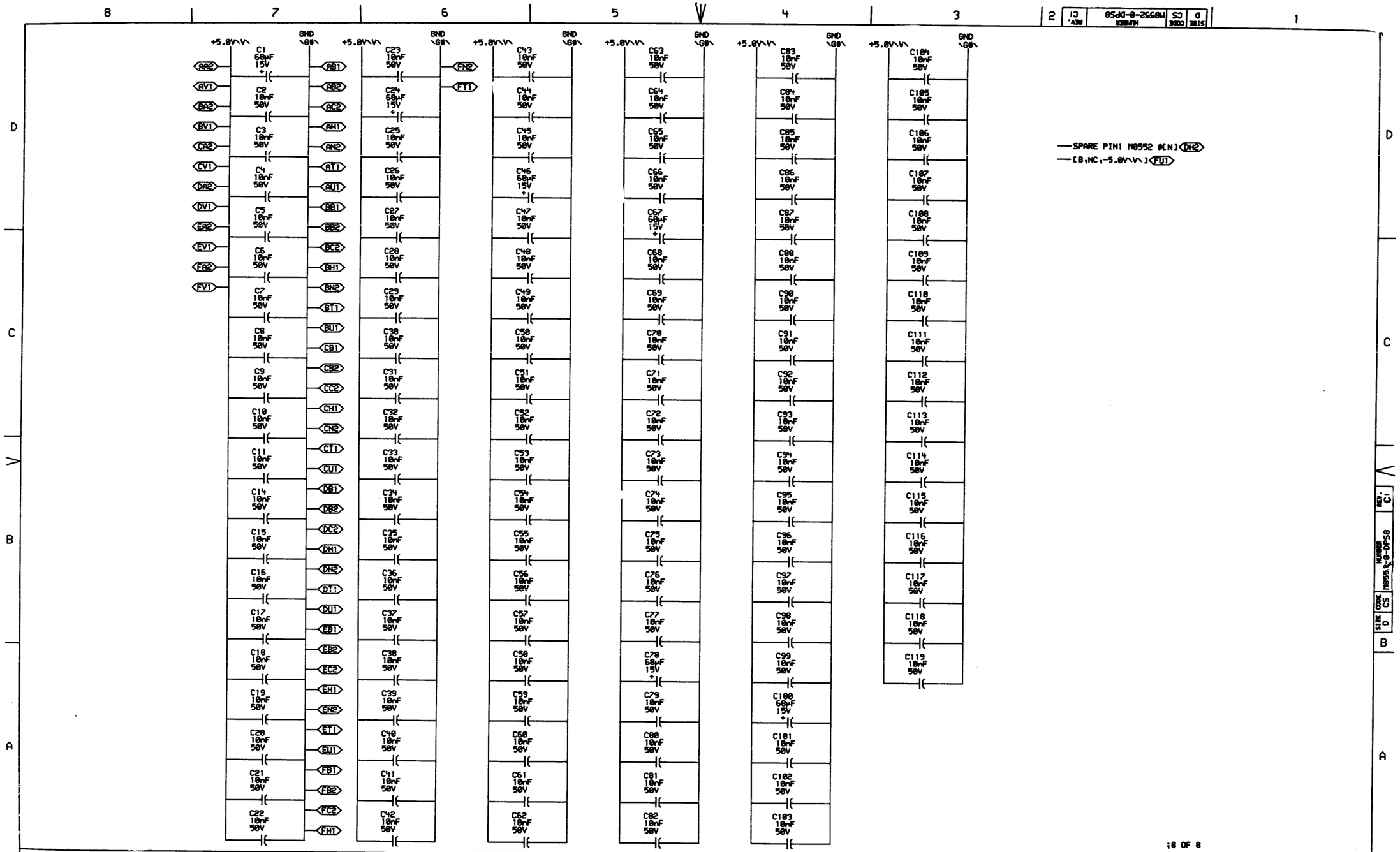

"THIS DRAWING AND SPECIFICATIONS, HEREIN, ARE THE PROPERTY OF DIGITAL EQUIPMENT CORPORATION AND SHALL NOT BE REPRODUCED OR COPIED OR USED IN WHOLE OR IN PART AS THE BASIS FOR THE MANUFACTURE OR SALE OF ITEMS WITHOUT WRITTEN PERMISSION. COPYRIGHT © 1976, DIGITAL EQUIPMENT CORPORATION"

REVISIONS					
CHK	CHANGE NO.	REV	CHK	CHANGE NO	REV
-	M8552-00004	C		M8552-00005	C1
	W. BRUCKERT			W. BRUCKERT	

digital	DRN.	DATE 01-JUN-76	ENG.	DATE 31 JUL 76	TITLE: DATA PATH & STATUS PWR, CAP & GND
	CHK'D	DATE 6/8/77	BOARD LOCATION: SHEET 1 OF 1		
DPS8EX.DRW[4,426] 03-JUN-76 14:12			NEXT HIGHER ASSEMBLY:		
FIRST USED ON OPTION/MODEL: DTE20			B-DD-M8552-0		

SIZE	CODE	NUMBER	REV.
D	CS	M8552-0-DPS8	C1

;8 OF 8

416

REVISION CONTROL SHEET

CUSTOMER PRINT SET	MFG SET	DRAWING NO	NO OF SHT	DESCRIPTION	OPTION NO/FILE DATE	REVISIONS (NEW LAYOUT VERSION)
			-	MODULE REVISION		F
		D-UA-M8552-Ø-Ø	5	10/11 DATA PATH		E
		D-CS-M8552-Ø-DPS1	1	DATA PATH AND STATUS		C
		D-CS-M8552-Ø-DPS2	1	DATA PATH AND STATUS		B
		D-CS-M8552-Ø-DPS3	1	DATA PATH AND STATUS		B
		D-CS-M8552-Ø-DPS4	1	DATA PATH AND STATUS		B
		D-CS-M8552-Ø-DPS5	1	DATA PATH AND STATUS		D
		D-CS-M8552-Ø-DPS6	1	DATA PATH AND STATUS		B
		D-CS-M8552-Ø-DPS7	1	DATA PATH AND STATUS		D
		D-CS-M8552-Ø-DPS8	1	DATA PATH AND STATUS, PWR, CAP + GND		D
		K-CO-M8552-Ø-4	1	10/11 DATA PATH		C
		D-AH-M8552-Ø-5	4	10/11 DATA PATH		B
		B-MH-M8552-Ø-6	1	MODULE ECO HISTORY		-
		5010516	-	ETCH CIRCUIT BOARD		C
		P00-M8552-ØØ		PROCESS SHEET (REF ONLY)		-

CUSTOMER PRINT SET CODES

X = PRINT OF DOCUMENT INCLUDED IN PRINT SET
C = INCLUDES ALL PRINTS INDICATED ON DOCUMENT
S = CONFIDENTIAL AUTHORIZED SIGNATURE REQUIRED

ECO NO: 00005

TITLE		SIZE	CODE	NUMBER	REV
10/11 DATA PATH	SHEET 3 OF 3	B	DD	M8552-Ø	E

417

MR

THIS DRAWING AND SPECIFICATIONS HEREIN, ARE THE PROPERTY OF DIGITAL EQUIPMENT CORPORATION, AND SHALL NOT BE REPRODUCED OR COPIED OR USED IN WHOLE OR IN PART AS THE BASIS FOR THE MANUFACTURE OR SALE OF ITEMS OF SUCH DRAWING OR DESIGN WITHOUT PERMISSION. COPYRIGHT © 1976 DIGITAL EQUIPMENT CORPORATION.

LAYER 1

M8552 5010516C-P2

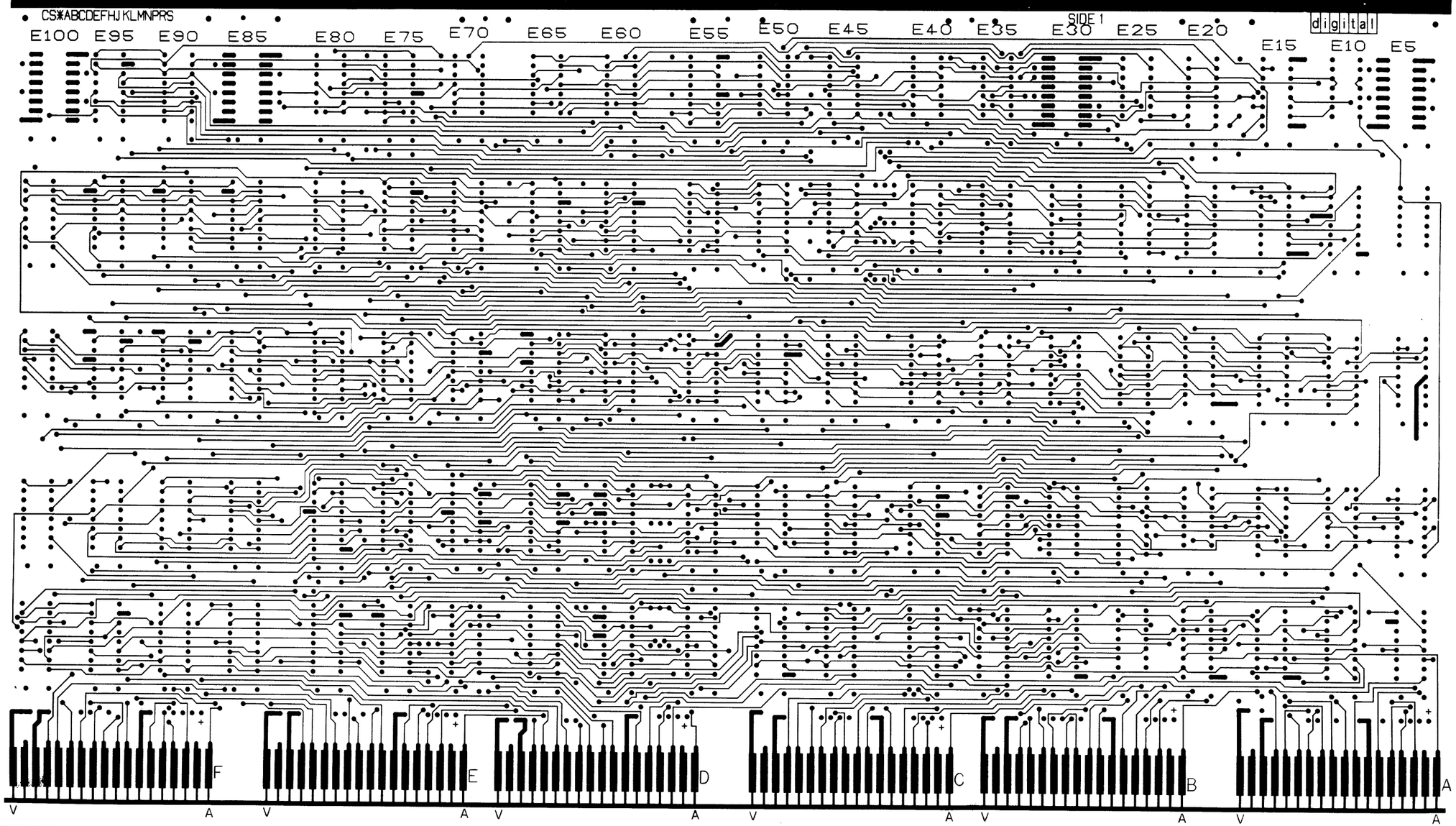

REVISIONS		
SYM	CHANGE NO	REV

TITLE	SIZE	CODE	NUMBER	REV.
10/11 DATA PATH	D	UA	M8552-Ø-Ø	E
SCALE 2/1	SHEET 3 OF 5		DIST.	

MR 1

418

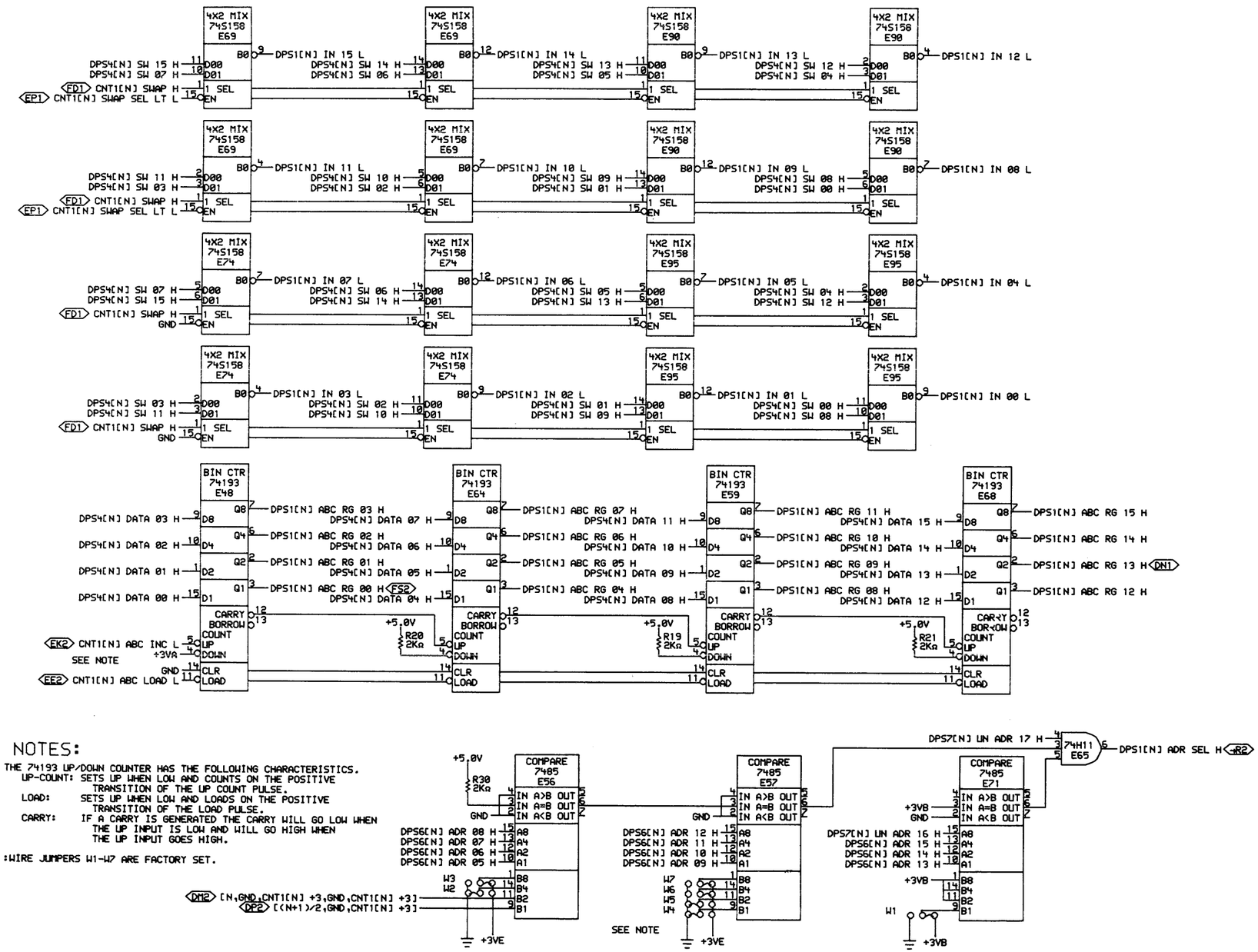

NOTES:

THE 74193 UP/DOWN COUNTER HAS THE FOLLOWING CHARACTERISTICS.

UP-COUNT: SETS UP WHEN LOW AND COUNTS ON THE POSITIVE TRANSITION OF THE UP COUNT PULSE.

LOAD: SETS UP WHEN LOW AND LOADS ON THE POSITIVE TRANSITION OF THE LOAD PULSE.

CARRY: IF A CARRY IS GENERATED THE CARRY WILL GO LOW WHEN THE UP INPUT IS LOW AND WILL GO HIGH WHEN THE UP INPUT GOES HIGH.

:WIRE JUMPERS W1-W7 ARE FACTORY SET.

DTE SLOT LOCATIONS

TYPE	N=	SLOT
SINGLE	1	2AF0
MULTIPLE	1	2AF03
	2	2AF05
	3	2AF08
	4	2AF10

1 OF 8

"THIS DRAWING AND SPECIFICATIONS, HEREIN, ARE THE PROPERTY OF DIGITAL EQUIPMENT CORPORATION AND SHALL NOT BE REPRODUCED OR COPIED OR USED IN WHOLE OR IN PART AS THE BASIS FOR THE MANUFACTURE OR SALE OF ITEMS WITHOUT WRITTEN PERMISSION. COPYRIGHT © 1977, DIGITAL EQUIPMENT CORPORATION"

REVISIONS		
CHK	CHANGE NO.	REV

DRN. J. Cooley DATE 18-FEB-77 ENG. G. Bruchert DATE 23-FEB-77
CHK'D J. Stephenson DATE 2/11/77 BOARD LOCATION: SHEET 1 OF 1
DPS1R5.DRUC[4,613] 09-FEB-77 12:08 NEXT HIGHER ASSEMBLY:
FIRST USED ON OPTION/MODEL: DTE20 B-DD-M8552-0

TITLE: DATA PATH AND STATUS

SIZE	CODE	NUMBER	REV.
D	CS	M8552-0-DPS1	C

419

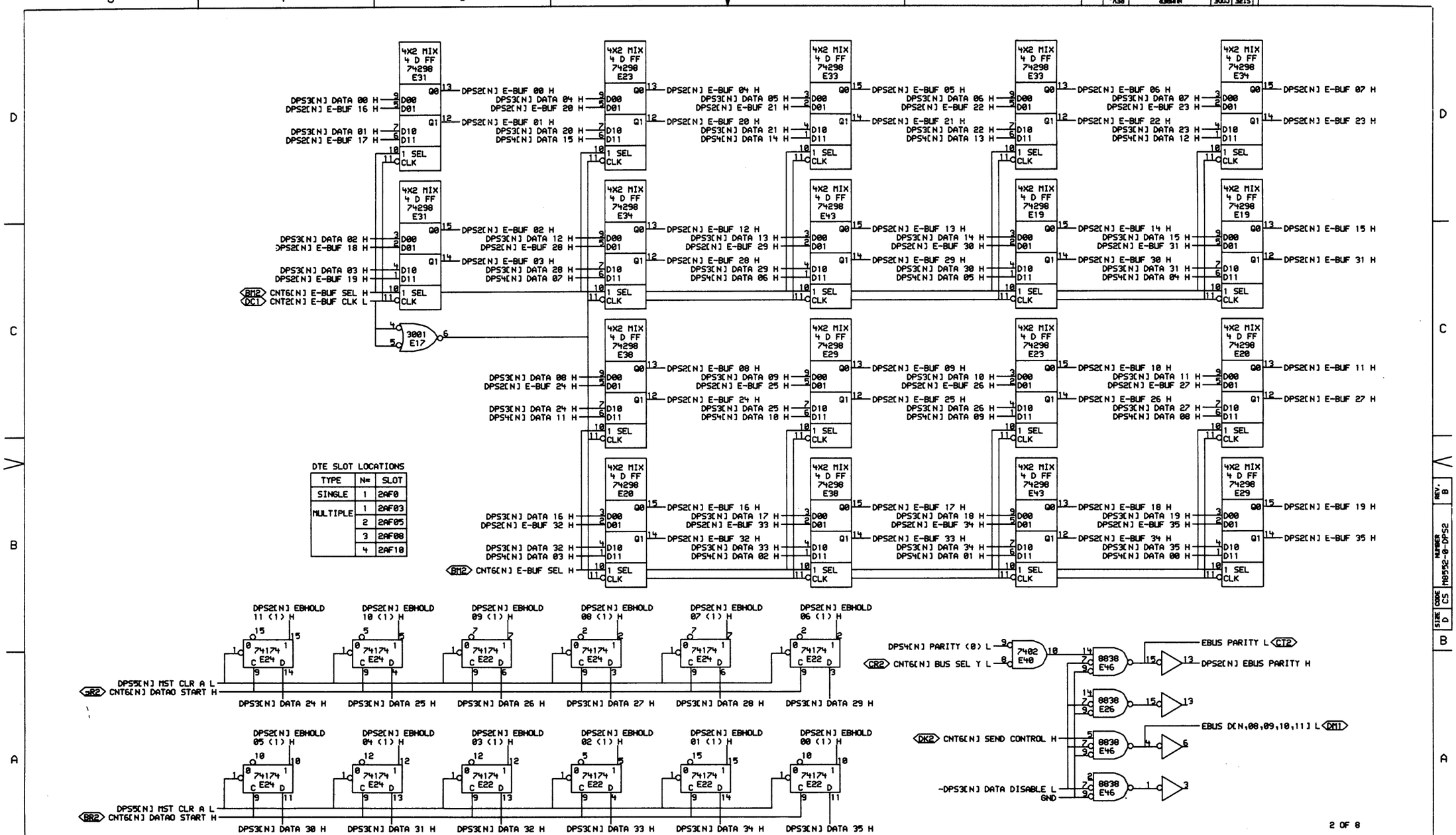

DTE SLOT LOCATIONS

TYPE	N=	SLOT
SINGLE	1	2AF0
MULTIPLE	1	2AF03
	2	2AF05
	3	2AF08
	4	2AF10

"THIS DRAWING AND SPECIFICATIONS, HEREIN, ARE THE PROPERTY OF DIGITAL EQUIPMENT CORPORATION AND SHALL NOT BE REPRODUCED OR COPIED OR USED IN WHOLE OR IN PART AS THE BASIS FOR THE MANUFACTURE OR SALE OF ITEMS WITHOUT WRITTEN PERMISSION. COPYRIGHT © 1977, DIGITAL EQUIPMENT CORPORATION"

REVISIONS		
CHK	CHANGE NO.	REV

M8552-00008 B
W. BRUCKERT

digital

DRW. | CHK'D | DATE 10-FEB-77 | ENG. W. Bruckert | DATE 23FEB77
BOARD LOCATION: | SHEET OF
DPS2RS.DRW[4,613] 09-FEB-77 12:58 | NEXT HIGHER ASSEMBLY:
FIRST USED ON OPTION/MODEL: DTE20 | B-DD-M8552-0

TITLE: DATA PATH AND STATUS

SIZE	CODE	NUMBER	REV.
D	CS	M8552-0-DPS2	B

420

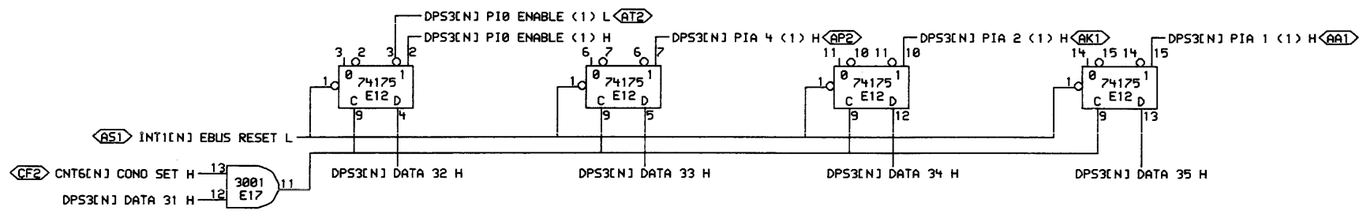

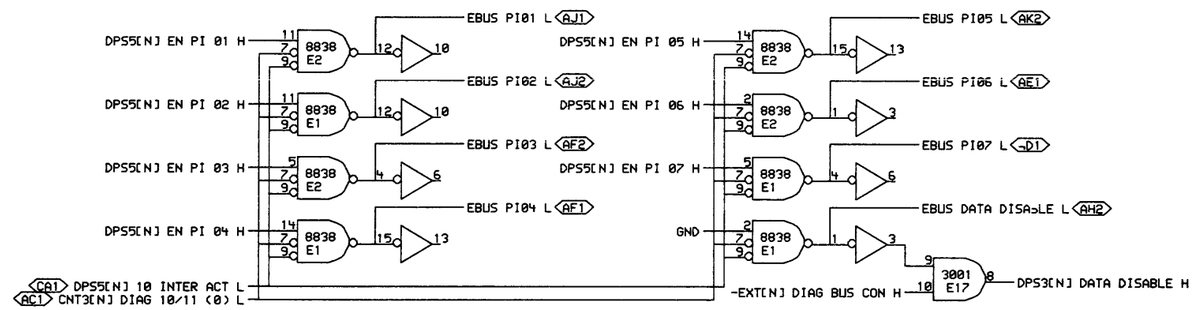

DTE SLOT LOCATIONS

TYPE	N=	SLOT
SINGLE	1	2AF0
MULTIPLE	1	2AF03
	2	2AF05
	3	2AF08
	4	2AF10

3A OF 8

"THIS DRAWING AND SPECIFICATIONS, HEREIN, ARE THE PROPERTY OF DIGITAL EQUIPMENT CORPORATION AND SHALL NOT BE REPRODUCED OR COPIED OR USED IN WHOLE OR IN PART AS THE BASIS FOR THE MANUFACTURE OR SALE OF ITEMS WITHOUT WRITTEN PERMISSION. COPYRIGHT © 1977, DIGITAL EQUIPMENT CORPORATION"

REVISIONS		
CHK	CHANGE NO.	REV

M8552-00005 B
W. BRUCKERT

DRW. S. Loomis 11-FEB-77
CHK'D Wilsphuss 6/11/77
ENG. W. Bruckert 23FEB77
DATE
BOARD LOCATION:
SHEET 1 OF 2
DPS3A?.DRW[4,613] 09-FEB-77 12:59
NEXT HIGHER ASSEMBLY: B-DD-M8552-0
FIRST USED ON OPTION/MODEL: DTE20

TITLE: DATA PATH AND STATUS

SIZE	CODE	NUMBER	REV.
D	CS	M8552-0-DPS3	B

421

MR

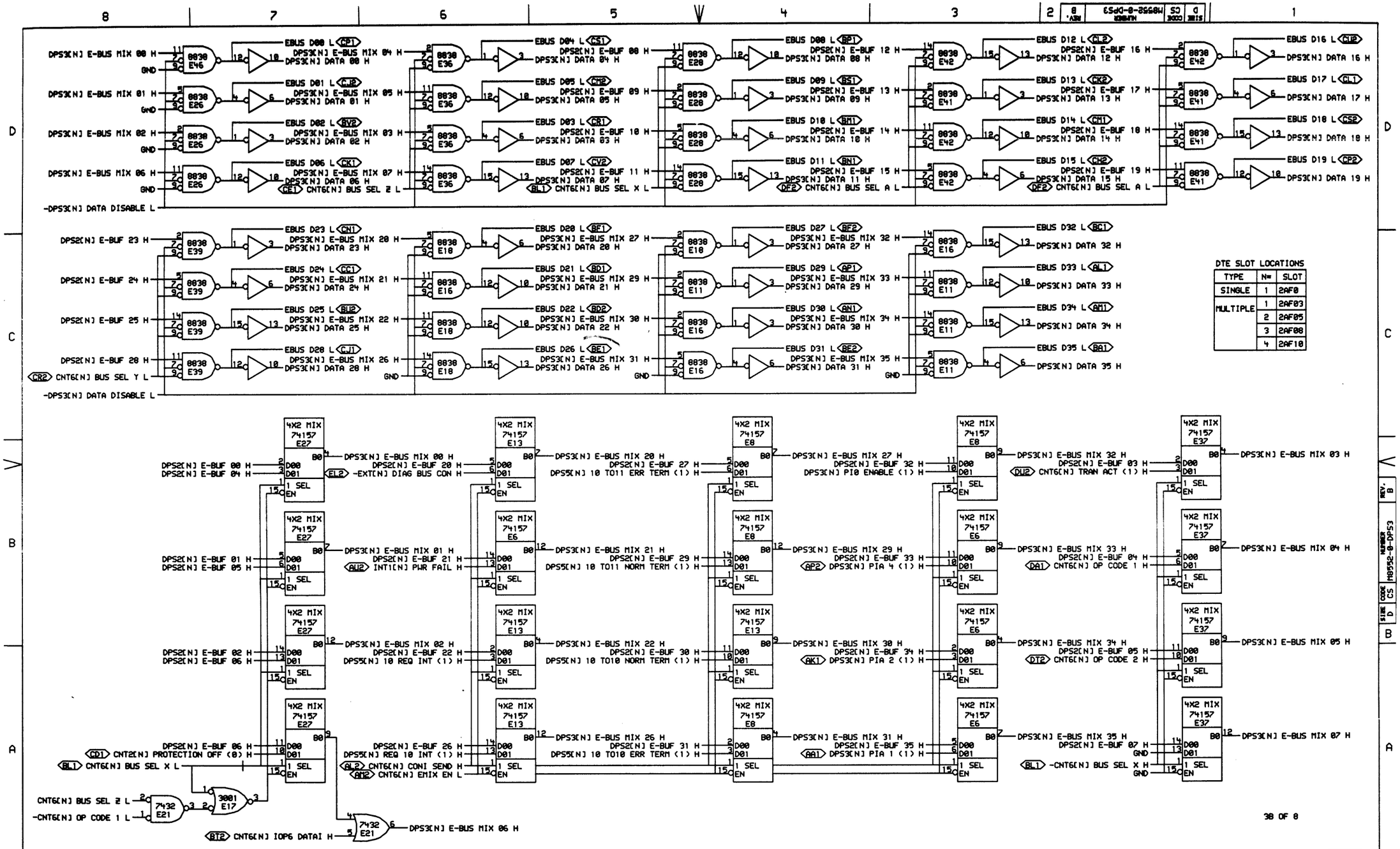

DTE SLOT LOCATIONS

TYPE	N=	SLOT
SINGLE	1	2AF0
MULTIPLE	1	2AF03
	2	2AF05
	3	2AF08
	4	2AF10

"THIS DRAWING AND SPECIFICATIONS, HEREIN, ARE THE PROPERTY OF DIGITAL EQUIPMENT CORPORATION AND SHALL NOT BE REPRODUCED OR COPIED OR USED IN WHOLE OR IN PART AS THE BASIS FOR THE MANUFACTURE OR SALE OF ITEMS WITHOUT WRITTEN PERMISSION. COPYRIGHT © 1977, DIGITAL EQUIPMENT CORPORATION"

REVISIONS		
CHK	CHANGE NO.	REV

M8552-00005 B
W. BRUCKERT

DRW. 10-FEB-77 | ENG. 23FEB77 | DATE

DPS3RS.DRW[4,613] 09-FEB-77 13:02

FIRST USED ON OPTION/MODEL: DTE20

BOARD LOCATION: SHEET 2 OF 2

NEXT HIGHER ASSEMBLY: B-DD-M8552-0

TITLE: DATA PATH AND STATUS

SIZE	CODE	NUMBER	REV.
D	CS	M8552-0-DPS3	B

422

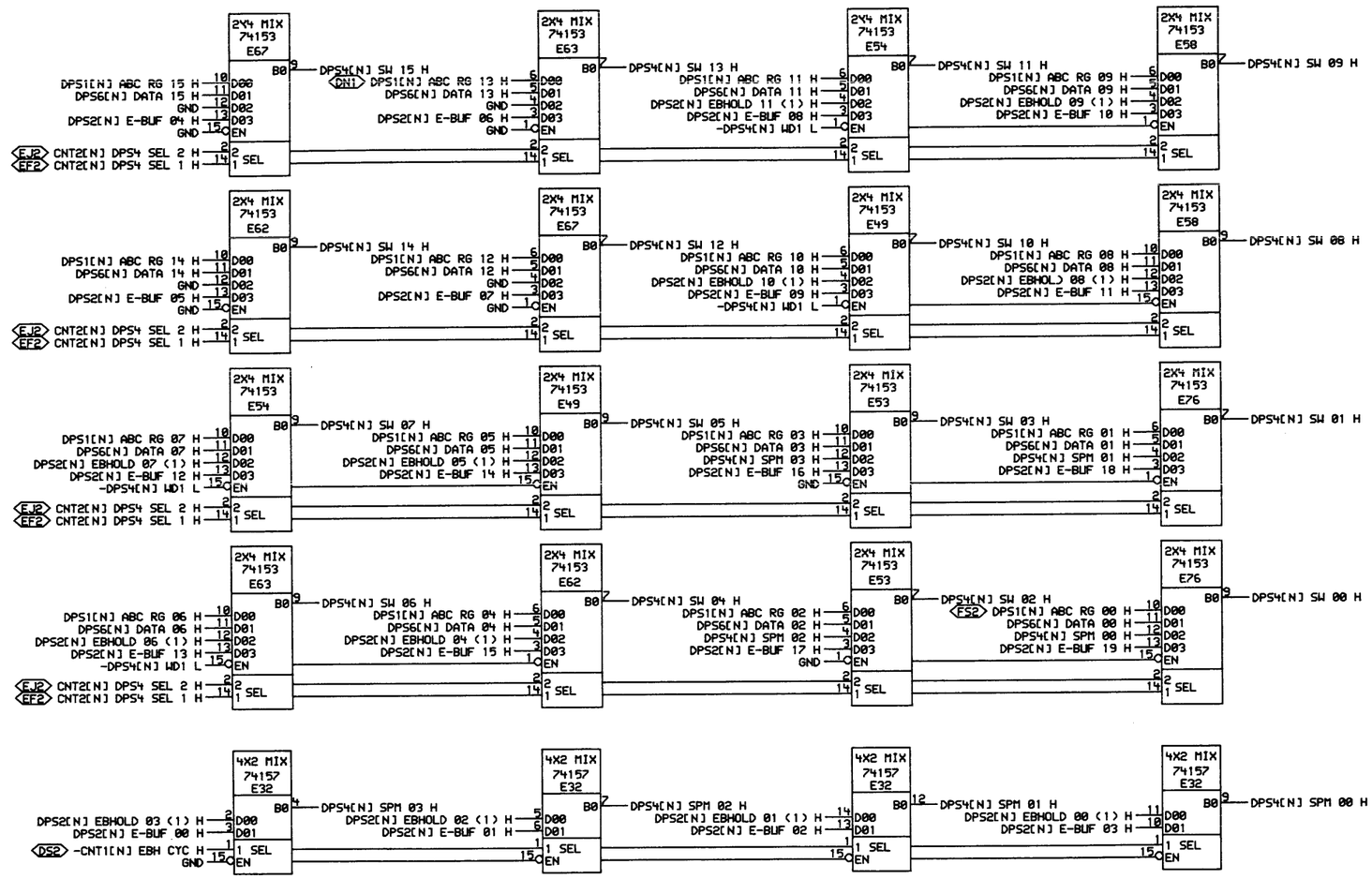

DTE SLOT LOCATIONS

TYPE	N=	SLOT
SINGLE	1	2AF0
MULTIPLE	1	2AF03
	2	2AF05
	3	2AF08
	4	2AF10

4A OF 8

"THIS DRAWING AND SPECIFICATIONS, HEREIN, ARE THE PROPERTY OF DIGITAL EQUIPMENT CORPORATION AND SHALL NOT BE REPRODUCED OR COPIED OR USED IN WHOLE OR IN PART AS THE BASIS FOR THE MANUFACTURE OR SALE OF ITEMS WITHOUT WRITTEN PERMISSION. COPYRIGHT © 1977, DIGITAL EQUIPMENT CORPORATION"

REVISIONS		
CHK	CHANGE NO.	REV

M8552-00005 B
4/4/77
W. BRUCKERT

DRN. 11-FEB-77
CHK'D 2/11/77
ENG. 23FEB77
BOARD LOCATION:
SHEET 1 OF 2
DPS4AR.DRW[4,613] 09-FEB-77 13:03
NEXT HIGHER ASSEMBLY: B-DD-M8552-0
FIRST USED ON OPTION/MODEL: DTE20

TITLE: DATA PATH AND STATUS

SIZE	CODE	NUMBER	REV.
D	CS	M8552-0-DPS4	B

423

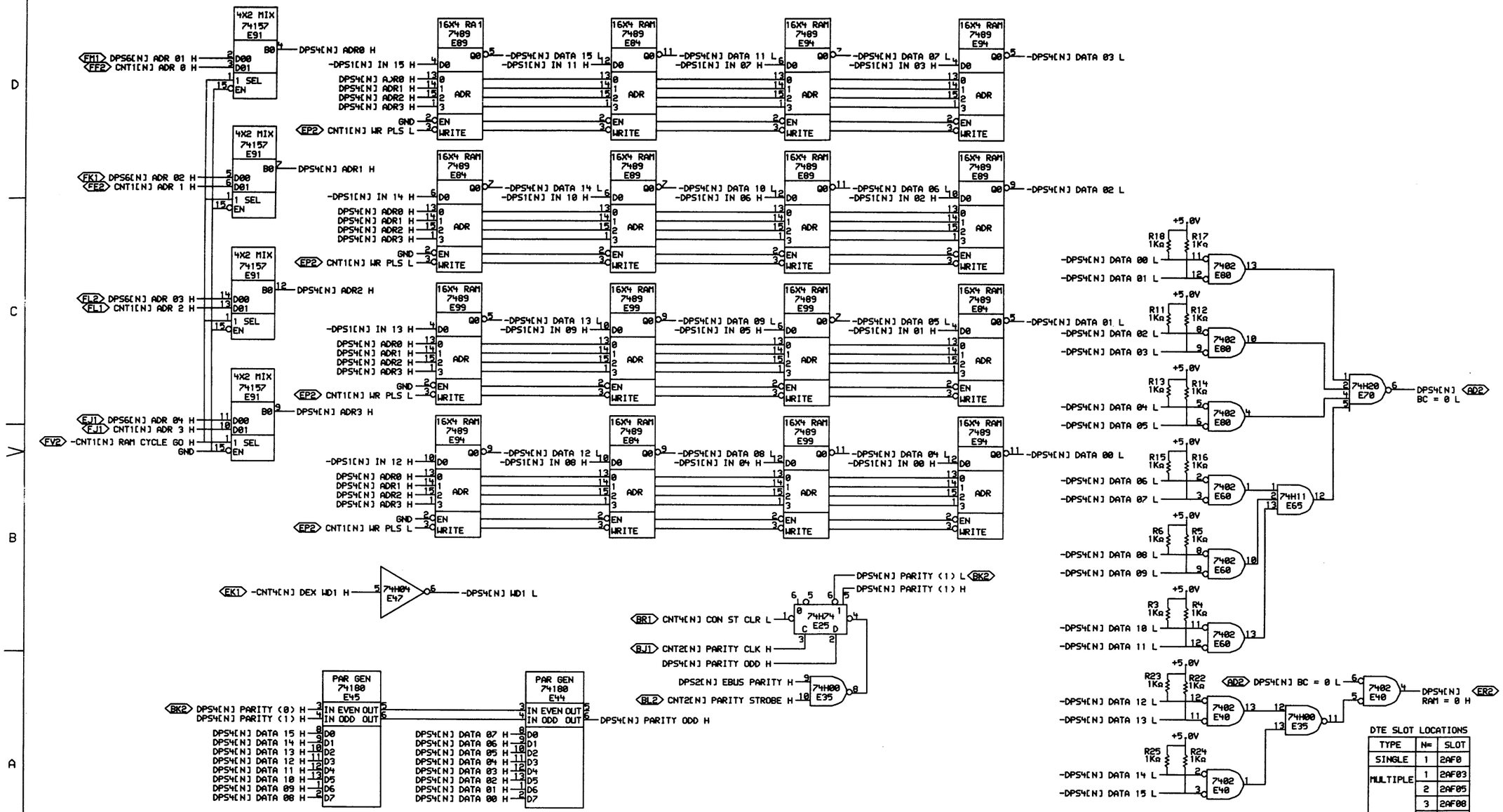

DTE SLOT LOCATIONS

TYPE	N=	SLOT
SINGLE	1	2AF0
MULTIPLE	1	2AF03
	2	2AF05
	3	2AF08
	4	2AF10

4B OF 8

"THIS DRAWING AND SPECIFICATIONS, HEREIN, ARE THE PROPERTY OF DIGITAL EQUIPMENT CORPORATION AND SHALL NOT BE REPRODUCED OR COPIED OR USED IN WHOLE OR IN PART AS THE BASIS FOR THE MANUFACTURE OR SALE OF ITEMS WITHOUT WRITTEN PERMISSION.
COPYRIGHT © 1977, DIGITAL EQUIPMENT CORPORATION"

REVISIONS		
CHK	CHANGE NO.	REV

M8552-00005 B
4/1/77
W. BRUCKERT
12-AR-77

digital

DRW. 11-FEB-77 | ENG. 23 FEB 77 | CHK. 2/11/77 | BOARD LOCATION: SHEET 2 OF 2
DPS4RS.DRW[4,613] 09-FEB-77 13:03 | NEXT HIGHER ASSEMBLY: B-DD-M8552-0
FIRST USED ON OPTION/MODEL: DTE20

TITLE: DATA PATH AND STATUS

SIZE	CODE	NUMBER	REV.
D	CS	M8552-0-DPS4	B

424

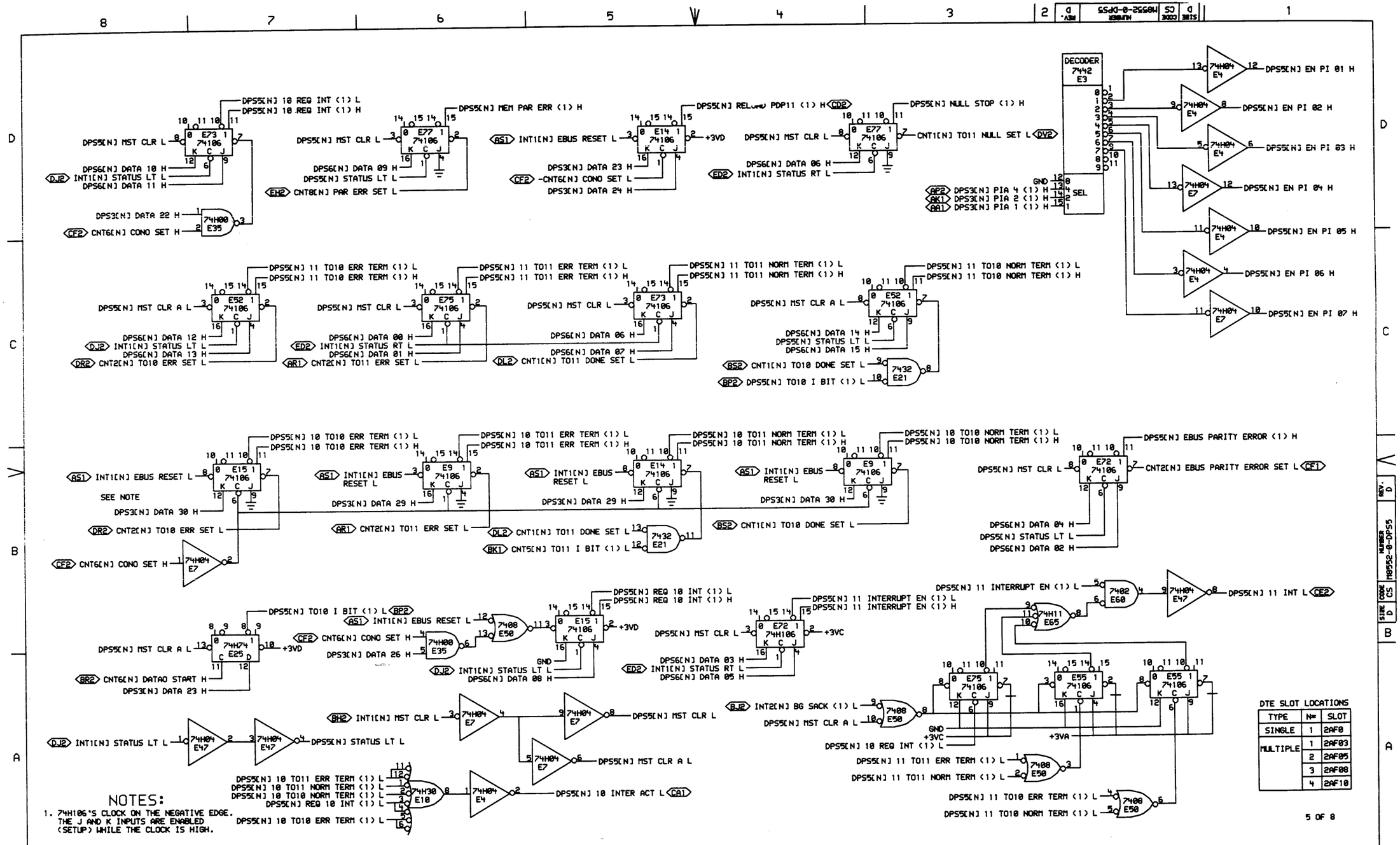
DPS5[N] 10 REQ INT (1) L
DPS5[N] 10 REQ INT (1) H
DPS5[N] MST CLR L
DPS6[N] DATA 10 H
DJ2 INT1[N] STATUS LT L
DPS6[N] DATA 11 H
DPS3[N] DATA 22 H
CF2 CNT6[N] CONO SET H
E73 74106
E35 74H00
DPS5[N] MEM PAR ERR (1) H
DPS5[N] MST CLR L
DPS6[N] DATA 09 H
DPS5[N] STATUS LT L
EH2 CNT8[N] PAR ERR SET L
E77 74106
AS1 INT1[N] EBUS RESET L
+3VD
DPS3[N] DATA 23 H
CF2 -CNT6[N] CONO SET L
DPS3[N] DATA 24 H
E14 74106
DPS5[N] RELOAD PDP11 (1) H CD2
DPS5[N] NULL STOP (1) H
DPS5[N] MST CLR L
CNT1[N] TO11 NULL SET L DV2
DPS6[N] DATA 06 H
ED2 INT1[N] STATUS RT L
DECODER 7442 E3
GND
SEL
AP2 DPS3[N] PIA 4 (1) H
AK1 DPS3[N] PIA 2 (1) H
AA1 DPS3[N] PIA 1 (1) H
74H04 E4
DPS5[N] EN PI 01 H
DPS5[N] EN PI 02 H
DPS5[N] EN PI 03 H
74H04 E7
DPS5[N] EN PI 04 H
DPS5[N] EN PI 05 H
DPS5[N] EN PI 06 H
DPS5[N] EN PI 07 H
DPS5[N] 11 TO10 ERR TERM (1) L
DPS5[N] 11 TO10 ERR TERM (1) H
DPS5[N] MST CLR A L
DPS6[N] DATA 12 H
DJ2 INT1[N] STATUS LT L
DPS6[N] DATA 13 H
DR2 CNT2[N] TO10 ERR SET L
E52 74106
DPS5[N] 11 TO11 ERR TERM (1) L
DPS5[N] 11 TO11 ERR TERM (1) H
DPS5[N] MST CLR L
DPS6[N] DATA 00 H
ED2 INT1[N] STATUS RT L
DPS6[N] DATA 01 H
AR1 CNT2[N] TO11 ERR SET L
E75 74106
DPS5[N] 11 TO11 NORM TERM (1) L
DPS5[N] 11 TO11 NORM TERM (1) H
DPS5[N] MST CLR L
DPS6[N] DATA 06 H
DPS6[N] DATA 07 H
DL2 CNT1[N] TO11 DONE SET L
E73 74106
DPS5[N] 11 TO10 NORM TERM (1) L
DPS5[N] 11 TO10 NORM TERM (1) H
DPS5[N] MST CLR A L
DPS6[N] DATA 14 H
DPS5[N] STATUS LT L
DPS6[N] DATA 15 H
BS2 CNT1[N] TO10 DONE SET L
BP2 DPS5[N] TO10 I BIT (1) L
7432 E21
DPS5[N] 10 TO10 ERR TERM (1) L
DPS5[N] 10 TO10 ERR TERM (1) H
AS1 INT1[N] EBUS RESET L
SEE NOTE
DPS3[N] DATA 30 H
DR2 CNT2[N] TO10 ERR SET L
CF2 CNT6[N] CONO SET H
E15 74106
74H04 E7
DPS5[N] 10 TO11 ERR TERM (1) L
DPS5[N] 10 TO11 ERR TERM (1) H
AS1 INT1[N] EBUS RESET L
DPS3[N] DATA 29 H
AR1 CNT2[N] TO11 ERR SET L
E9 74106
DPS5[N] 10 TO11 NORM TERM (1) L
DPS5[N] 10 TO11 NORM TERM (1) H
AS1 INT1[N] EBUS RESET L
DPS3[N] DATA 29 H
DL2 CNT1[N] TO11 DONE SET L
BK1 CNT5[N] TO11 I BIT (1) L
7432 E21
DPS5[N] 10 TO10 NORM TERM (1) L
DPS5[N] 10 TO10 NORM TERM (1) H
AS1 INT1[N] EBUS RESET L
DPS3[N] DATA 30 H
BS2 CNT1[N] TO10 DONE SET L
E14 74106
DPS5[N] EBUS PARITY ERROR (1) H
DPS5[N] MST CLR L
CNT2[N] EBUS PARITY ERROR SET L CF1
DPS6[N] DATA 04 H
DPS5[N] STATUS LT L
DPS6[N] DATA 02 H
E72 74106
DPS5[N] TO10 I BIT (1) L BP2
DPS5[N] MST CLR A L
+3VD
BR2 CNT6[N] DATAO START H
DPS3[N] DATA 23 H
E25 74H74
AS1 INT1[N] EBUS RESET L
CF2 CNT6[N] CONO SET H
DPS3[N] DATA 26 H
DJ2 INT1[N] STATUS LT L
DPS6[N] DATA 08 H
E35 74H00
7408 E50
DPS5[N] REQ 10 INT (1) L
DPS5[N] REQ 10 INT (1) H
E15 74106
+3VD
GND
DPS5[N] 11 INTERRUPT EN (1) L
DPS5[N] 11 INTERRUPT EN (1) H
DPS5[N] MST CLR L
+3VC
DPS6[N] DATA 03 H
ED2 INT1[N] STATUS RT L
DPS6[N] DATA 05 H
E72 74H106
DPS5[N] 11 INTERRUPT EN (1) L
7402 E60
74H04 E47
DPS5[N] 11 INT L CE2
74H11 E65
BH2 INT1[N] MST CLR L
DPS5[N] MST CLR L
DJ2 INT1[N] STATUS LT L
DPS5[N] STATUS LT L
DPS5[N] MST CLR A L
DPS5[N] 10 INTER ACT L CA1
DPS5[N] 10 TO11 ERR TERM (1) L
DPS5[N] 10 TO11 NORM TERM (1) L
DPS5[N] 10 TO10 NORM TERM (1) L
DPS5[N] REQ 10 INT (1) L
DPS5[N] 10 TO10 ERR TERM (1) L
74H30 E10
BJ2 INT2[N] BG SACK (1) L
DPS5[N] MST CLR A L
GND
+3VC
DPS5[N] 10 REQ INT (1) L
+3VA
DPS5[N] 11 TO11 ERR TERM (1) L
DPS5[N] 11 TO11 NORM TERM (1) L
DPS5[N] 11 TO10 ERR TERM (1) L
DPS5[N] 11 TO10 NORM TERM (1) L
E75 74106
E55 74106
NOTES:
1. 74H106'S CLOCK ON THE NEGATIVE EDGE. THE J AND K INPUTS ARE ENABLED (SETUP) WHILE THE CLOCK IS HIGH.
DTE SLOT LOCATIONS
TYPE | N= | SLOT
SINGLE | 1 | 2AF0
MULTIPLE | 1 | 2AF03
2 | 2AF05
3 | 2AF08
4 | 2AF10
5 OF 8
"THIS DRAWING AND SPECIFICATIONS, HEREIN, ARE THE PROPERTY OF DIGITAL EQUIPMENT CORPORATION AND SHALL NOT BE REPRODUCED OR COPIED OR USED IN WHOLE OR IN PART AS THE BASIS FOR THE MANUFACTURE OR SALE OF ITEMS WITHOUT WRITTEN PERMISSION. COPYRIGHT © 1977, DIGITAL EQUIPMENT CORPORATION"
REVISIONS
CHK CHANGE NO. REV
M8552-00005 D
W. BRUCKERT
digital
DPS5RS.DRW(4.613) 09-FEB-77 13:04
FIRST USED ON OPTION/MODEL: DTE20
DATE 10-FEB-77
ENG. N. Bruckert
DATE 23-FEB-77
BOARD LOCATION:
SHEET 1 OF 1
NEXT HIGHER ASSEMBLY: B-DD-M8552-0
TITLE: DATA PATH AND STATUS
SIZE D
CODE CS
NUMBER M8552-0-DPS5
REV. D

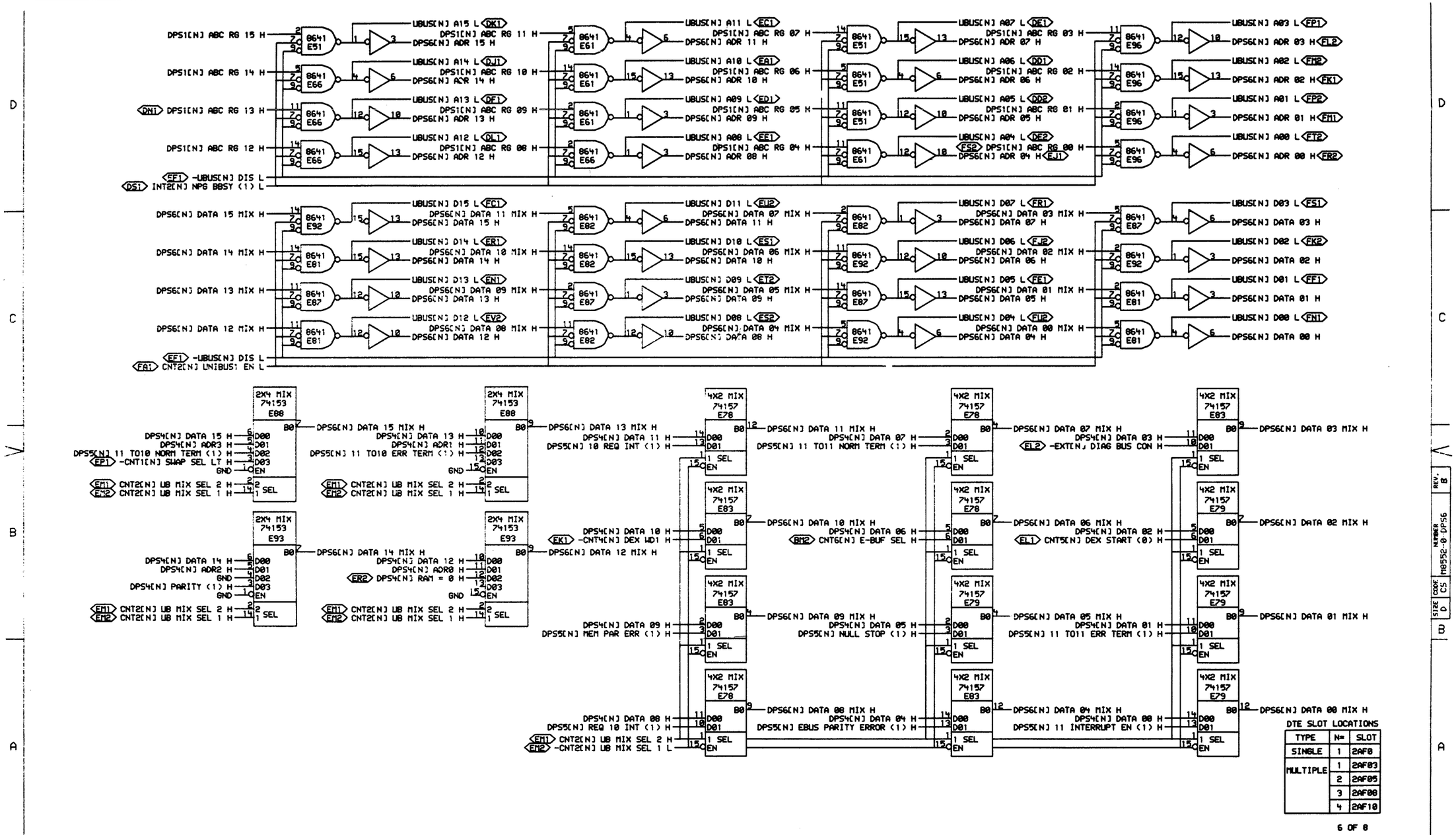

DTE SLOT LOCATIONS

TYPE	N=	SLOT
SINGLE	1	2AF0
MULTIPLE	1	2AF03
	2	2AF05
	3	2AF08
	4	2AF10

6 OF 8

"THIS DRAWING AND SPECIFICATIONS, HEREIN, ARE THE PROPERTY OF DIGITAL EQUIPMENT CORPORATION AND SHALL NOT BE REPRODUCED OR COPIED OR USED IN WHOLE OR IN PART AS THE BASIS FOR THE MANUFACTURE OR SALE OF ITEMS WITHOUT WRITTEN PERMISSION.
COPYRIGHT © 1977, DIGITAL EQUIPMENT CORPORATION"

REVISIONS		
CHK	CHANGE NO.	REV

M8552-00005 B
W. BRUCKERT

DRW. DATE 10-FEB-77 ENG. M. Bruckert DATE 23 FEB 77
CHK. DATE 2/11/77 BOARD LOCATION: SHEET OF
DPS6RS.DRW[4,613] 09-FEB-77 13:05 NEXT HIGHER ASSEMBLY:
FIRST USED ON OPTION/MODEL: DTE20 B-DD-M8552-0

TITLE: DATA PATH AND STATUS

SIZE	CODE	NUMBER	REV
D	CS	M8552-0-DPS6	B

426

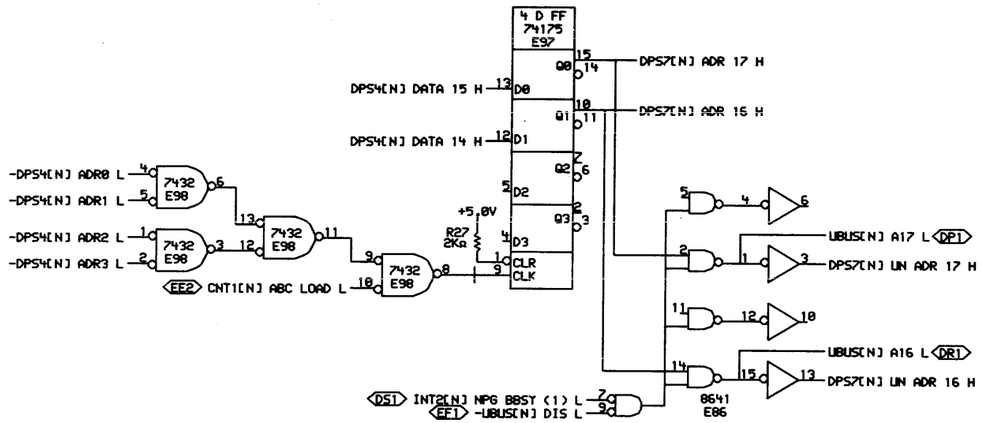

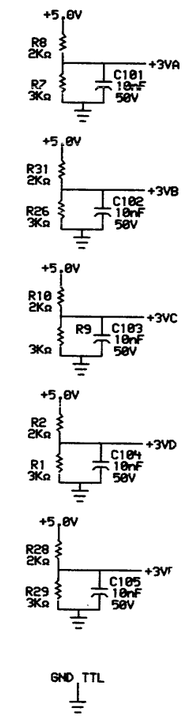

DTE SLOT LOCATIONS

TYPE	N=	SLOT
SINGLE	1	2AF0
MULTIPLE	1	2AF03
	2	2AF05
	3	2AF08
	4	2AF10

7 OF 8

"THIS DRAWING AND SPECIFICATIONS, HEREIN, ARE THE PROPERTY OF DIGITAL EQUIPMENT CORPORATION AND SHALL NOT BE REPRODUCED OR COPIED OR USED IN WHOLE OR IN PART AS THE BASIS FOR THE MANUFACTURE OR SALE OF ITEMS WITHOUT WRITTEN PERMISSION.
COPYRIGHT © 1977, DIGITAL EQUIPMENT CORPORATION"

REVISIONS		
CHK	CHANGE NO.	REV

M8552-00005 D
W. BRUCKERT

DRN. 11-FEB-77 ENG. DATE 15-FEB-77
CHK'D DATE BOARD LOCATION:
SHEET 1 OF 1
DPS7RS.DRW[4,6133] 09-FEB-77 13:06 NEXT HIGHER ASSEMBLY:
FIRST USED ON OPTION/MODEL: DTE20 B-DD-M8552-0

TITLE: DATA PATH AND STATUS

SIZE	CODE	NUMBER	REV.
D	CS	M8552-0-DPS7	D

427

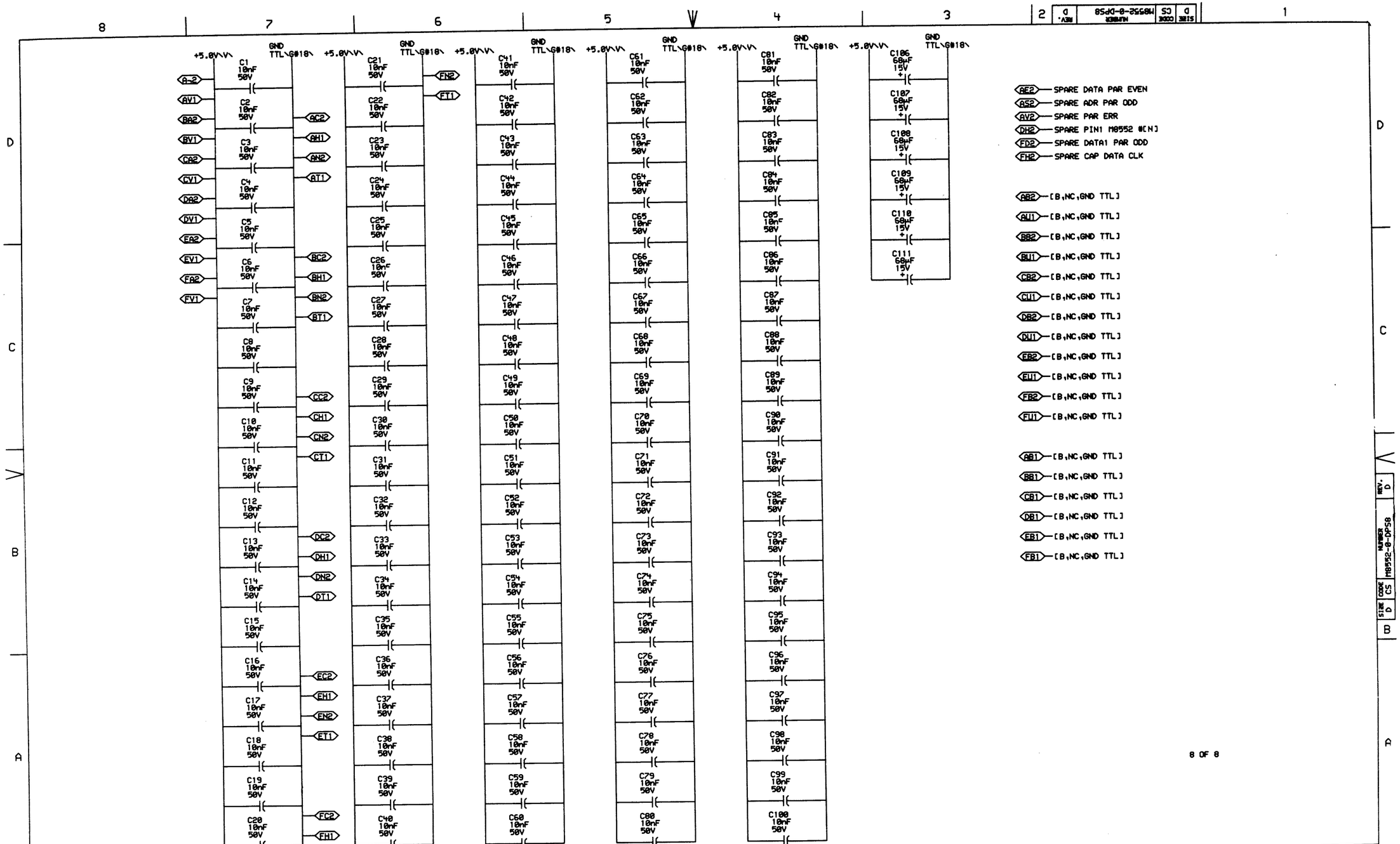

"THIS DRAWING AND SPECIFICATIONS, HEREIN, ARE THE PROPERTY OF DIGITAL EQUIPMENT CORPORATION AND SHALL NOT BE REPRODUCED OR COPIED OR USED IN WHOLE OR IN PART AS THE BASIS FOR THE MANUFACTURE OR SALE OF ITEMS WITHOUT WRITTEN PERMISSION.
COPYRIGHT © 1977, DIGITAL EQUIPMENT CORPORATION"

REVISIONS		
CHK	CHANGE NO.	REV

M8552-00005 D
W.BRUCKERT
12-APR-77

digital

DRW. L. Loosley DATE 11-FEB-77
CHK'D. DATE 2/11/77
ENG. W. Bruckert DATE 23FEB77
BOARD LOCATION:
SHEET 1 OF 1
DPS8RS.DRW[4,613] 10-FEB-77 10:36
NEXT HIGHER ASSEMBLY:
FIRST USED ON OPTION/MODEL: DTE20
B-DD-M8552-0

TITLE: DATA PATH & STATUS PWR, CAP & GND

SIZE	CODE	NUMBER	REV.
D	CS	M8552-0-DPS8	D

428

1 N/P

REVISION CONTROL SHEET

CUSTOMER PRINT SET	MFG SET	DRAWING NO	NO OF SHT	DESCRIPTION	OPTION NO/FILE DATE	REVISIONS										
			-	MODULE REVISION		A	B	C	D	E	F	H	J	J		J
		D-UA-M8553-Ø-Ø	7	1Ø/11 BUS AND DATA CONTROL		A	A	B	C	D	E	F	H	HI		HI
		D-CS-M8553-Ø-CNT1	1	DTE20 CONTROL LOGIC		-	-	A	B	B	B	B	B	BI		BI
		D-CS-M8553-Ø-CNT2	1	DTE20 CONTROL LOGIC		-	-	A	B	B	B	B	C	CI		CI
		D-CS-M8553-Ø-CNT3	1	DTE20 CONTROL LOGIC		-	-	A	A	A	A	A	A	AI		AI
		D-CS-M8553-Ø-CNT4	1	DTE20 CONTROL LOGIC		-	-	A	B	B	B	C	D	DI		DI
		D-CS-M8553-Ø-CNT5	1	DTE20 CONTROL LOGIC		-	-	A	A	A	B	B	B	BI		BI
		D-CS-M8553-Ø-CNT6	1	DTE20 CONTROL LOGIC		-	-	A	B	B	B	B	B	BI		BI
		D-CS-M8553-Ø-CNT7	1	DTE20 CONTROL LOGIC		-	-	A	A	A	A	A	A	AI		AI
		D-CS-M8553-Ø-CNT8	1	DTE20 CONTROL LOGIC		-	-	A	B	B	C	C	C	CI		CI
		D-CS-M8553-Ø-CNT9	1	DTE20 CONTROL LOGIC		-	-	A	A	A	A	A	A	AI		AI
				PWR, CAP, AND GND												
		K-CO-M8553-Ø-4	1	1Ø/11 BUS AND DATA CONTROL		D	D	D	D	D	D	D	D	D		D
		D-AH-M8553-Ø-5	4	1Ø/11 BUS AND DATA CONTROL		C	C	C	C	C	C	C	C	C		C
		B-MH-M8553-Ø-6	1	MODULE ECO HISTORY		-	A	B	C	D	E	F	H	J		J
		5010514		ETCH CIRCUIT BOARD		D	D	D	D	D	D	D	D	D		D
		PØØ-M8553-ØØ		PROCESS SHEET (REF ONLY)		-	-	-	-	-	-	-	-	-		-
														REWORK VERSION	RELAYOUT VERSION SEE SHEET 3	
					ECO NO	OPIG	00001	00002	00003	00004	00005	00006	00007	00008		MRØ1Ø

CUSTOMER PRINT SET CODES
X = PRINT OF DOCUMENT INCLUDED IN PRINT SET
C = INCLUDES ALL PRINTS INDICATED ON DOCUMENT
S = CONFIDENTIAL AUTHORIZED SIGNATURE REQUIRED

TITLE	SHEET	SIZE	CODE	NUMBER	RF
1Ø/11 BUS AND DATA CONTROL	SHEET 2 OF 3	B	DD	M8553-Ø	L

429

MR

"THIS DRAWING AND SPECIFICATIONS, HEREIN, ARE THE PROPERTY OF DIGITAL EQUIPMENT CORPORATION AND SHALL NOT BE REPRODUCED OR COPIED OR USED IN WHOLE OR IN PART AS THE BASIS FOR THE MANUFACTURE OR SALE OF ITEMS WITHOUT WRITTEN PERMISSION. COPYRIGHT © 1975 DIGITAL EQUIPMENT CORPORATION"

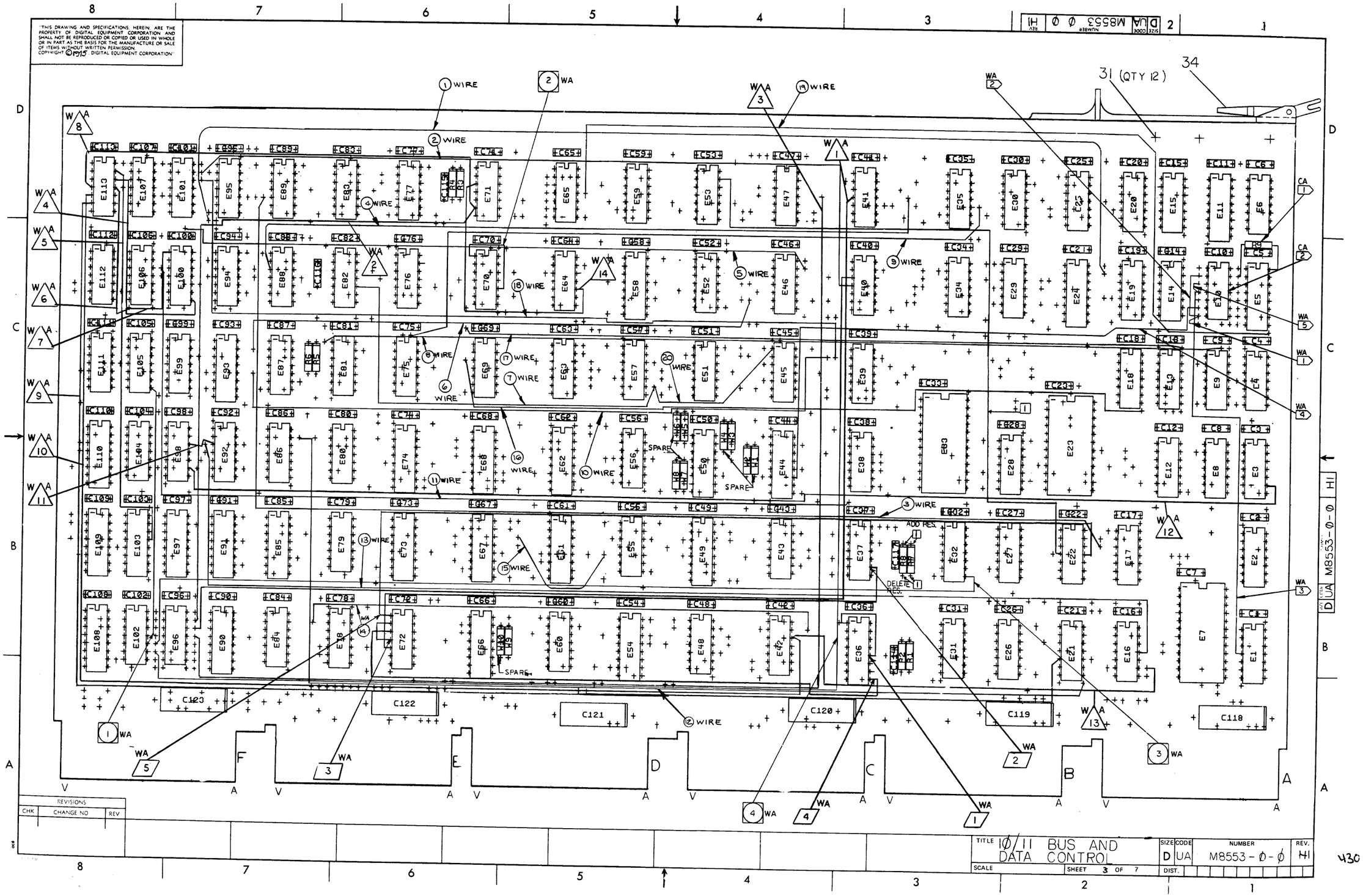

REVISIONS		
CHK	CHANGE NO	REV

TITLE Ø/11 BUS AND DATA CONTROL

SIZE D | CODE UA | NUMBER M8553-Ø-Ø | REV. H1

SCALE | SHEET 3 OF 7 | DIST.

430

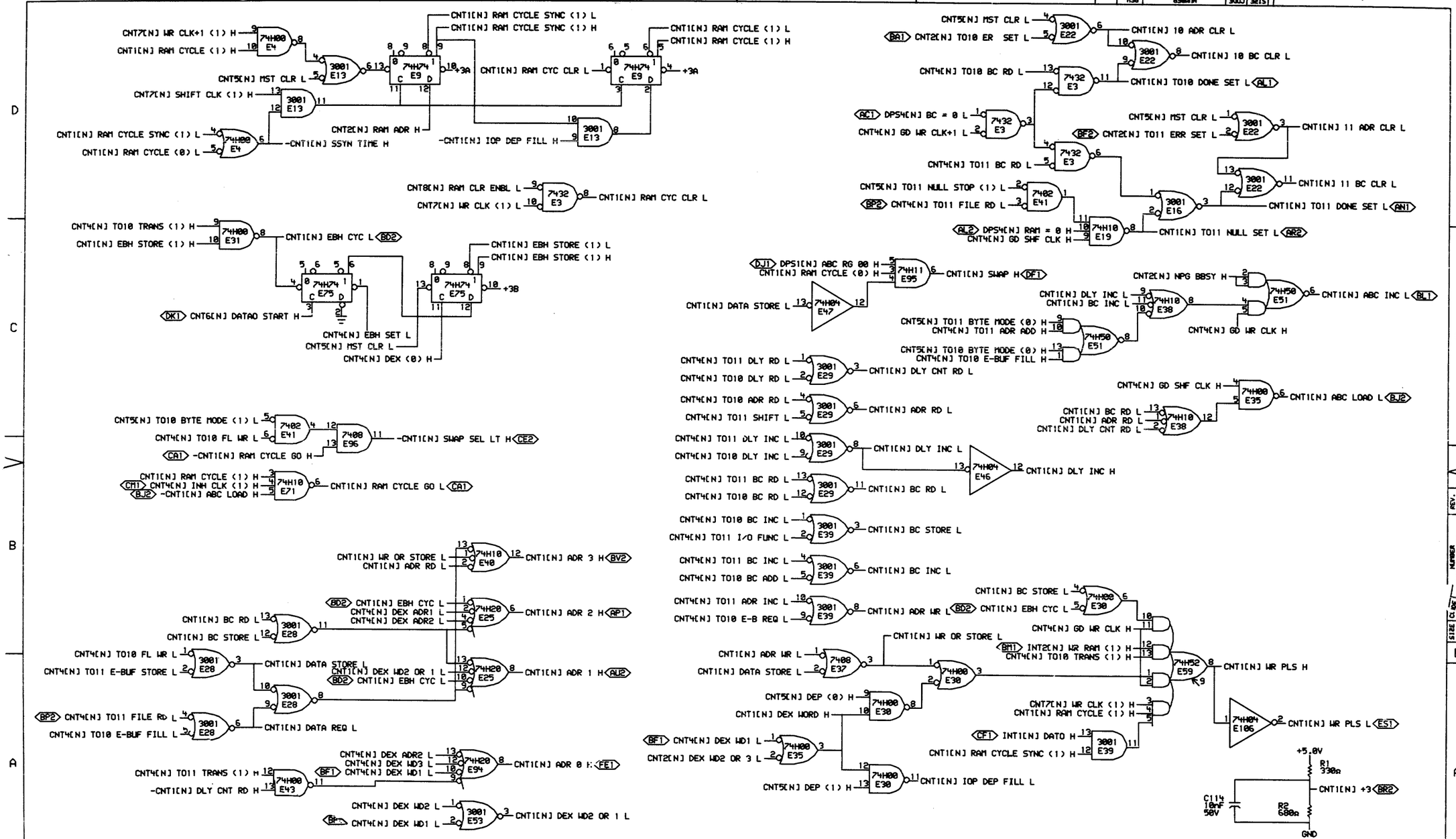

;1 OF 9

"THIS DRAWING AND SPECIFICATIONS, HEREIN, ARE THE PROPERTY OF DIGITAL EQUIPMENT CORPORATION AND SHALL NOT BE REPRODUCED OR COPIED OR USED IN WHOLE OR IN PART AS THE BASIS FOR THE MANUFACTURE OR SALE OF ITEMS WITHOUT WRITTEN PERMISSION. COPYRIGHT © 1975, DIGITAL EQUIPMENT CORPORATION"

REVISIONS		
CHK	CHANGE NO.	REV

M8553-0000 B — M8553-0000B B1 — B.BRUCKERT — B. BRUCKERT — 11-APR-77

digital

DRN. J. Fordy — DATE 08-DEC-75 — ENG. W. Bruckert — DATE 12/4/75
CHK W. Stephenson — DATE 12/9/75 — BOARD LOCATION: — SHEET 1 OF 1
CNT1X.DRW[4,426] 08-DEC-75 14:08 — NEXT HIGHER ASSEMBLY: B-DD-M8553-0
FIRST USED ON OPTION/MODEL: KL10

TITLE: DTE20 CONTROL LOGIC

SIZE	CODE	NUMBER	REV.
D	CS	M8553-0-CNT1	B1

431

SLOT 2

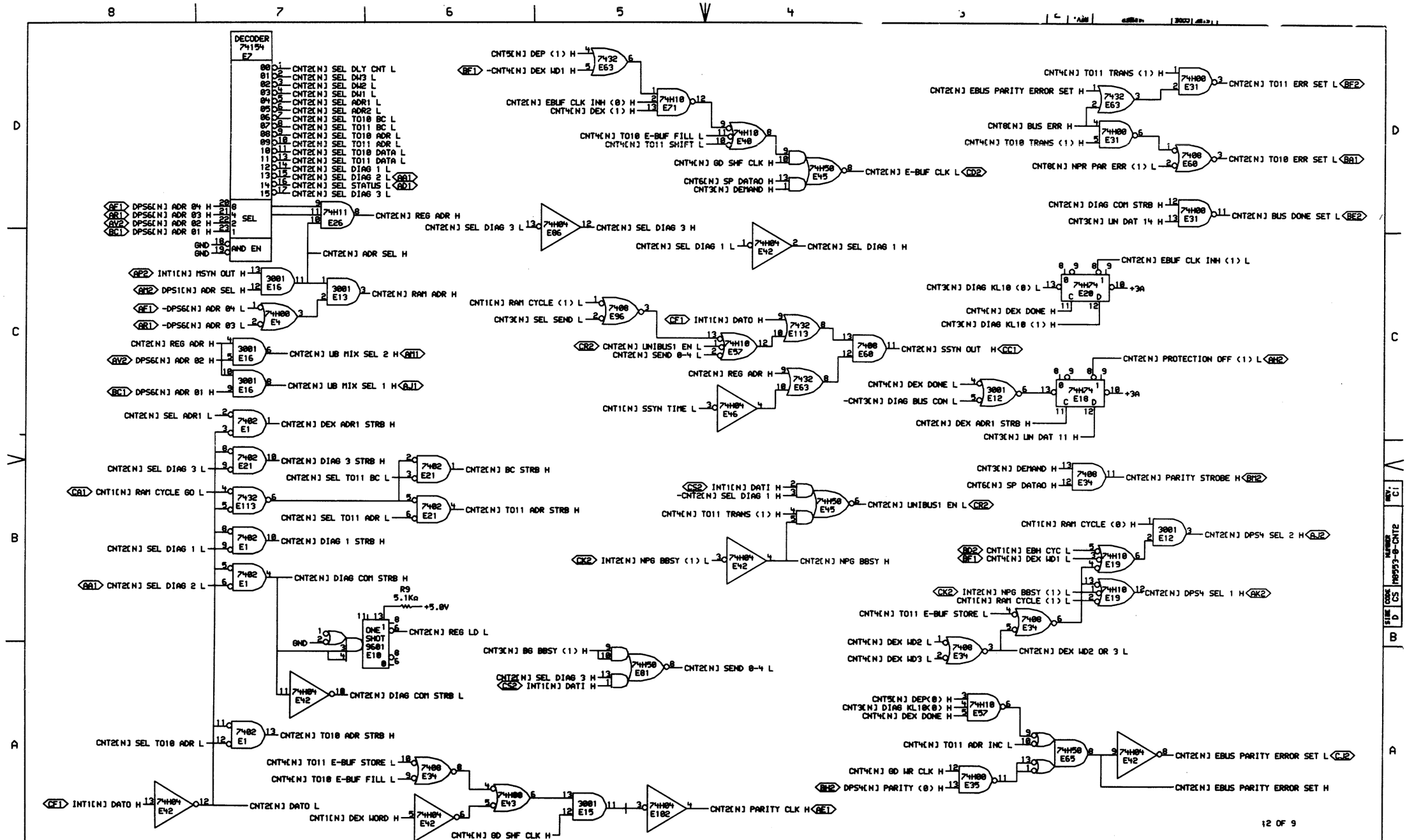

"THIS DRAWING AND SPECIFICATIONS, HEREIN, ARE THE PROPERTY OF DIGITAL EQUIPMENT CORPORATION AND SHALL NOT BE REPRODUCED OR COPIED OR USED IN WHOLE OR IN PART AS THE BASIS FOR THE MANUFACTURE OR SALE OF ITEMS WITHOUT WRITTEN PERMISSION. COPYRIGHT © 1976, DIGITAL EQUIPMENT CORPORATION"

REVISIONS			REVISIONS		
CHK	CHANGE NO.	REV	CHK	CHANGE NO.	REV
	M8553-00007	C		M8553-00008	C1
	W. BRICKER			B. BRUCKERT	

digital

DRN. W. Crosby DATE 14-DEC-76 ENG. W. Bruckert DATE 7 FEB 76
CHK'D. DATE
CNT2X.DSK(4,426) 14-DEC-76 12:45 BOARD LOCATION: SHEET 1 OF 1
FIRST USED ON OPTION-MODEL: KL10 NEXT HIGHER ASSEMBLY: B-DD-M8553-0

TITLE: DTE20 CONTROL LOGIC

SIZE	CODE	NUMBER	REV.
D	CS	M8553-0-CNT2	C1

432

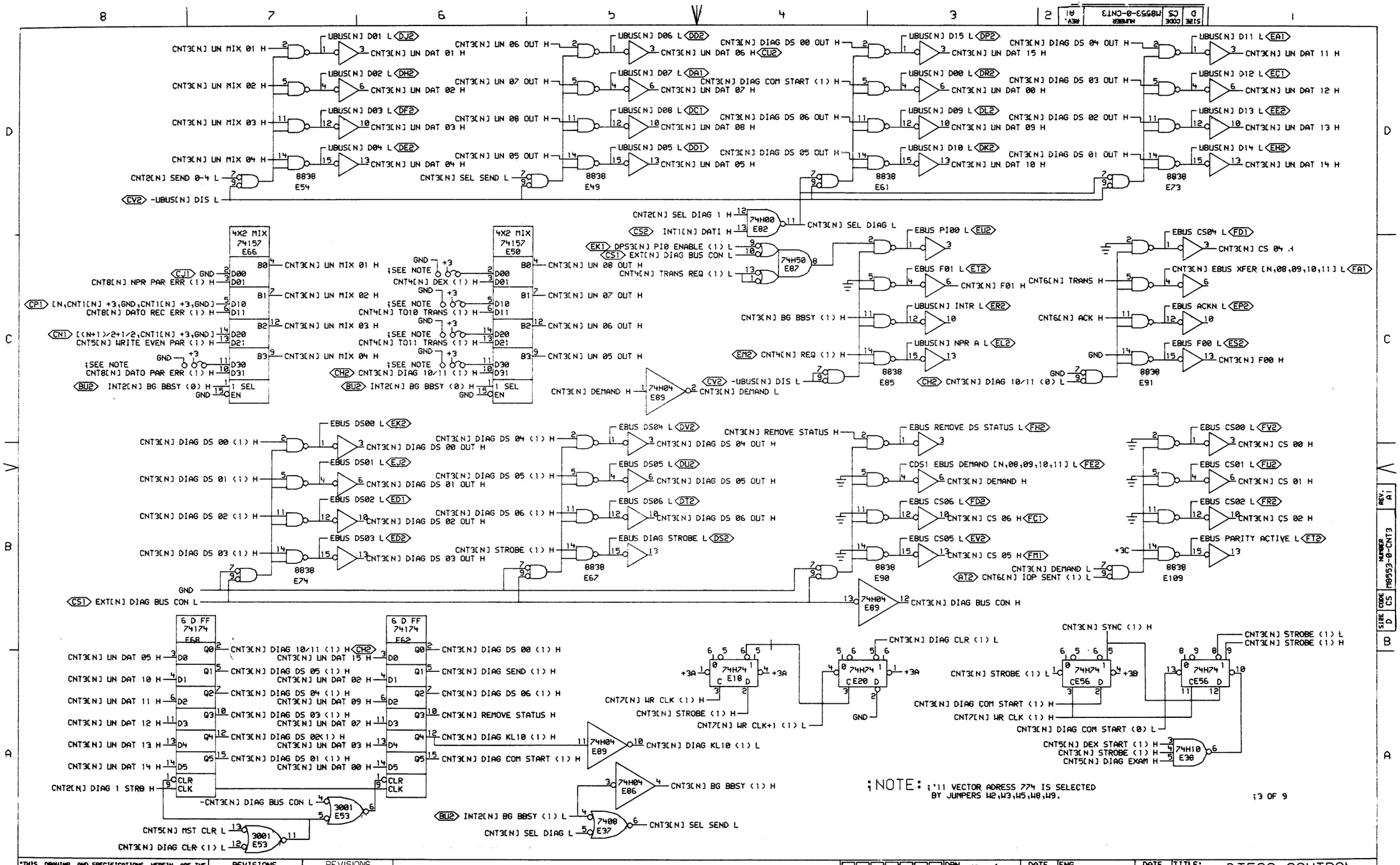

"THIS DRAWING AND SPECIFICATIONS, HEREIN, ARE THE PROPERTY OF DIGITAL EQUIPMENT CORPORATION AND SHALL NOT BE REPRODUCED OR COPIED OR USED IN WHOLE OR IN PART AS THE BASIS FOR THE MANUFACTURE OR SALE OF ITEMS WITHOUT WRITTEN PERMISSION. COPYRIGHT © 1975, DIGITAL EQUIPMENT CORPORATION"

REVISIONS			REVISIONS		
CHK	CHANGE NO.	REV	CHK	CHANGE NO.	REV
	M8553-00002	A		M8553-00003	A1
	W. BRUCKERT			W. BRUCKERT	

digital

DRN. Foosby 5/23/75 | DATE | ENG. M. Bruckert 6/5/75 | DATE
CHK'D Stephenson 5/23/75 | DATE | BOARD LOCATION:
CNT3[C4,426] 20-MAY-75 15:25 | SHEET 1 OF 1 | NEXT HIGHER ASSEMBLY:
FIRST USED ON OPTION/MODEL: KL10 | B-DD-M8553-0

TITLE: DTE20 CONTROL LOGIC

SIZE	CODE	NUMBER	REV.
D	CS	M8553-0-CNT3	A1

433

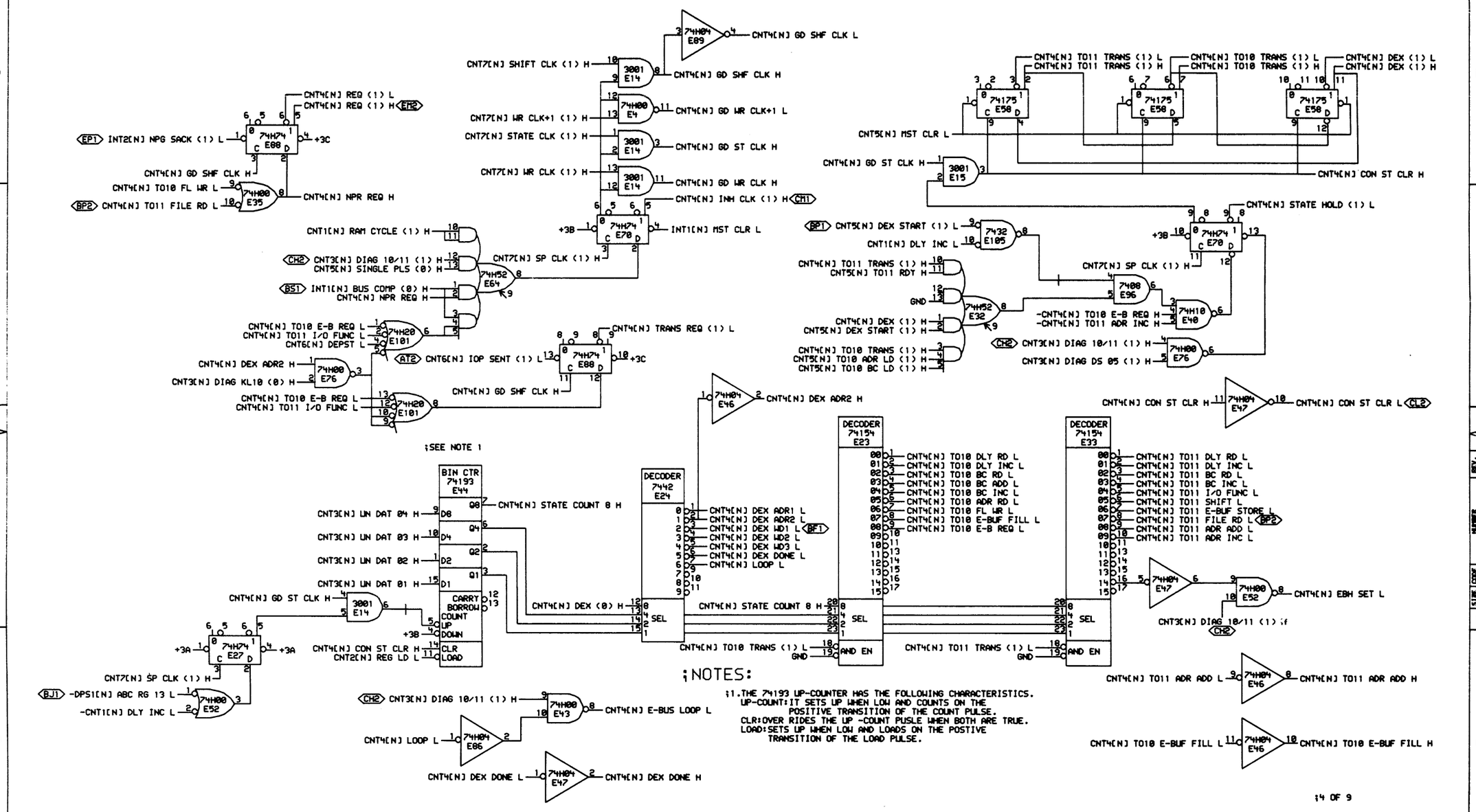

"THIS DRAWING AND SPECIFICATIONS, HEREIN, ARE THE PROPERTY OF DIGITAL EQUIPMENT CORPORATION AND SHALL NOT BE REPRODUCED OR COPIED OR USED IN WHOLE OR IN PART AS THE BASIS FOR THE MANUFACTURE OR SALE OF ITEMS WITHOUT WRITTEN PERMISSION. COPYRIGHT © 1976, DIGITAL EQUIPMENT CORPORATION"

REVISIONS		
CHK	CHANGE NO.	REV
W.B.	M8553-00007	D
W. BRUCKET		

M8553-0-CNT4 | D1

digital

DRN: J. Toomey | DATE 14-DEC-76 | ENG: W. Bruckert | DATE 17 FEB 76
CHK: | DATE 12-3-76 | BOARD LOCATION: | SHEET 1 OF 1
CNTX.DRW[4,426] | 13-DEC-76 15:21 | NEXT HIGHER ASSEMBLY: B-DD-M8553-0
FIRST USED ON OPTION/MODEL: KL10

TITLE: DTE20 CONTROL LOGIC

SIZE	CODE	NUMBER	REV
D	CS	M8553-0-CNT4	D1

434

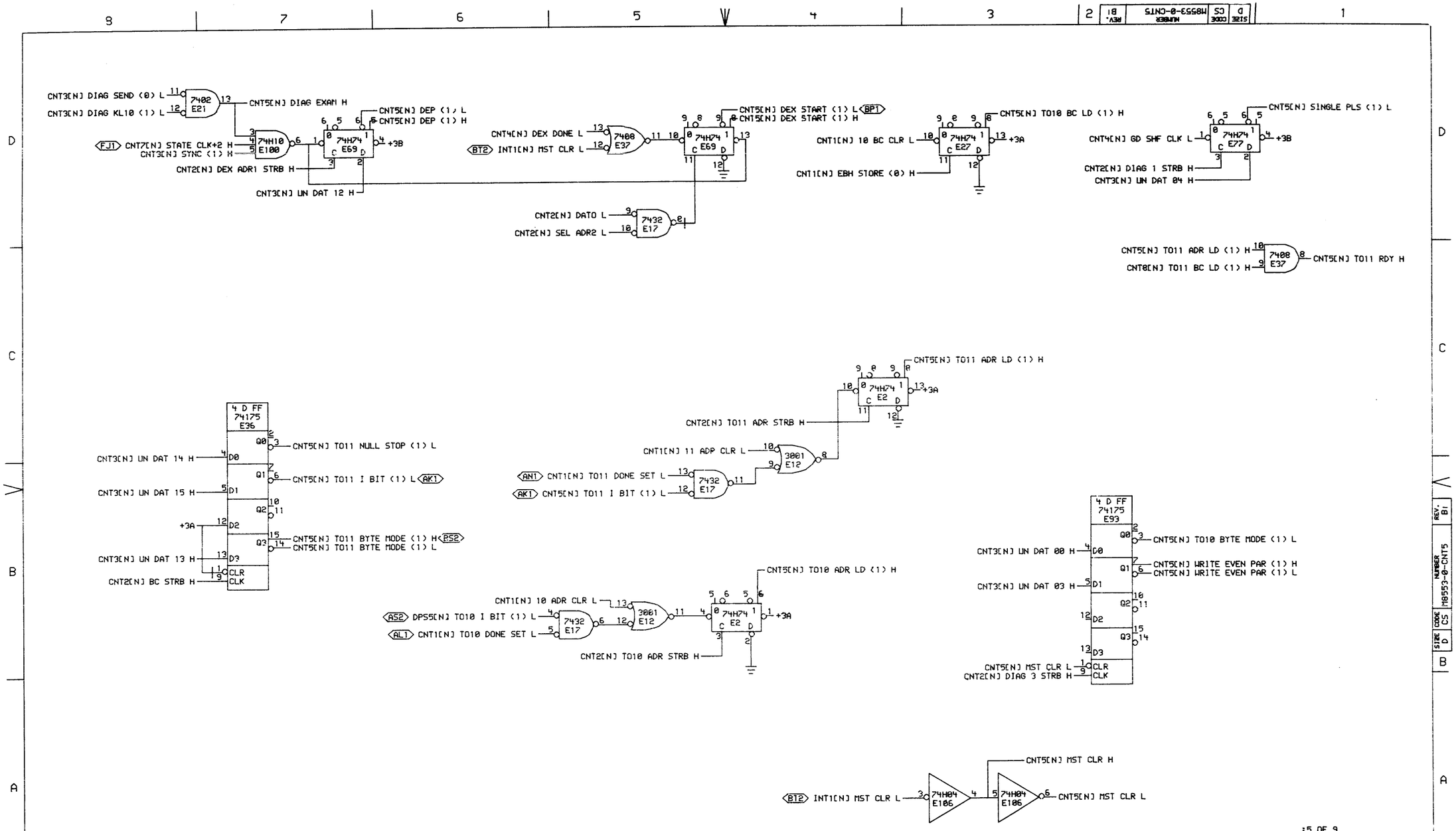

435

"THIS DRAWING AND SPECIFICATIONS, HEREIN, ARE THE PROPERTY OF DIGITAL EQUIPMENT CORPORATION AND SHALL NOT BE REPRODUCED OR COPIED OR USED IN WHOLE OR IN PART AS THE BASIS FOR THE MANUFACTURE OR SALE OF ITEMS WITHOUT WRITTEN PERMISSION.
COPYRIGHT © 1976, DIGITAL EQUIPMENT CORPORATION"

REVISIONS		
CHK	CHANGE NO.	REV
	M8553-00005	B
	M8553-00008	B1

W. BRUCKERT

digital

DRAWN: D. Loosley
CHKD: D. Stephenson

DATE	ENG.	DATE
16-JUN-76	W. Bruckert	22-JUN-76
DATE	BOARD LOCATION:	
16-JUN-76	SHEET 1 OF 1	

CNT5X.DRW[4,426] 18-JUN-76 09:00 NEXT HIGHER ASSEMBLY: B-DD-M8553-0

FIRST USED ON OPTION/MODEL: KL10

TITLE: DTE20 CONTROL LOGIC

SIZE	CODE	NUMBER	REV.
D	CS	M8553-0-CNT5	B1

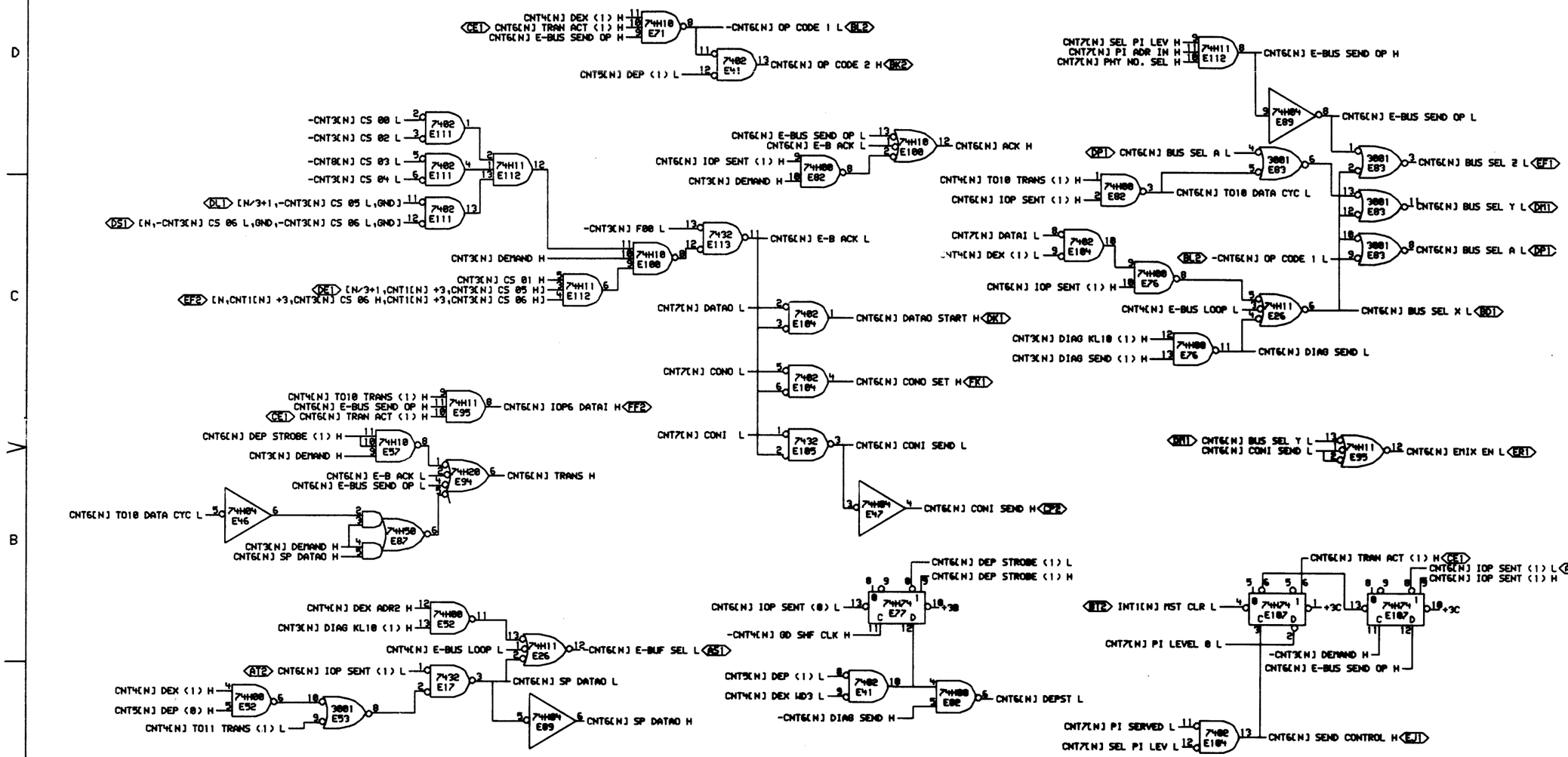

16 OF 9

"THIS DRAWING AND SPECIFICATIONS, HEREIN, ARE THE PROPERTY OF DIGITAL EQUIPMENT CORPORATION AND SHALL NOT BE REPRODUCED OR COPIED OR USED IN WHOLE OR IN PART AS THE BASIS FOR THE MANUFACTURE OR SALE OF ITEMS WITHOUT WRITTEN PERMISSION. COPYRIGHT © 1975, DIGITAL EQUIPMENT CORPORATION"

REVISIONS		
CHK	CHANGE NO.	REV

M8553-00003	B	M8553-00008	B1
B.BRUCKERT		W BRUCKERT	

digital

DRN. | DATE 08-DEC-75 | ENG. | DATE 12/4/75
CHK. | DATE 08-DEC-75 14:18 | BOARD LOCATION: SHEET OF
CHK. DRW. | NEXT HIGHER ASSEMBLY: B-DD-M8553-0
FIRST USED ON OPTION/MODEL: KL10

TITLE: DTE20 CONTROL LOGIC

SIZE	CODE	NUMBER	REV.
D	CS	M8553-0-CNT6	B1

436

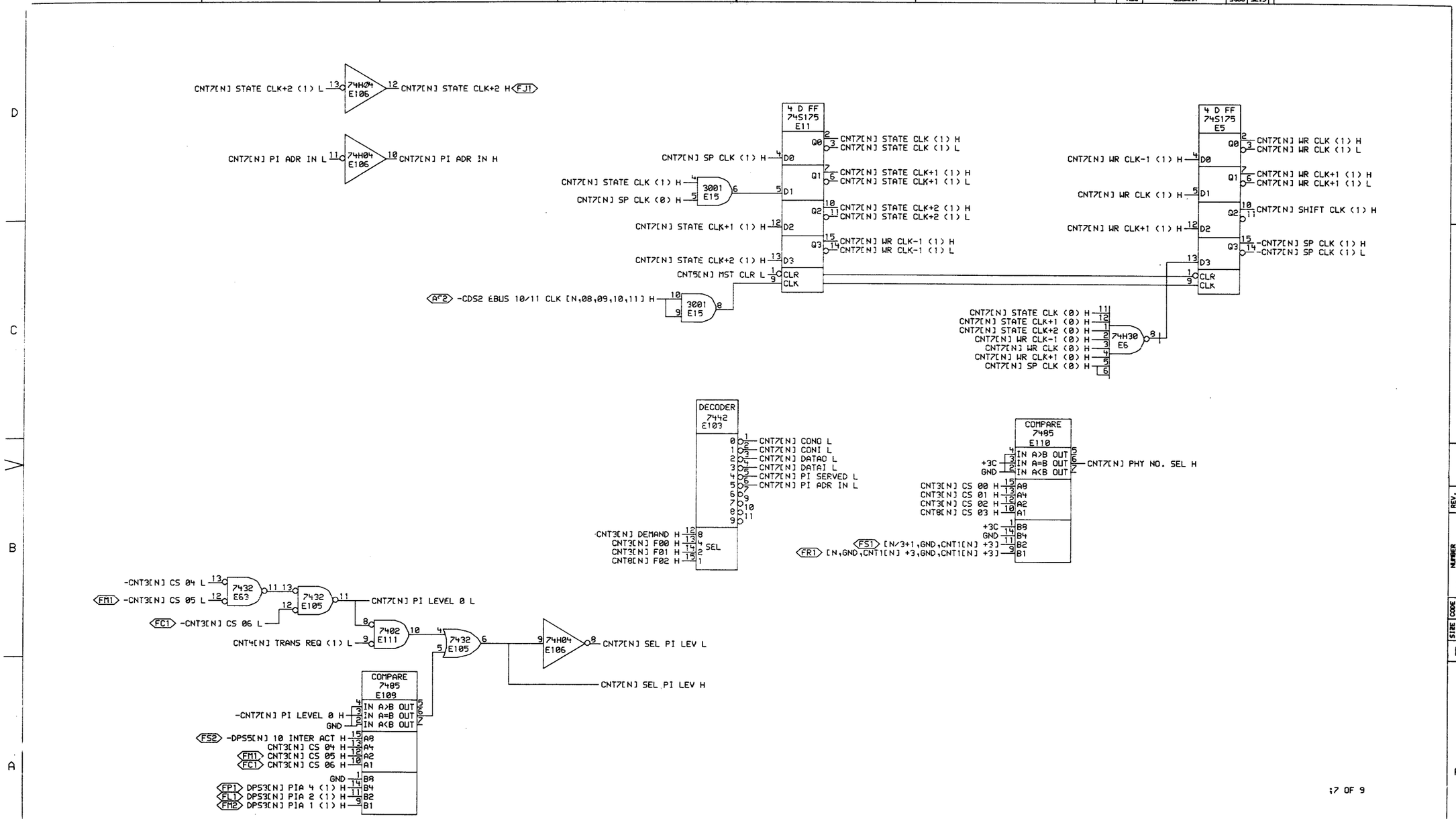

"THIS DRAWING AND SPECIFICATIONS, HEREIN, ARE THE PROPERTY OF DIGITAL EQUIPMENT CORPORATION AND SHALL NOT BE REPRODUCED OR COPIED OR USED IN WHOLE OR IN PART AS THE BASIS FOR THE MANUFACTURE OR SALE OF ITEMS WITHOUT WRITTEN PERMISSION. COPYRIGHT © 1975, DIGITAL EQUIPMENT CORPORATION"

REVISIONS				
CH$	CHANGE NO.	REV	M8553-00008	A1
	M8553-00002	A	W. BRUCKER	
	W. BRUCKER			

digital

DRN Fomby DATE 5/23/75 ENG. W. Bruckert DATE 6/5/75
CHK Hughes DATE 5/23/75 BOARD LOCATION:
SHEET 1 OF 1
CNT7XC[4,426] 22-MAY-75 15:34 NEXT HIGHER ASSEMBLY:
FIRST USED ON OPTION/MODEL: KL10 B-DD-M8553-0

TITLE: DTE20 CONTROL LOGIC

SIZE	CODE	NUMBER	REV.
D	CS	M8553-0-CNT7	A1

437

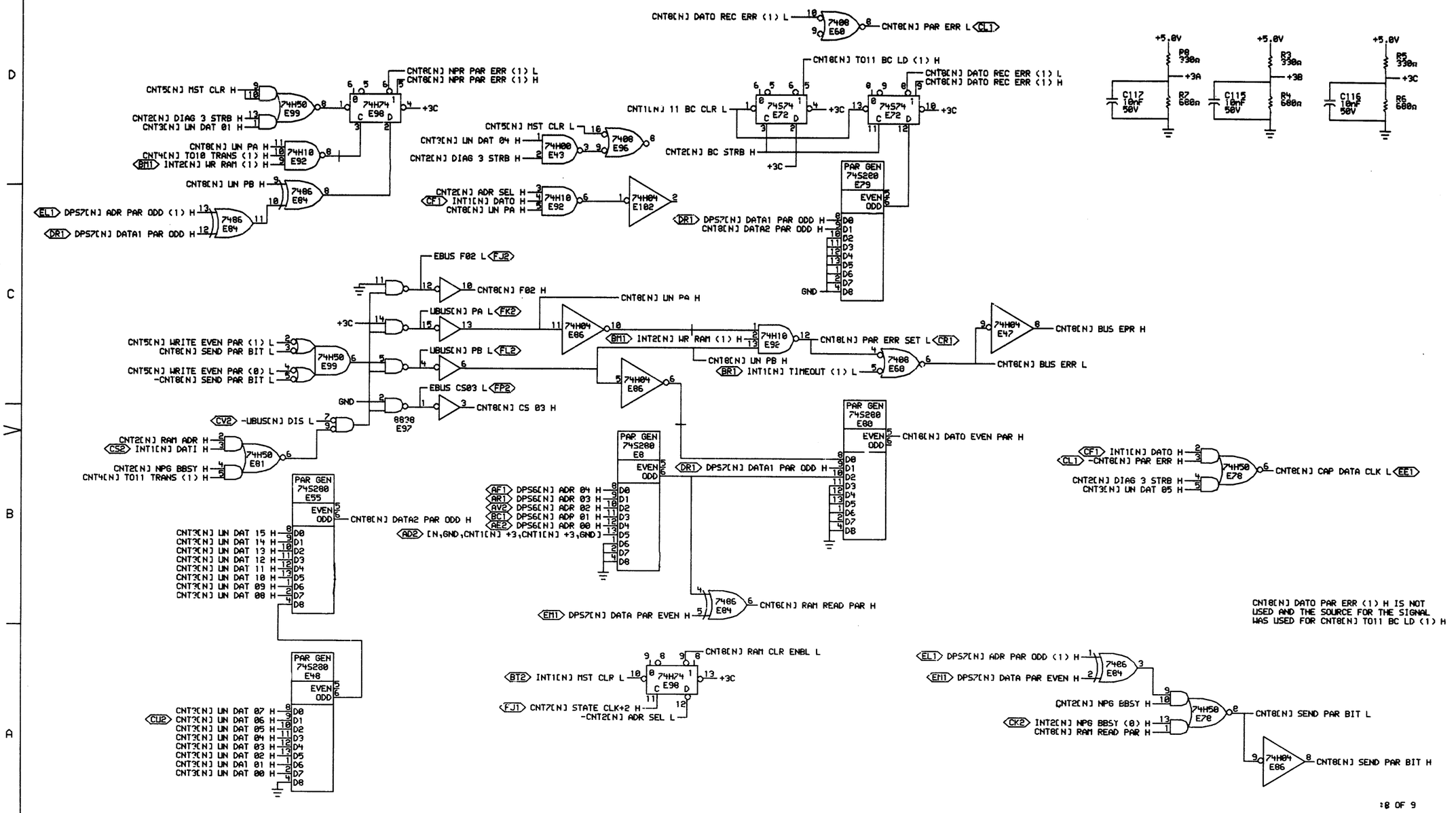

"THIS DRAWING AND SPECIFICATIONS, HEREIN, ARE THE PROPERTY OF DIGITAL EQUIPMENT CORPORATION AND SHALL NOT BE REPRODUCED OR COPIED OR USED IN WHOLE OR IN PART AS THE BASIS FOR THE MANUFACTURE OR SALE OF ITEMS WITHOUT WRITTEN PERMISSION. COPYRIGHT © 1976, DIGITAL EQUIPMENT CORPORATION"

REVISIONS			M8553-00008 C1
CHK	CHANGE NO.	REV	W. BRUCKET 1/6/77
	M8553-00005	C	W. BRUCKERT 12-APR-77
W. BRUCKERT 7-12-76			

digital	DRN.	DATE 16-JUN-76	ENG.	DATE 22 JUN 76	TITLE: DTE20 CONTROL LOGIC
	CHK	DATE	BOARD LOCATION: SHEET 1 OF 1		
CNT8X.DRW[4,426]	16-JUN-76 09:02	NEXT HIGHER ASSEMBLY:			SIZE D / CODE CS / NUMBER M8553-0-CNT8 / REV. C1
FIRST USED ON OPTION/MODEL: KL10		B-DD-M8553-0			

438

"PECIFICATIONS, HEREIN, ARE THE
'IPMENT CORPOR.TION A.D SHALL
ED OR USED IN WH LE OR IN
THE MANUFACTURE OR SALE OF
ISSION.
EQUIPMENT CORPORATION'

REVISIONS			
CHK	CH-GE NO.	REV	
	M8553-00002	A	
W. BRUCKERT			

M8553-00008 A1
W. BRUCKET

digital

DRN: S. Foonly DATE 5/23/75
CHK'D: Stephens DATE 5/23/75
ENG: W. Bruckert DATE 6/5/75
BOARD LOCATION:
SHEET 1 OF 1
CNT9EX[4,-26] 20-MAY-75 15:36
NEXT HIGHER ASSEMBLY:
FIRST USED ON OPTION/MODEL: KL10 B-DD-M8553-0

TITLE: DTE20 CNTRL LOGIC PWR, CAP, AND GND

SIZE	CODE	NUMBER	REV.
D	CS	M8553-0-CNT9	A1

439

REVISION CONTROL SHEET

CUSTOMER PRINT SET	MFG SET	DRAWING NO	NO OF SHT	DESCRIPTION	OPTION NO/FILE DATE	REVISIONS NEW	LAYOUT	VERSION
			-	MODULE REVISION		K	L	L
		D-UA-M8553-Ø-Ø	7	1Ø/11 BUS AND DATA CONTROL		J	K	K
		D-CS-M8553-Ø-CNT1	1	DTE20 CONTROL LOGIC		C	C	C
		D-CS-M8553-Ø-CNT2	1	DTE20 CONTROL LOGIC		D	E	E
		D-CS-M8553-Ø-CNT3	1	DTE20 CONTROL LOGIC		B	B	B
		D-CS-M8553-Ø-CNT4	1	DTE20 CONTROL LOGIC		E	E	E
		D-CS-M8553-Ø-CNT5	1	DTE20 CONTROL LOGIC		C	C	C
		D-CS-M8553-Ø-CNT6	1	DTE20 CONTROL LOGIC		C	C	C
		D-CS-M8553-Ø-CNT7	1	DTE20 CONTROL LOGIC		B	B	B
		D-CS-M8553-Ø-CNT8	1	DTE20 CONTROL LOGIC		D	D	D
		D-CS-M8553-Ø-CNT9	1	DTE20 CONTROL LOGIC		B	C	C
				PWR, CAP, AND GND				
		K-PC-M8553-O-DBC	1	P.C. DESIGN DATA BASE		E	E	F
		D-AH-M8553-Ø-5	4	1Ø/11 BUS AND DATA CONTROL		D	D	D
		B-MH-M8553-Ø-6	1	MODULE ECO HISTORY		REF	REF	REF
		5010514	-	ETCH CIRCUIT BOARD		E	E	E
		P00-M8553-ØØ		PROCESS SHEET (REF ONLY)		-	-	-

CUSTOMER PRINT SET CODES
X = PRINT OF DOCUMENT INCLUDED IN PRINT SET
C = INCLUDES ALL PRINTS INDICATED ON DOCUMENT
S = CONFIDENTIAL AUTHORIZED SIGNATURE REQUIRED

ECO NO			
	00008	00009	MRØ1Ø

TITLE		SIZE	CODE	NUMBER	REV
1Ø/11 BUS AND DATA CONTROL	SHEET 3 OF 3	B	DD	M8553-Ø	L

MR

"THIS DRAWING AND SPECIFICATIONS, HEREIN, ARE THE PROPERTY OF DIGITAL EQUIPMENT CORPORATION AND SHALL NOT BE REPRODUCED OR COPIED OR USED IN WHOLE OR IN PART AS THE BASIS FOR THE MANUFACTURE OR SALE OF ITEMS WITHOUT WRITTEN PERMISSION. COPYRIGHT © 1972 DIGITAL EQUIPMENT CORPORATION"

REVISIONS		
CHK	CHANGE NO	REV

TITLE	SIZE	CODE	NUMBER	REV.
10/11 BUS AND DATA CONTROL	D	UA	M8553-0-0	K
SCALE 2/1	SHEET 2 OF 5	DIST.		

441

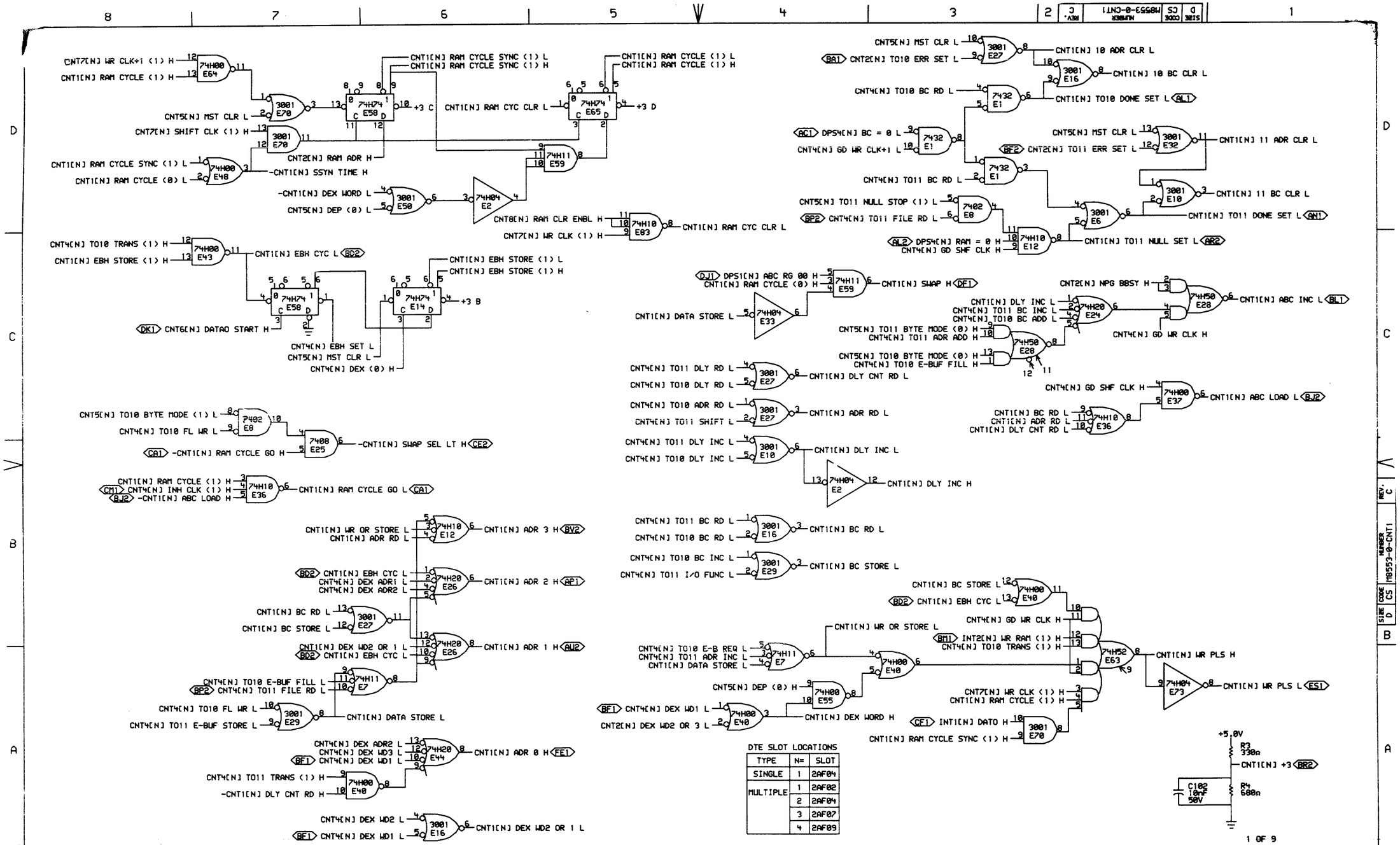

DTE SLOT LOCATIONS

TYPE	N=	SLOT
SINGLE	1	2AF04
MULTIPLE	1	2AF02
	2	2AF04
	3	2AF07
	4	2AF09

"THIS DRAWING AND SPECIFICATIONS, HEREIN, ARE THE PROPERTY OF DIGITAL EQUIPMENT CORPORATION AND SHALL NOT BE REPRODUCED OR COPIED OR USED IN WHOLE OR IN PART AS THE BASIS FOR THE MANUFACTURE OR SALE OF ITEMS WITHOUT WRITTEN PERMISSION.
COPYRIGHT © 1977, DIGITAL EQUIPMENT CORPORATION"

REVISIONS		
CHK	CHANGE NO.	REV

M8553-0-CNT1 C
W. BRUCKERT

digital

DRN. J. Toomey DATE 23-FEB-77
CHKD. DATE 6/22/77
CNT1EE.DRW[4,614] 08-FEB-77 16:54
FIRST USED ON OPTION/MODEL: KL10
ENG. DATE 23-FEB-77
BOARD LOCATION:
SHEET 1 OF 1
NEXT HIGHER ASSEMBLY: B-DD-M8553-0

TITLE: DTE20 CONTROL LOGIC

SIZE	CODE	NUMBER	REV.
D	CS	M8553-0-CNT1	C

442

M/R

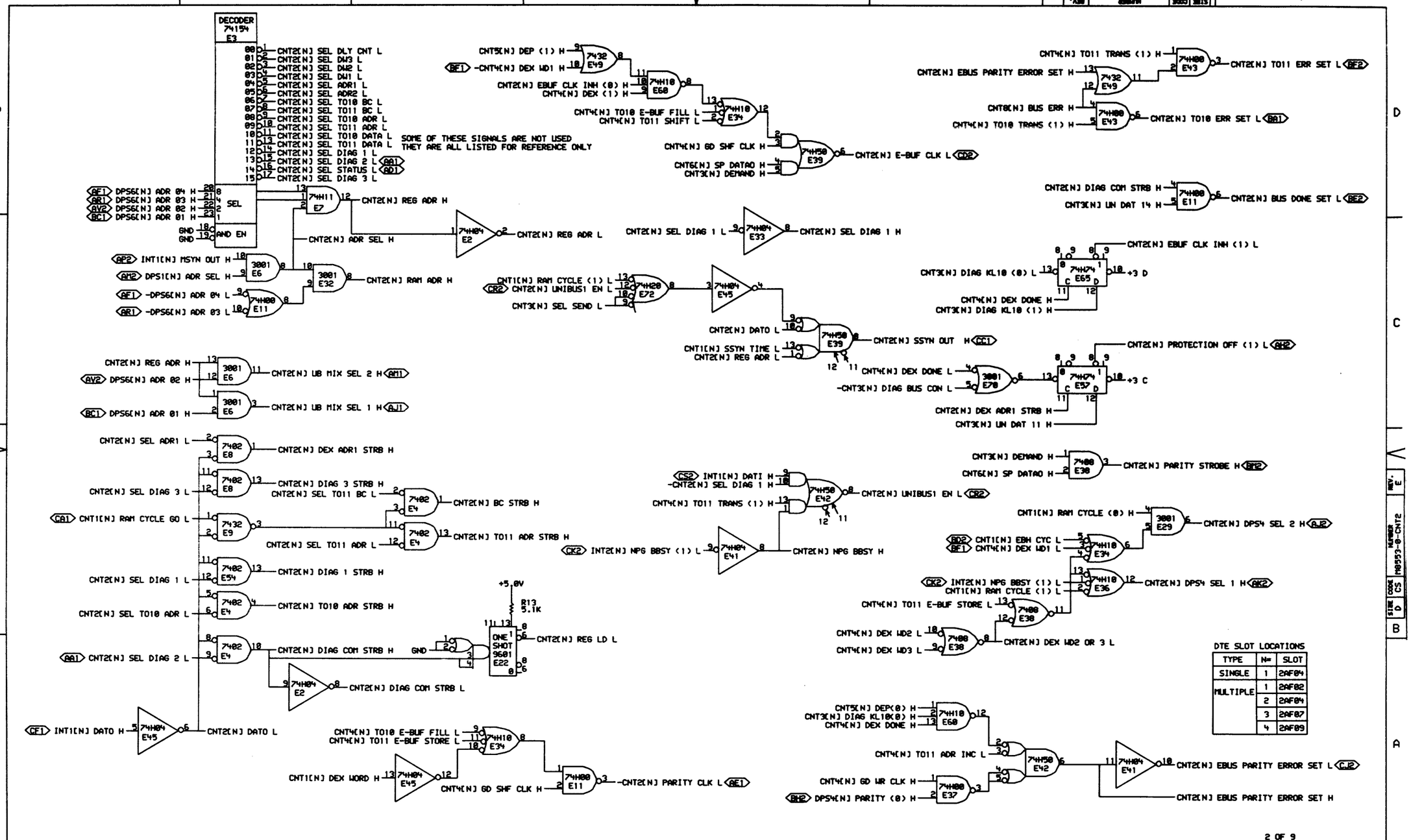

"THIS DRAWING AND SPECIFICATIONS, HEREIN, ARE THE PROPERTY OF DIGITAL EQUIPMENT CORPORATION AND SHALL NOT BE REPRODUCED OR COPIED OR USED IN WHOLE OR IN PART AS THE BASIS FOR THE MANUFACTURE OR SALE OF ITEMS WITHOUT WRITTEN PERMISSION. COPYRIGHT © 1977, DIGITAL EQUIPMENT CORPORATION"

REVISIONS		
CHK	CHANGE NO.	REV
—	M8553-00008	E
	W. BRICKETT	

digital

DRN. M. Zamby DATE 07-JUN-77 ENG. DATE
CHK. M. Walker DATE 3/7/77 BOARD LOCATION: SHEET 1 OF 1
CNT2EE.DRUK4,614 07-JUN-77 06:30 NEXT HIGHER ASSEMBLY:
FIRST USED ON OPTION/MODEL: KL10 B-DD-M8553-0

TITLE: DTE20 CONTROL LOGIC

SIZE	CODE	NUMBER	REV.
D	CS	M8553-0-CNT2	E

443

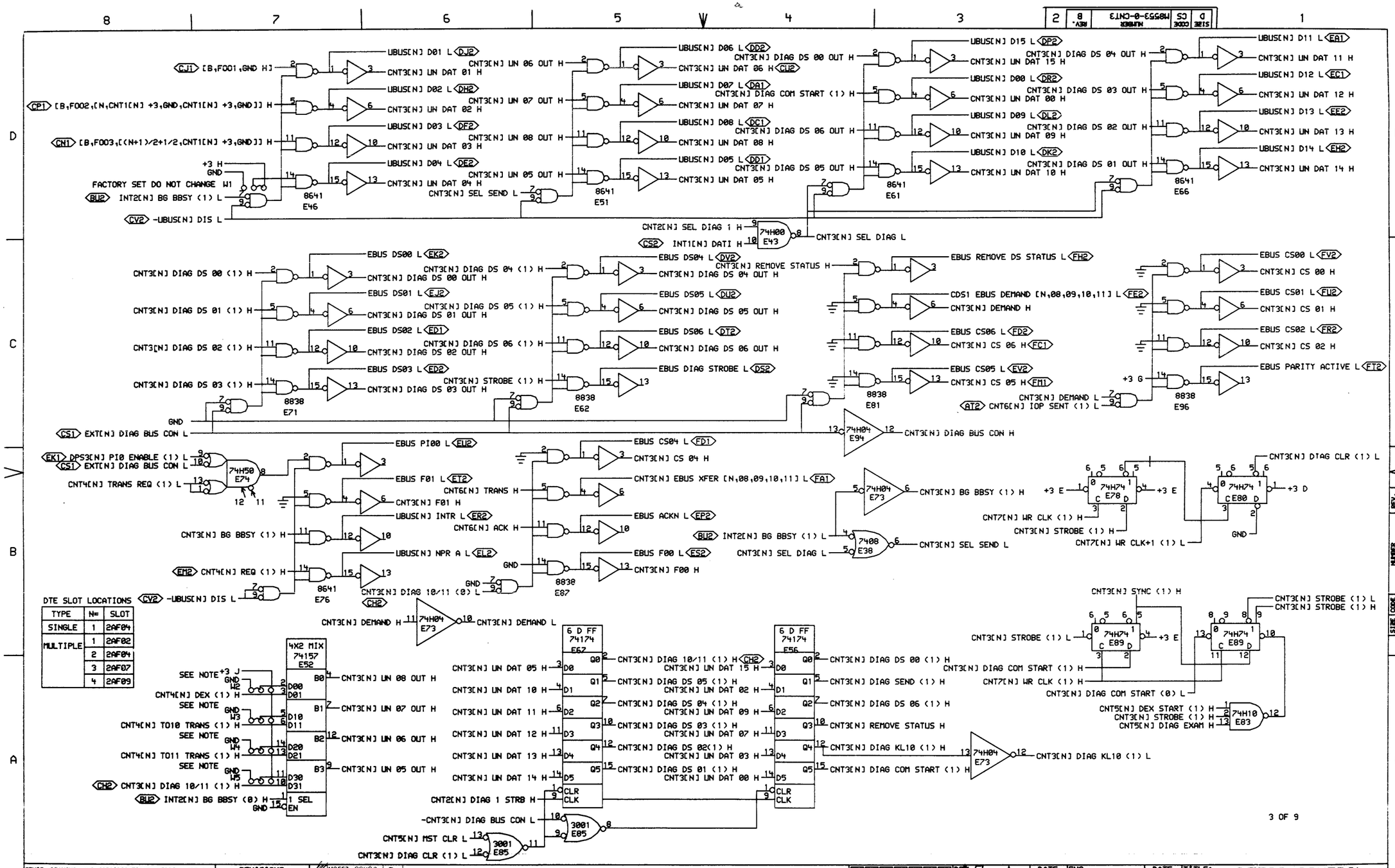

DTE SLOT LOCATIONS

TYPE	N=	SLOT
SINGLE	1	2AF04
MULTIPLE	1	2AF02
	2	2AF04
	3	2AF07
	4	2AF09

"THIS DRAWING AND SPECIFICATIONS, HEREIN, ARE THE PROPERTY OF DIGITAL EQUIPMENT CORPORATION AND SHALL NOT BE REPRODUCED OR COPIED OR USED IN WHOLE OR IN PART AS THE BASIS FOR THE MANUFACTURE OR SALE OF ITEMS WITHOUT WRITTEN PERMISSION. COPYRIGHT © 1977, DIGITAL EQUIPMENT CORPORATION"

REVISIONS		
CHK	CHANGE NO.	REV

M8553-00008 B
W. BRUCKERT

digital

DRN. DATE 10-FEB-77 ENG. DATE 23-FEB-77
CHK. DATE 2/11/77 BOARD LOCATION: SHEET 1 OF 1
CNT3EE.DRW[4,614] 10-FEB-77 10:57 NEXT HIGHER ASSEMBLY:
FIRST USED ON OPTION/MODEL: KL10 B-DD-M8553-0

TITLE: DTE20 CONTROL LOGIC

SIZE	CODE	NUMBER	REV.
D	CS	M8553-0-CNT3	B

444

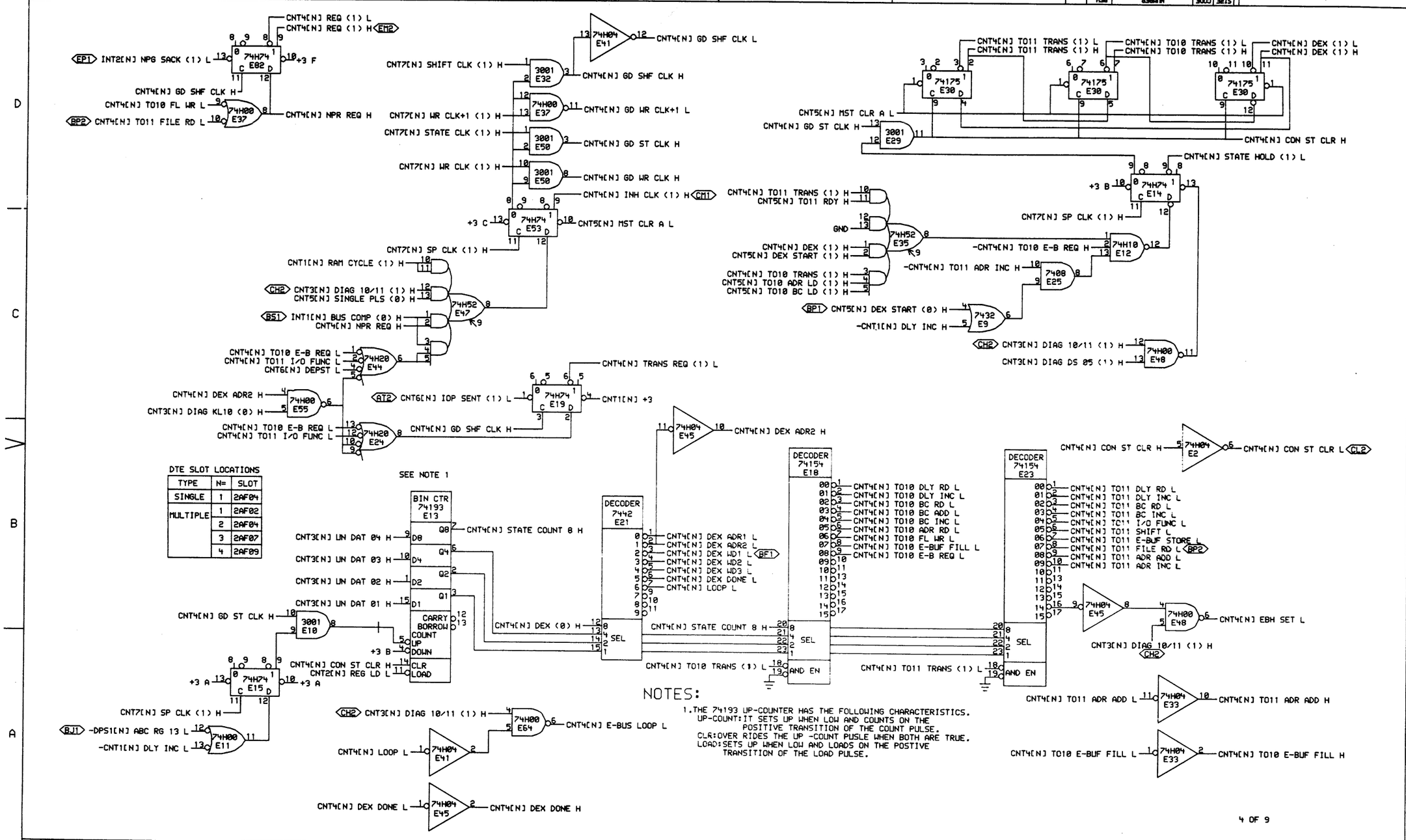

"THIS DRAWING AND SPECIFICATIONS, HEREIN, ARE THE PROPERTY OF DIGITAL EQUIPMENT CORPORATION AND SHALL NOT BE REPRODUCED OR COPIED OR USED IN WHOLE OR IN PART AS THE BASIS FOR THE MANUFACTURE OR SALE OF ITEMS WITHOUT WRITTEN PERMISSION. COPYRIGHT © 1977, DIGITAL EQUIPMENT CORPORATION"

REVISIONS		
CHK	CHANGE NO.	REV

M8553-0-CNT4 E
W. BRUCKERT

digital

DRN. L. Toomey
CHK'D. Fabiano
DATE 14-FEB-77
DATE 2/4/77
ENG. W. Bruckert
DATE 23FEB77
BOARD LOCATION:
SHEET 1 OF 1
CNT4EE.DRW[4,614] 14-FEB-77 09:29
NEXT HIGHER ASSEMBLY: B-DD-M8553-0
FIRST USED ON OPTION/MODEL: KL10

TITLE: DTE20 CONTROL LOGIC

SIZE	CODE	NUMBER	REV.
D	CS	M8553-0-CNT4	E

445

MR

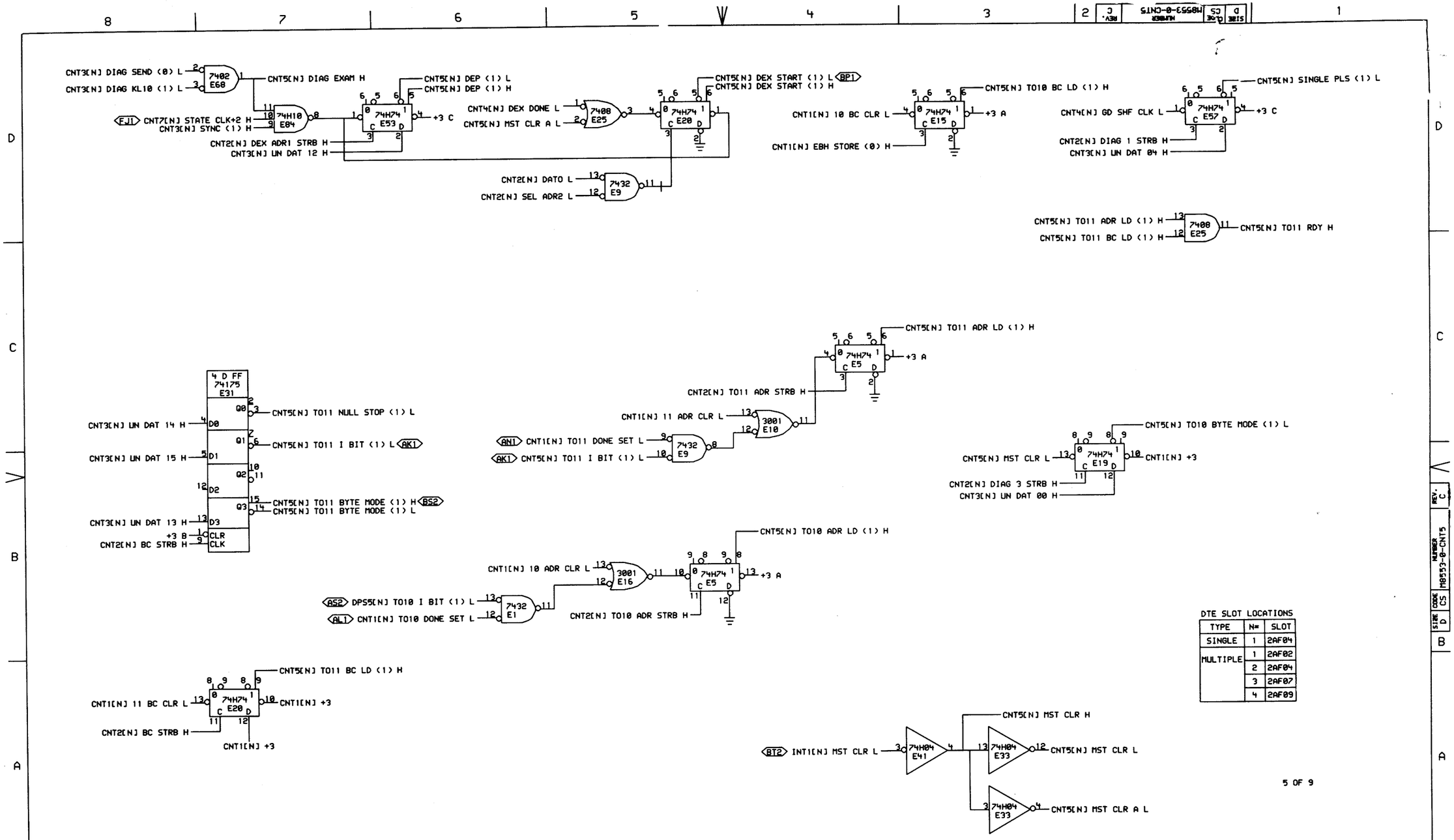

DTE SLOT LOCATIONS

TYPE	N=	SLOT
SINGLE	1	2AF04
MULTIPLE	1	2AF02
	2	2AF04
	3	2AF07
	4	2AF09

5 OF 9

"THIS DRAWING AND SPECIFICATIONS, HEREIN, ARE THE PROPERTY OF DIGITAL EQUIPMENT CORPORATION AND SHALL NOT BE REPRODUCED OR COPIED OR USED IN WHOLE OR IN PART AS THE BASIS FOR THE MANUFACTURE OR SALE OF ITEMS WITHOUT WRITTEN PERMISSION.
COPYRIGHT © 1977, DIGITAL EQUIPMENT CORPORATION"

REVISIONS		
CHK	CHANGE NO.	REV

M8553-00008 C
W. BRUCKERT

CNT5EE.DRW[4,6143] 09-FEB-77 13:40
FIRST USED ON OPTION/MODEL: KL10

DRN. DATE 10-FEB-77 ENG. DATE 23FEB77
CHK DATE 2/11/77
BOARD LOCATION:
SHEET 1 OF 1
NEXT HIGHER ASSEMBLY: B-DD-M8553-0

TITLE: DTE20 CONTROL LOGIC

SIZE	CODE	NUMBER	REV.
D	CS	M8553-0-CNT5	C

440

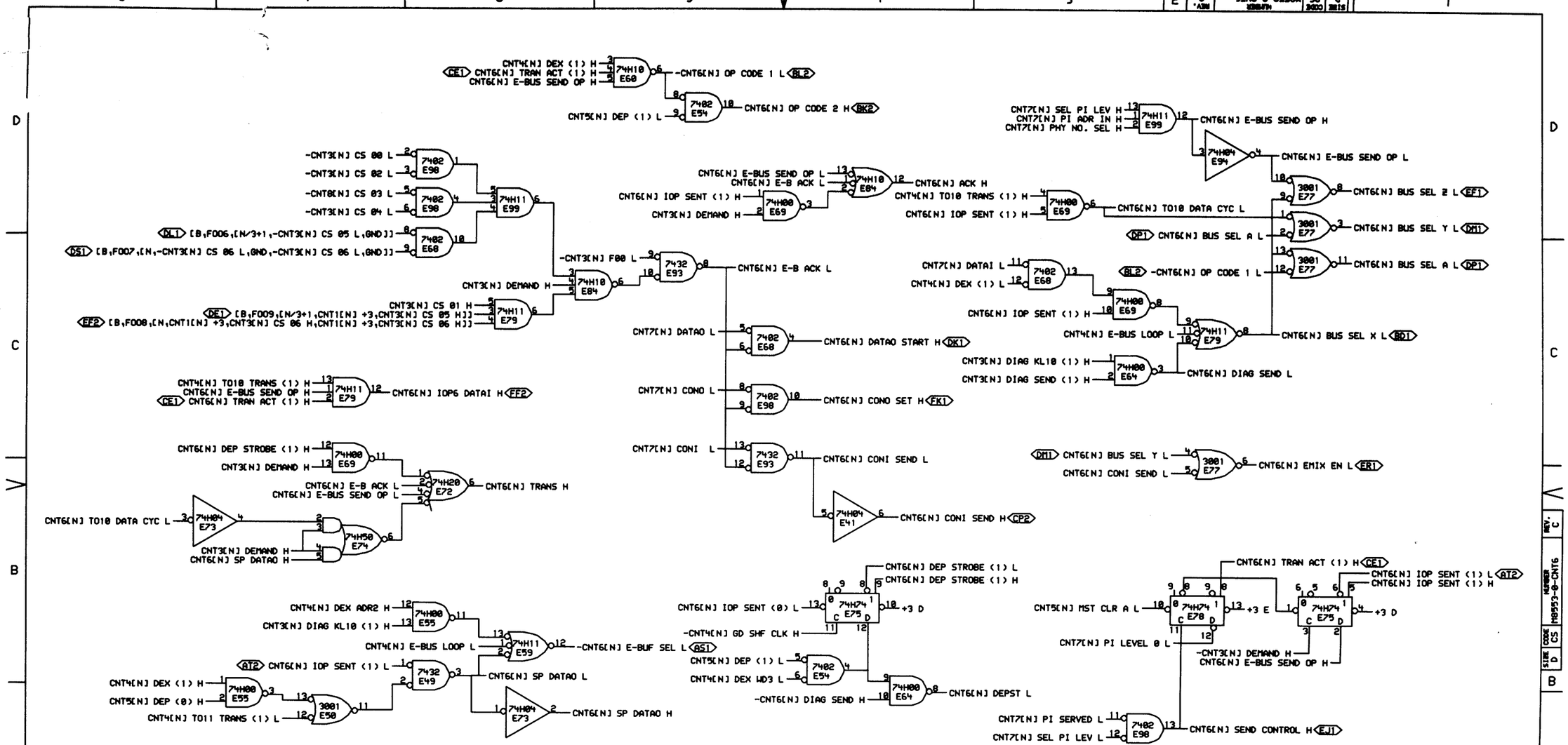

DTE SLOT LOCATIONS

TYPE	N=	SLOT
SINGLE	1	2AF04
MULTIPLE	1	2AF02
	2	2AF04
	3	2AF07
	4	2AF09

6 OF 9

"THIS DRAWING AND SPECIFICATIONS, HEREIN, ARE THE PROPERTY OF DIGITAL EQUIPMENT CORPORATION AND SHALL NOT BE REPRODUCED OR COPIED OR USED IN WHOLE OR IN PART AS THE BASIS FOR THE MANUFACTURE OR SALE OF ITEMS WITHOUT WRITTEN PERMISSION. COPYRIGHT © 1977, DIGITAL EQUIPMENT CORPORATION"

REVISIONS		
CHK	CHANGE NO.	REV

M8553 - 00008 C
W. BRUCKERT

digital

DRN. J. Loosley DATE 10-FEB-77
CHK'D. Wilkerson DATE 11/77
ENG. W. Bruckert DATE 23 FEB 77
BOARD LOCATION:
SHEET 1 OF 1
CNT6EE.DRW[4,614] 10-FEB-77 13:41
NEXT HIGHER ASSEMBLY: B-DD-M8553-0
FIRST USED ON OPTION/MODEL: KL10

TITLE: DTE20 CONTROL LOGIC

SIZE	CODE	NUMBER	REV.
D	CS	M8553-0-CNT6	C

447

MR

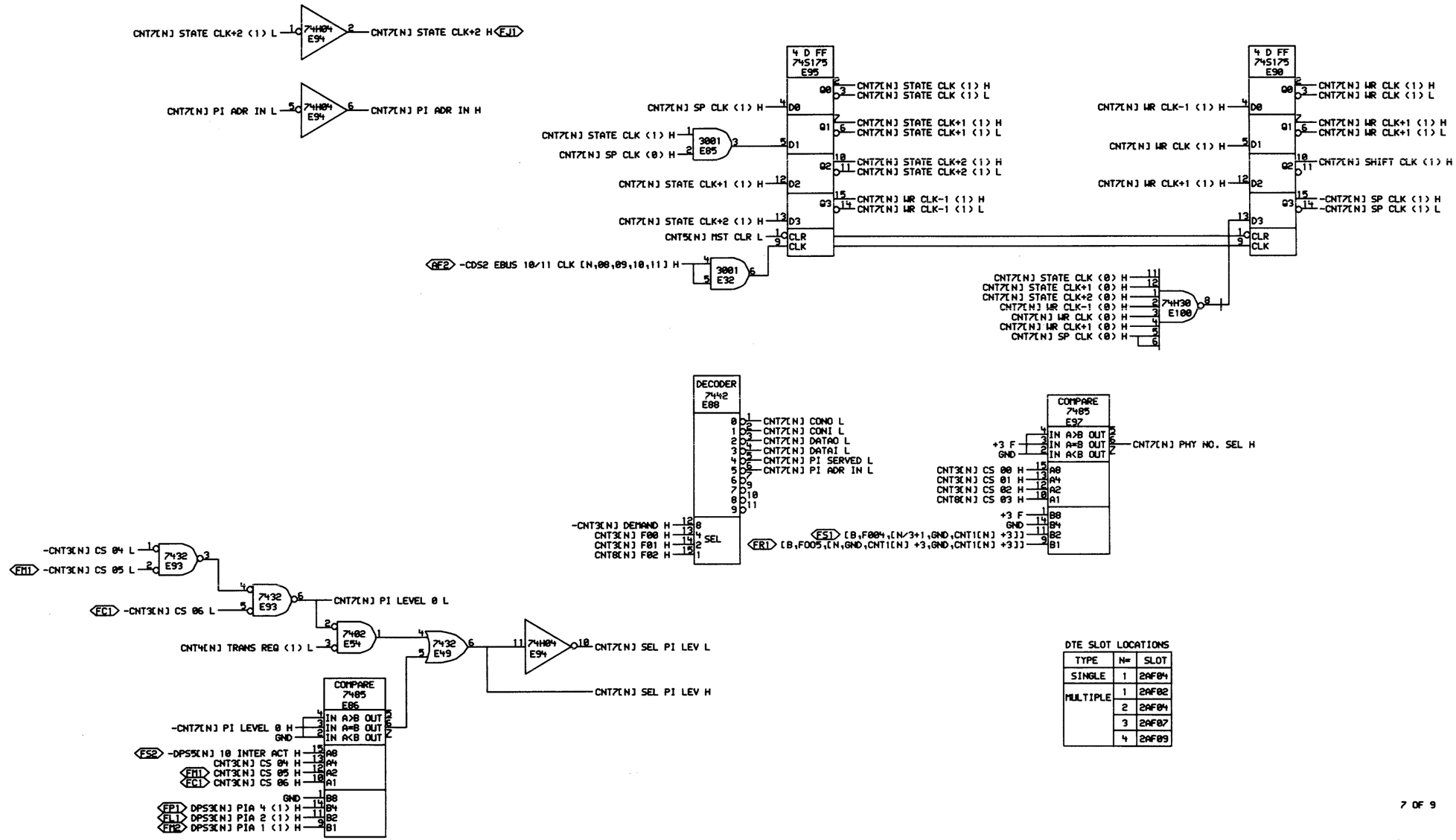

DTE SLOT LOCATIONS

TYPE	N=	SLOT
SINGLE	1	2AF04
MULTIPLE	1	2AF02
	2	2AF04
	3	2AF07
	4	2AF09

7 OF 9

"THIS DRAWING AND SPECIFICATIONS, HEREIN, ARE THE PROPERTY OF DIGITAL EQUIPMENT CORPORATION AND SHALL NOT BE REPRODUCED OR COPIED OR USED IN WHOLE OR IN PART AS THE BASIS FOR THE MANUFACTURE OR SALE OF ITEMS WITHOUT WRITTEN PERMISSION.
COPYRIGHT © 1977, DIGITAL EQUIPMENT CORPORATION"

REVISIONS		
CHK	CHANGE NO.	REV

M8553-00008 B
W. BRUCKERT
12-FEB-77

digital

DRN. L. Loomis DATE 10-FEB-77
CHK'D. DATE 23-FEB-77
ENG. W. Bruckert DATE 23-FEB-77
BOARD LOCATION:
SHEET 1 OF 1
CNT7EE.DRU[4,614] 09-FEB-77 13:41
NEXT HIGHER ASSEMBLY: B-DD-M8553-0
FIRST USED ON OPTION/MODEL: KL10

TITLE: DTE20 CONTROL LOGIC

SIZE	CODE	NUMBER	REV.
D	CS	M8553-0-CNT7	B

448

MR

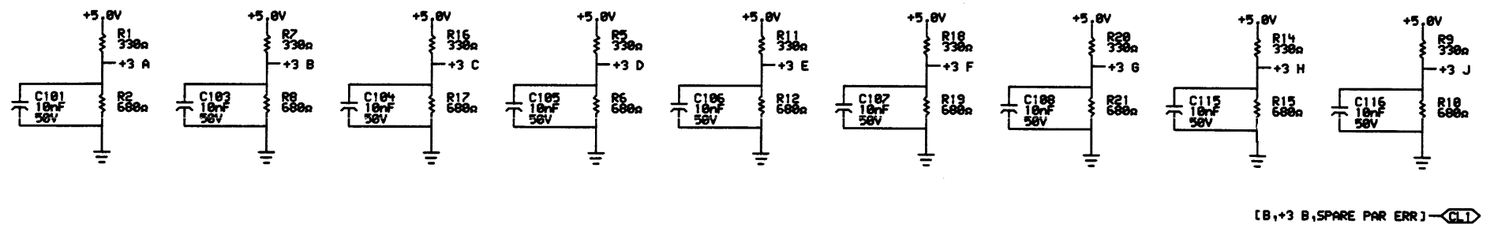

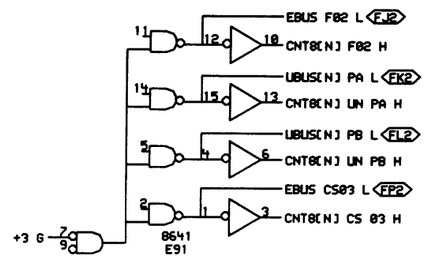

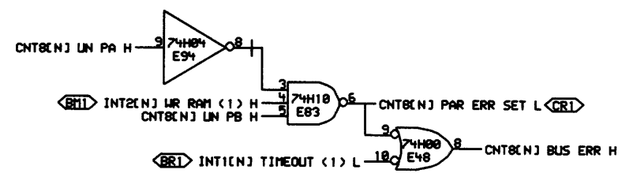

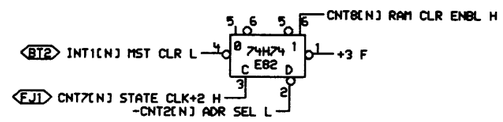

DTE SLOT LOCATIONS

TYPE	N=	SLOT
SINGLE	1	2AF04
MULTIPLE	1	2AF02
	2	2AF04
	3	2AF07
	4	2AF09

8 OF 9

"THIS DRAWING AND SPECIFICATIONS, HEREIN, ARE THE PROPERTY OF DIGITAL EQUIPMENT CORPORATION AND SHALL NOT BE REPRODUCED OR COPIED OR USED IN WHOLE OR IN PART AS THE BASIS FOR THE MANUFACTURE OR SALE OF ITEMS WITHOUT WRITTEN PERMISSION.
COPYRIGHT © 1977, DIGITAL EQUIPMENT CORPORATION"

REVISIONS		
CHK	CHANGE NO.	REV

M8553-0-0009 D
W. BRUCKERT

digital

DRN. 10-FEB-77 | ENG. W. Bruckert | DATE 23 FEB 77
CHK'D. 24 FEB 77 | DATE | BOARD LOCATION: SHEET 1 OF 1
CNT8EE.DRW[4,614] 09-FEB-77 13:41 | NEXT HIGHER ASSEMBLY: B-DD-M8553-0
FIRST USED ON OPTION/MODEL: KL10

TITLE: DTE20 CONTROL LOGIC

SIZE	CODE	NUMBER	REV.
D	CS	M8553-0-CNT8	D

449

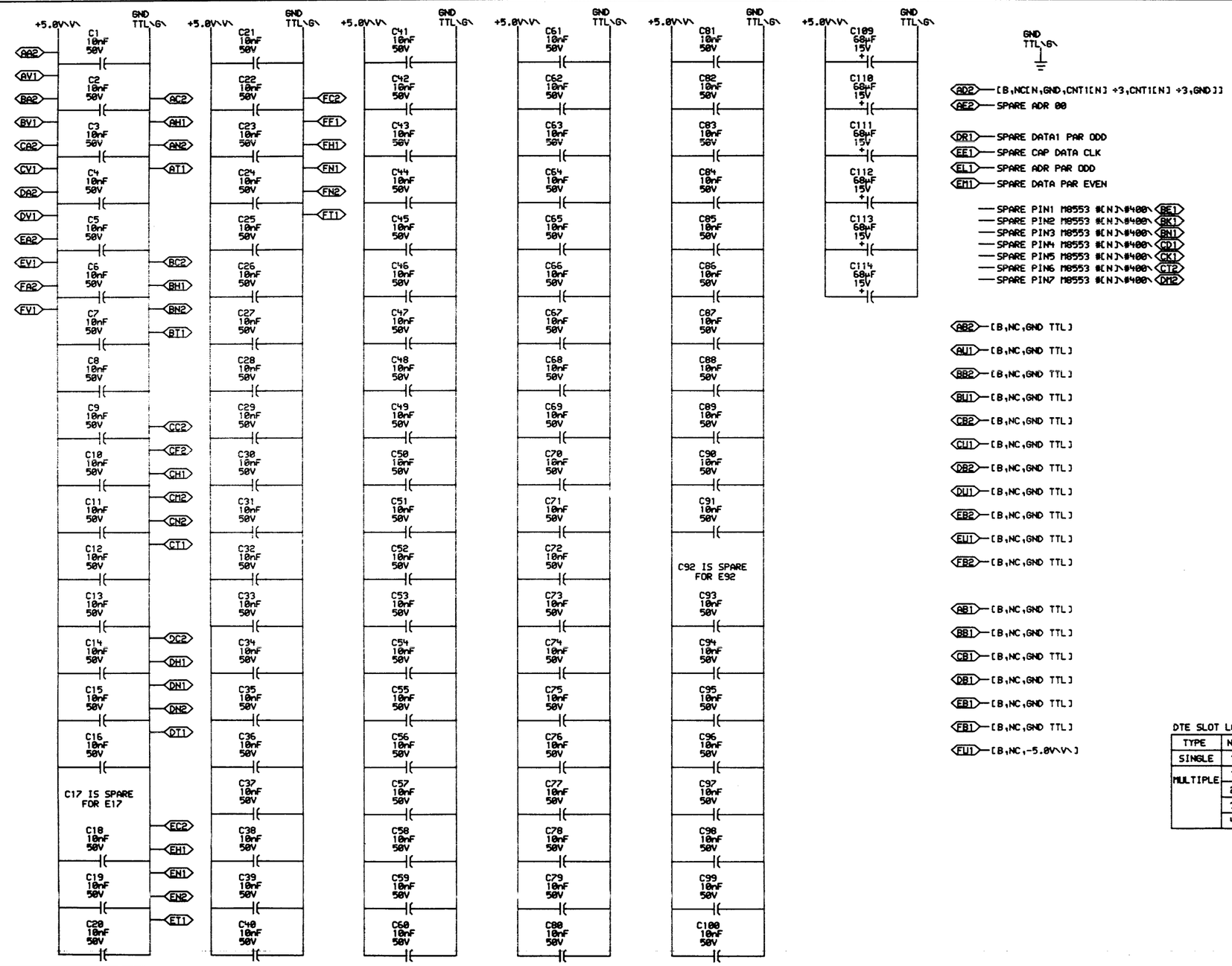

DTE SLOT LOCATIONS

TYPE	N=	SLOT
SINGLE	1	2AF04
MULTIPLE	1	2AF02
	2	2AF04
	3	2AF07
	4	2AF09

9 OF 9

"THIS DRAWING AND SPECIFICATIONS, HEREIN, ARE THE PROPERTY OF DIGITAL EQUIPMENT CORPORATION AND SHALL NOT BE REPRODUCED OR COPIED OR USED IN WHOLE OR IN PART AS THE BASIS FOR THE MANUFACTURE OR SALE OF ITEMS WITHOUT WRITTEN PERMISSION.
COPYRIGHT © 1977, DIGITAL EQUIPMENT CORPORATION"

REVISIONS

CHK	CHANGE NO.	REV
—	M8553-00009	C

W. BERKREY

DRW. 07-JUN-77 ENG. DATE
CHK DATE 07-JUN-77 BOARD LOCATION: SHEET 1 OF 1
CNTSEE.DRUC4,614] 07-JUN-77 06:34 NEXT HIGHER ASSEMBLY:
FIRST USED ON OPTION/MODEL: KL10 B-DD-M8553-0

TITLE: DTE20 CNTRL LOGIC PWR, CAP, AND GND

SIZE	CODE	NUMBER	REV.
D	CS	M8553-0-CNT9	C

450

MR

REVISION CONTROL SHEET

CUSTOMER PRINT SET	MFG SET	DRAWING NO	NO OF SHT	DESCRIPTION	OPTION NO/FILE DATE	REVISIONS A	B	C	D	E	F
				MODULE REVISION							
		D-UA-M8554-0-0	5	11/10 BUS DATA CONTROL		-	A	B	C	D	E
		D-CS-M8554-0-INT1	1	DTE20 UNIBUS INTERRUPT CONTROL		-	A	B	C	D	E
		D-CS-M8554-0-INT2	1	UNIBUS INTERRUPT CONTROL		-	—	A	B	B	C
		D-CS-M8554-0-INT3	1	UNIBUS INTERRUPT POWER AND GND		-	A	B	B	B	C
		K-CO-M8554-0-4	1	11/10 BUS DATA CONTROL		B	B	B	B	B	B
		D-AH-M8554-0-5	4	11/10 BUS DATA CONTROL		A	A	B	B	B	B
		B-MH-M8554-0-6	1	MODULE ECO HISTORY		-	A	B	C	D	E
		5010513	-	ETCH CIRCUIT BOARD		B	B	B	B	B	B
		P00-M8554-00		PROCESS SHEET (REF ONLY)		-	—	—	—	—	—

CUSTOMER PRINT SET CODES
X = PRINT OF DOCUMENT INCLUDED IN PRINT SET
C = INCLUDES ALL PRINTS INDICATED ON DOCUMENT
S = CONFIDENTIAL AUTHORIZED SIGNATURE REQUIRED

ECO NO	ORIG.	00001	00002 HD 6-11-75	00003	00004	MR005

TITLE	SHEET	SIZE	CODE	NUMBER	REV
11/10 BUS DATA CONTROL	2 OF 2	B	DD	M8554-0	E

451

MR

THIS DRAWING AND SPECIFICATIONS, HEREIN, ARE THE PROPERTY OF DIGITAL EQUIPMENT CORPORATION AND SHALL NOT BE REPRODUCED OR COPIED OR USED IN WHOLE OR IN PART AS THE BASIS FOR THE MANUFACTURE OR SALE OF ITEMS WITHOUT WRITTEN PERMISSION.
COPYRIGHT © 1974, DIGITAL EQUIPMENT CORPORATION

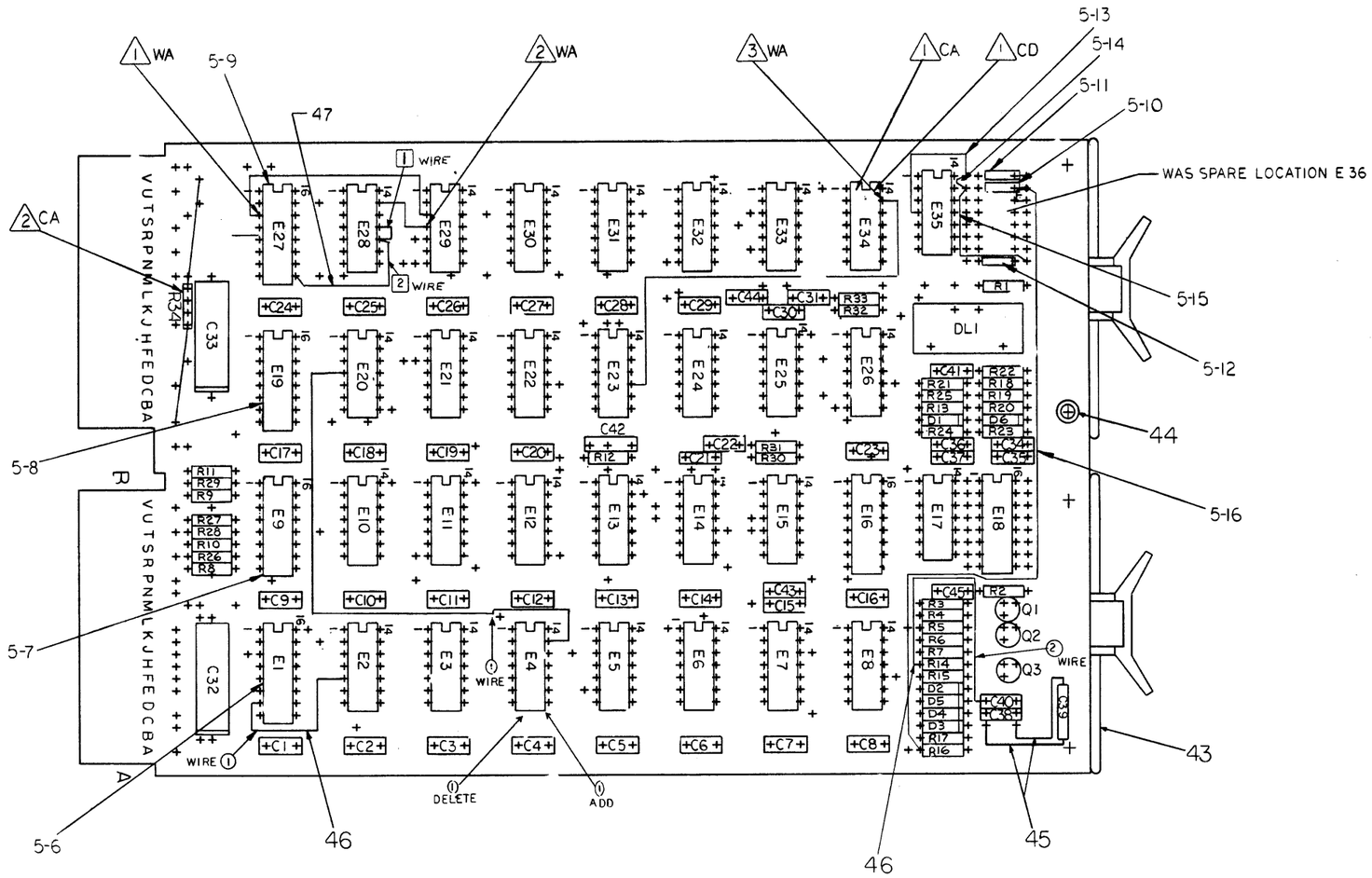

REVISIONS		
CHK	CHANGE NO	REV

TITLE	SIZE	CODE	NUMBER	REV.
11/10 BUS DATA CONTROL	D	UA	M8554-0-0	E
SCALE 2/1	SHEET 2 OF 5	DIST.		

452

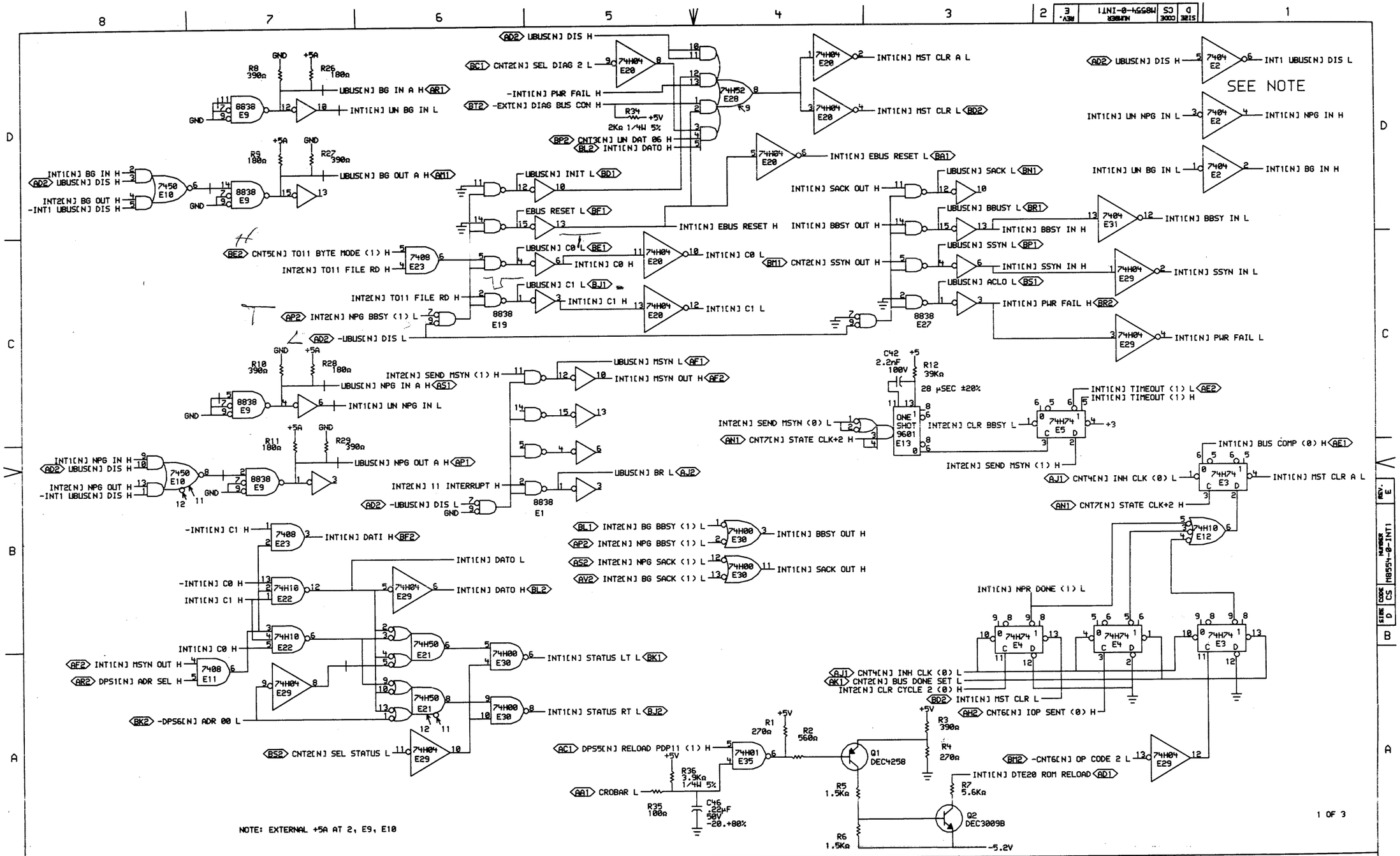

"THIS DRAWING AND SPECIFICATIONS, HEREIN, ARE THE PROPERTY OF DIGITAL EQUIPMENT CORPORATION AND SHALL NOT BE REPRODUCED OR COPIED OR USED IN WHOLE OR IN PART AS THE BASIS FOR THE MANUFACTURE OR SALE OF ITEMS WITHOUT WRITTEN PERMISSION. COPYRIGHT © 1977, DIGITAL EQUIPMENT CORPORATION"

REVISIONS		
CHK	CHANGE NO.	REV
	M8554-MR005	E

digital

DRW.	DATE 04-NOV-77	ENG.	DATE 4-NOV-77
CHKD.	DATE 2-NOV-77	BOARD LOCATION: SHEET 1 OF 1	
INT1EX.DRW[4,615] 02-NOV-77 15:02		NEXT HIGHER ASSEMBLY:	
FIRST USED ON OPTION/MODEL: KL10		B-DD-M8554-0	

TITLE: DTE20 UNIBUS INTERRUPT CONTROL

SIZE	CODE	NUMBER	REV
D	CS	M8554-0-INT1	E

453

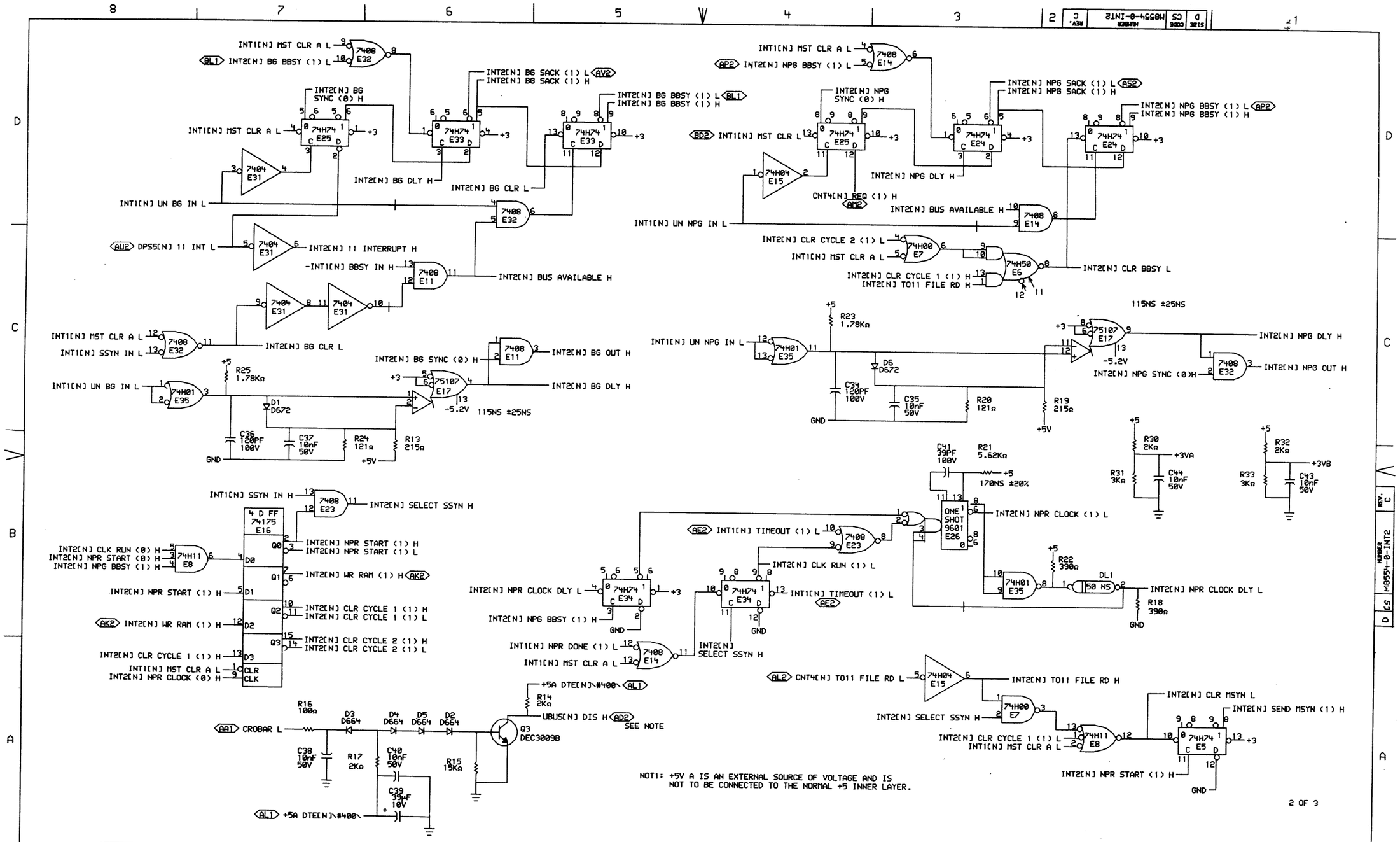

"THIS DRAWING AND SPECIFICATIONS, HEREIN, ARE THE PROPERTY OF DIGITAL EQUIPMENT CORPORATION AND SHALL NOT BE REPRODUCED OR COPIED OR USED IN WHOLE OR IN PART AS THE BASIS FOR THE MANUFACTURE OR SALE OF ITEMS WITHOUT WRITTEN PERMISSION. COPYRIGHT © 1978 DIGITAL EQUIPMENT CORPORATION"

REVISIONS		
CHK	CHANGE NO.	REV
	M8554 MR005	C
	L. BALES	

digital

DRW.	DATE 01-FEB-78	ENG.	DATE 2/2/78
CHK	DATE	BOARD LOCATION:	
		SHEET 1 OF 1	
INT2EX.DRW[4,615] 08-NOV-77 09:33		NEXT HIGHER ASSEMBLY:	
FIRST USED ON OPTION/MODEL: KL10		B-DD-M8554-0	

TITLE: UNIBUS INTERRUPT CONTROL

SIZE	CODE	NUMBER	REV.
D	CS	M8554-0-INT2	C

454

CALVO, MODULE:<M8554>INT2EX.DPL.3, SCALE 2, "D" RELEASE BOX
PLTSPOOL 14:56[4,414] 01-FEB-78 17:15

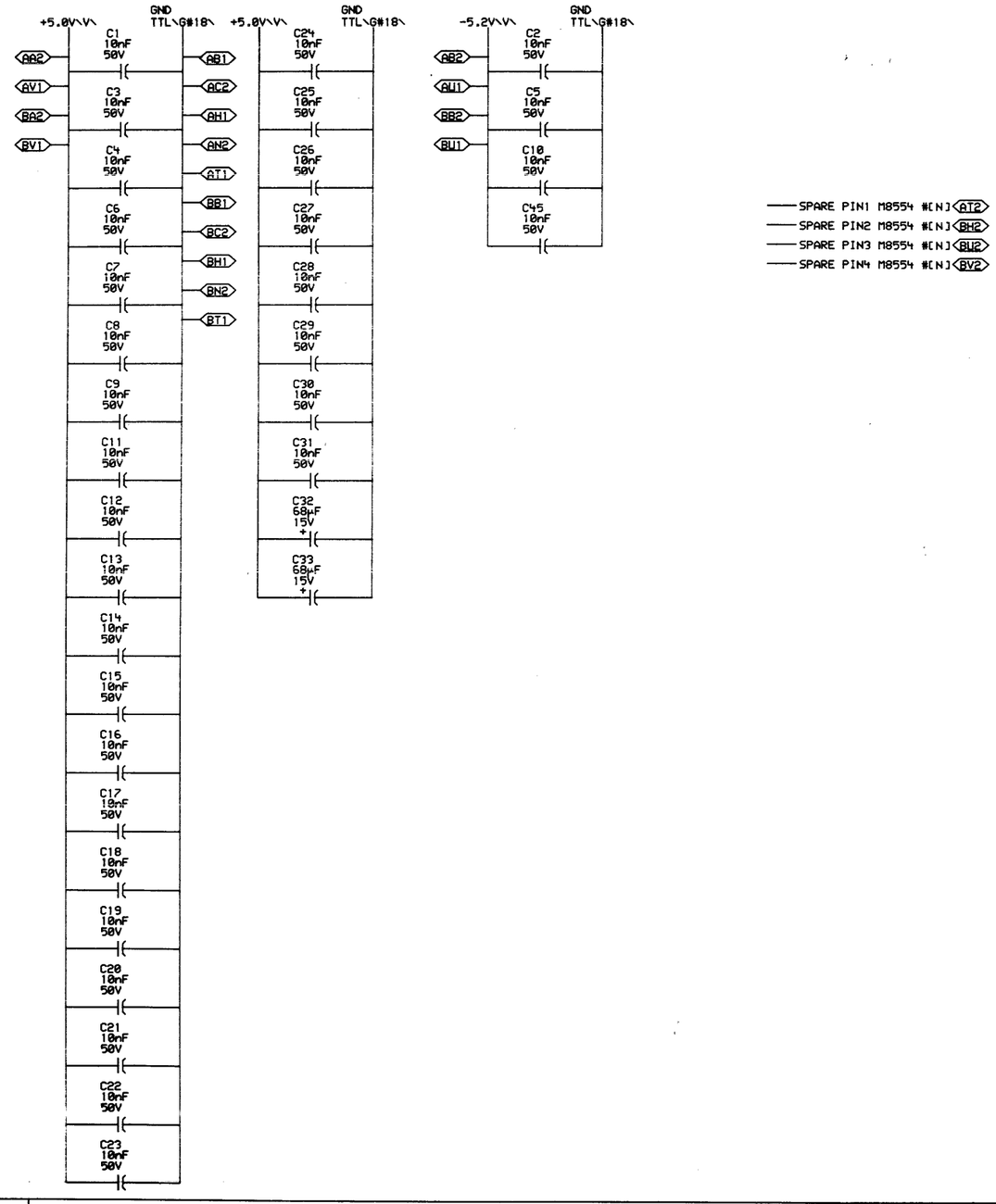

3 OF 3

"THIS DRAWING AND SPECIFICATIONS, HEREIN, ARE THE PROPERTY OF DIGITAL EQUIPMENT CORPORATION AND SHALL NOT BE REPRODUCED OR COPIED OR USED IN WHOLE OR IN PART AS THE BASIS FOR THE MANUFACTURE OR SALE OF ITEMS WITHOUT WRITTEN PERMISSION.
COPYRIGHT © 1977, DIGITAL EQUIPMENT CORPORATION"

REVISIONS		
CHK	CHANGE NO.	REV
	M8554-MR005	C
	L.BALES	
	1/26/78	

digital

DES. L. Loosley DATE 31-OCT-77
CHK'D. DATE
ENG. William Bruckert DATE 4-NOV-77
BOARD LOCATION:
SHEET 1 OF 1
INT3EX.DRWE4,615] 31-OCT-77 11:39
NEXT HIGHER ASSEMBLY: B-DD-M8554-0
FIRST USED ON OPTION/MODEL: KL10

TITLE: UNIBUS INTERRUPT POWER AND GROUND

SIZE	CODE	NUMBER	REV.
D	CS	M8554-0-INT3	C

455

REVISION CONTROL SHEET

CUSTOMER PRINT SET	MFG SET	DRAWING NO	NO OF SHT	DESCRIPTION	OPTION NO/FILE DATE	REVISIONS
				MODULE REVISION		A
		D-UA-M8559-Ø-Ø	1	I/O BOX CLOCK DISTRIBUTION		
		D-CS-M8559-Ø-CDS1	1	I/O BOX CLOCK DISTRIBUTION		-
		D-CS-M8559-Ø-CDS2	1	I/O BOX CLOCK DISTRIBUTION		-
		D-CS-M8559-Ø-CDS3	1	I/O BOX CLOCK DISTRIBUTION		-
		K-CO-M8559-Ø-4	1	I/O BOX CLOCK DISTRIBUTION (CALDEC DATA BASE)		B
		D-AH-M8559-Ø-5	5	I/O BOX CLOCK DISTRIBUTION		A
		B-MH-M8559-Ø-6	1	I/O BOX CLOCK DISTRIBUTION		-
		5010650	-	ETCH CIRCUIT BOARD		B
		P00-M8559-00		PROCESS SHEET (REF ONLY)		-

CUSTOMER PRINT SET CODES
X = PRINT OF DOCUMENT INCLUDED IN PRINT SET
C = INCLUDES ALL PRINTS INDICATED ON DOCUMENT
S = CONFIDENTIAL AUTHORIZED SIGNATURE REQUIRED

ECO NO
ORIG

TITLE		SIZE	CODE	NUMBER	REV
I/O BOX CLOCK DISTRIBUTION	SHEET 2 OF 2	B	DD	M8559-Ø	

456

"THIS DRAWING AND SPECIFICATIONS, HEREIN, ARE THE PROPERTY OF DIGITAL EQUIPMENT CORPORATION AND SHALL NOT BE REPRODUCED OR COPIED OR USED IN WHOLE OR IN PART AS THE BASIS FOR THE MANUFACTURE OR SALE OF ITEMS WITHOUT WRITTEN PERMISSION. COPYRIGHT © 1974 DIGITAL EQUIPMENT CORPORATION"

NOTES:

1. FOR DRAWING DIRECTORY REFER TO. B-DD-M9559-0
2. UNLESS OTHERWISE SPECIFIED THE FOLLOWING PIN NUMBERS APPLY

PACKAGE TYPE	VCC	GND
16 PIN DIP	16	8
14 PIN DIP	14	7

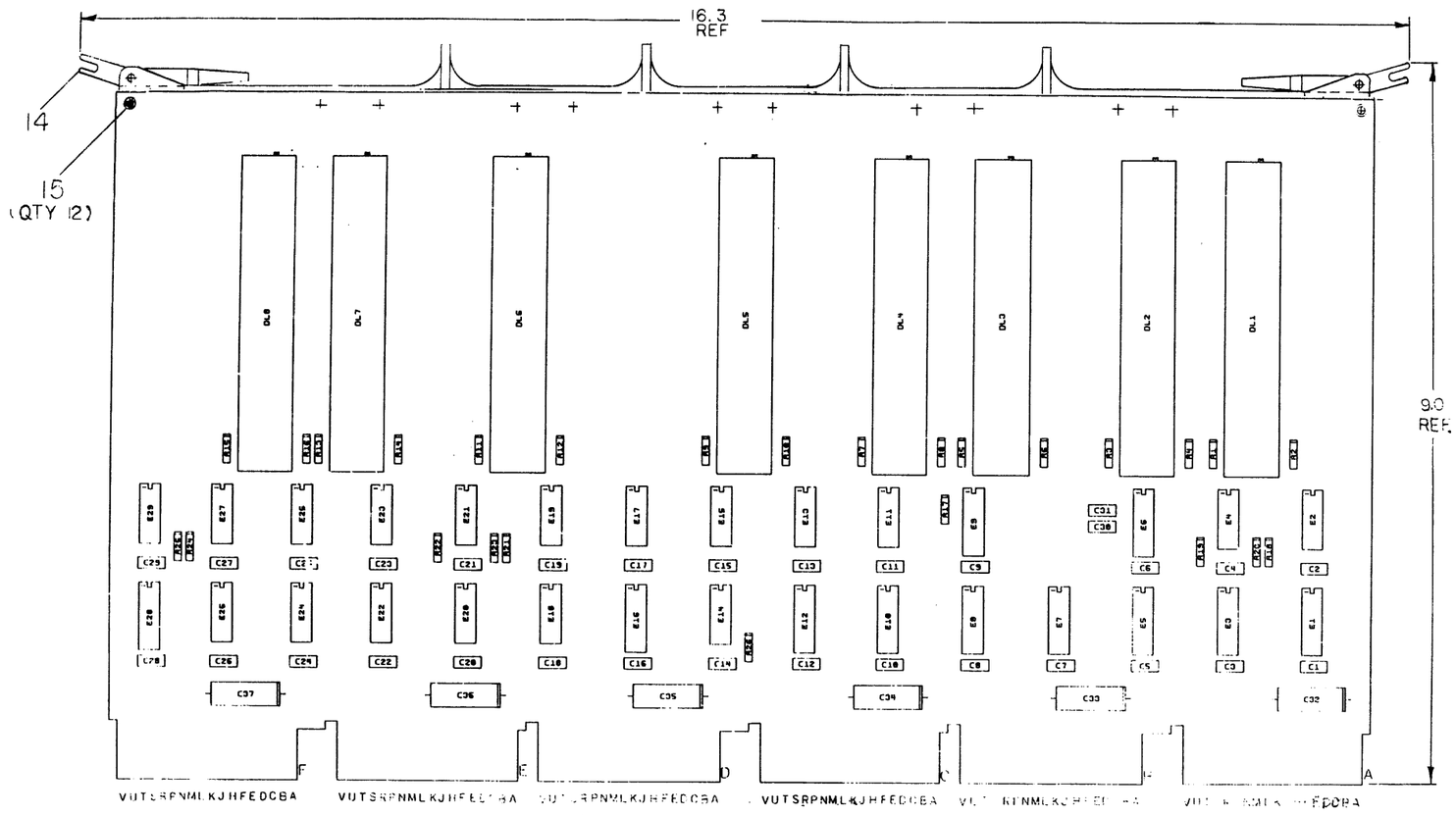

QTY	REF. DESIGNATION	DESCRIPTION	PART NO.	ITEM NO.
1		ETCHED CIRCUIT BOARD	5010650	1
6	C32 THRU C37	CAP. 68uf 10% 15V TANT.	1000082	2
31	C1 THRU C31	CAP. 10NF 20% 100V DISC	1001610-00	3
16	R1 THRU R16	RES. 300 5% ¼W	1301425	4
10	R17 THRU R26	RES. 39 5% ¼W	1302377	5
11	E1,E3,E5 THRU E10,E12,E16, E28	RES. PACK	1311003-1	6
8	DL1 THRU DL8	DELAY LINE 80NS	1610079	7
4	E2,E11,E15,E19	I.C. DEC 1074H40	1910469	8
1	E13	I.C. DEC 7402	1909004	9
4	E19,E20,E22,E24	I.C. DEC 1074H00	1910462	10
2	E14,E17	I.C. DEC 1074H30	1910468	11
3	E4,E21,E27	I.C. DEC 1074H11	1910465	12
4	E23,E25,E26,E29	I.C. DEC 7438	1911219	13
1		HANDLE ASSY.	1210711-2	14
12		EYELET, HANDLE	9006732	15
A R		#30 AWG WIRE WRAP WIRE WHITE	9105740-99	16

PARTS LIST

FIRST USED ON OPTION MODEL: KL10

ETCH BOARD REV.

IC TYPE	GND	+5V
GND AND 5V ARE USUALLY PIN 7 AND 14 RESPECTIVELY EXCEPTIONS ARE STATED ABOVE		

IC PIN LOCATIONS

CHANGE NO.	REV.

REVISIONS

DEC NO.	EIA NO.	DEC NO.	EIA NO.

SEMICONDUCTOR CONVERSION CHART

DRN. DATE
CHK'D. DATE 5/13/74
ENG. DATE 9/13/74
PROJ. ENG. DATE 9/13/74
PROD. DATE 9/13/74

NEXT HIGHER ASSY: B-DD-M8559-0

SCALE: NONE

SHEET 1 OF 1

digital

TITLE: I/O BOX CLOCK DISTRIBUTION

SIZE D | CODE UA | NUMBER M8559-0-0 | REV.

DIST.

SIZE D | CODE UA | NUMBER M8559-0-0 | REV. 0

451

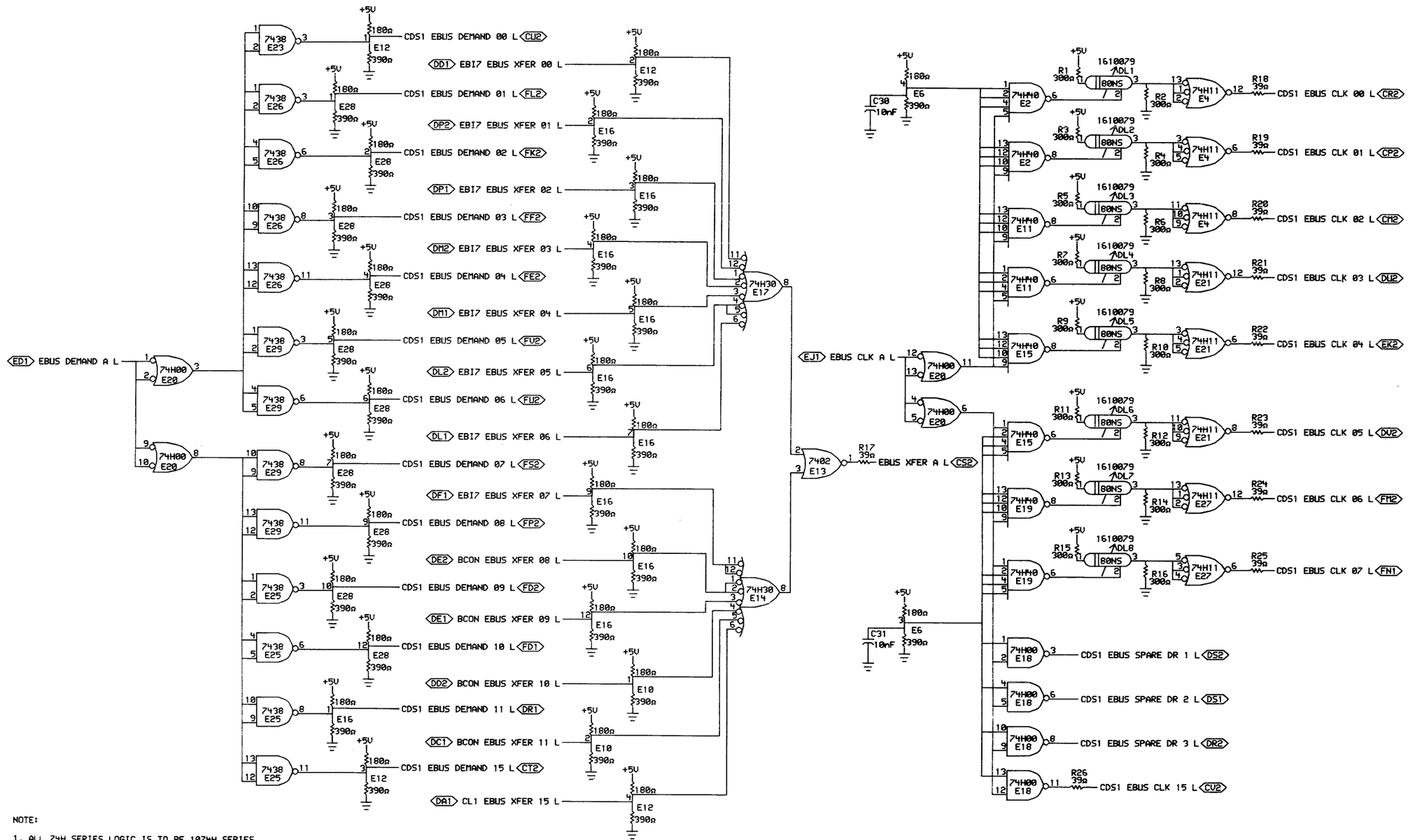

NOTE:

1. ALL 74H SERIES LOGIC IS TO BE 1074H SERIES
2. UNLESS OTHERWISE SPECIFIED THE FOLLOWING PIN NUMBERS APPLY
   PACKAGE TYPE VCC GND
   16 PIN DIP 16 8
   14 PIN DIP 14 7

"THIS DRAWING AND SPECIFICATIONS, HEREIN, ARE THE PROPERTY OF DIGITAL EQUIPMENT CORPORATION AND SHALL NOT BE REPRODUCED OR COPIED OR USED IN WHOLE OR IN PART AS THE BASIS FOR THE MANUFACTURE OR SALE OF ITEMS WITHOUT WRITTEN PERMISSION. COPYRIGHT © 1974, DIGITAL EQUIPMENT CORPORATION"

REVISIONS		
CHK	CHANGE NO.	REV

digital	DRN.	DATE	ENG.	DATE 9/13/74
	CHK'D	DATE	BOARD LOCATION: SHEET 1 OF 1	
CDS1EL10.426J	10-SEP-74 13:05	NEXT HIGHER ASSEMBLY:		
FIRST USED ON OPTION/MODEL: KL10		B-DD-M8559-0		

TITLE: I/O BOX CLOCK DISTRIBUTION

SIZE	CODE	NUMBER	REV.
D	CS	M8559-0-CDS1	

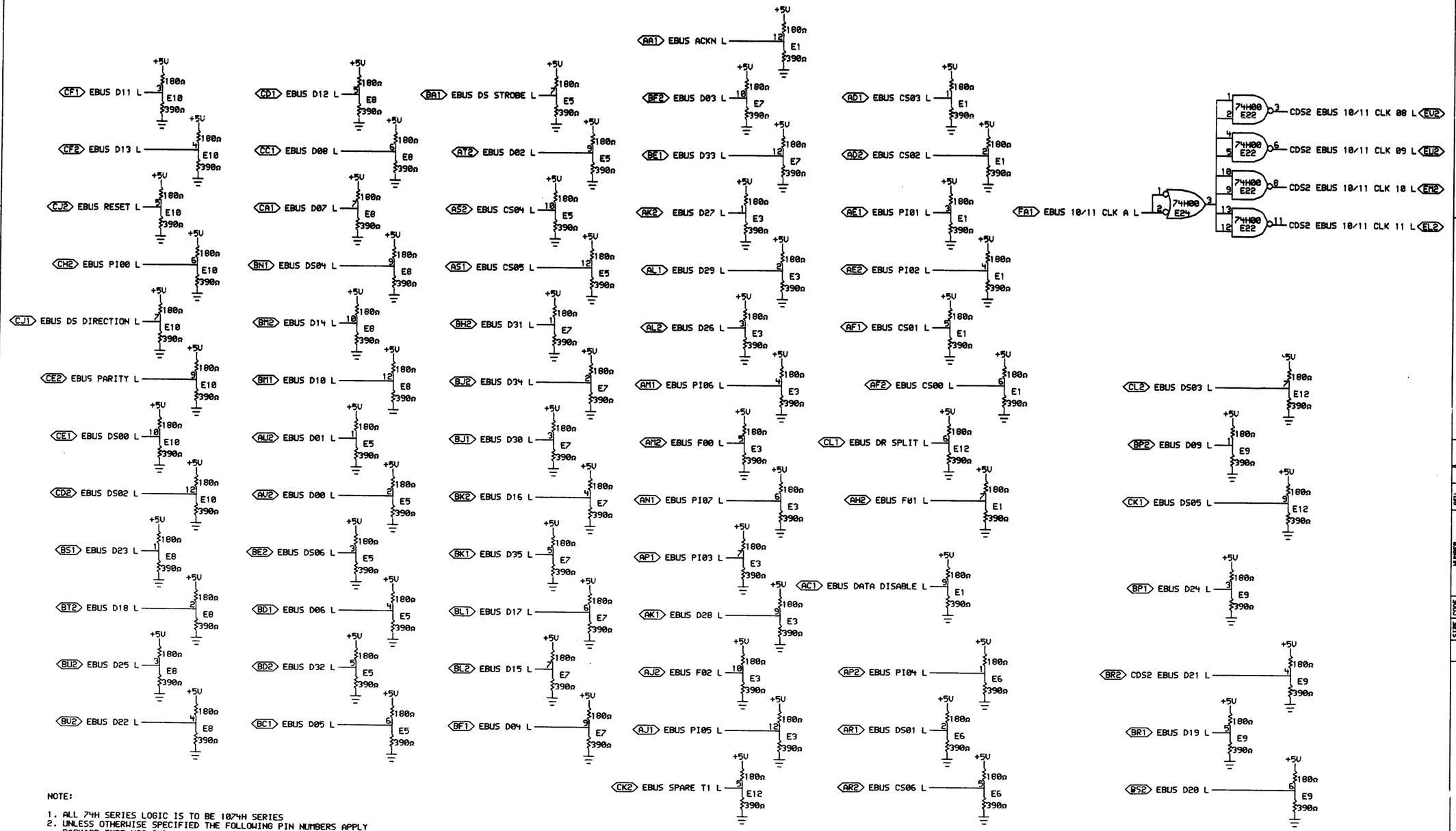

NOTE:

1. ALL 74H SERIES LOGIC IS TO BE 1074H SERIES
2. UNLESS OTHERWISE SPECIFIED THE FOLLOWING PIN NUMBERS APPLY

PACKAGE TYPE	VCC	GND
16 PIN DIP	16	8
14 PIN DIP	14	7

"THIS DRAWING AND SPECIFICATIONS, HEREIN, ARE THE PROPERTY OF DIGITAL EQUIPMENT CORPORATION AND SHALL NOT BE REPRODUCED OR COPIED OR USED IN WHOLE OR IN PART AS THE BASIS FOR THE MANUFACTURE OR SALE OF ITEMS WITHOUT WRITTEN PERMISSION. COPYRIGHT © 1974, DIGITAL EQUIPMENT CORPORATION"

REVISIONS		
CHK	CHANGE NO.	REV

459

digital	DRN.	DATE	ENG.	DATE 8/13/74
	CHK'D	DATE	BOARD LOCATION: SHEET 1 OF 1	
CDS2E[10,426]	08-SEP-74 00:53	NEXT HIGHER ASSEMBLY:		
FIRST USED ON OPTION/MODEL: KL10		B-DD-M8559-0		

TITLE: I/O BOX CLOCK DISTRIBUTION

SIZE	CODE	NUMBER	REV.
D	CS	M8559-0-CDS2	

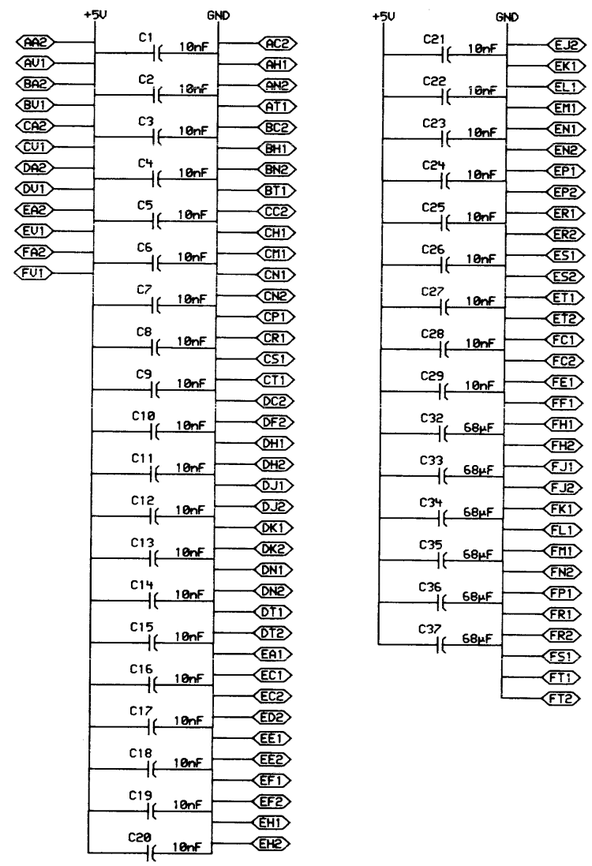

"THIS DRAWING AND SPECIFICATIONS, HEREIN, ARE THE PROPERTY OF DIGITAL EQUIPMENT CORPORATION AND SHALL NOT BE REPRODUCED OR COPIED OR USED IN WHOLE OR IN PART AS THE BASIS FOR THE MANUFACTURE OR SALE OF ITEMS WITHOUT WRITTEN PERMISSION.
COPYRIGHT © 1974, DIGITAL EQUIPMENT CORPORATION"

REVISIONS		
CHK	CHANGE NO.	REV

digital

DRN. C. Smith DATE 13-SEP-74
CHK C. Smith DATE 15-Sep-74
ENG. Sultan Zia DATE 7/16/74
BOARD LOCATION:
SHEET 1 OF 1
CDS3E[4,426] 13-SEP-74 16:02
FIRST USED ON OPTION/MODEL: KL10
NEXT HIGHER ASSEMBLY: B-DD-M8559-0

TITLE: I/O BOX CLOCK DISTRIBUTION

SIZE	CODE	NUMBER	REV.
D	CS	M8559-0-CDS3	

460

SIZE	CODE	NUMBER	REV.
D	CS	KL10-C-UBCI	

AA1	UBUS[N] INIT L\S\
AA2	[N/3+1,GND 2HJ4 8\G\,GND 2KL4-8\G\]
AB1	UBUS[N] INTR L\S\
AB2	[N/3+1,GND 2HJ4-8\G\,GND 2KL4-8\G\]
AC1	UBUS[N] D00 L\S\
AC2	[N/3+1,GND 2HJ4 8\G\,GND 2KL4-8\G\]
AD1	UBUS[N] D02 L\S\
AD2	UBUS[N] D01 L\S\
AE1	UBUS[N] D04 L\S\
AE2	UBUS[N] D03 L\S\
AF1	UBUS[N] D06 L\S\
AF2	UBUS[N] D05 L\S\
AH1	UBUS[N] D08 L\S\
AH2	UBUS[N] D07 L\S\
AJ1	UBUS[N] D10 L\S\
AJ2	UBUS[N] D09 L\S\
AK1	UBUS[N] D12 L\S\
AK2	UBUS[N] D11 L\S\
AL1	UBUS[N] D14 L\S\
AL2	UBUS[N] D13 L S\
AM1	UBUS[N] PA L\S\
AM2	UBUS[N] D15 L\S\
AN1	[N/3+1,GND 2HJ4-8\G\,GND 2KL4-8\G\]
AN2	UBUS[N] PB L\S\
AP1	[N/3+1,GND 2HJ4-8\G\,GND 2KL4-8\G\]
AP2	UBUS[N] BBUSY L\S\
AR1	[N/3+1,GND 2HJ4-8\G\,GND 2KL4-8\G\]
AR2	UBUS[N] SACK L\S\
AS1	[N/3+1,GND 2HJ4-8\G\,GND 2KL4-8\G\]
AS2	UBUS[N] NPR L\S\
AT1	[N/3+1,GND 2HJ4-8\G\,GND 2KL4-8\G\]
AT2	UBUS[N] BR 7 L\S\
AU1	UBUS[N] NPG IN H\S\
AU2	UBUS[N] BR 6 L\S\
AV1	UBUS[N] BG 7 IN H\S\
AV2	[N/3+1,GND 2HJ4-8\G\,GND 2KL4-8\G\]

BA1	UBUS[N] BG 6 IN H\S\
BA2	[N/3+1,GND 2HJ4-8\G\,GND 2KL4-8\G\]
BB1	UBUS[N] BG 5 IN H\S\
BB2	[N/3+1,GND 2HJ4-8\G\,GND 2KL4 8\G\]
BC1	UBUS[N] BR 5 L\S\
BC2	[N/3+1,GND 2HJ4-8\G\,GND 2KL4-8\G\]
BD1	[N/3+1,GND 2HJ4-8\G\,GND 2KL4-8\G\]
BD2	UBUS[N] BR 4 L\S\
BE1	[N/3+1,GND 2HJ4-8\G\,GND 2KL4-8\G\]
BE2	UBUS[N] BG 4 IN H\S\
BF1	UBUS[N] ACLO L\S\
BF2	UBUS[N] DCLJ L\S\
BH1	UBUS[N] A01 L\S\
BH2	UBUS[N] A00 L\S\
BJ1	UBUS[N] A03 L\S\
BJ2	UBUS[N] A02 L\S\
BK1	UBUS[N] A05 L\S\
BK2	UBUS[N] A04 L\S\
BL1	UBUS[N] A07 L\S\
BL2	UBUS[N] A06 L\S\
BM1	UBUS[N] A09 L\S\
BM2	UBUS[N] A08 L\S\
BN1	UBUS[N] A11 L\S\
BN2	UBUS[N] A10 L\S\
BP1	UBUS[N] A13 L\S\
BP2	UBUS[N] A12 L\S\
BR1	UBUS[N] A15 L\S\
BR2	UBUS[N] A14 L\S\
BS1	UBUS[N] A17 L\S\
BS2	UBUS[N] A16 L\S\
BT1	[N/3+1,GND 2HJ4-8\G\,GND 2KL4-8\G\]
BT2	UBUS[N] C1 L\S\
BU1	UBUS[N] SSYN L\S\
BU2	UBUS[N] C0 L\S\
BV1	UBUS[N] MSYN L\S\
BV2	[N/3+1,GND 2HJ4-8\G\,GND 2KL4-8\G\]

"THIS DRAWING AND SPECIFICATIONS, HEREIN, ARE THE PROPERTY OF DIGITAL EQUIPMENT CORPORATION AND SHALL NOT BE REPRODUCED OR COPIED OR USED IN WHOLE OR IN PART AS THE BASIS FOR THE MANUFACTURE OR SALE OF ITEMS WITHOUT WRITTEN PERMISSION.
COPYRIGHT © 1976, DIGITAL EQUIPMENT CORPORATION"

REVISIONS		
CHK	CHANGE NO.	REV

digital	DRN.	DATE 02-FEB-76	ENG.	DATE 05-MAR-76	TITLE. UNIBUS CABLE IN
	CHK	DATE 2/4/76	BOARD LOCATION: SHEET 1 OF 1		
UBCI.DRW[4,426]	27-FEB-76 10:42		NEXT HIGHER ASSEMBLY.		
FIRST USED ON OPTION/MODEL: KL10			B-DD-KL10-C		

SIZE	CODE	NUMBER	REV.
D	CS	KL10-C-UBCI	

461

AA1	UBUS[N] INIT L\C\
AA2	[N/3+1,GND 2 4-8\G\,GND 2KL4-8\G\]
AB1	UBUS[N] INTR L\C\
AB2	[N/3+1,GND 2HJ4-8\G\,GND 2KL4-8\G\]
AC1	UBUS[N] D00 L\C\
AC2	[N/3+1,GND 2HJ4-8\G\,GND 2KL4-8\G\]
AD1	UBUS[N] D02 L\C\
AD2	UBUS[N] D01 L\C\
AE1	UBUS[N] D04 L\C\
AE2	UBUS[N] D03 L\C\
AF1	UBUS[N] D06 L\C\
AF2	UBUS[N] D05 L\C\
AH1	UBUS[N] D08 L\C\
AH2	UBUS[N] D07 L\C\
AJ1	UBUS[N] D10 L\C\
AJ2	UBUS[N] D09 L\C\
AK1	UBUS[N] D12 L\C\
AK2	UBUS[N] D11 L\C\
AL1	UBUS[N] D14 L\C\
AL2	UBUS[N] D13 L\C\
AM1	UBUS[N] PA L\C\
AM2	UBUS[N] D15 L\C\
AN1	[N/3+1,GND 2HJ4-8\G\,GND 2KL4-8\G\]
AN2	UBUS[N] PB L\C\
AP1	[N/3+1,GND 2HJ4-8\G\,GND 2KL4-8\G\]
AP2	UBUS[N] BBUSY L\C\
AR1	[N/3+1,GND 2HJ4-8\G\,GND 2KL4-8\G\]
AR2	UBUS[N] SACK L\C\
AS1	[N/3+1,GND 2HJ4-8\G\,GND 2KL4-8\G\]
AS2	UBUS[N] NPR L\C\
AT1	[N/3+1,GND 2HJ4-8\G\,GND 2KL4-8\G\]
AT2	UBUS[N] BR 7 L\C\
AU1	UBUS[N] NPG OUT H\C\
AU2	UBUS[N] BR 6 L\C\
AV1	UBUS[N] BG 7 OUT H\C\
AV2	[N/3+1,GND 2HJ4-8\G\,GND 2KL4-8\G\]

BA1	UBUS[N] BG 6 OUT H\C\
BA2	[N/3+1,GND 2HJ4-8\G\,GND 2KL4-8\G\]
BB1	UBUS[N] BG 5 OUT H\C\
BB2	[N/3+1,GND 2HJ4-8\G\,GND 2KL4-8\G\]
BC1	UBUS[N] BR 5 L\C\
BC2	[N/3+1,GND 2HJ4-8\G\,GND 2KL4-8\G\]
BD1	[N/3+1,GND 2HJ4-8\G\,GND 2KL4-8\G\]
BD2	UBUS[N] BR 4 L\C\
BE1	[N/3+1,GND 2HJ4-8\G\,GND 2KL4-8\G\]
BE2	UBUS[N] BG 4 OUT H\C\
BF1	UBUS[N] ACLO L\C\
BF2	UBUS[N] DCLO L\C\
BH1	UBUS[N] A01 L\C\
BH2	UBUS[N] A00 L\C\
BJ1	UBUS[N] A03 L\C\
BJ2	UBUS[N] A02 L\C\
BK1	UBUS[N] A05 L\C\
BK2	UBUS[N] A04 L\C\
BL1	UBUS[N] A07 L\C\
BL2	UBUS[N] A06 L\C\
BM1	UBUS[N] A09 L\C\
BM2	UBUS[N] A08 L\C\
BN1	UBUS[N] A11 L\C\
BN2	UBUS[N] A10 L\C\
BP1	UBUS[N] A13 L\C\
BP2	UBUS[N] A12 L\C\
BR1	UBUS[N] A15 L\C\
BR2	UBUS[N] A14 L\C\
BS1	UBUS[N] A17 L\C\
BS2	UBUS[N] A16 L\C\
BT1	[N/3+1,GND 2HJ4-8\G\,GND 2KL4-8\G\]
BT2	UBUS[N] C1 L\C\
BU1	UBUS[N] SSYN L\C\
BU2	UBUS[N] C0 L\C\
BV1	UBUS[N] MSYN L\C\
BV2	[N/3+1,GND 2HJ4-8\G\,GND 2KL4-8\G\]

"THIS DRAWING AND SPECIFICATIONS, HEREIN, ARE THE PROPERTY OF DIGITAL EQUIPMENT CORPORATION AND SHALL NOT BE REPRODUCED OR COPIED OR USED IN WHOLE OR IN PART AS THE BASIS FOR THE MANUFACTURE OR SALE OF ITEMS WITHOUT WRITTEN PERM SSION.
COPYRIGHT © 1976, DIGITAL EQUIPMENT CORPORATION"

REVISIONS		
CHK	CHANGE NO.	REV

digital

DRN. D. Toomey DATE 02-MAR 76 ENG. DATE
CHK. El Stephenson DATE 3/1/76 BOAR. LOCATION:
UBCO.DRW[4,426] 02-MAR-76 09:12 SHEET 1 OF 1
FIRST USED ON OPTION/MODEL: KL10 NEXT HIGHER ASSEMBLY: B-DD-KL10-C

TITLE: UNIBUS CABLE OUT

SIZE	CODE	NUMBER	REV.
D	CS	KL10-C-UBCO	

462

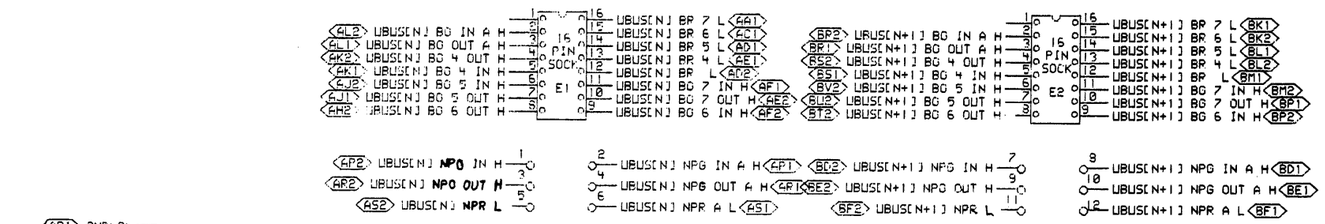

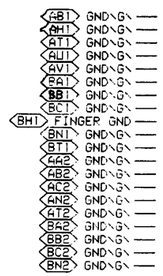

DTE NPR NPR ENABLED (NORMAL SETUP) JUMPER	DTE NPR NPR DISABLED JUMPER
LUG 1 TO LUG 2	LUG 1 TO LUG 3
LUG 3 TO LUG 4	LUG 5 OPEN
LUG 5 TO LUG 6	

DTE NPR NPR ENABLED (NORMAL SETUP) JUMPER	DTE NPR NPR DISABLED JUMPER
LUG 7 TO LUG 8	LUG 7 TO LUG 9
LUG 9 TO LUG 10	LUG 11 OPEN
LUG 11 TO LUG 12	

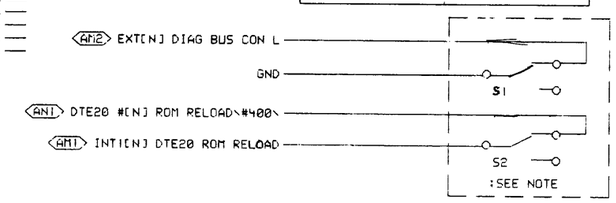

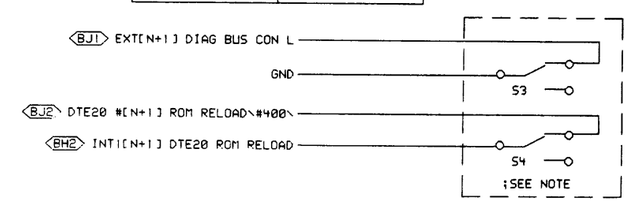

11 INT LEVEL DESIRED	PART NUMBER INSERT IN E1)
4	5408776
5	5408778
6	5408780
7	5408782

;NOTES:

1. THESE SWITCHES ARE LOCATED ON THE MASTER INTERRUPT SWITCH BOARD 5411360 OR 5411360YA
2. IN 1080 CONFIGURATIONS, THE 5411360YA IS USED.
3. THE 5411360YA HAS S2 ONLY. THE 5411360 HAS S1,S2,S3,S4.

"THIS DRAWING AND SPECIFICATIONS, HEREIN, ARE THE PROPERTY OF DIGITAL EQUIPMENT CORPORATION AND SHALL NOT BE REPRODUCED OR COPIED OR USED IN WHOLE OR IN PART AS THE BASIS FOR THE MANUFACTURE OR SALE OF ITEMS WITHOUT WRITTEN PERMISSION. COPYRIGHT © 1974, DIGITAL EQUIPMENT CORPORATION"

REVISIONS		
CHK	CHANGE NO.	REV

digital

DRN. DATE 12-27-74 ENG. DATE 12/27/74
CHK'D DATE 12-27-74 BOARD LOCATION:
SHEET 1 OF 1
SWITCH,426J 27-DEC-74 13:37 NEXT HIGHER ASSEMBLY: B-DD-M8564-0
FIRST USED ON OPTION/MODEL: KL10

TITLE: DTE20 INTERRUPT JUMPER

SIZE	CODE	NUMBER	REV.
D	CS	M8564-0-INTJ	

463