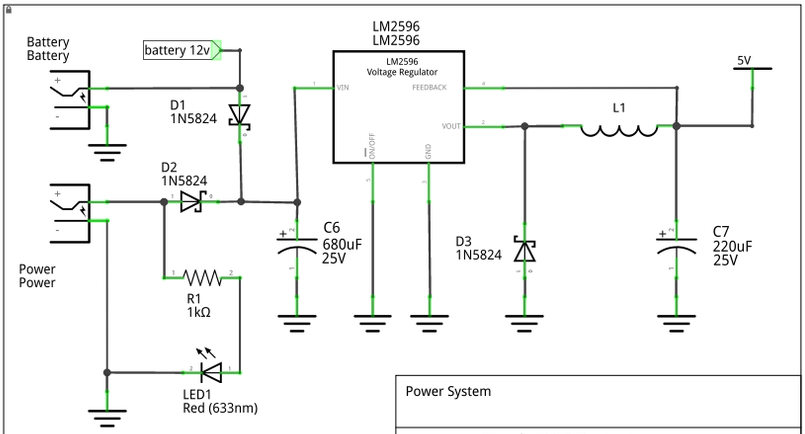

Power System			
Project	Cicada DCP Project		
Filename	CicadaPCB.fzz	Rev	0.0.1-a
Date	12 jan 2021 07:45:47	Sheet	1/1

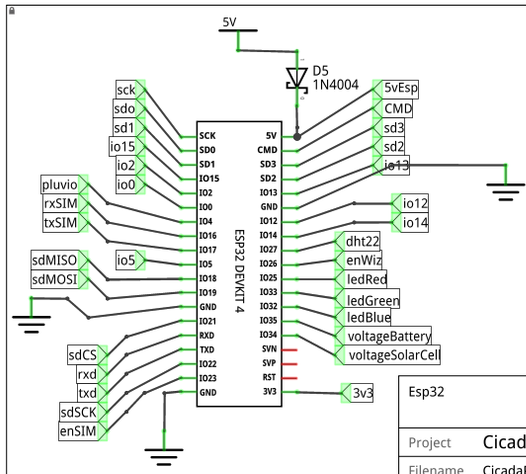

Esp32			
Project	Cicada DCP Project		
Filename	CicadaPCB.fzz	Rev	0.0.1-a
Date	12 jan 2021 07:45:47	Sheet	1/1

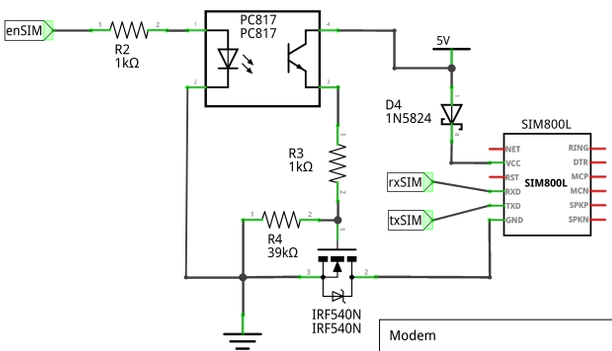

Modem			
Project	Cicada DCP Project		
Filename	CicadaPCB.fzz	Rev	0.0.1-a
Date	12 jan 2021 07:45:47	Sheet	1/1

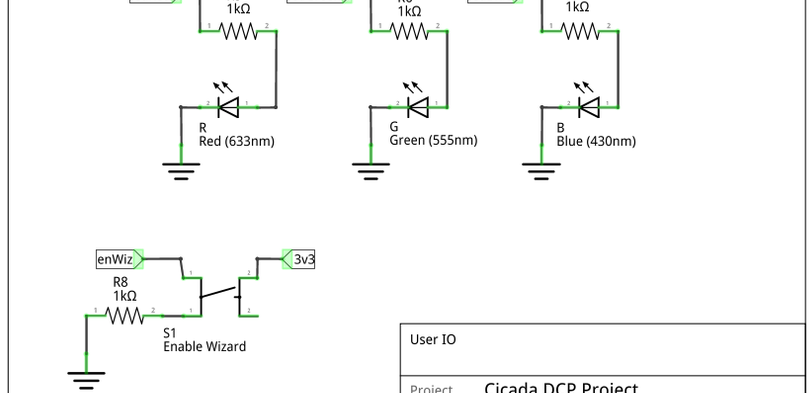

User IO			
Project	Cicada DCP Project		
Filename	CicadaPCB.fzz	Rev	0.0.1-a
Date	12 jan 2021 07:45:47	Sheet	1/1

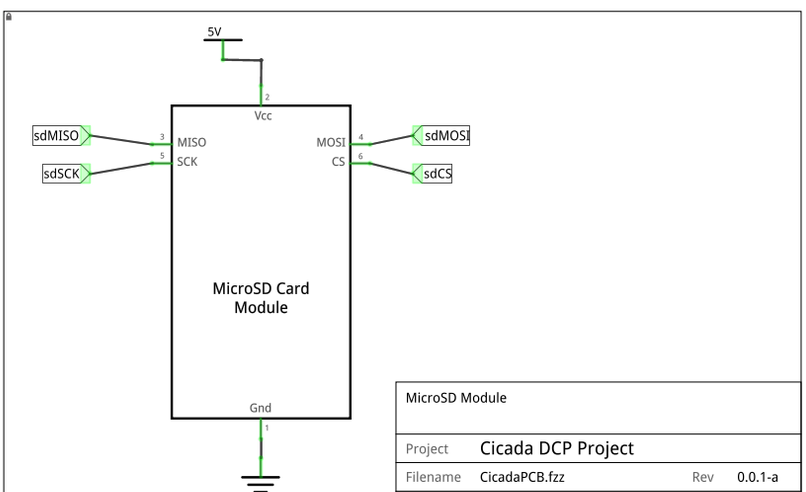

MicroSD Module			
Project	Cicada DCP Project		
Filename	CicadaPCB.fzz	Rev	0.0.1-a
Date	12 jan 2021 07:45:47	Sheet	1/1

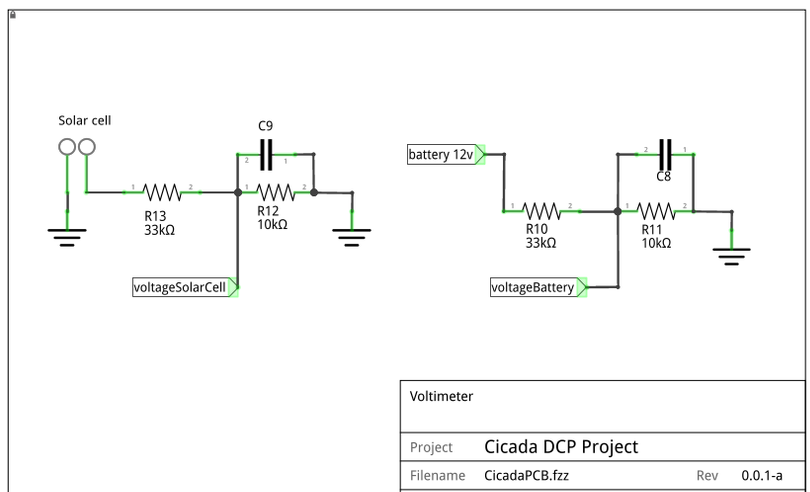

Voltimeter			
Project	Cicada DCP Project		
Filename	CicadaPCB.fzz	Rev	0.0.1-a
Date	12 jan 2021 07:45:47	Sheet	1/1

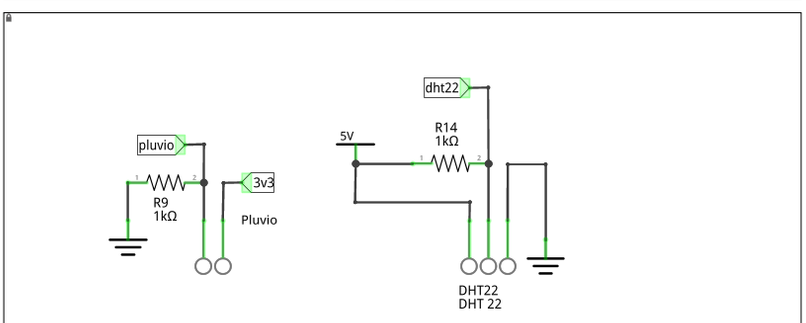

Sensors			
Project	Cicada DCP Project		
Filename	CicadaPCB.fzz	Rev	0.0.1-a
Date	12 jan 2021 07:45:47	Sheet	1/1

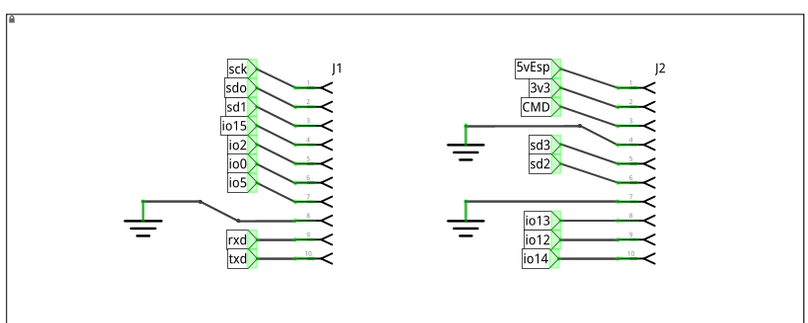

Expansion Shield			
Project	Cicada DCP Project		
Filename	CicadaPCB.fzz	Rev	0.0.1-a
Date	12 jan 2021 07:45:47	Sheet	1/1

fritzing