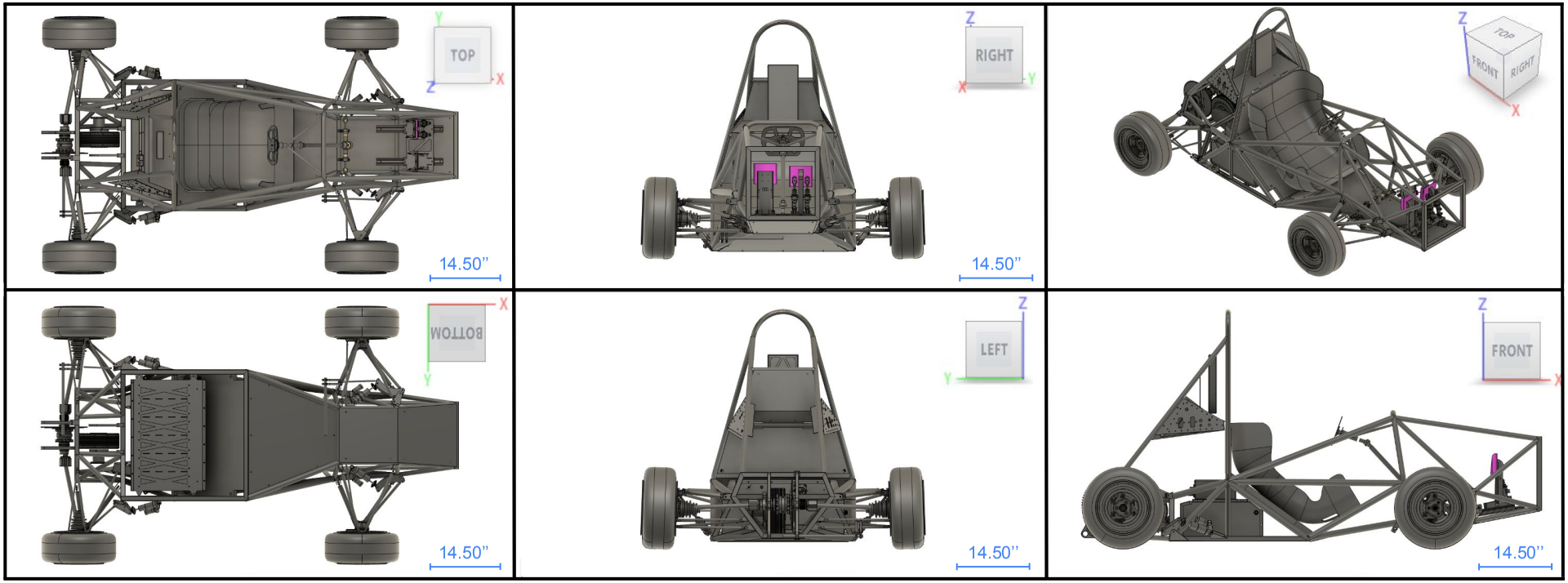
TOP
14.50"
RIGHT
14.50"
TOP
FRONT
RIGHT
BOTTOM
14.50"
LEFT
14.50"
FRONT
14.50"

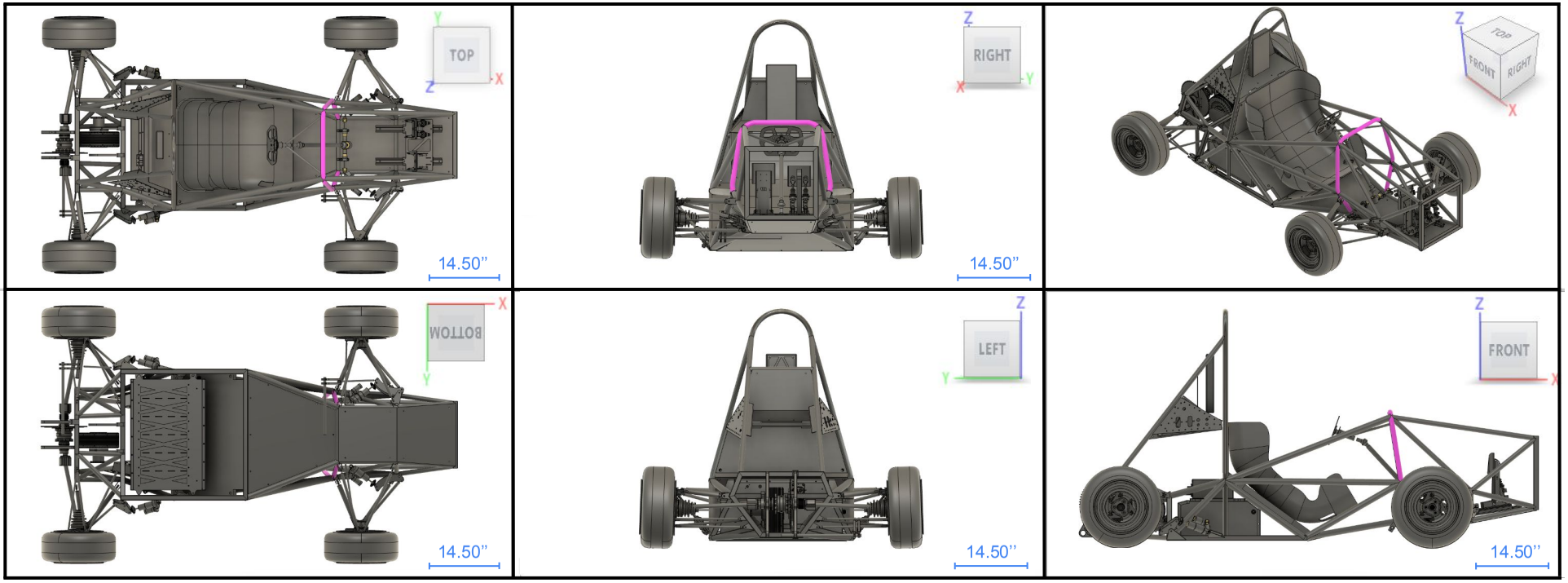
TOP
14.50"
RIGHT
14.50"
TOP
FRONT
RIGHT
BOTTOM
14.50"
LEFT
14.50"
FRONT
14.50"

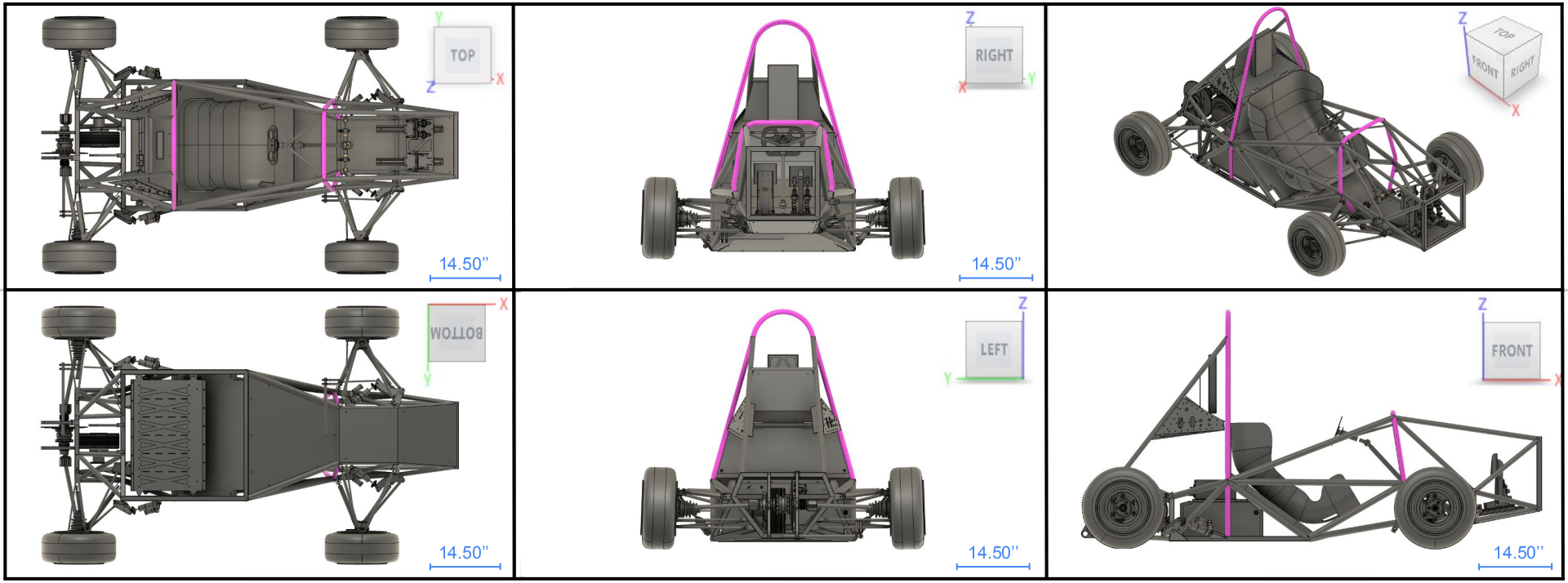
TOP
14.50"
RIGHT
14.50"
TOP
FRONT
RIGHT
BOTTOM
14.50"
LEFT
14.50"
FRONT
14.50"

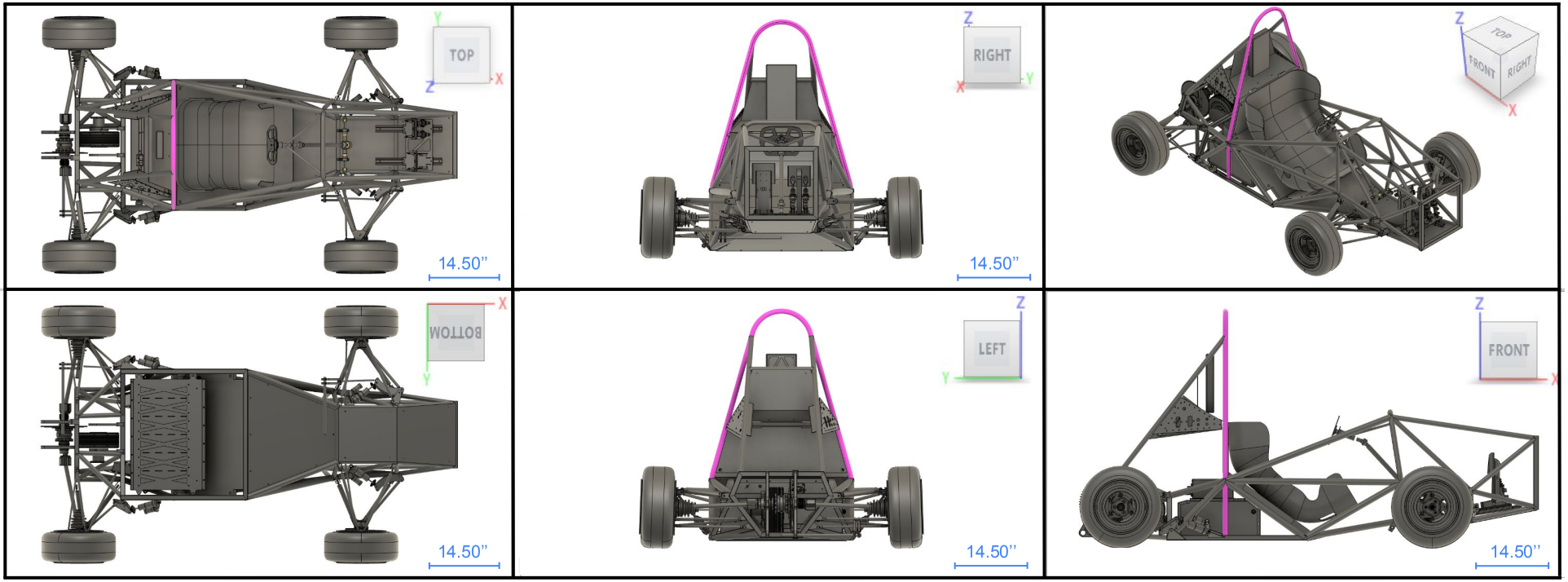
TOP
14.50"
RIGHT
14.50"
TOP
FRONT
RIGHT
BOTTOM
14.50"
LEFT
14.50"
FRONT
14.50"

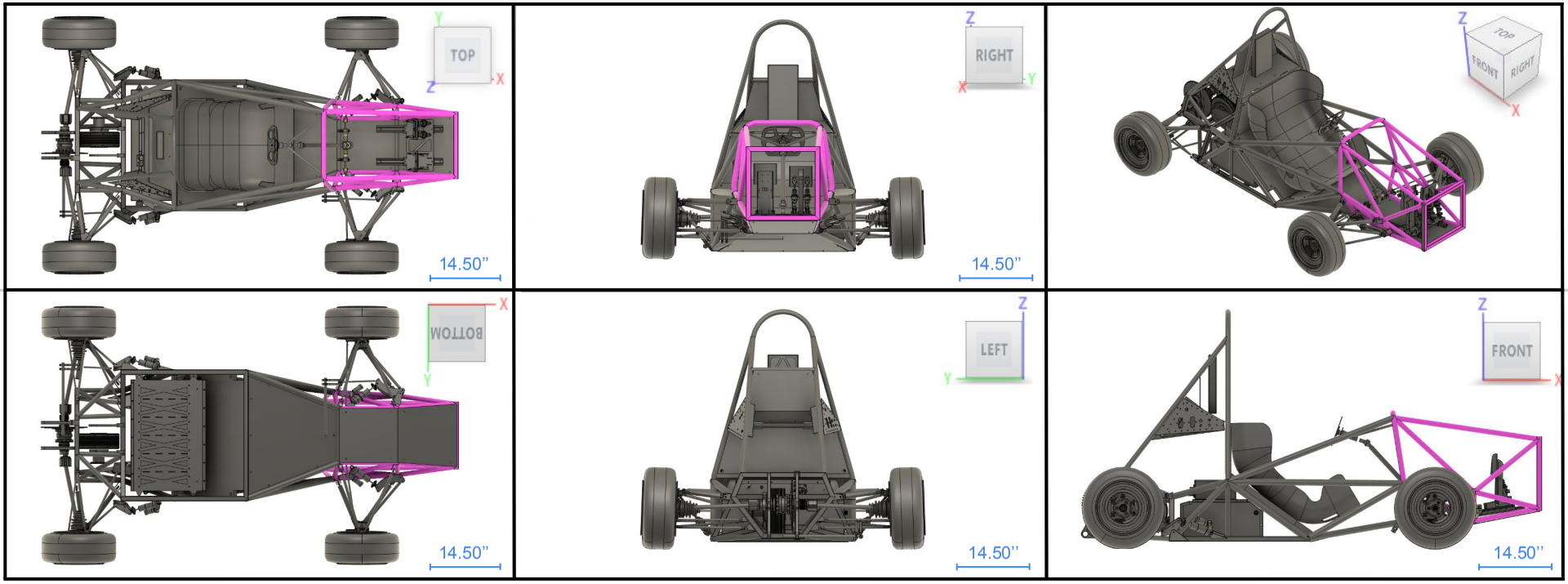
TOP
14.50"
RIGHT
14.50"
TOP
FRONT
RIGHT
BOTTOM
14.50"
LEFT
14.50"
FRONT
14.50"

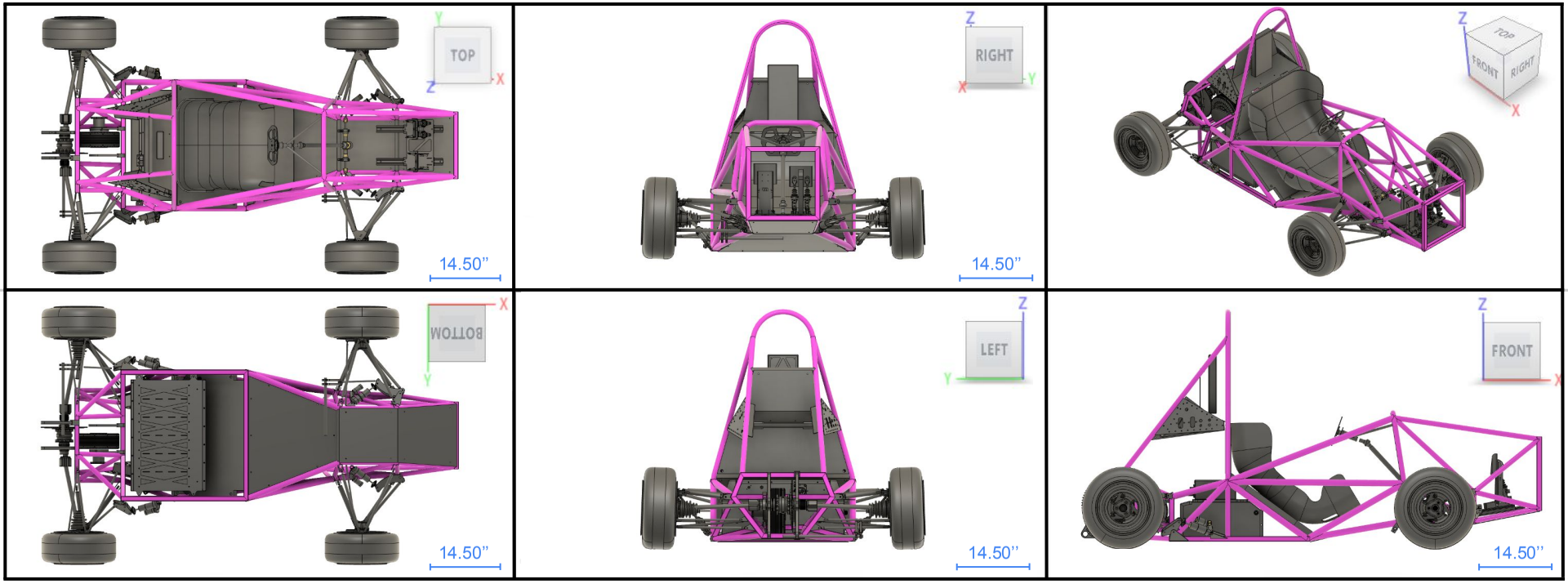
TOP
14.50"
RIGHT
14.50"
TOP
FRONT
RIGHT
BOTTOM
14.50"
LEFT
14.50"
FRONT
14.50"

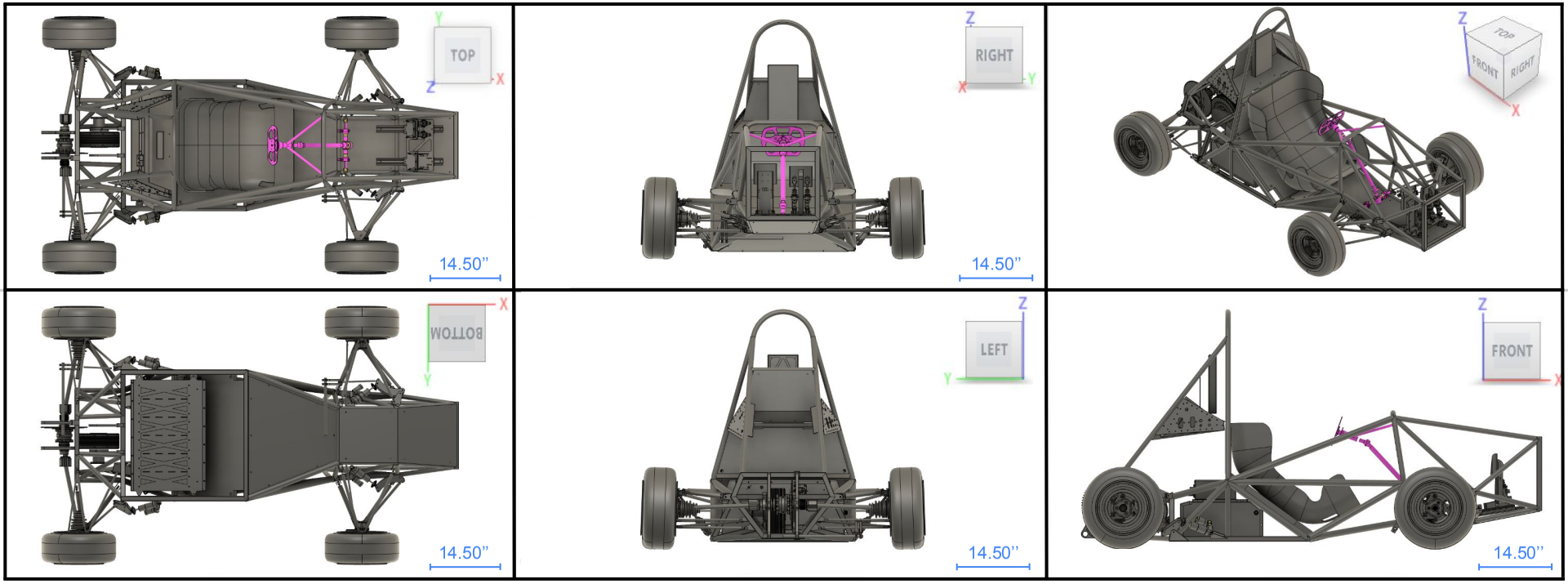
TOP
14.50"
RIGHT
14.50"
TOP
FRONT
RIGHT
BOTTOM
14.50"
LEFT
14.50"
FRONT
14.50"

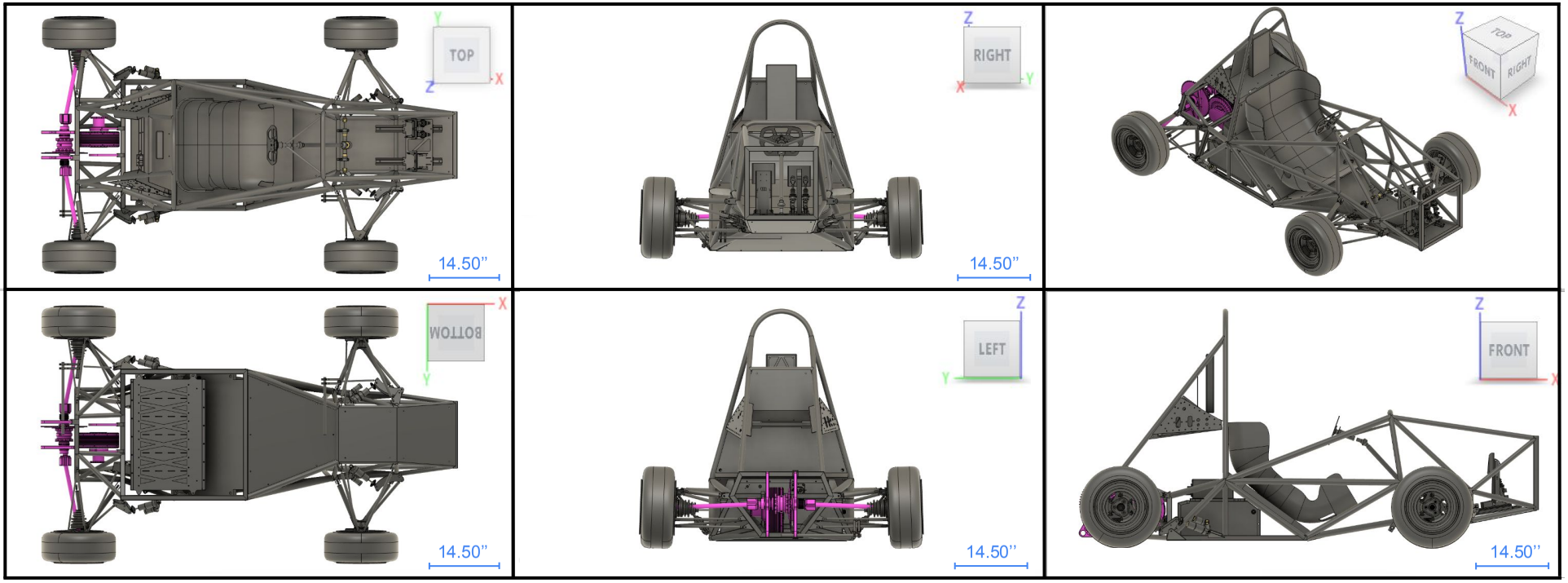
TOP
14.50"
RIGHT
14.50"
TOP
FRONT
RIGHT
BOTTOM
14.50"
LEFT
14.50"
FRONT
14.50"

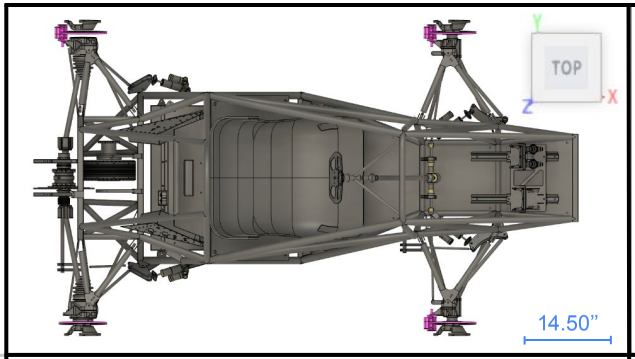
TOP
14.50"

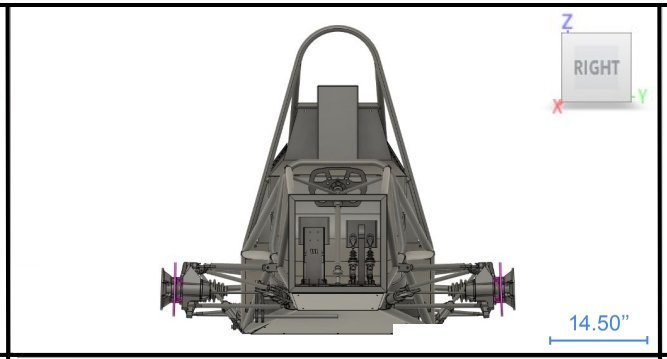
RIGHT
14.50"

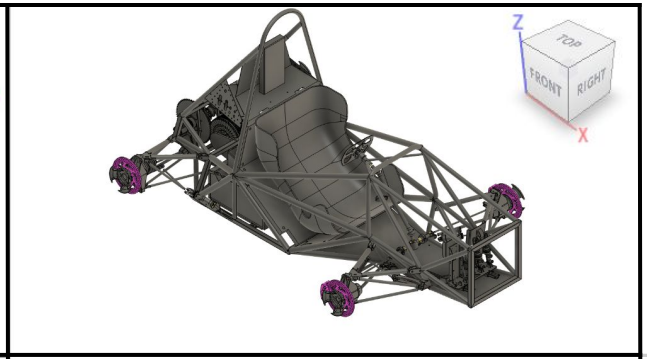
TOP
FRONT
RIGHT

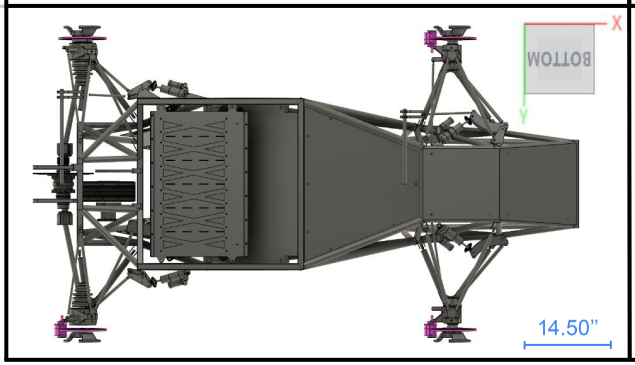
BOTTOM
14.50"

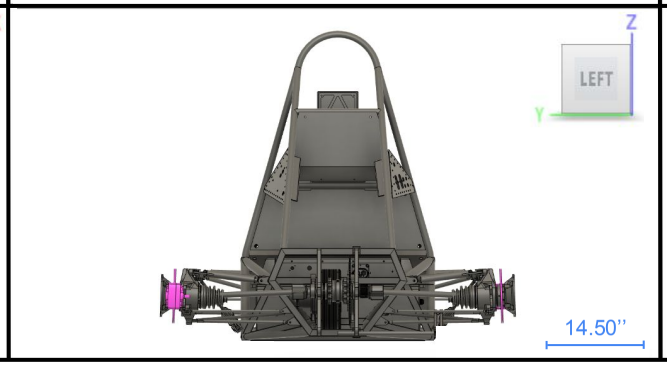
LEFT
14.50"

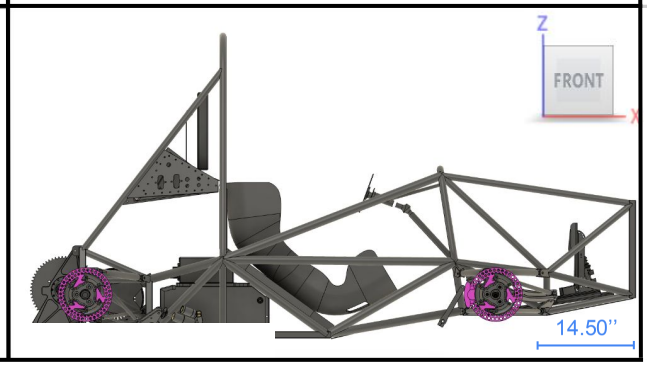
FRONT
14.50"

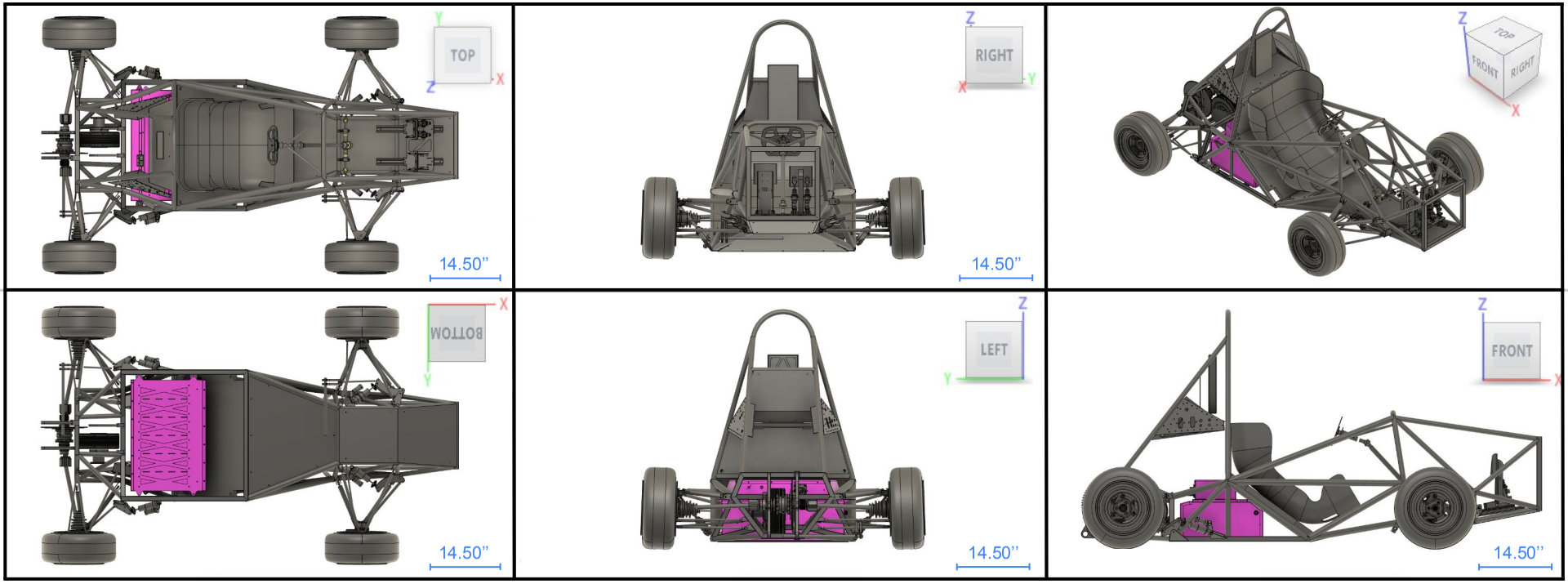
TOP
14.50"
RIGHT
14.50"
TOP
FRONT
RIGHT
BOTTOM
14.50"
LEFT
14.50"
FRONT
14.50"

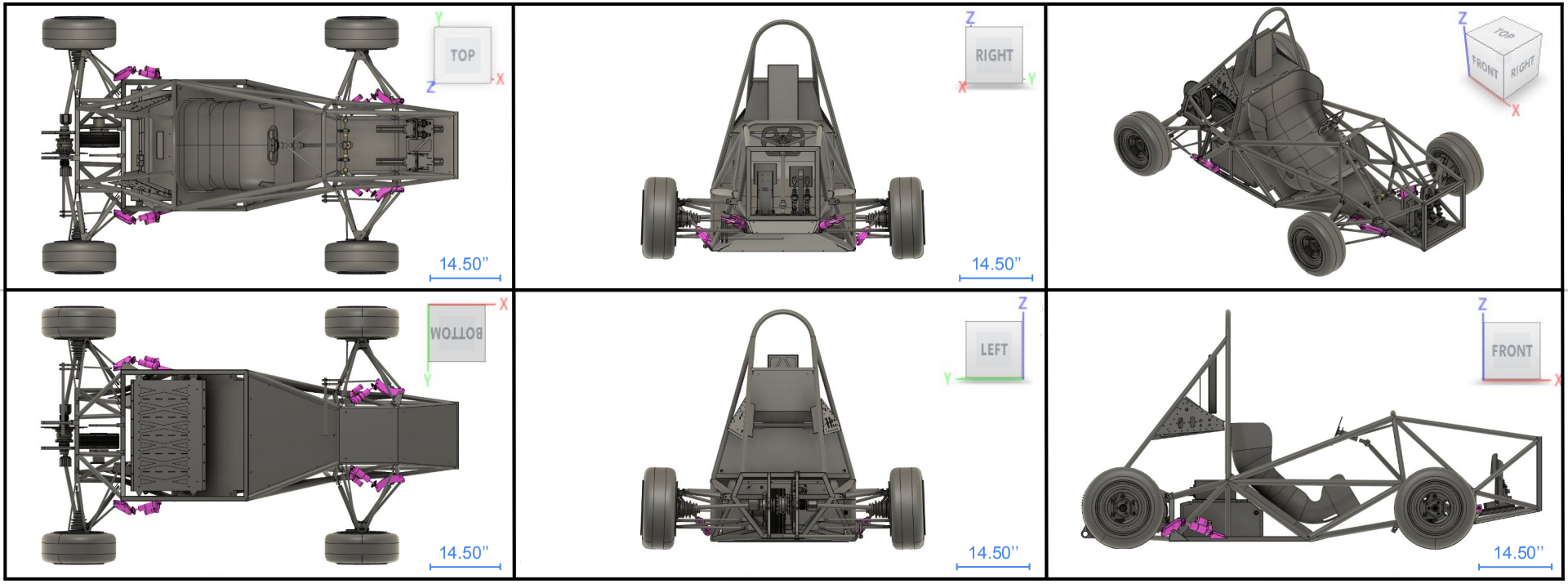
TOP
14.50"
RIGHT
14.50"
TOP
FRONT
RIGHT
BOTTOM
14.50"
LEFT
14.50"
FRONT
14.50"

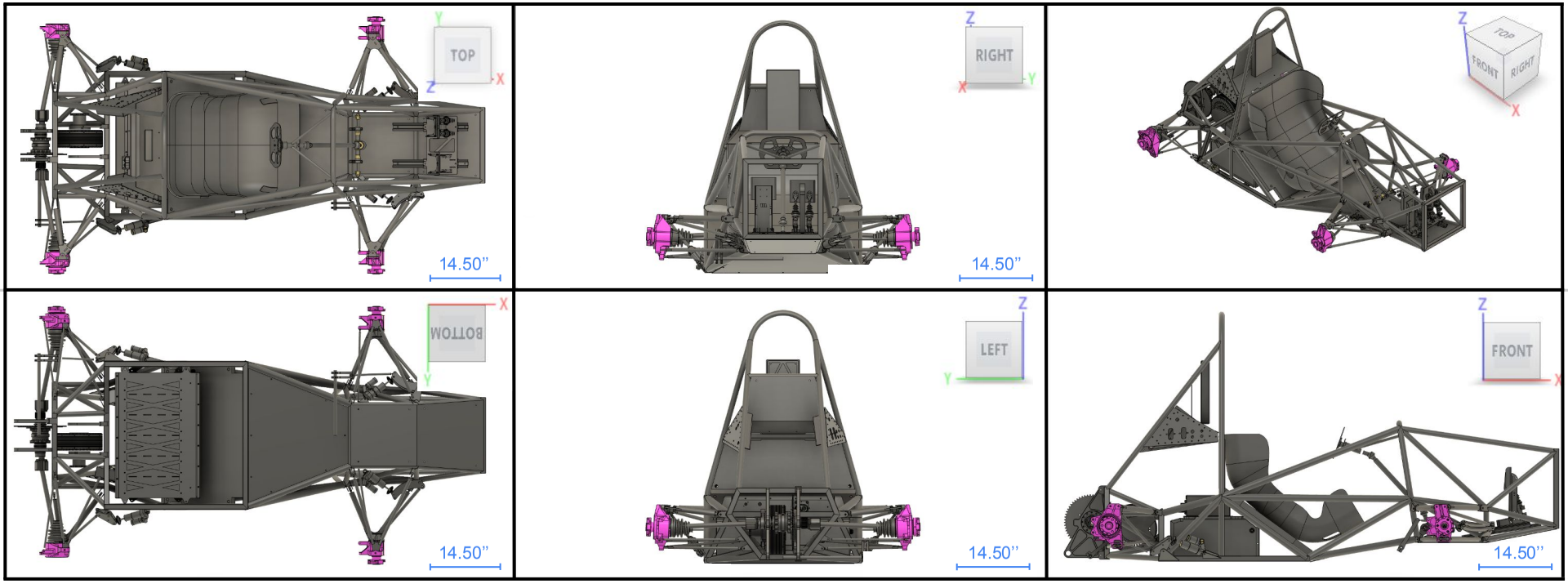
TOP
14.50"
RIGHT
14.50"
TOP
FRONT
RIGHT
BOTTOM
14.50"
LEFT
14.50"
FRONT
14.50"

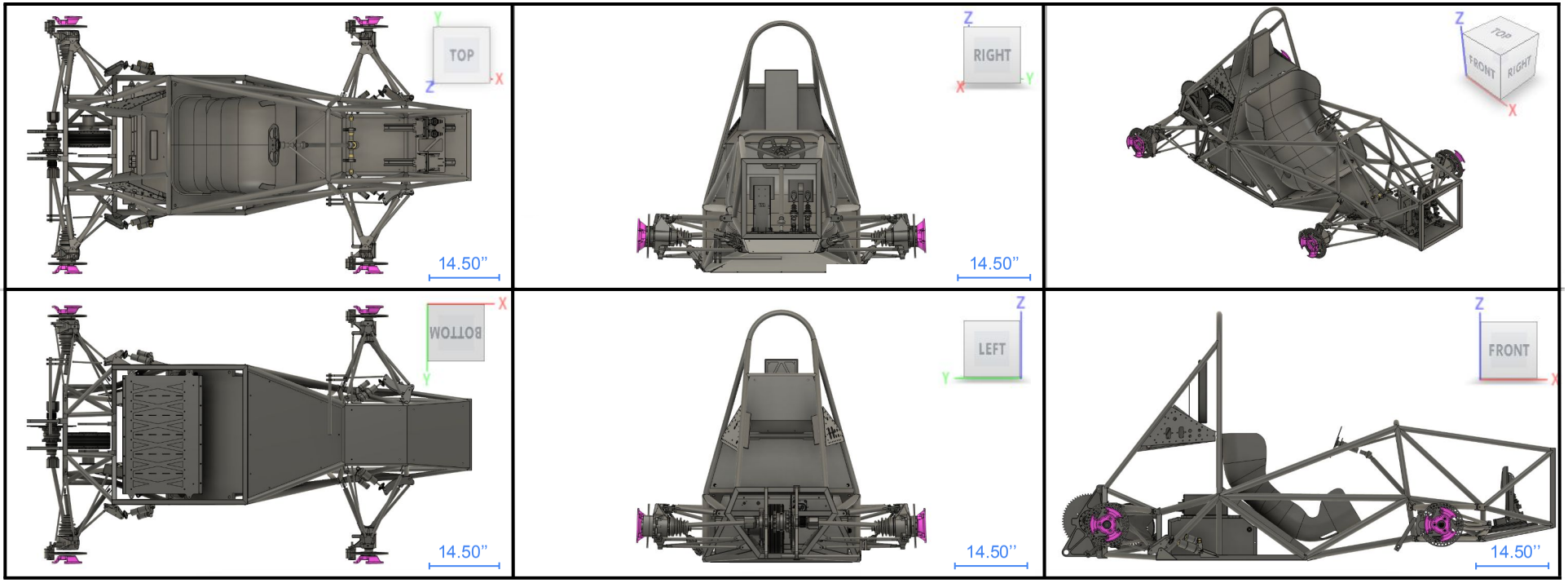
TOP
14.50"
RIGHT
14.50"
TOP
FRONT
RIGHT
BOTTOM
14.50"
LEFT
14.50"
FRONT
14.50"