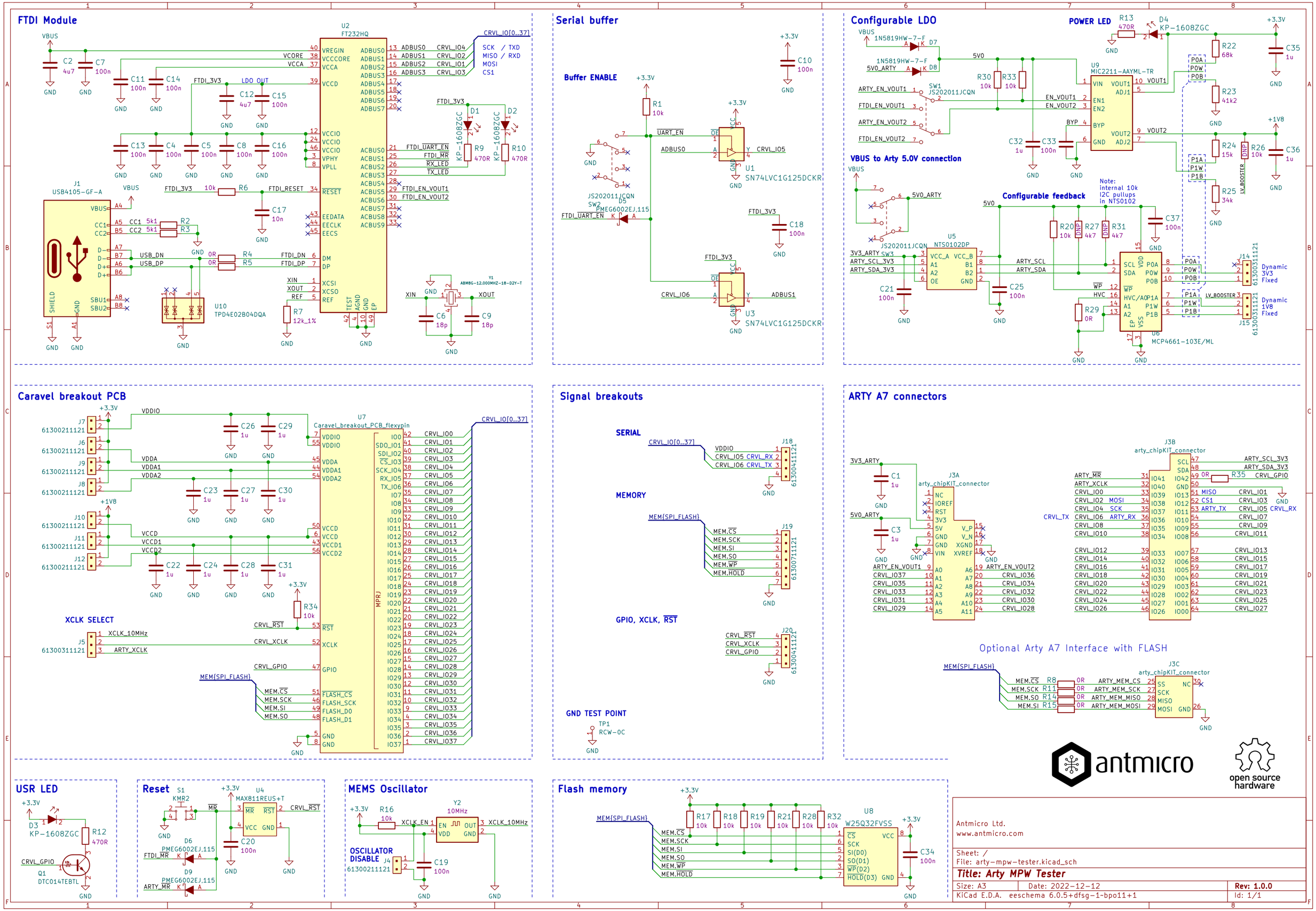
FTDI Module
U2
FT232HQ
J1
USB4105-GF-A
U10
TPD4E02B04DQA
Y1
ABM8G-12.000MHZ-18-D2Y-T
Serial buffer
Buffer ENABLE
U1
SN74LVC1G125DCKR
U3
SN74LVC1G125DCKR
Configurable LDO
POWER LED
U9
MIC2211-AAYML-TR
VBUS to Arty 5.0V connection
Configurable feedback
U5
NTS0102DP
U6
MCP4661-103E/ML
Note:
internal 10k
I2C pullups
in NTS0102
Dynamic
3V3
Fixed
Dynamic
1V8
Fixed
Caravel breakout PCB
U7
Caravel_breakout_PCB_flexypin
XCLK SELECT
Signal breakouts
SERIAL
MEMORY
GPIO, XCLK, RST
GND TEST POINT
ARTY A7 connectors
J3A
arty_chipKIT_connector
J3B
arty_chipKIT_connector
Optional Arty A7 Interface with FLASH
J3C
arty_chipKIT_connector
USR LED
Reset
MEMS Oscillator
OSCILLATOR
DISABLE
Flash memory
U8
W25Q32FVSS
antmicro
open source
hardware
Antmicro Ltd.
www.antmicro.com
Sheet: /
File: arty-mpw-tester.kicad_sch
Title: Arty MPW Tester
Size: A3
Date: 2022-12-12
Rev: 1.0.0
KiCad E.D.A. eeschema 6.0.5+dfsg-1~bpo11+1
Id: 1/1