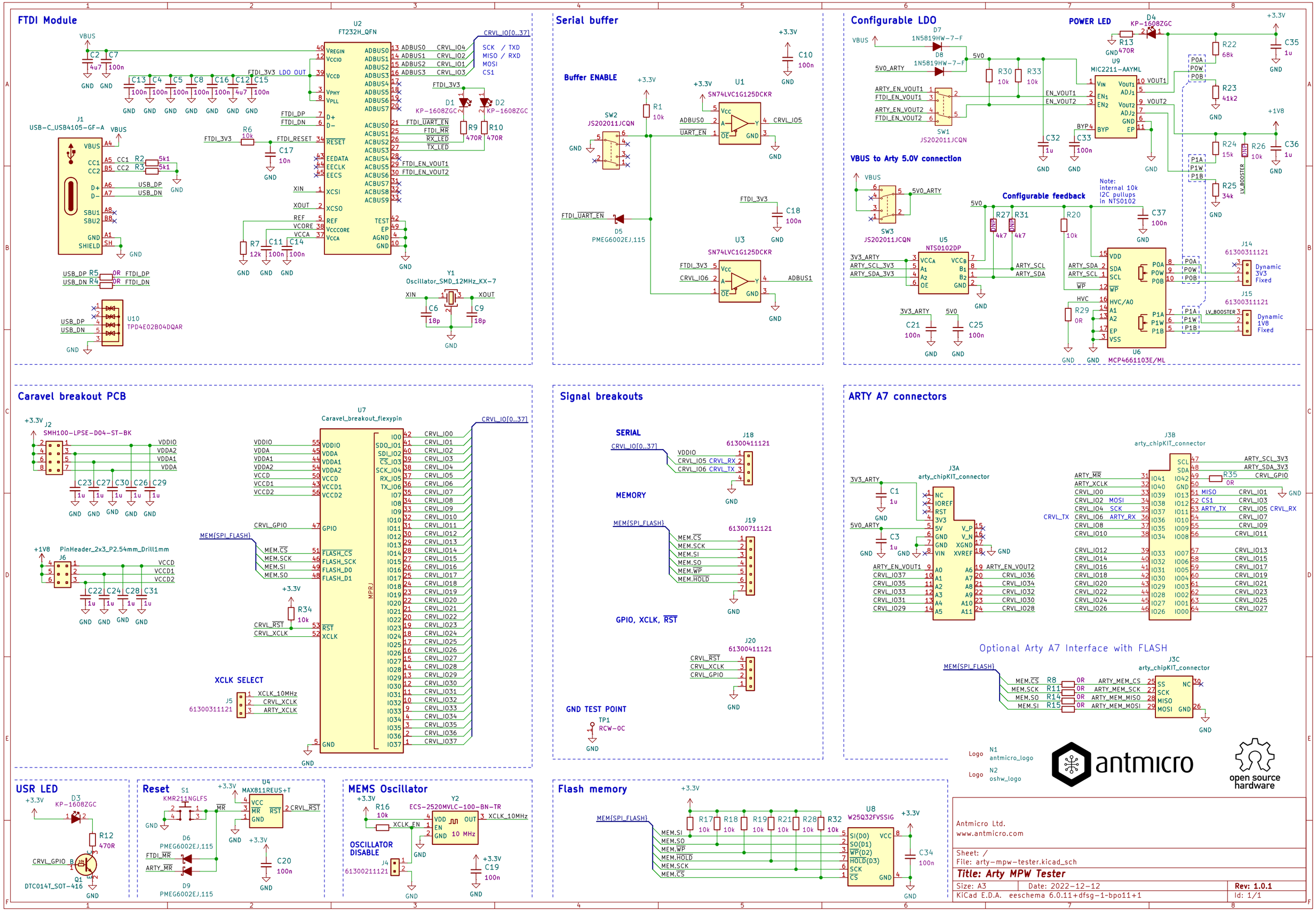
FTDI Module
U2
FT232H_QFN
J1
USB-C_USB4105-GF-A
U10
TPD4E02B04DQAR
Y1
Oscillator_SMD_12MHz_KX-7
Serial buffer
Buffer ENABLE
SW2
JS202011JCQN
U1
SN74LVC1G125DCKR
U3
SN74LVC1G125DCKR
D5
PMEG6002EJ,115
Configurable LDO
POWER LED
D7
1N5819HW-7-F
D8
1N5819HW-7-F
SW1
JS202011JCQN
U9
MIC2211-AAYML
D4
KP-1608ZGC
VBUS to Arty 5.0V connection
SW3
JS202011JCQN
Configurable feedback
U5
NTS0102DP
U6
MCP4661103E/ML
J14
61300311121
Dynamic 3V3 Fixed
J15
61300311121
Dynamic 1V8 Fixed
Caravel breakout PCB
J2
SMH100-LPSE-D04-ST-BK
J6
PinHeader_2x3_P2.54mm_Drill1mm
U7
Caravel_breakout_flexypin
XCLK SELECT
J5
61300311121
Signal breakouts
SERIAL
J18
61300411121
MEMORY
J19
61300711121
GPIO, XCLK, RST
J20
61300411121
GND TEST POINT
TP1
RCW-0C
ARTY A7 connectors
J3A
arty_chipKIT_connector
J3B
arty_chipKIT_connector
Optional Arty A7 Interface with FLASH
J3C
arty_chipKIT_connector
Logo N1 antmicro_logo
Logo N2 oshw_logo
USR LED
D3
KP-1608ZGC
Q1
DTC014T_SOT-416
Reset
S1
KMR211NGLFS
U4
MAX811REUS+T
D6
PMEG6002EJ,115
D9
PMEG6002EJ,115
MEMS Oscillator
Y2
ECS-2520MVLC-100-BN-TR
OSCILLATOR DISABLE
J4
61300211121
Flash memory
U8
W25Q32FVSSIG
Antmicro Ltd.
www.antmicro.com
Sheet: /
File: arty-mpw-tester.kicad_sch
Title: Arty MPW Tester
Size: A3
Date: 2022-12-12
Rev: 1.0.1
KiCad E.D.A. eeschema 6.0.11+dfsg-1-bpo11+1
Id: 1/1