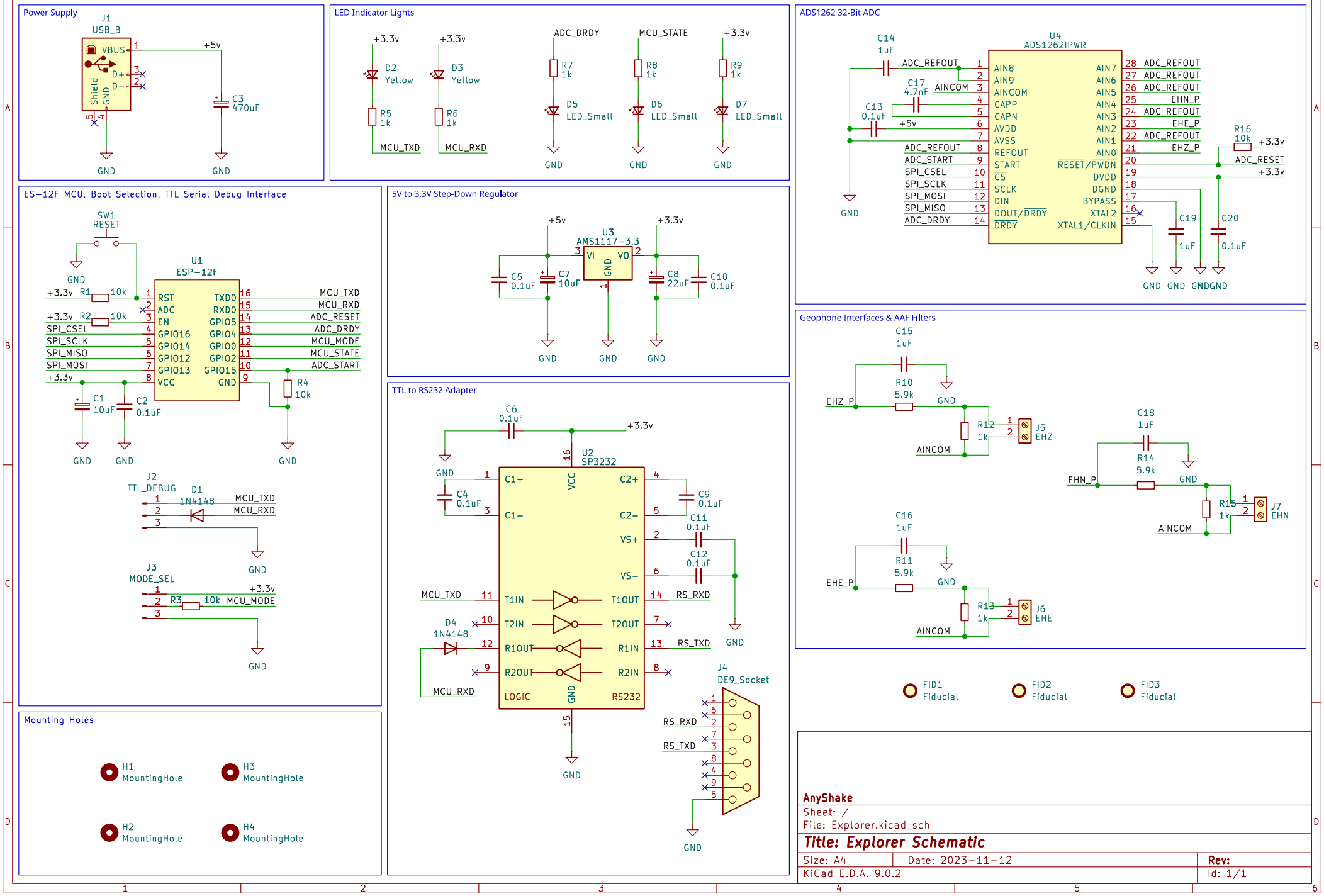
Power Supply
J1
USB_B
VBUS
D+
D−
Shield
GND
+5v
C3
470uF
GND
LED Indicator Lights
+3.3v
D2
Yellow
R5
1k
MCU_TXD
D3
Yellow
R6
1k
MCU_RXD
ADC_DRDY
R7
1k
D5
LED_Small
MCU_STATE
R8
1k
D6
LED_Small
R9
1k
D7
LED_Small
ADC1262 32-Bit ADC
U4
ADS1262IPWR
C14
1uF
ADC_REFOUT
C17
4.7nF
AINCOM
C13
0.1uF
+5v
AIN8
AIN9
AINCOM
CAPP
CAPN
AVDD
AVSS
REFOUT
START
CS
SCLK
DIN
DOUT/DRDY
DRDY
AIN7
AIN6
AIN5
AIN4
AIN3
AIN2
AIN1
AIN0
RESET/PWDN
DVDD
DGND
BYPASS
XTAL2
XTAL1/CLKIN
ADC_REFOUT
ADC_START
SPI_CSEL
SPI_SCLK
SPI_MOSI
SPI_MISO
ADC_DRDY
ADC_REFOUT
ADC_REFOUT
ADC_REFOUT
EHN_P
ADC_REFOUT
EHE_P
ADC_REFOUT
EHZ_P
R16
10k
+3.3v
ADC_RESET
+3.3v
C19
1uF
C20
0.1uF
GND GND GNDGND
ES−12F MCU, Boot Selection, TTL Serial Debug Interface
SW1
RESET
U1
ESP−12F
RST
ADC
EN
GPIO16
GPIO14
GPIO12
GPIO13
VCC
TXD0
RXD0
GPIO5
GPIO4
GPIO0
GPIO2
GPIO15
GND
+3.3v R1 10k
+3.3v R2 10k
SPI_CSEL
SPI_SCLK
SPI_MISO
SPI_MOSI
+3.3v
MCU_TXD
MCU_RXD
ADC_RESET
ADC_DRDY
MCU_MODE
MCU_STATE
ADC_START
R4
10k
C1
10uF
C2
0.1uF
J2
TTL_DEBUG
D1
1N4148
MCU_TXD
MCU_RXD
J3
MODE_SEL
R3 10k
MCU_MODE
+3.3v
5V to 3.3V Step-Down Regulator
U3
AMS1117−3.3
VI
VO
GND
+5v
+3.3v
C5
0.1uF
C7
10uF
C8
22uF
C10
0.1uF
TTL to RS232 Adapter
C6
0.1uF
+3.3v
U2
SP3232
C1+
C1−
VCC
C2+
C2−
VS+
VS−
T1IN
T2IN
R1OUT
R2OUT
LOGIC
GND
T1OUT
T2OUT
R1IN
R2IN
RS232
C4
0.1uF
C9
0.1uF
C11
0.1uF
C12
0.1uF
MCU_TXD
D4
1N4148
MCU_RXD
RS_RXD
RS_TXD
J4
DE9_Socket
Geophone Interfaces & AAF Filters
C15
1uF
R10
5.9k
EHZ_P
R12
1k
J5
EHZ
AINCOM
C18
1uF
R14
5.9k
EHN_P
R15
1k
J7
EHN
C16
1uF
R11
5.9k
EHE_P
R13
1k
J6
EHE
FID1
Fiducial
FID2
Fiducial
FID3
Fiducial
Mounting Holes
H1
MountingHole
H3
MountingHole
H2
MountingHole
H4
MountingHole
AnyShake
Sheet: /
File: Explorer.kicad_sch
Title: Explorer Schematic
Size: A4
Date: 2023−11−12
Rev:
KiCad E.D.A. 9.0.2
Id: 1/1