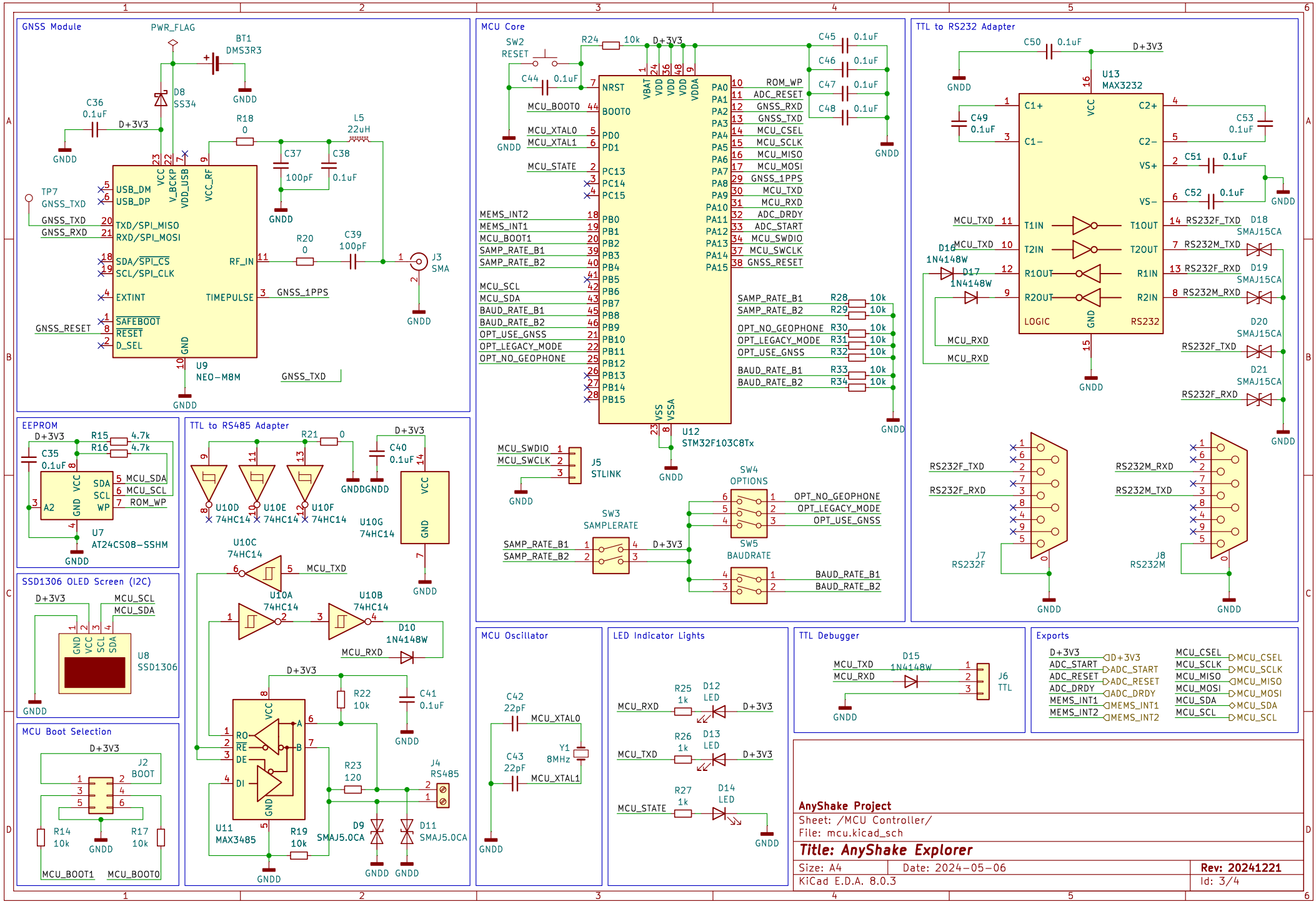
GNSS Module
PWR_FLAG
BT1
DMS3R3
D8
SS34
C36
0.1uF
D+3V3
GNDD
R18
0
L5
22uH
C37
100pF
C38
0.1uF
TP7
GNSS_TXD
GNSS_TXD
GNSS_RXD
USB_DM
USB_DP
TXD/SPI_MISO
RXD/SPI_MOSI
SDA/SPI_CS
SCL/SPI_CLK
EXTINT
SAFEBOOT
RESET
D_SEL
GNSS_RESET
VCC
V_BCKP
VDD_USB
VCC_RF
RF_IN
TIMEPULSE
GND
R20
0
C39
100pF
J3
SMA
GNSS_1PPS
U9
NEO-M8M
GNSS_TXD
MCU Core
SW2
RESET
R24
10k
C44
0.1uF
NRST
BOOT0
MCU_BOOT0
MCU_XTAL0
MCU_XTAL1
PD0
PD1
MCU_STATE
PC13
PC14
PC15
MEMS_INT2
MEMS_INT1
MCU_BOOT1
SAMP_RATE_B1
SAMP_RATE_B2
MCU_SCL
MCU_SDA
BAUD_RATE_B1
BAUD_RATE_B2
OPT_USE_GNSS
OPT_LEGACY_MODE
OPT_NO_GEOPHONE
PB0
PB1
PB2
PB3
PB4
PB5
PB6
PB7
PB8
PB9
PB10
PB11
PB12
PB13
PB14
PB15
VBAT
VDD
VDDA
VSS
VSSA
PA0
PA1
PA2
PA3
PA4
PA5
PA6
PA7
PA8
PA9
PA10
PA11
PA12
PA13
PA14
PA15
ROM_WP
ADC_RESET
GNSS_RXD
GNSS_TXD
MCU_CSEL
MCU_SCLK
MCU_MISO
MCU_MOSI
GNSS_1PPS
MCU_TXD
MCU_RXD
ADC_DRDY
ADC_START
MCU_SWDIO
MCU_SWCLK
GNSS_RESET
C45
0.1uF
C46
0.1uF
C47
0.1uF
C48
0.1uF
SAMP_RATE_B1
SAMP_RATE_B2
OPT_NO_GEOPHONE
OPT_LEGACY_MODE
OPT_USE_GNSS
BAUD_RATE_B1
BAUD_RATE_B2
R28
R29
R30
R31
R32
R33
R34
10k
U12
STM32F103C8Tx
J5
STLINK
SW4
OPTIONS
SW3
SAMPLERATE
SW5
BAUDRATE
TTL to RS232 Adapter
C50
0.1uF
U13
MAX3232
C49
0.1uF
C53
0.1uF
C51
0.1uF
C52
0.1uF
C1+
C1-
C2+
C2-
VS+
VS-
T1IN
T2IN
R1OUT
R2OUT
T1OUT
T2OUT
R1IN
R2IN
LOGIC
RS232
RS232F_TXD
RS232F_RXD
RS232M_TXD
RS232M_RXD
D16
1N4148W
D17
1N4148W
D18
SMAJ15CA
D19
SMAJ15CA
D20
SMAJ15CA
D21
SMAJ15CA
J7
RS232F
J8
RS232M
EEPROM
R15
4.7k
R16
4.7k
C35
0.1uF
SDA
SCL
WP
A2
U7
AT24CS08-SSHM
TTL to RS485 Adapter
R21
0
C40
0.1uF
U10D
74HC14
U10E
74HC14
U10F
74HC14
U10G
74HC14
U10C
74HC14
U10A
74HC14
U10B
74HC14
MCU_TXD
MCU_RXD
D10
1N4148W
R22
10k
C41
0.1uF
RO
RE
DE
DI
A
B
U11
MAX3485
R23
120
J4
RS485
R19
10k
D9
SMAJ5.0CA
D11
SMAJ5.0CA
SSD1306 OLED Screen (I2C)
U8
SSD1306
MCU Boot Selection
J2
BOOT
R14
10k
R17
10k
MCU_BOOT1
MCU_BOOT0
MCU Oscillator
C42
22pF
C43
22pF
Y1
8MHz
LED Indicator Lights
R25
1k
D12
LED
R26
1k
D13
LED
R27
1k
D14
LED
TTL Debugger
D15
1N4148W
J6
TTL
Exports
D+3V3
ADC_START
ADC_RESET
ADC_DRDY
MEMS_INT1
MEMS_INT2
MCU_CSEL
MCU_SCLK
MCU_MISO
MCU_MOSI
MCU_SDA
MCU_SCL
AnyShake Project
Sheet: /MCU Controller/
File: mcu.kicad_sch
Title: AnyShake Explorer
Size: A4
Date: 2024-05-06
Rev: 20241221
KiCad E.D.A. 8.0.3
Id: 3/4