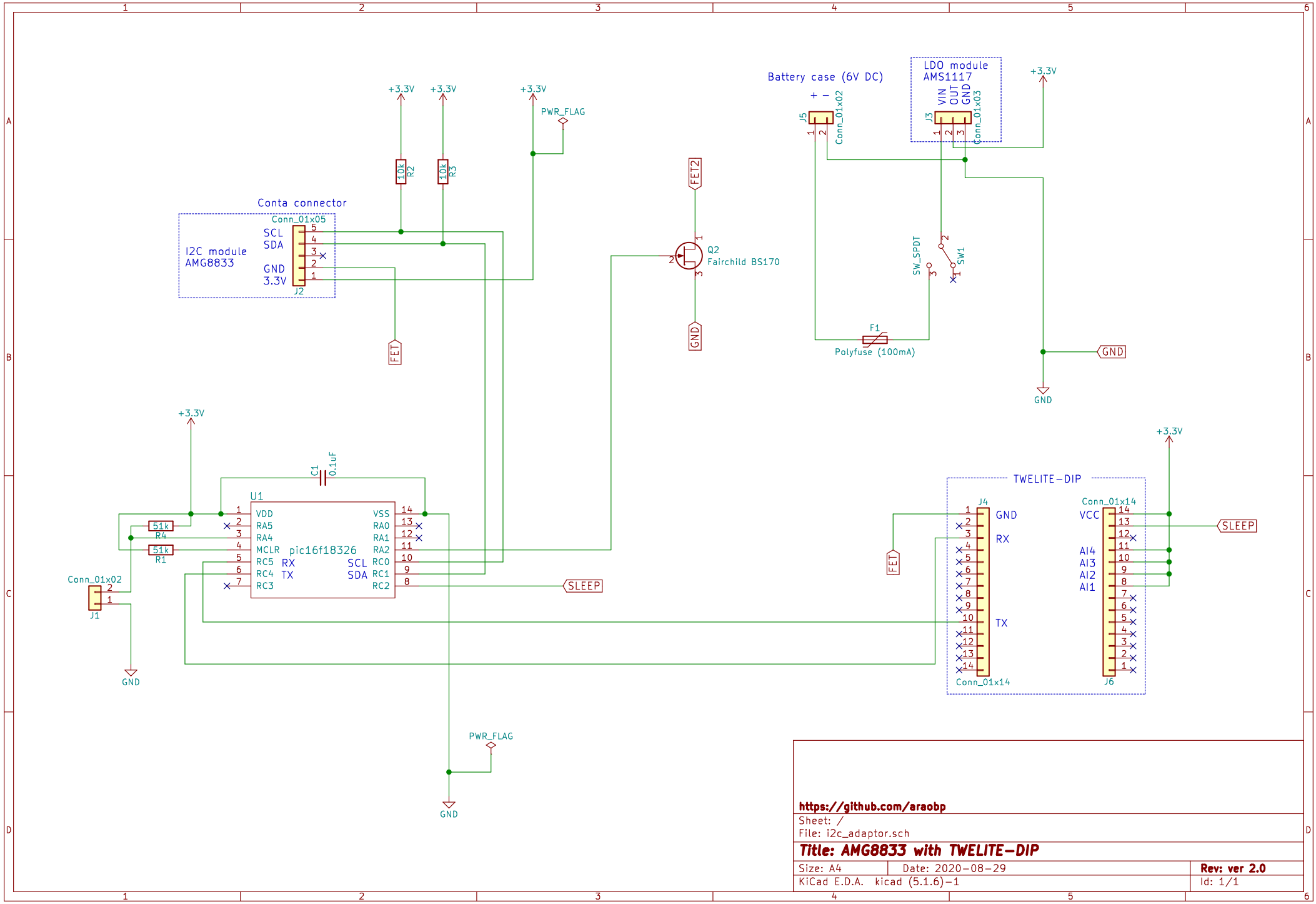

https://github.com/araobp

Sheet: /

File: i2c_adaptor.sch

Title: AMG8833 with TWELITE-DIP

Size: A4	Date: 2020-08-29	Rev: ver 2.0
KiCad E.D.A. kicad (5.1.6)-1		Id: 1/1