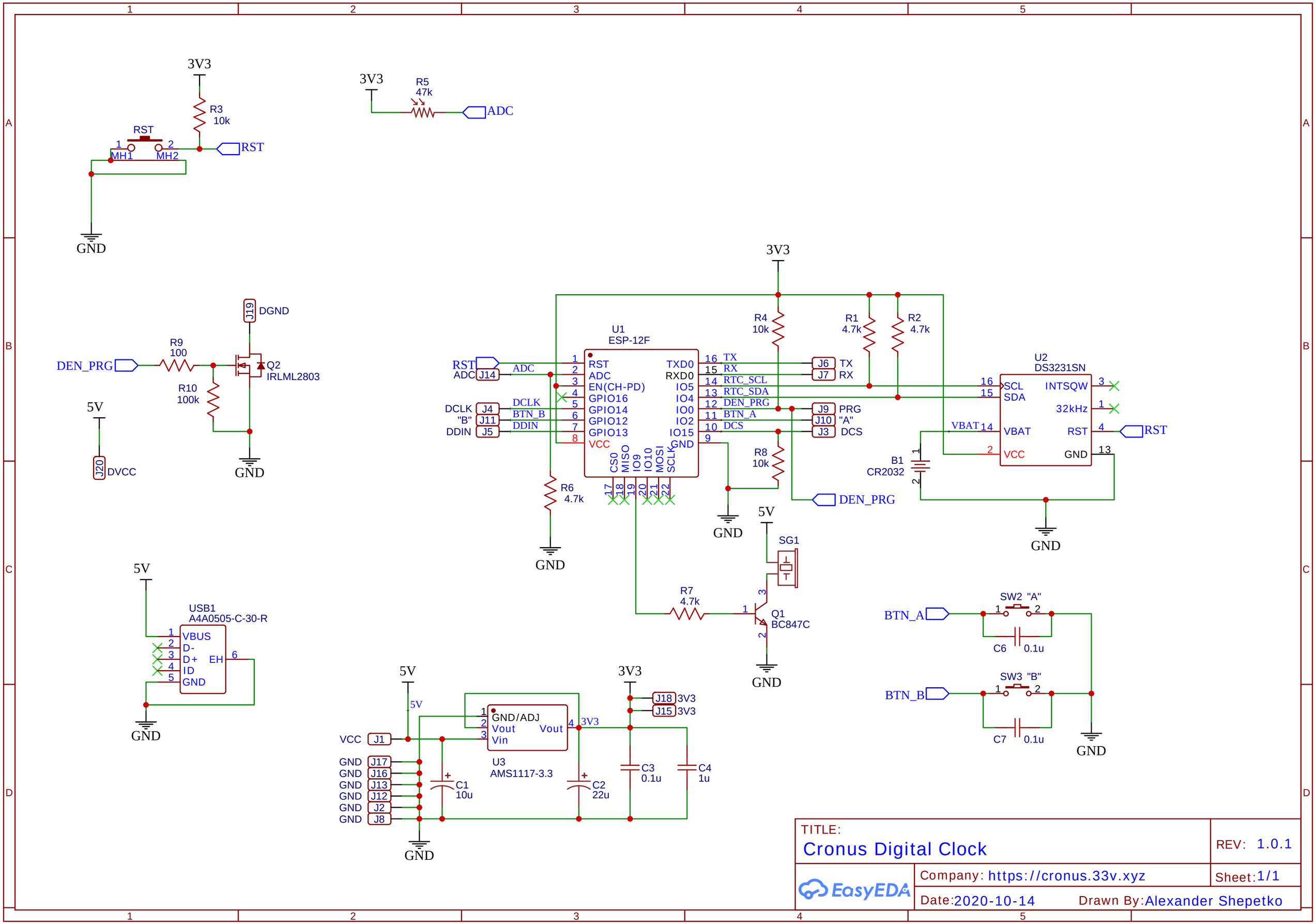

TITLE:
Cronus Digital Clock

REV: 1.0.1

Company: https://cronus.33v.xyz

Sheet: 1/1

Date: 2020-10-14

Drawn By: Alexander Shepetko