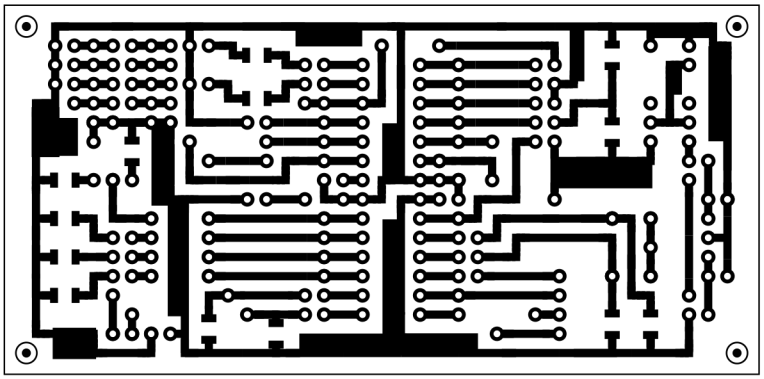

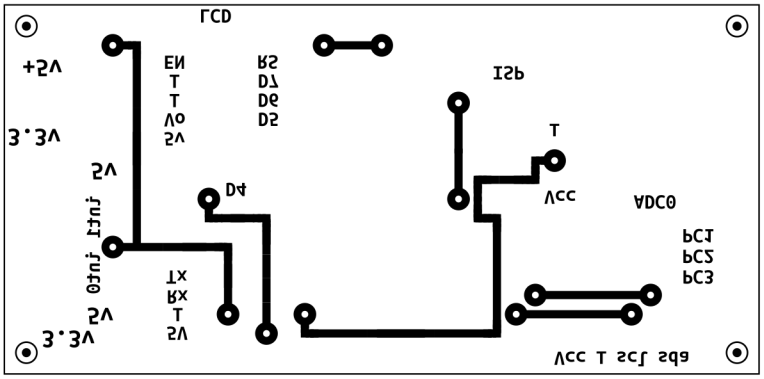
Vcc L SCL SDA
PC3
PC2
PC1
ADC0
Vcc
L
9SI
D2
D9
D7
D8
RS
EN
L
L
5V
5V+
LCD
D4
5V
3.3V
Output Fuel
5V
L
RX
TX
5V
3.3V