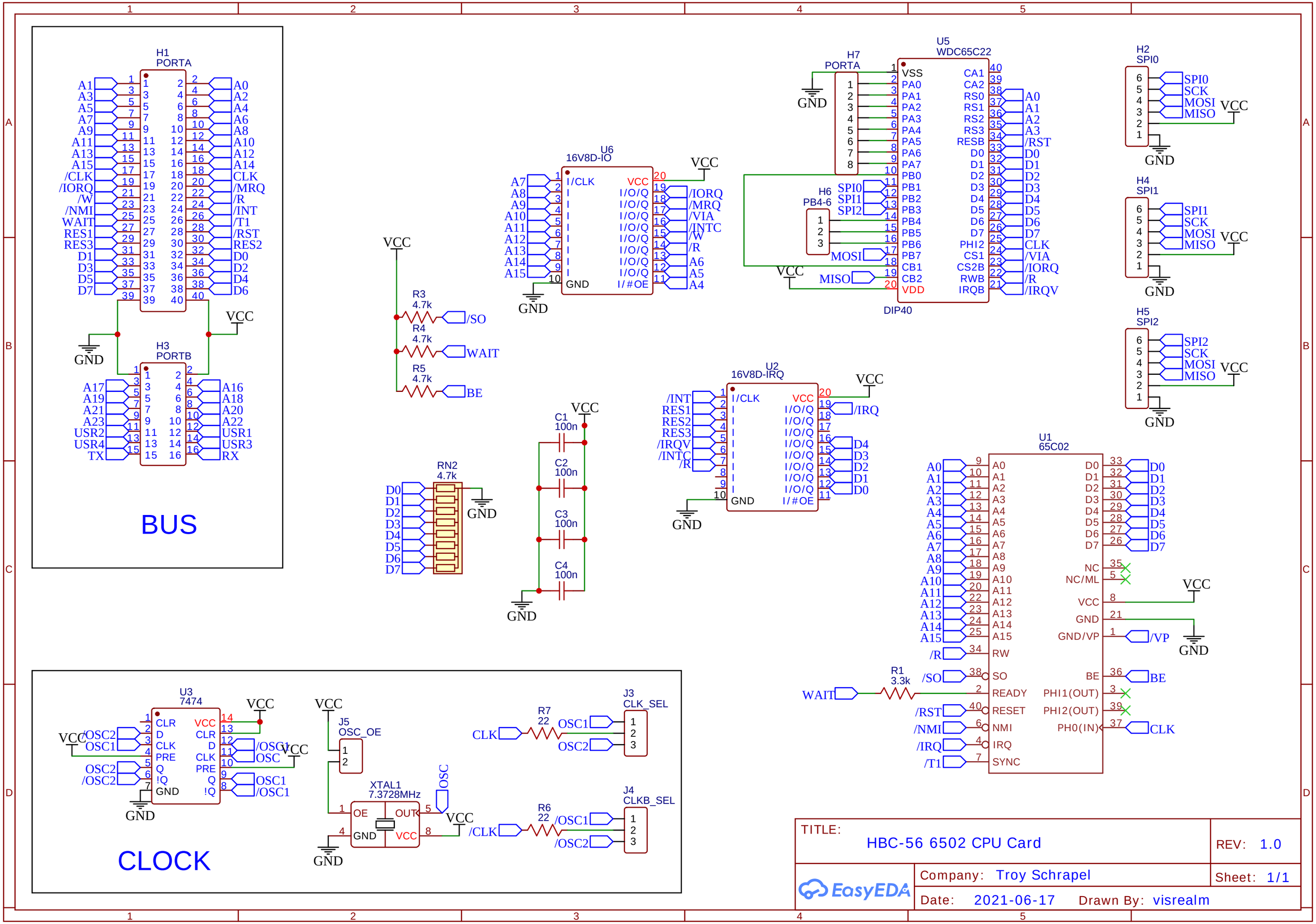
H1
PORTA
H3
PORTB
BUS
U6
16V8D-IO
U5
WDC65C22
DIP40
H7
PORTA
H6
PB4-6
H2
SPI0
H4
SPI1
H5
SPI2
R3
4.7k
R4
4.7k
R5
4.7k
/SO
WAIT
BE
RN2
4.7k
C1
100n
C2
100n
C3
100n
C4
100n
U2
16V8D-IRQ
/IRQ
U1
65C02
R1
3.3k
/VP
U3
7474
CLOCK
J5
OSC_OE
XTAL1
7.3728MHz
OSC
R7
22
J3
CLK_SEL
R6
22
J4
CLKB_SEL
TITLE:
HBC-56 6502 CPU Card
REV: 1.0
Company: Troy Schrapel
Sheet: 1/1
Date: 2021-06-17
Drawn By: visrealm
EasyEDA