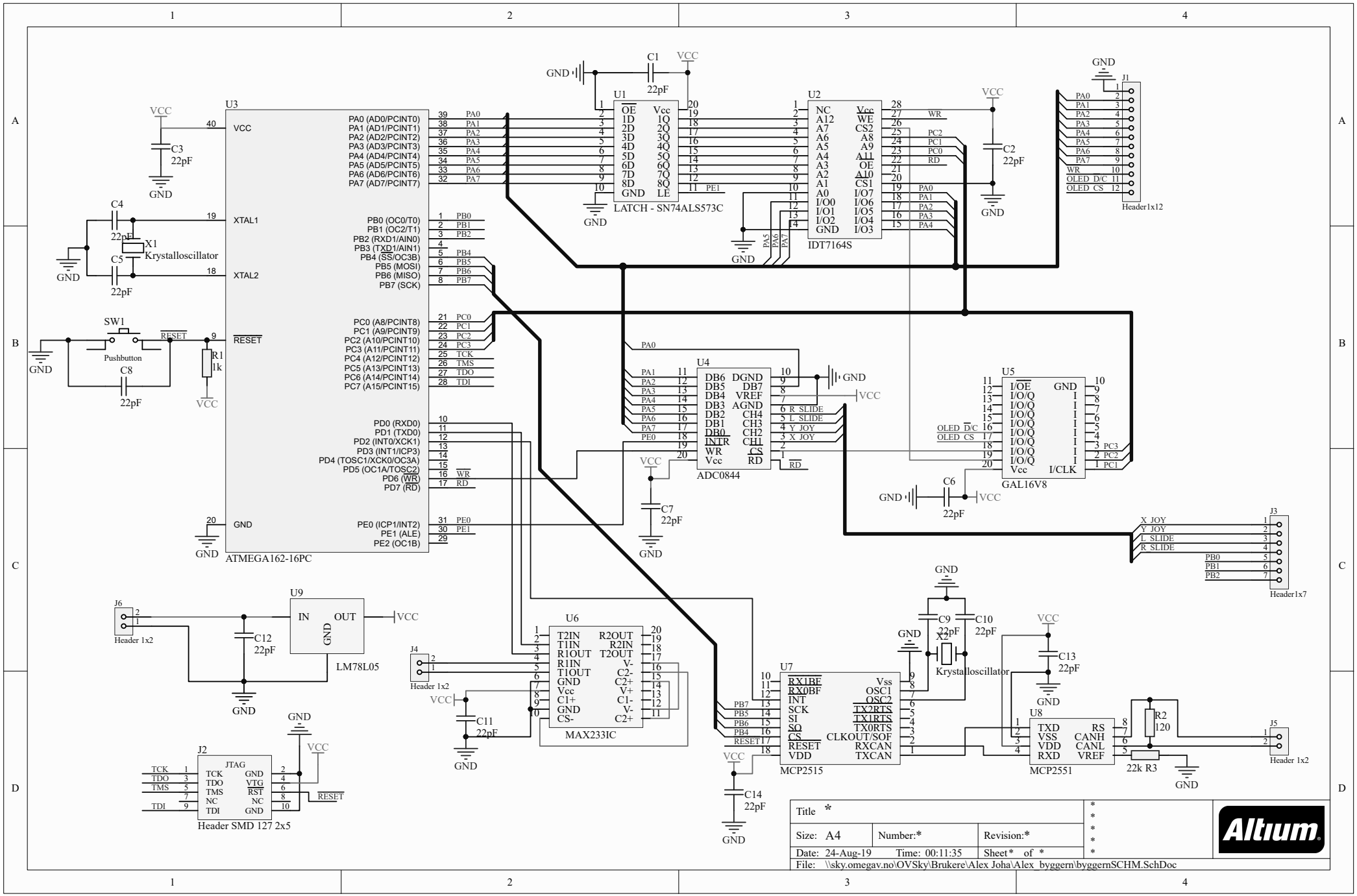
U3
ATMEGA162-16PC
VCC
GND
C3
22pF
C4
22pF
C5
22pF
X1
Krystalloscillator
XTAL1
XTAL2
SW1
Pushbutton
RESET
R1
1k
C8
22pF
PA0 (AD0/PCINT0)
PA1 (AD1/PCINT1)
PA2 (AD2/PCINT2)
PA3 (AD3/PCINT3)
PA4 (AD4/PCINT4)
PA5 (AD5/PCINT5)
PA6 (AD6/PCINT6)
PA7 (AD7/PCINT7)
PB0 (OC0/T0)
PB1 (OC2/T1)
PB2 (RXD1/AIN0)
PB3 (TXD1/AIN1)
PB4 (SS/OC3B)
PB5 (MOSI)
PB6 (MISO)
PB7 (SCK)
PC0 (A8/PCINT8)
PC1 (A9/PCINT9)
PC2 (A10/PCINT10)
PC3 (A11/PCINT11)
PC4 (A12/PCINT12)
PC5 (A13/PCINT13)
PC6 (A14/PCINT14)
PC7 (A15/PCINT15)
PD0 (RXD0)
PD1 (TXD0)
PD2 (INT0/XCK1)
PD3 (INT1/ICP3)
PD4 (TOSC1/XCK0/OC3A)
PD5 (OC1A/TOSC2)
PD6 (WR)
PD7 (RD)
PE0 (ICP1/INT2)
PE1 (ALE)
PE2 (OC1B)
U1
LATCH - SN74ALS573C
C1
22pF
U2
IDT7164S
C2
22pF
J1
Header1x12
OLED D/C
OLED CS
U4
ADC0844
C7
22pF
U5
GAL16V8
C6
22pF
J3
Header1x7
X JOY
Y JOY
L SLIDE
R SLIDE
J6
Header 1x2
U9
LM78L05
C12
22pF
J4
Header 1x2
U6
MAX233IC
C11
22pF
J2
Header SMD 127 2x5
JTAG
TCK
TDO
TMS
TDI
RESET
U7
MCP2515
C9
22pF
C10
22pF
X2
Krystalloscillator
C13
22pF
C14
22pF
U8
MCP2551
R2
120
22k R3
J5
Header 1x2
Title *
Size: A4
Number:*
Revision:*
Date: 24-Aug-19
Time: 00:11:35
Sheet* of *
File: \\sky.omegav.no\OVSky\Brukere\Alex Joha\Alex_byggern\byggernSCHM.SchDoc
Altium