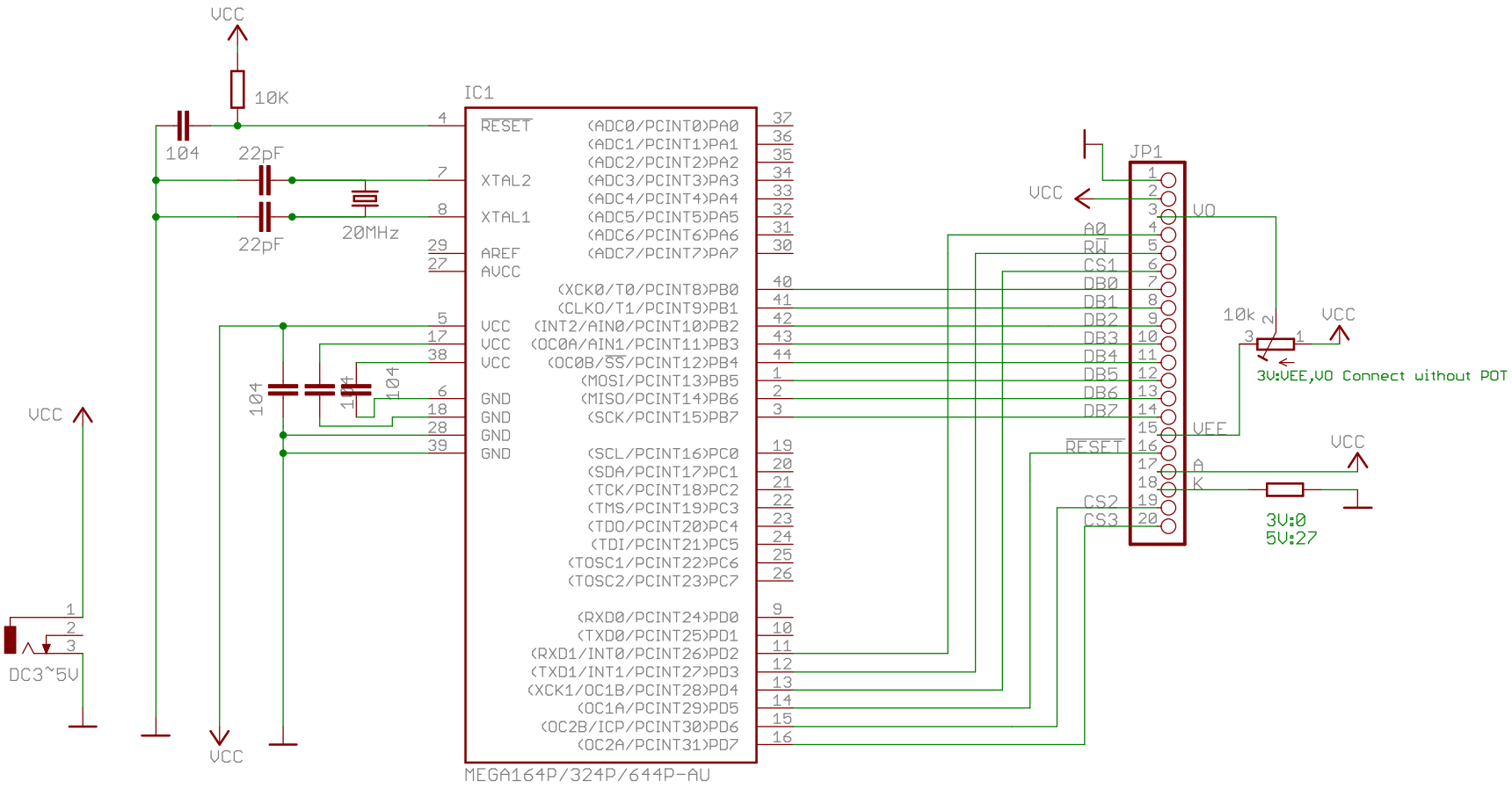

Fuse Low byte : 0xd7
Fuse High byte : 0xd9

Winstar WG20232A-TMI-V#A with 202x32 Graphic LCD	
TITLE: WG20232A	
Document Number:	REV:
Date: 2013/01/31 17:55:33	Sheet: 1/1