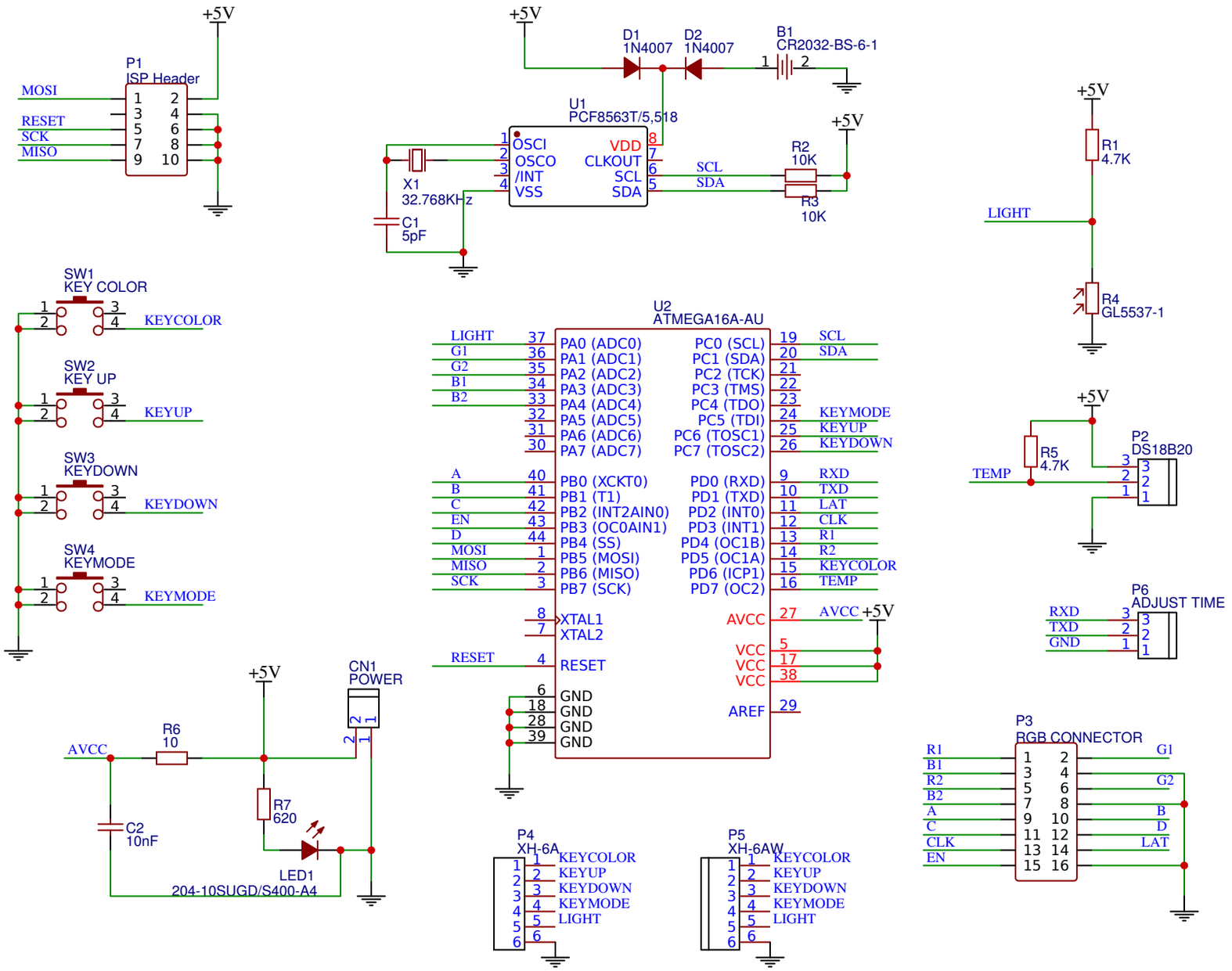

TITLE: LED6432Clock	REV: 2.0
Date: 2019-03-18	Sheet: 1/1
EasyEDA V4.5.6	Drawn By: 卜晓旸