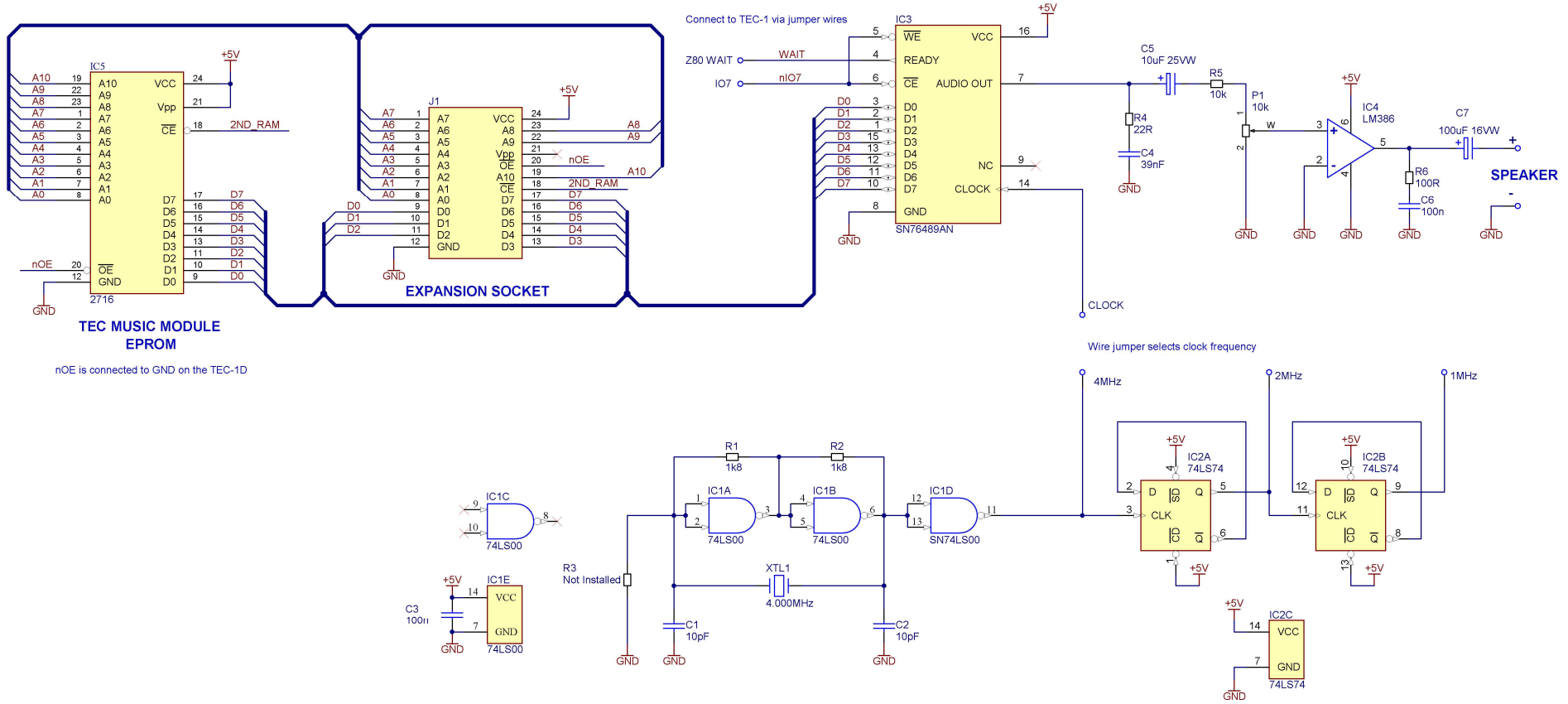

Reverse engineered by Craig Jones from Ken Stone's Prototype of the Talking Electronics Music Module.

Title	TEC MUSIC MODULE		
Size: A3	Number:	Revision: 1	
Date: 17/09/2022	Time: 9:02:04 AM	Sheet 1 of 1	
File: TEC-MUSIC-01.SchDoc			