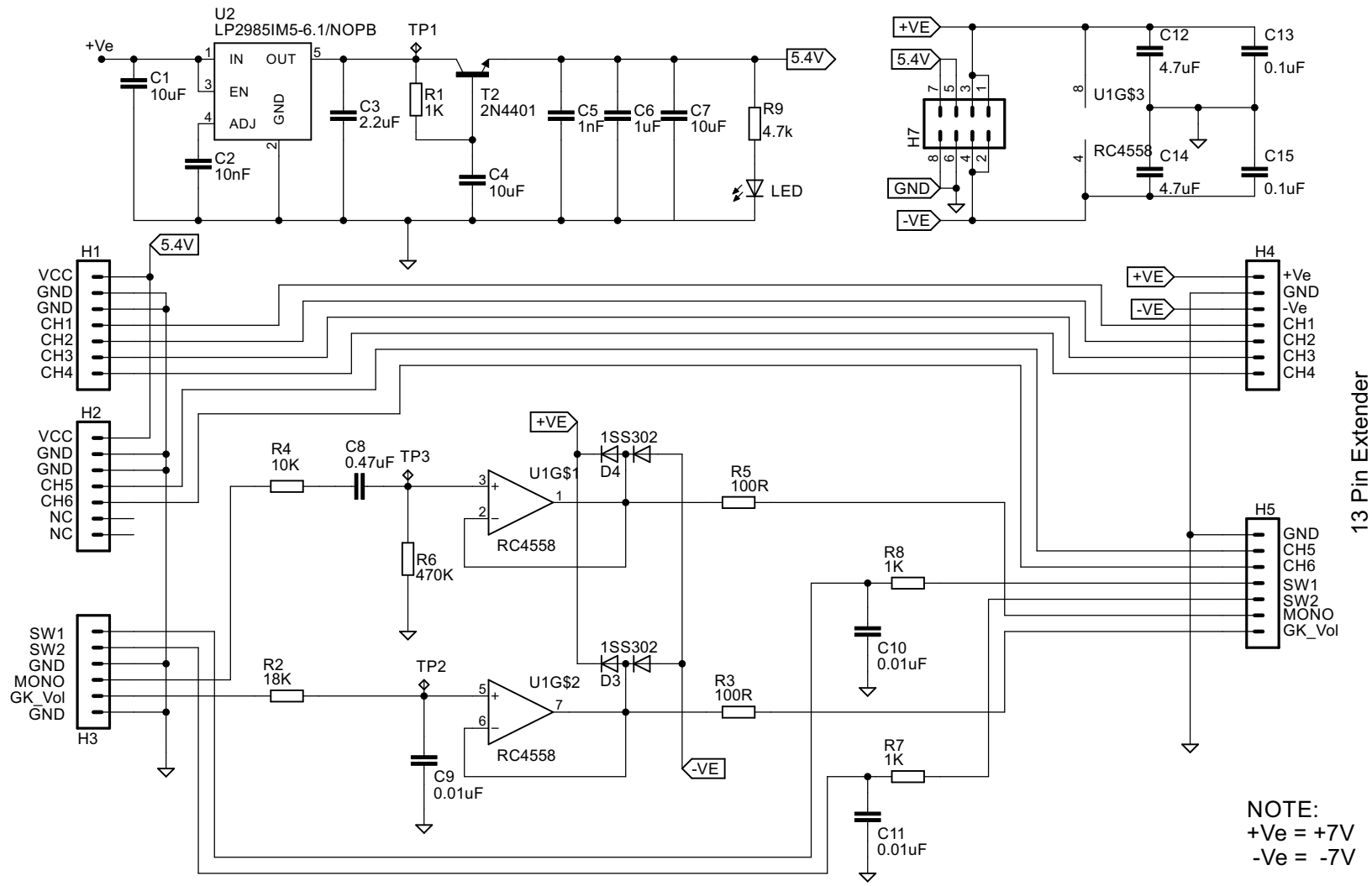

GK Internal Breakout for Nexus Project by Cycfi Research is licensed under a Creative Commons Attribution-ShareAlike 4.0 International License.

Copyright CYCFI Research Inc. 2013-2017

TITLE: GK Roland Breakout	
Document Number: 2017070401	REV: 0.9
Date: 7/4/2017 9:21:33 AM	Sheet: 1/1