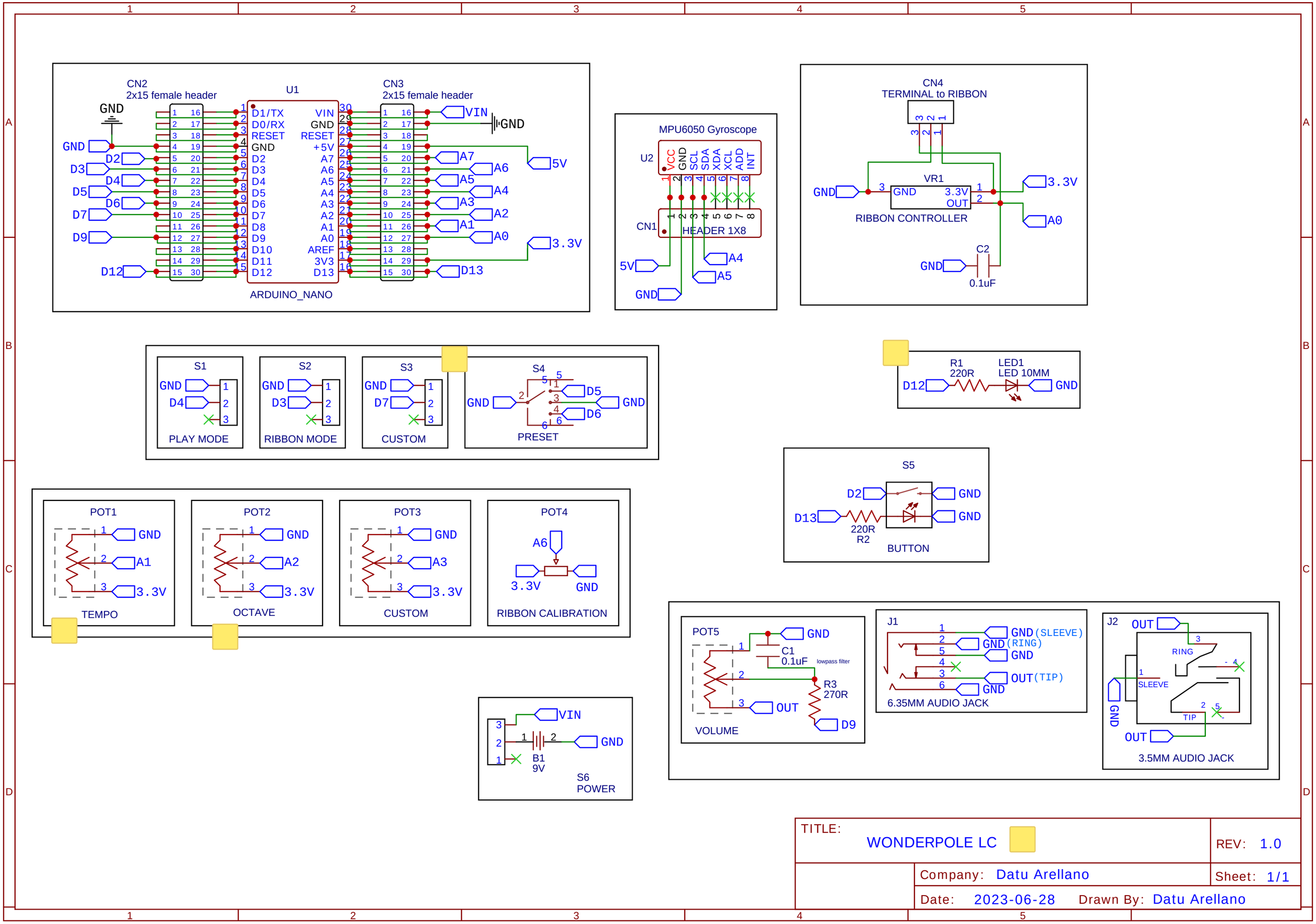
CN2
2x15 female header
U1
CN3
2x15 female header
ARDUINO_NANO
MPU6050 Gyroscope
U2
CN1
HEADER 1X8
CN4
TERMINAL to RIBBON
VR1
RIBBON CONTROLLER
C2
0.1uF
S1
PLAY MODE
S2
RIBBON MODE
S3
CUSTOM
S4
PRESET
R1
220R
LED1
LED 10MM
S5
BUTTON
R2
POT1
TEMPO
POT2
OCTAVE
POT3
CUSTOM
POT4
RIBBON CALIBRATION
POT5
VOLUME
C1
0.1uF
lowpass filter
R3
270R
J1
6.35MM AUDIO JACK
J2
3.5MM AUDIO JACK
B1
9V
S6
POWER
TITLE:
WONDERPOLE LC
REV: 1.0
Company: Datu Arellano
Sheet: 1/1
Date: 2023-06-28
Drawn By: Datu Arellano