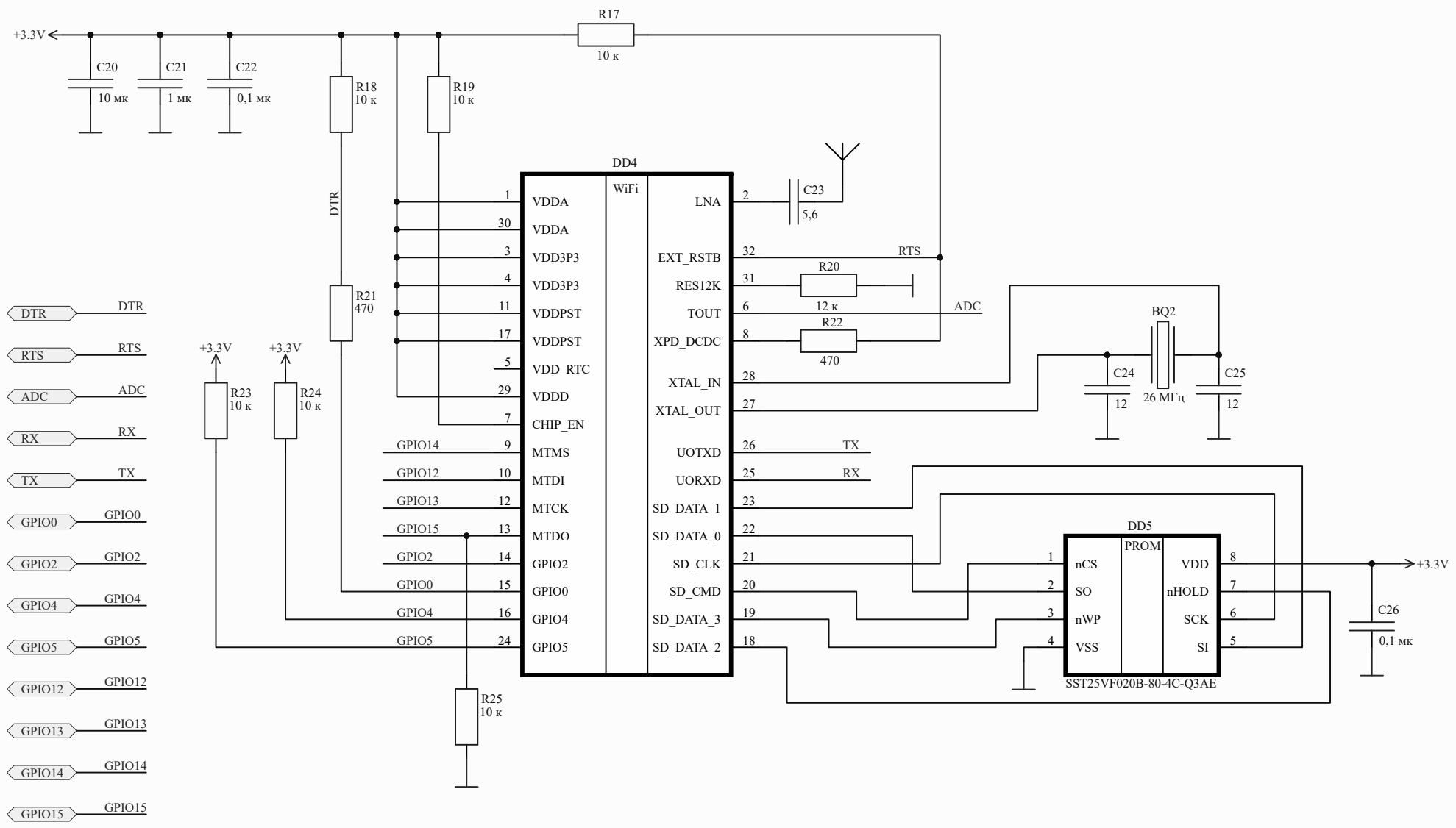

Title		
Size A4	Number	Revision
Date: 22.05.2017		Sheet of
File: C:\Projects\..\ESP8266.SchDoc		Drawn By: