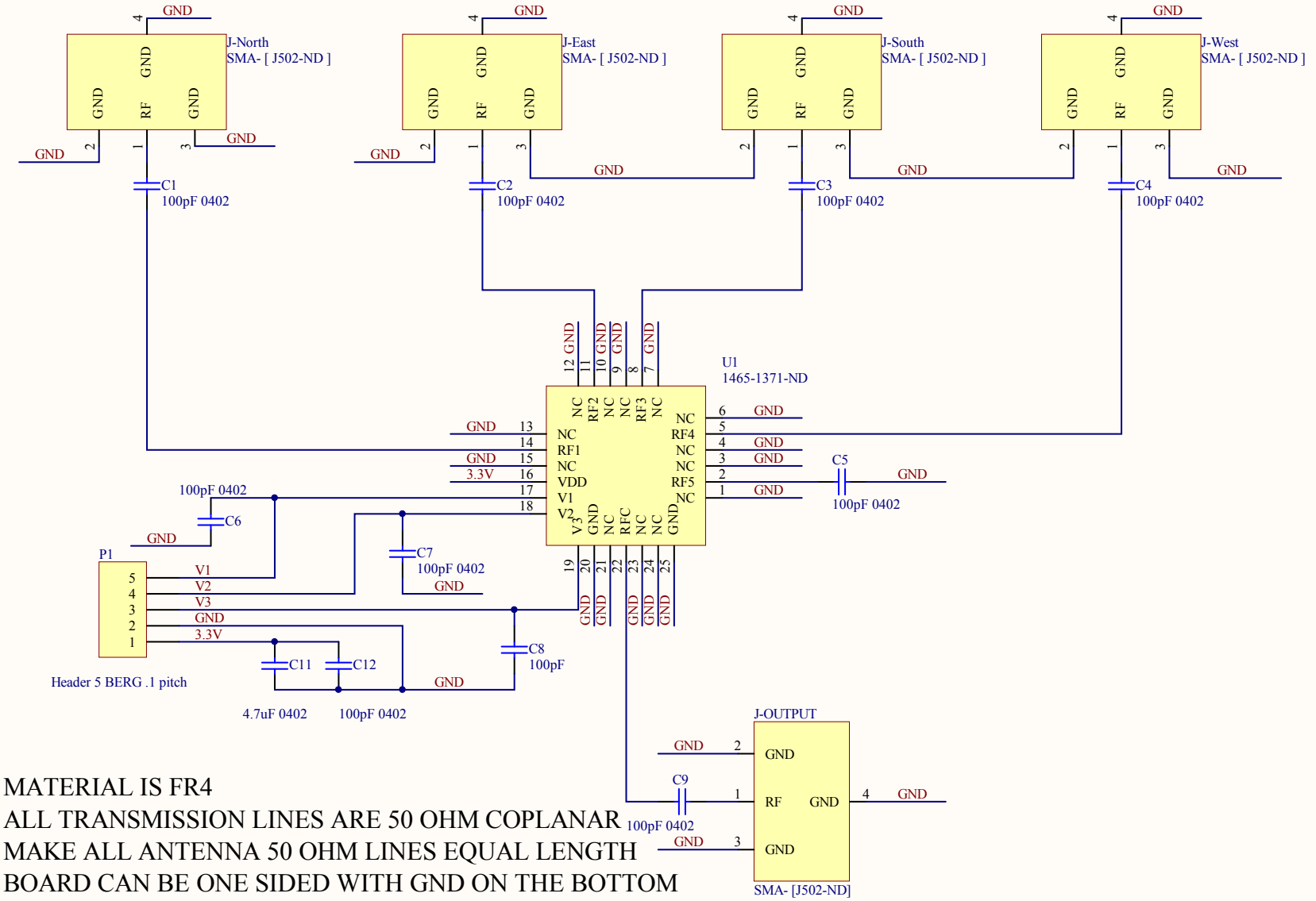

MATERIAL IS FR4
ALL TRANSMISSION LINES ARE 50 OHM COPLANAR
MAKE ALL ANTENNA 50 OHM LINES EQUAL LENGTH
BOARD CAN BE ONE SIDED WITH GND ON THE BOTTOM
PLACE MANY VIAS BETWEEN GND PLANE AND TOP GND
YOU WILL FIND THAT .032 THICK BOARD MAKES THE 50 OHM LINES EASIER
JUST USE A BLANK .032 BOARD TO MAKE THE CONNECTORS WORK

ALL PARTS ARE AVAILABLE FROM DIGIKEY AND ARE IN STOCK

Title	CADET_DF	
Size A	Number JAN 29 2016-001	Revision
Date: 1/29/2016		Sheet of
File: C:\Program Files\..\Cadet_DF.SchDoc		Drawn By: