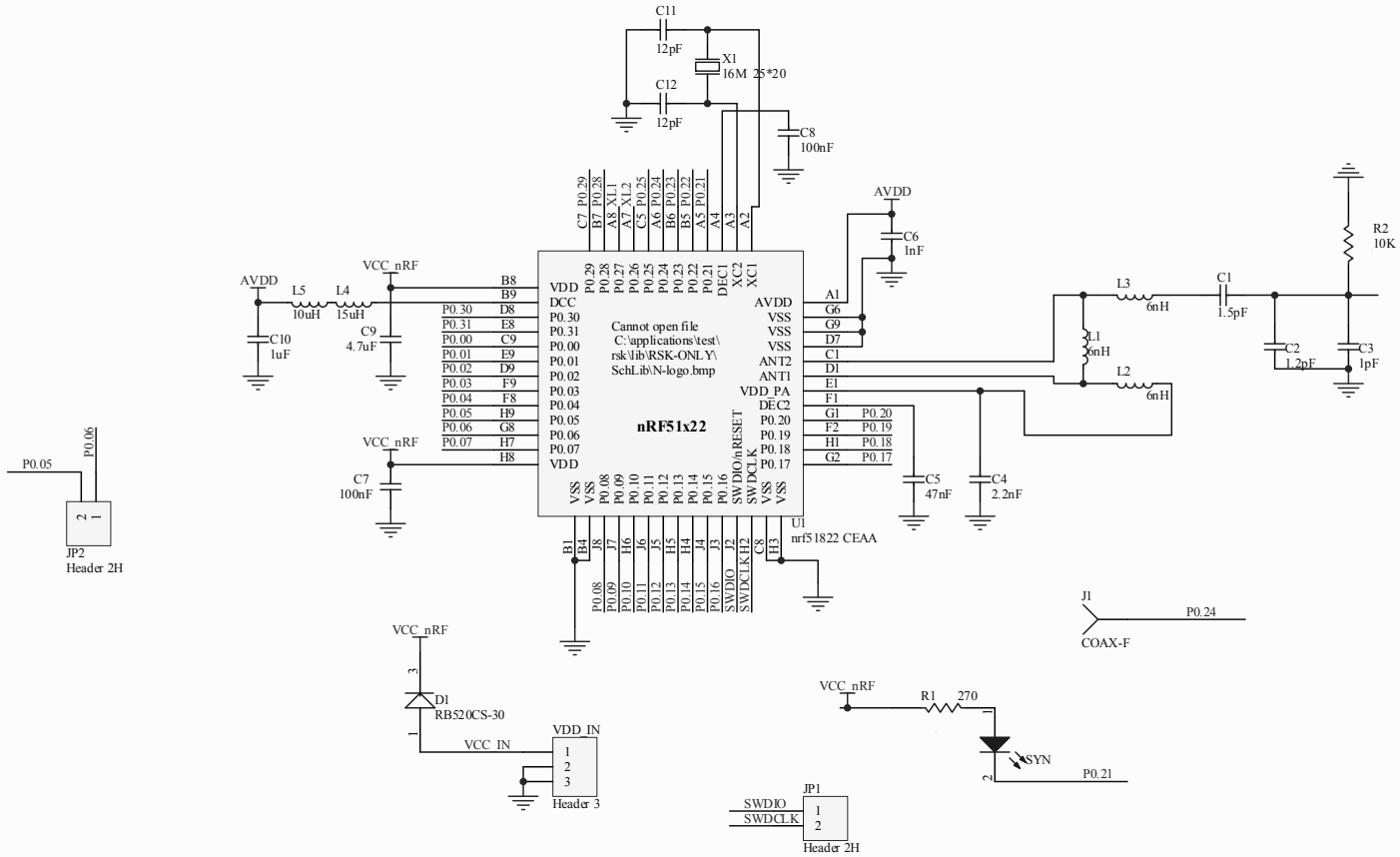

Title		
Size B	Number	Revision
Date: 2016/9/22	Sheet of	
File: F:\商务文档\pen\BLE_MODULE_0730.SCHDOC	Drawn By:	