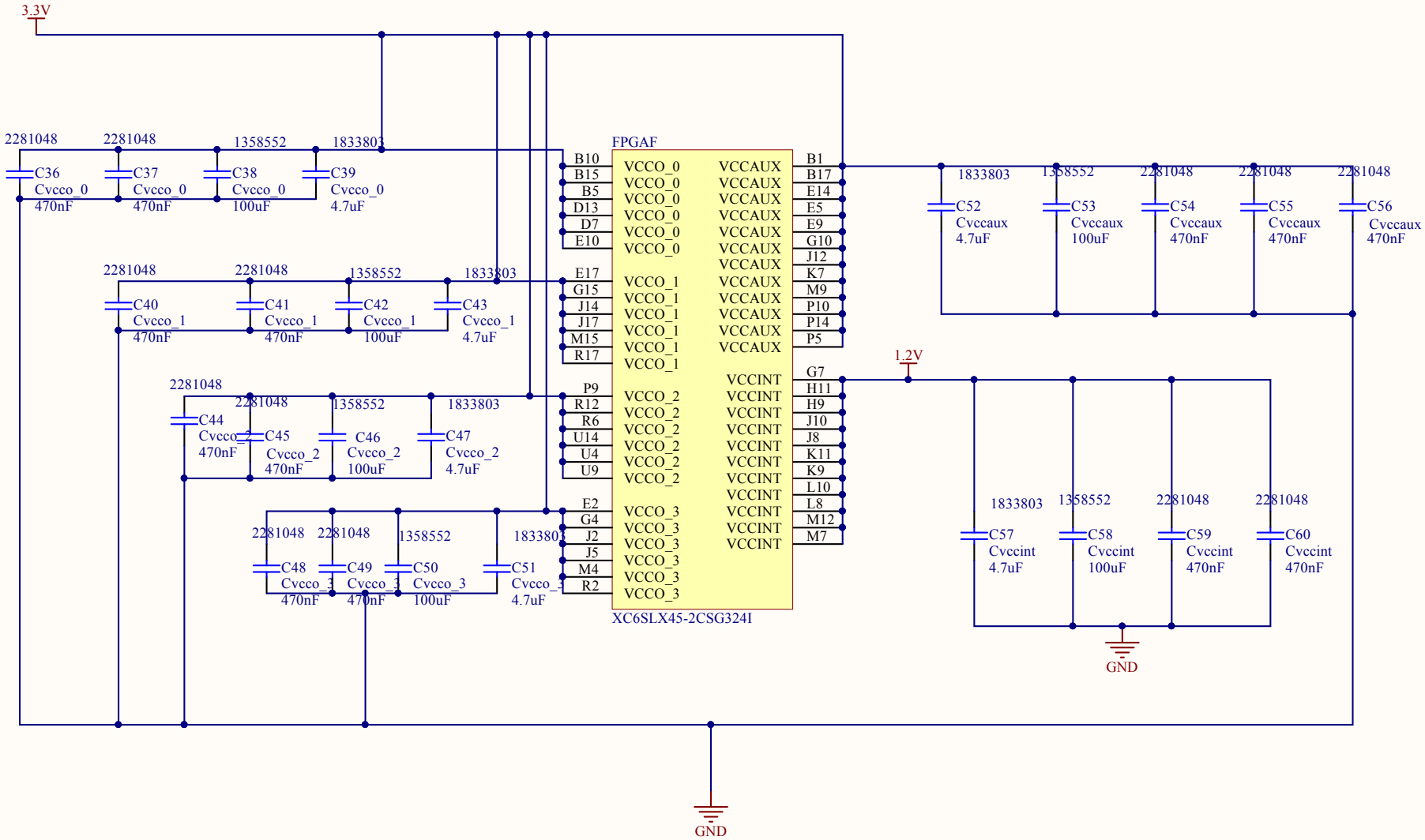

Title	FPAG power		
Size A	Number		Revision
Date:	11/25/2014	Sheet of	
File:	C:\Users\..\FPGA_VCC.SchDoc	Drawn By:	