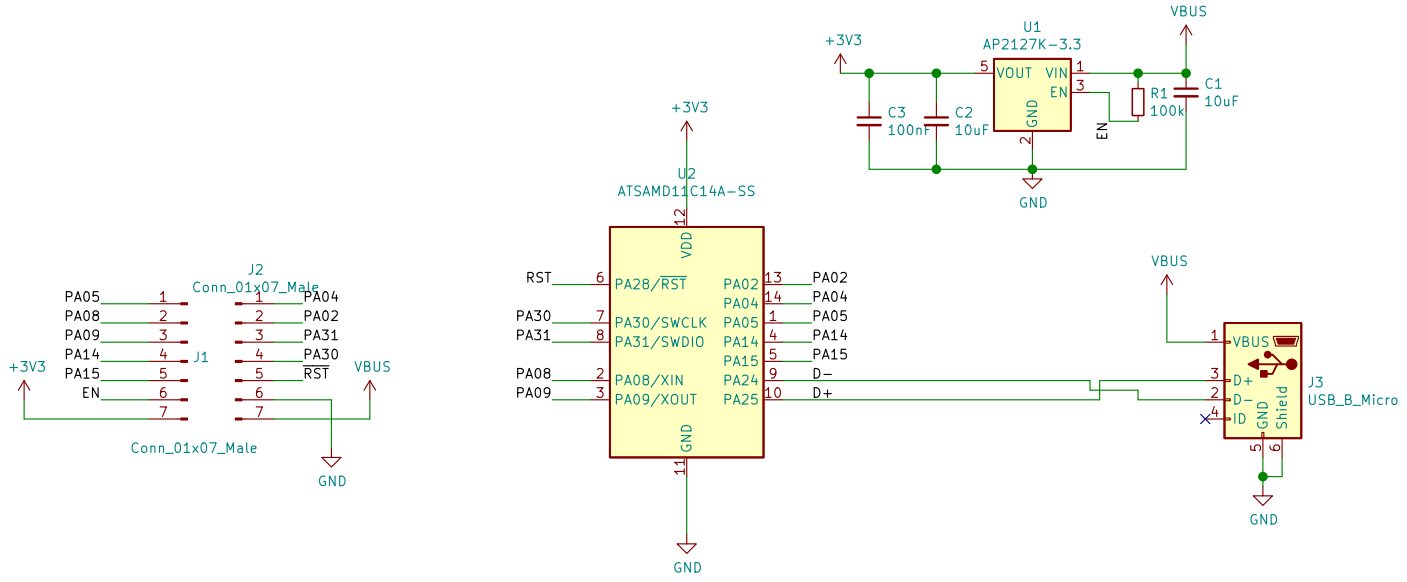

Sheet: /
File: samd11_breakout.sch

Title: SAMD11C14A Breakout Simple

Size: A4	Date: 2019-09-24	Rev: A
KiCad E.D.A. kicad 5.1.8+dfsg1-1bpo10+1		Id: 1/1