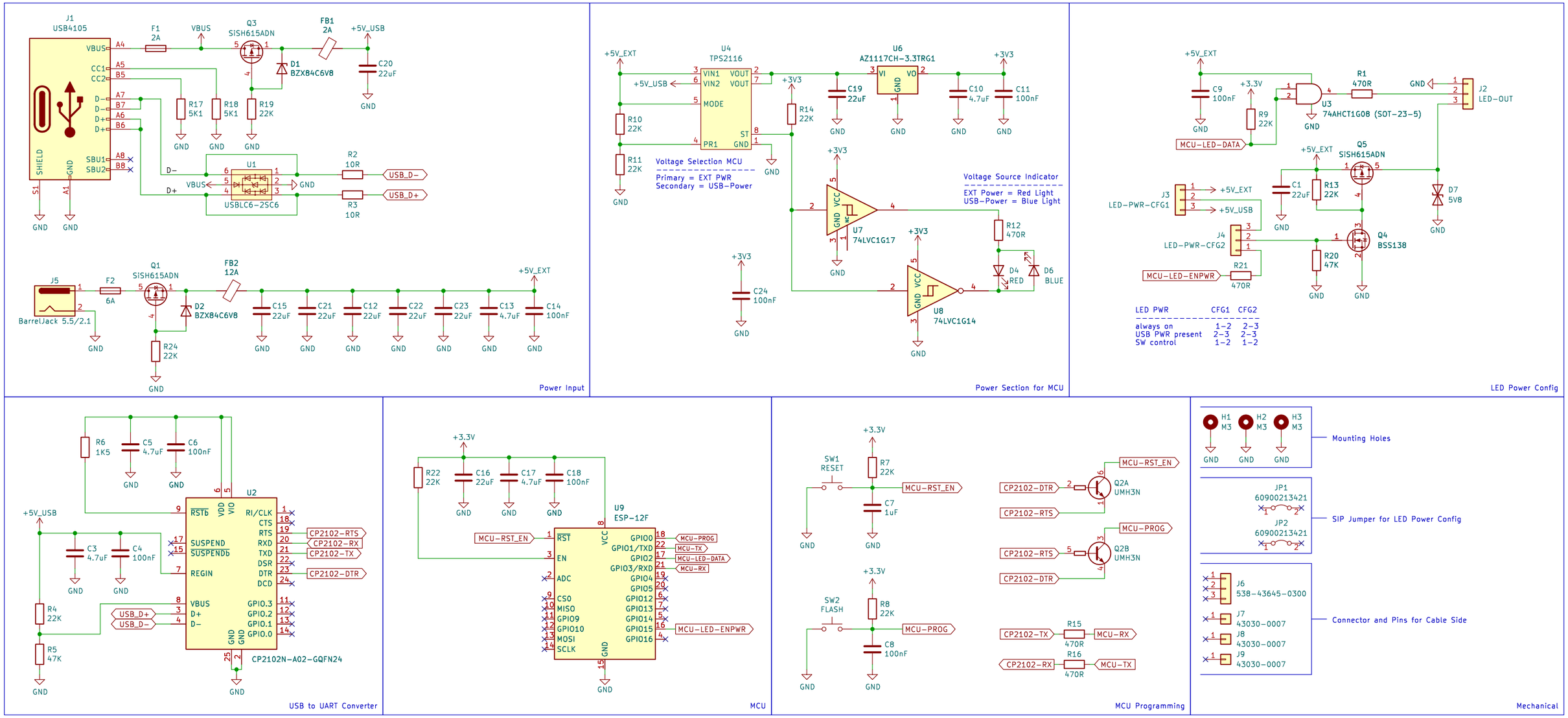

Changelog:

Rev 1.0 :
Initial Release

Rev 1.1 :
R23 (removed because not needed)
Correction of Bottom Silkscreen (LED PWR CFG)

Stackup: JLC04161H-7628

Sheet: /
File: LED-Controller.kicad_sch

Title: LED Controller (Barrel Jack Connector)

Size: A3	Date: 2024-02-05	**Rev: 1.1**
KiCad E.D.A. kicad 7.0.10		Id: 1/1