Arduino Forum (https://forum.arduino.cc/index.php) > Using Arduino (https://forum.arduino.cc/index.php#c2)

> Microcontrollers (https://forum.arduino.cc/index.php?board=67.0)

> Programming ATSAMD21 via Atmel-ICE ? (https://forum.arduino.cc/index.php?topic=425358.0)

Go Down Pages: [1]

PRINT (HTTPS://FORUM.ARDUINO.CC/INDEX.PHP?ACTION=PRINTPAGE;TOPIC=425358.0)

Topic: Programming ATSAMD21 via Atmel-ICE ? (Read 3366 times)

next=Prev#New) - Next Topic (Https://Forum.Arduino.Cc/Index.Php?Topic=425358.0;Prev next=Next#New)

**gumush (https://forum.arduino.cc/index.php?action=profile;u=10556)**

(https://forum.arduino.cc/index.php?action=profile;u=10556)

Newbie

Posts: 28

Karma: 9 [add] (https://forum.arduino.cc/index.php?action=karma;sa=applaud;uid=10556;a360228b6d=df0423b5f0ba9e85bb67fbd3faa56884)

Arduino rocks

**Programming ATSAMD21 via Atmel-ICE ? (https://forum.arduino.cc/index.php?topic=425358.msg2930583#msg2930583)**

Sep 22, 2016, 07:08 am (https://forum.arduino.cc/index.php?topic=425358.msg2930583#msg2930583)

I want to restore bootloader on my feather m0 proto that includes ATSAMD21G18A
I have Atmel-ICE Basic and Atmel Studio 7 on X64 Windows7 Machine.

Atmel SAM port has 100mil 10pin connector.

2-1
4-3
6-5
8-7
10-9

For programming we need;

1 > Vcc 3.3V > Feather proto's 3V3 pin ( second in pin line )
2> SWDIO > SWDIO on Feather's bottom side
4> SWDCLK > SWDCLK on Feather's bottom side
3,5 > GND > Feather proto's GND pin (4th in pin line)
10 > RST > Feather proto's RST pin (1st in pin line)

I powered Feather with Lipo ( tried with USB too)

Atmel-ICE basic has three lights. Green and red are on.

LE%3ACORE+PROFILE%3APUBLIC+PROFILE%3ACONTACT+OFFLINE&RESPONSE_TYPE=CODE)

On Atmel Studio > Tools > Device Programming >
Tool > Atmel-ICE
Device > ATSAMD21G18A
Interface > SWD
and clicked Apply.

When I tried to read device signature, it returned an error ("Unable to enter programming mode.") Code 4109

Target Voltage 2.6V ( From pins directly I measured its 3.2V )

(I connected SWD's pin 5 to GND it will give correct voltage 3.2-3.4 volts)

I changed SWD Clock from 2Mhz to 32Khz, but nothing changed.

Are there any suggestions to try?

---

**maurizze (https://forum.arduino.cc/index.php?action=profile;u=436204)**

(https://forum.arduino.cc/index.php?action=profile;u=436204)

Newbie
Posts: 1
Karma: 0 [add] (https://forum.arduino.cc/index.php?action=karma;sa=applaud;uid=436204;a360228b6d=df0423b5f0ba9e85bb67fbd3faa56884)

**Re: Programming ATSAMD21 via Atmel-ICE ? (https://forum.arduino.cc/index.php?topic=425358.msg2930613#msg2930613)**

Sep 22, 2016, 08:07 am (https://forum.arduino.cc/index.php?topic=425358.msg2930613#msg2930613) #1

Sounds like your voltage is dropping to low. Maybe try to add an condensator between the Pin that drops low and Ground?

gumush (https://forum.arduino.cc/index.php?action=profile;u=10556)

(https://forum.arduino.cc/index.php?action=profile;u=10556)

Newbie

Posts: 28

Karma: 9 [add] (https://forum.arduino.cc/index.php?action=karma;sa=applaud;uid=10556;a360228b6d=df0423b5f0ba9e85bb67fbd3faa56884)

Arduino rocks

Re: Programming ATSAMD21 via Atmel-ICE ? (https://forum.arduino.cc/index.php?topic=425358.msg2945309#msg2945309)

Oct 03, 2016, 10:51 am (https://forum.arduino.cc/index.php?topic=425358.msg2945309#msg2945309) Last Edit: Oct 03, 2016, 11:05 am by gumush #2

I burned firmware from Adafruits M0 with Jlink to custom M0 board with these settings.

NVMCTRL_NVM_LOCK = 0x00
NVMCTRL_PSZ = 0x03
NVMCTRL_NVMP = 0x1000
ADC_LINEARITY_0 = 0x08
ADC_LINEARITY_1 = 0x04
ADC_BIASCAL = 0x03
OSC32K_CAL = 0x3A
USB_TRANSN = 0x05
USB_TRANSP = 0x1D
USB_TRIM = 0x03
DFLL48M_COARSE_CAL = 0x1D
DFLL48M_FINE_CAL = 0x200
ROOM_TEMP_VAL_INT = 0x1D
ROOM_TEMP_VAL_DEC = 0x06
HOT_TEMP_VAL_INT = 0x54
HOT_TEMP_VAL_DEC = 0x09
ROOM_INT1V_VAL = 0x00
HOT_INT1V_VAL = 0xFE
ROOM_ADC_VAL = 0xB1A
HOT_ADC_VAL = 0xD10
NVMCTRL_BOOTPROT = 0x07
NVMCTRL_EEPROM_SIZE = 0x07
BOD33USERLEVEL = 0x07
BOD33_EN = [X]
BOD33_ACTION = 0x01
WDT_ENABLE = [ ]
WDT_ALWAYSON = [ ]
WDT_PER = 0x0B
WDT_WINDOW_0 = [X]
WDT_WINDOW_1 = 0x05
WDT_EWOFFSET = 0x0B
WDT_WEN = [ ]
BOD33_HYST = [ ]
NVMCTRL_REGION_LOCKS = 0xFFFF

OTP1_WORD_0 = 0x10000300 (unknown)
OTP4_WORD_0 = 0x40004007 (unknown)
OTP4_WORD_1 = 0x75F4AE9C (unknown)
OTP4_WORD_2 = 0xFFFFFE00 (unknown)
TEMP_LOG_WORD_0 = 0x95461D (unknown)
TEMP_LOG_WORD_1 = 0xD10B1AFE (unknown)
USER_WORD_0 = 0xD8E0C7FF (valid)
USER_WORD_1 = 0xFFFFFC5D (valid)

Device cannot be known. M0 drivers already loaded. When powered it look like

bootloader mode or blink, i cannot decide with one ?

L E % 3 A C O R E + P R O F I L E % 3 A P U B L I C + P R O F I L E % 3 A C O N T A C T + O F F L I N E & R E S P O N S E _ T Y P E = C O D E )

Any ideas ? Could anyone confirm the fuses right.

After restoring bootloader ( https://learn.adafruit.com/system/assets/assets/000/031/337/original/featherm0bootloader_160305.zip?1458155274 )

https://www.youtube.com/watch?v=KnjucqKH6Us

Is bootloader has default blink program ? or it's for the bootloader mode ?

Windows Device Manager shows device as Unknown.

---

**gumush (https://forum.arduino.cc/index.php?action=profile;u=10556)**

(https://forum.arduino.cc/index.php?action=profile;u=10556)

Newbie

Posts: 28

Karma: 9 [add] (https://forum.arduino.cc/index.php?action=karma;sa=applaud;uid=10556;a360228b6d=df0423b5f0ba9e85bb67fbd3faa56884)

Arduino rocks

**Re: Programming ATSAMD21 via Atmel-ICE ? (https://forum.arduino.cc/index.php?topic=425358.msg2948299#msg2948299)**

Oct 05, 2016, 11:06 am (https://forum.arduino.cc/index.php?topic=425358.msg2948299#msg2948299) #3

I installed these drivers, but nothing changed.

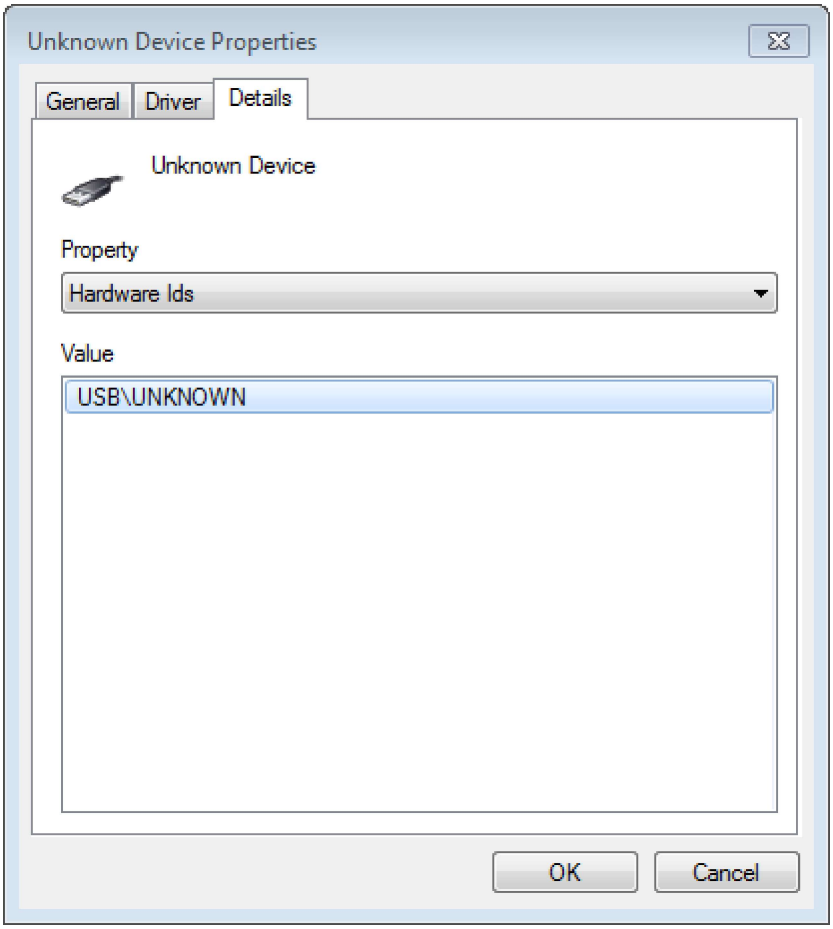

LE%3ACORE+PROFILE%3APUBLIC+PROFILE%3ACONTACT+OFFLINE&RESPONSE_TYPE=CODE)

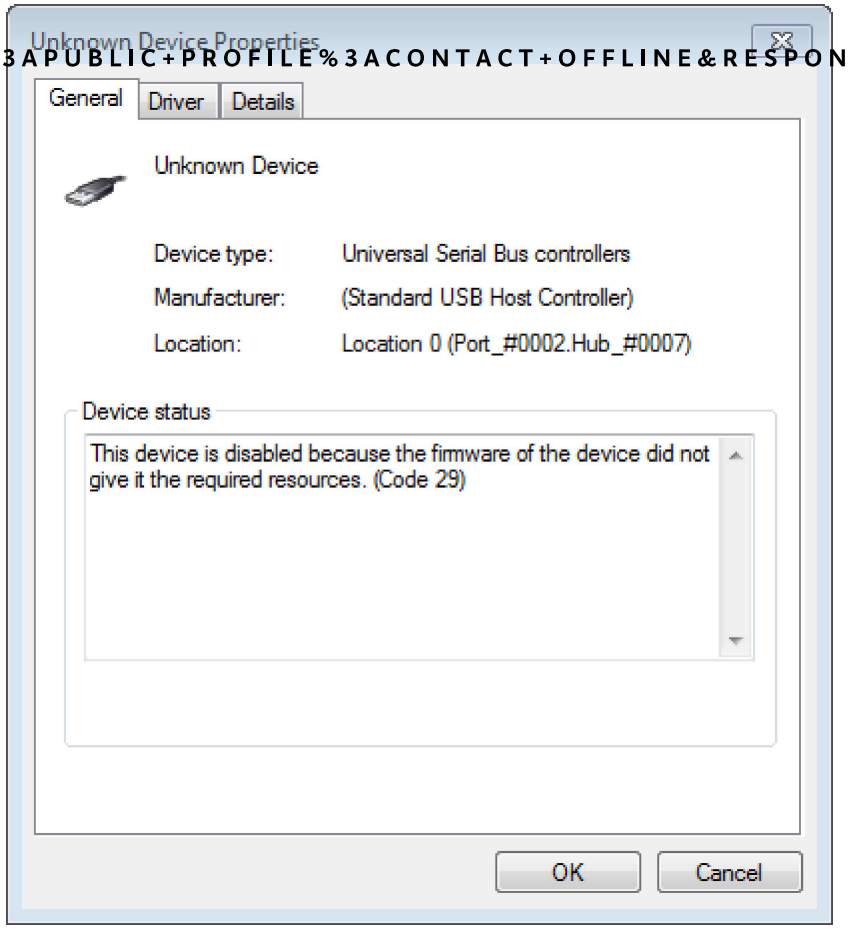


Schematic that I used for MC and USB connections are.

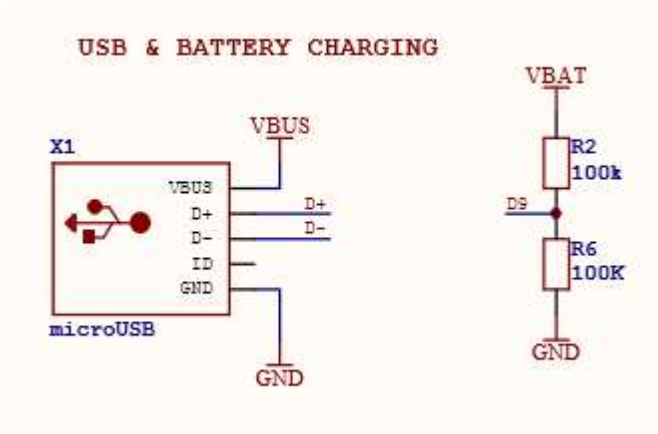

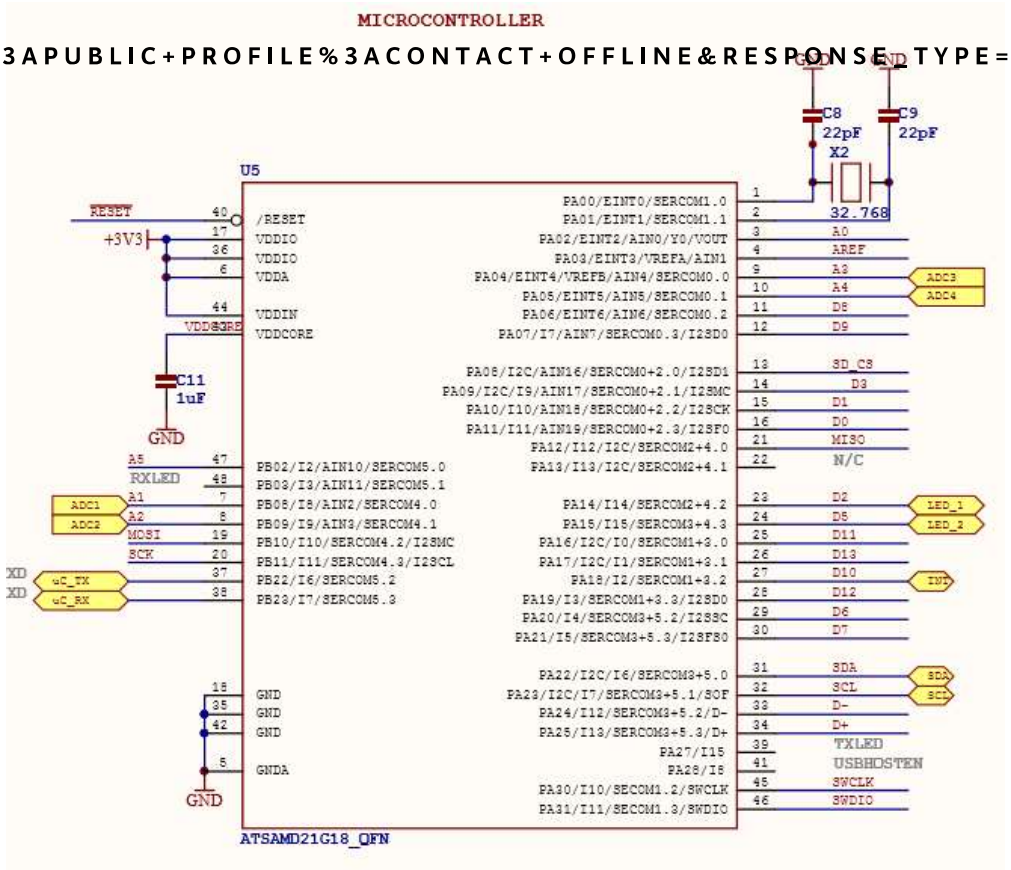


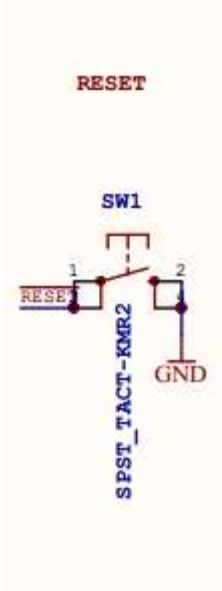


I have ten units. I tried another one to burn firmware. It's successfully flashed and verify the firmware, but it's still stuck in bootloader mode.

I use two clicks the button but doesn't work.

---

AwakingDragon (https://forum.arduino.cc/index.php?action=profile;u=560531)

(https://forum.arduino.c

Re: Programming ATSAMD21 via Atmel-ICE ? (https://forum.arduino.cc/index.php?topic=425358.msg2959988#msg2959988)

Oct 14, 2016, 02:58 am (https://forum.arduino.cc/index.php?topic=425358.msg2959988#msg2959988) #4

I also tried to do the same thing you are doing here, but instead I cam up with a different error:

"Failed to write segment at 0x0 to target for memorytype

Severity: ERROR
ComponentId: 20100

c/index.php?
action=profile;u=560531)

Newbie

Posts: 6

Karma: 0 [add]
(https://forum.arduino.cc/index.php?action=karma;sa=applaud;uid=560531;a360228b6d=df0423b5f0ba9e85bb67fbd3faa56884)

LE%3ACORE+PROFILE%3APUBLIC+PROFILE%3ACONTACT+OFFLINE&RESPONSE_TYPE=CODE)

StatusCode: 131103
ModuleName: TCF command: Modules.write toMemory failed!

Failed to write segment at 0x0 to target for memorytype"

Not sure if anyone has any thoughts. I followed similar instructions as to what was shown in the Adafruit tutorial.

---

**AwakingDragon (https://forum.arduino.cc/index.php?action=profile;u=560531)**

(https://forum.arduino.cc/index.php?action=profile;u=560531)

Newbie

Posts: 6

Karma: 0 [add]
(https://forum.arduino.cc/index.php?action=karma;sa=applaud;uid=560531;a360228b6d=df0423b5f0ba9e85bb67fbd3faa56884)

**Re: Programming ATSAMD21 via Atmel-ICE ? (https://forum.arduino.cc/index.php?topic=425358.msg2969988#msg2969988)**

Oct 21, 2016, 05:05 pm (https://forum.arduino.cc/index.php?topic=425358.msg2969988#msg2969988) #5

After much experimentation, I think a lot of the errors I found that uploading the bootloader and getting Windows to reliably detect the device requires proper placement of decoupling capacitors. I followed the decoupling capacitor guidelines carefully in the SAMD21 datasheet, and this solved my problem.

I also once encountered the "Unable to enter programming mode" problem when I accidently swapped the SWDIO and SWCLK pin connections with the Atmel ICE programmer.

---

**twelfthman (https://forum.arduino.cc/index.php?action=profile;u=726479)**

(https://forum.arduino.cc/index.php?action=profile;u=726479)

**Re: Programming ATSAMD21 via Atmel-ICE ? (https://forum.arduino.cc/index.php?topic=425358.msg3219996#msg3219996)**

Apr 14, 2017, 10:29 am (https://forum.arduino.cc/index.php?topic=425358.msg3219996#msg3219996) #6

Hey @AwakingDragon,
Could you please provide more information on how you got it to work? I am getting the same error when I try to program "Failed to write segment at 0x0 to target for memorytype base" and I am getting this error when I try to verify "Verifying Flash...Failed! address=0x0000 expected=0x50 actual=0xff". Could you please direct me to the page in SAMD21 datasheet where it gives information on where to place the decoupling capacitors? I have been going through the datasheet but have not been able to find anything. Sorry, i am beginner at this. Thank you.

Newbie
LE%3ACORE+PROFILE%3APUBLIC+PROFILE%3ACONTACT+OFFLINE&RESPONSE_TYPE=CODE)
Posts: 1
Karma: 0 [add] (https://forum.arduino.cc/index.php?action=karma;sa=applaud;uid=726479;a360228b6d=df0423b5f0ba9e85bb67fbd3faa56884)

AwakingDragon (https://forum.arduino.cc/index.php?action=profile;u=560531)

(https://forum.arduino.cc/index.php?action=profile;u=560531)

Newbie
Posts: 6
Karma: 0 [add] (https://forum.arduino.cc/index.php?action=karma;sa=applaud;uid=560531;a360228b6d=df0423b5f0ba9e85bb67fbd3faa56884)

Re: Programming ATSAMD21 via Atmel-ICE ? (https://forum.arduino.cc/index.php?topic=425358.msg3224774#msg3224774)
Apr 18, 2017, 03:33 am (https://forum.arduino.cc/index.php?topic=425358.msg3224774#msg3224774) #7

The datasheet (http://www.atmel.com/Images/Atmel-42181-SAM-D21_Datasheet.pdf), provides some rudimentary schematic for the capacitors in Figure 8.1.

Unfortunately, the datasheet is a bit vague about the actual value of the capacitors, but suggestions are provided on Table 37-17. You can also emulate the setup which was used in the design of the Adafruit Feather M0, schematic found here: https://learn.adafruit.com/assets/28801

Hope this helps.

Go Up Pages: [1]

PRINT (HTTPS://FORUM.ARDUINO.CC/INDEX.PHP?ACTION=PRINTPAGE;TOPIC=425358.0)

Jump to:
=> Microcontrollers Go

LE%3ACORE+PROFILE%3APUBLIC+PROFILE%3ACONTACT+OFFLINE&RESPONSE_TYPE=CODE)

NEWSLETTER

ENTER YOUR EMAIL TO SIGN UP

SUBSCRIBE

Terms Of Service (//www.arduino.cc/en/Main/TermsOfService)

Privacy Policy (//www.arduino.cc/en/Main/PrivacyPolicy)

Change Cookie Preferences

Contact Us (//www.arduino.cc/en/Main/ContactUs)

About Us (//www.arduino.cc/en/Main/AboutUs)

Distributors (//store.arduino.cc/distributors)

Careers (//www.arduino.cc/Careers)

Security (//www.arduino.cc/en/Main/Security)

© 2018 Arduino (//www.arduino.cc/en/Main/CopyrightNotice)

(https://twitter.com/arduino_cc) (https://www.facebook.com/officialarduino/) (https://www.instagram.com/arduino/) (https://www.youtube.com/channel/UCkqqzqqqqqqqqqqqqqqqqqq) (https://www.flickr.com/photos/arduino/) (https://www.linkedin.com/company/arduino-cc) (https://www.tumblr.com/search/arduinoteam)