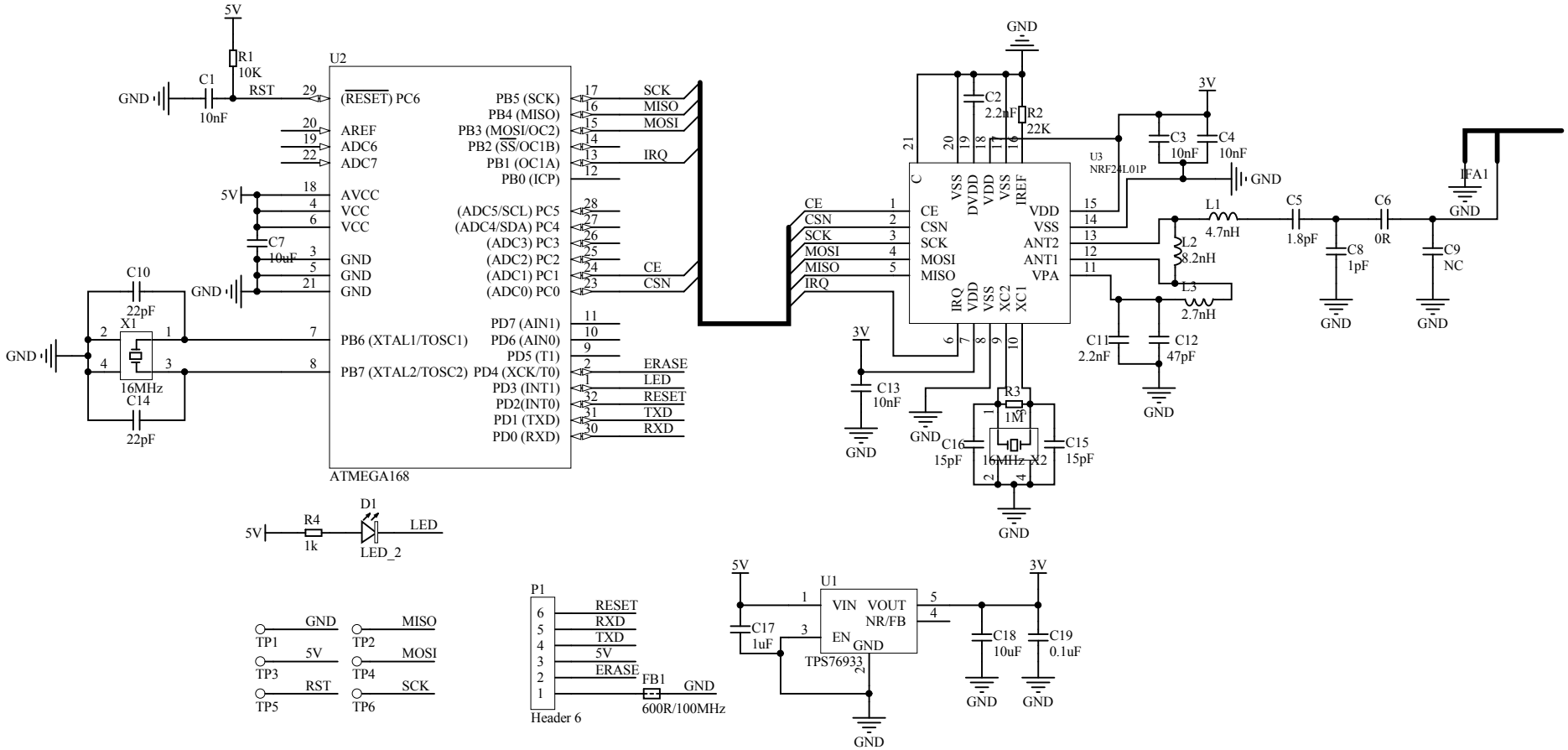

Title		
Size A4	Number	Revision
Date: 2013-1-17	Sheet of	
File: E:\Subject\WBURN\pcb\slave\slave.SchDoc	Drawn By:	