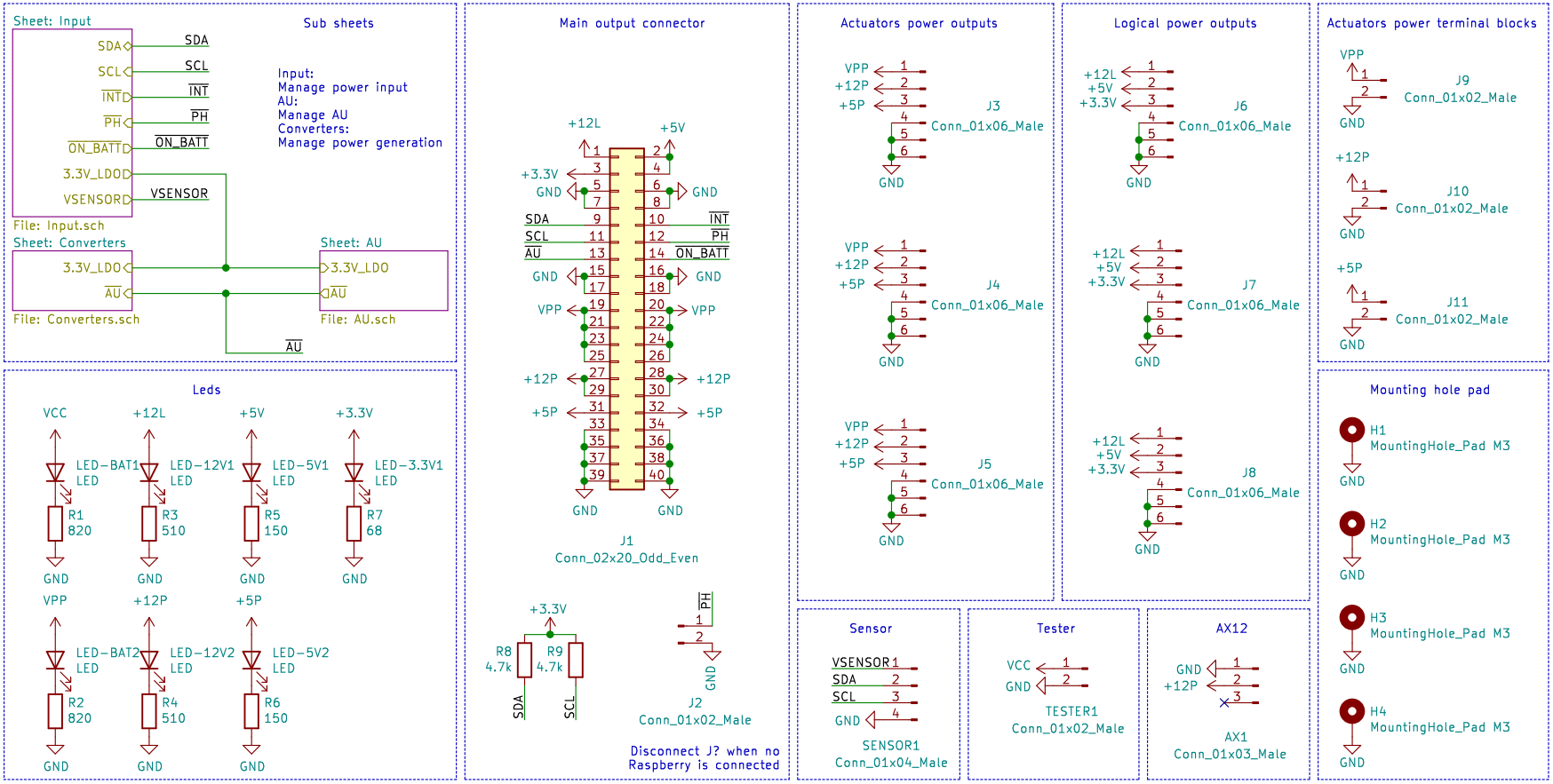

TODO:
Decoupler VCC ?
Plus de décloupage ?
Mettre PH à GND avec L_SW ?
Enlever les jumper de input
Pullup PH, INT, ON_BAU

Evolutek<< & Coffee Machine

Sheet: /
File: Carte Alim.sch

Title: Carte Alim

Size: A4	Date: 2021-08-15	**Rev: V4.1**
KiCad E.D.A. kicad (5.1.8)-1		Id: 1/4

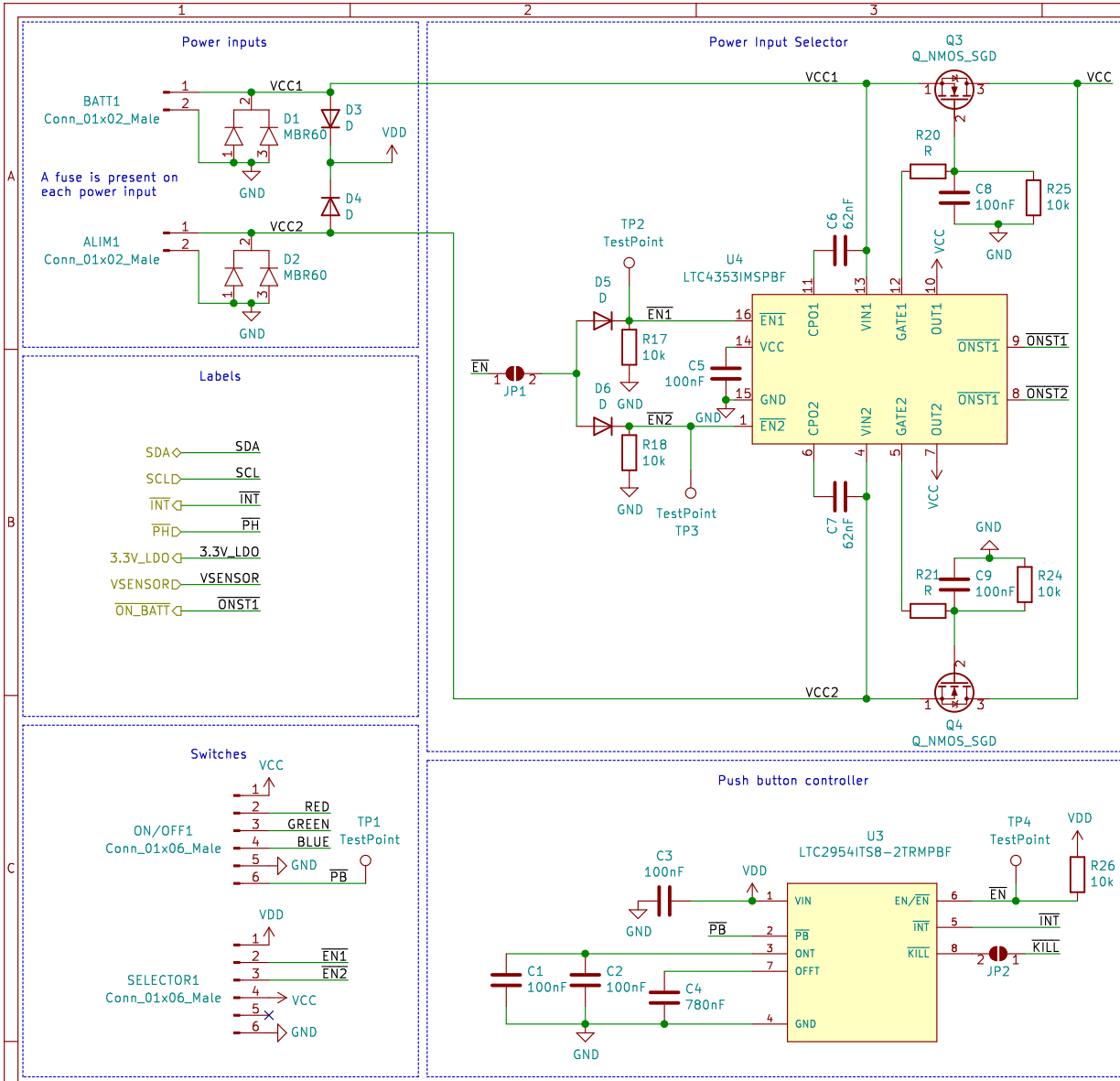
Power inputs
BATT1
Conn_01x02_Male
VCC1
D1
MBR60
D3
D
VDD
A fuse is present on
each power input
GND
D4
D
ALIM1
Conn_01x02_Male
VCC2
D2
MBR60
Power Input Selector
Q3
Q_NMOS_SGD
VCC1
VCC
R20
R
C8
100nF
R25
10k
C6
62nF
TP2
TestPoint
U4
LTC4353IMSPBF
D5
D
EN1
R17
10k
C5
100nF
EN
JP1
D6
D
EN2
R18
10k
TestPoint
TP3
EN1
VCC
GND
EN2
CPO1
VIN1
GATE1
OUT1
ONST1
ONST1
CPO2
VIN2
GATE2
OUT2
ONST1
ONST2
C7
62nF
R21
R
C9
100nF
R24
10k
Q4
Q_NMOS_SGD
VCC2
Labels
SDA
SCL
INT
PH
3.3V_LDO
VSENSOR
ON_BATT
ONST1
Switches
ON/OFF1
Conn_01x06_Male
RED
GREEN
BLUE
TP1
TestPoint
PB
SELECTOR1
Conn_01x06_Male
EN1
EN2
Push button controller
U3
LTC2954ITS8-2TRMPBF
C3
100nF
VIN
PB
ONT
OFFT
EN/EN
INT
KILL
TP4
TestPoint
R26
10k
JP2
C1
100nF
C2
100nF
C4
780nF
Current/Voltage measure
RSHUNT1
0.002
U8
INA219AxD
IN+
IN−
VS
GND
SDA
SCL
A1
A0
D9
D
D10
D
C14
100nF
JP4
JP5
Leds
GREEN
R13
330
U1
74AUP1G02
R10
10k
R11
10k
R12
10k
Q1
Q_NMOS_GSD
BLUE
R19
330
U2
74AUP1G02
R14
10k
R15
10k
R16
10k
Q2
Q_NMOS_GSD
Green and Blue
led truth table
/PH /ONST O
0 0 1
0 1 0
1 0 0
1 1 0
D7
D
D8
D
R22
1k
R23
330
Q5
Q_NMOS_GSD
Red led
truth table
/PH /Bl O
0 0 0
0 1 0
1 0 0
1 1 1
3.3V Regulation
U6
NCP718xSN330
IN
OUT
EN
GND
JP3
C10
1uF
C16
1uF
J12
Conn_01x03_Male
Signal delayer
C13
100nF
R27
10k
R28
10k
TP6
TestPoint
TP5
TestPoint
SENSE
MR
CT
VDD
RESET
C12
780nF
U5
TPS3808DBV
Q6
Q_NMOS_GSD
Blinking signal
generation
U7
NE555D
C15
100nF
TR
CV
R
VCC
Q
DIS
THR
C11
100nF
R29
78.7k
R30
78.7k
C17
4.7uF
RESET may need
10nF (to test)
TODO Reset ?
This design is used to:
– Controlling the power input of the robot
with a push button.
– Select the power source between a battery
or an external alimentation.
The power sources are protected with:
– A fuse (20–30A)
– A diode to prevent polarization inversion.
The power source selection system use a LTC4353.
By default, the LTC4353 is in ideal diode mode,
so it will choose automatically the power source
by comparing the voltage.
We can override the ideal diode mode using
a 3 state switch to select manually the power source.
The push button control system uses a LTC2950.
To turn on the robot, press the push button 2s.
If the Raspberry hasn't turned on in 5s,
the robot will turn off.
To turn off the robot, there are 2 ways:
– Press the push button less than 5s.
The Raspberry Pi will confirm the shutdown
and the robot will turn off after 5s.
– Press the push button more than 5s.
It will turn off the robot after the 5s.
The selected push button has 3 leds
(Red, Green and Blue).
– It will blink red when the system
is turning on and off.
– It will be green when the selected power source
is the battery.
– It will be blue when the selected power source
is the external alimentation.
An INA219 is used to measure
the output current/voltage.
List of ICs:
– LTC2950: push button controller.
– LTC4353: power source selector.
– NCP718: 3.3V regulator.
– TSP3808: current supervisor used
for delaying shutdown delay.
– NE55: precision timer used
for blinking the red led.
Important signals:
– VCC1/VCC2: Input power (14–18V).
– VDD: Logical power (14–18V).
– VCC: Output power (14–18V).
– SDA/SLC: INA219 I2C (3.3V).
– INT:
output signal of the LT2950 when
the push button was pressed.
– PH:
output signal of the Raspberry if
we need to hold the power.
– KILL:
delayed signal of PH.
– EN:
enable sgnal of the system
– Blink:
blinking signal for the red led.
Evolutek<< & Coffee Machine
Sheet: /Input/
File: Input.sch
Title: Carte Alim
Size: A4
Date: 2021-08-15
Rev: V4.1
KiCad E.D.A. kicad (5.1.8)-1
Id: 2/4

AU connectors

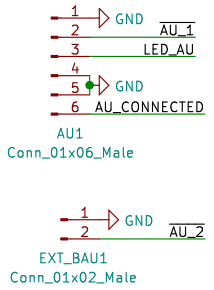

AUs need to be in NC

AU logical circuit

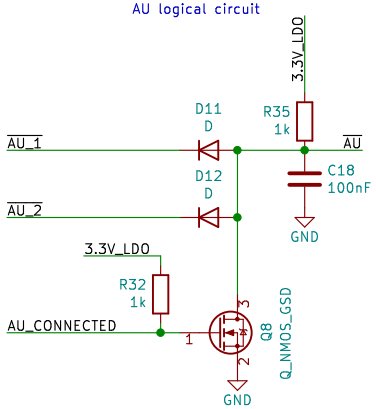

AU truth table

/AU1	/AU2	/AU_CONNECTED	/AU
0	0	0	0
0	0	1	0
0	1	0	0
0	1	1	0
1	0	0	0
1	0	1	0
1	1	0	1
1	1	1	0

Batt power commutation circuit

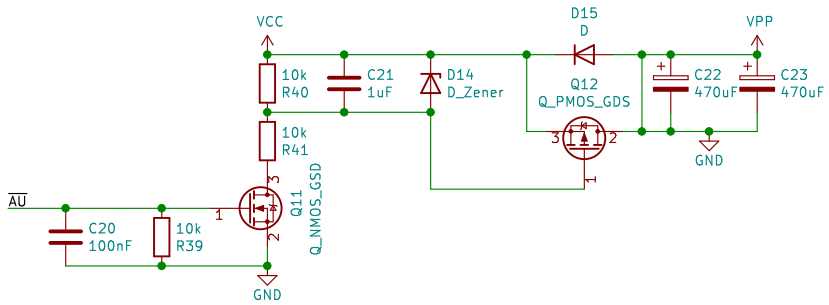

Labels

AU led control circuit

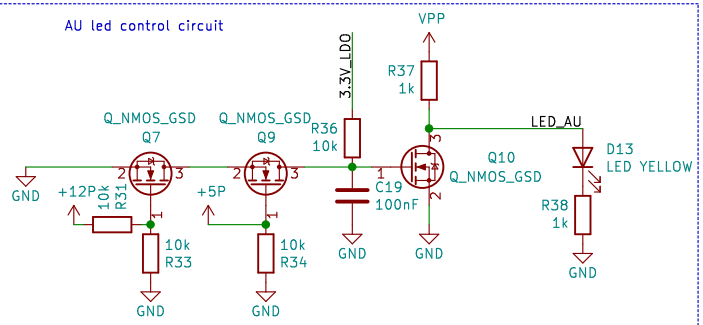

Signals descriptions

- VCC:
Power input 9-36V (batterie or external power source)
- VPP:
Power from VCC for actuators
- AU:
AU signal; when AU is pressed, the signal is put to GND
- AU1:
Signal for robot AU
- AU2:
Signal from extern AU
- LED_AU:
AU led power from VCC
- AU_CONNECTED:
Signal to tell if AU is connected to the board (at GND)
- 3.3V_LDO:
3.3V comming from a LDO used for the control of the board
- 12P:
12V power for actuators
- 5P:
5V power for actuators

Evolutek<< & Coffee Machine

Sheet: /AU/
File: AU.sch

Title: Carte Alim

Size: A4	Date: 2021-08-15	**Rev: V4.1**
KiCad E.D.A. kicad (5.1.8)-1		Id: 3/4

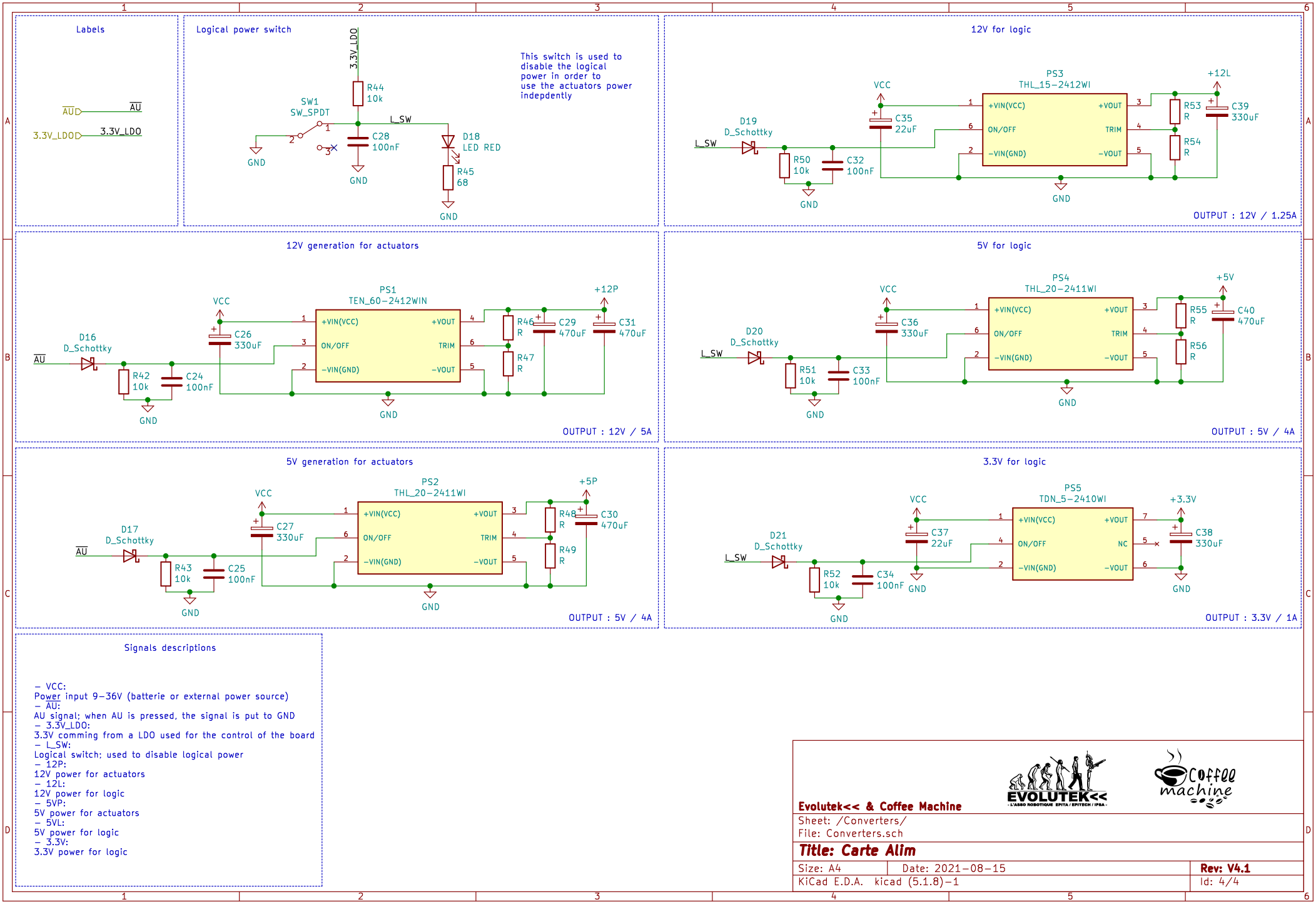
Labels
AU
3.3V_LDO
Logical power switch
3.3V_LDO
R44
10k
SW1
SW_SPDT
L_SW
C28
100nF
D18
LED RED
R45
68
GND
This switch is used to disable the logical power in order to use the actuators power indepdently
12V for logic
PS3
THL_15-2412WI
VCC
+12L
D19
D_Schottky
C35
22uF
R50
10k
C32
100nF
+VIN(VCC)
ON/OFF
-VIN(GND)
+VOUT
TRIM
-VOUT
R53
R
R54
R
C39
330uF
OUTPUT : 12V / 1.25A
12V generation for actuators
PS1
TEN_60-2412WIN
+12P
D16
D_Schottky
R42
10k
C24
100nF
C26
330uF
R46
R
R47
R
C29
470uF
C31
470uF
OUTPUT : 12V / 5A
5V for logic
PS4
THL_20-2411WI
+5V
D20
D_Schottky
R51
10k
C33
100nF
C36
330uF
R55
R
R56
R
C40
470uF
OUTPUT : 5V / 4A
5V generation for actuators
PS2
THL_20-2411WI
+5P
D17
D_Schottky
R43
10k
C25
100nF
C27
330uF
R48
R
R49
R
C30
470uF
OUTPUT : 5V / 4A
3.3V for logic
PS5
TDN_5-2410WI
+3.3V
D21
D_Schottky
R52
10k
C34
100nF
C37
22uF
NC
C38
330uF
OUTPUT : 3.3V / 1A
Signals descriptions
- VCC:
Power input 9-36V (batterie or external power source)
- AU:
AU signal; when AU is pressed, the signal is put to GND
- 3.3V_LDO:
3.3V comming from a LDO used for the control of the board
- L_SW:
Logical switch; used to disable logical power
- 12P:
12V power for actuators
- 12L:
12V power for logic
- 5VP:
5V power for actuators
- 5VL:
5V power for logic
- 3.3V:
3.3V power for logic
Evolutek<< & Coffee Machine
Sheet: /Converters/
File: Converters.sch
Title: Carte Alim
Size: A4
Date: 2021-08-15
Rev: V4.1
KiCad E.D.A. kicad (5.1.8)-1
Id: 4/4