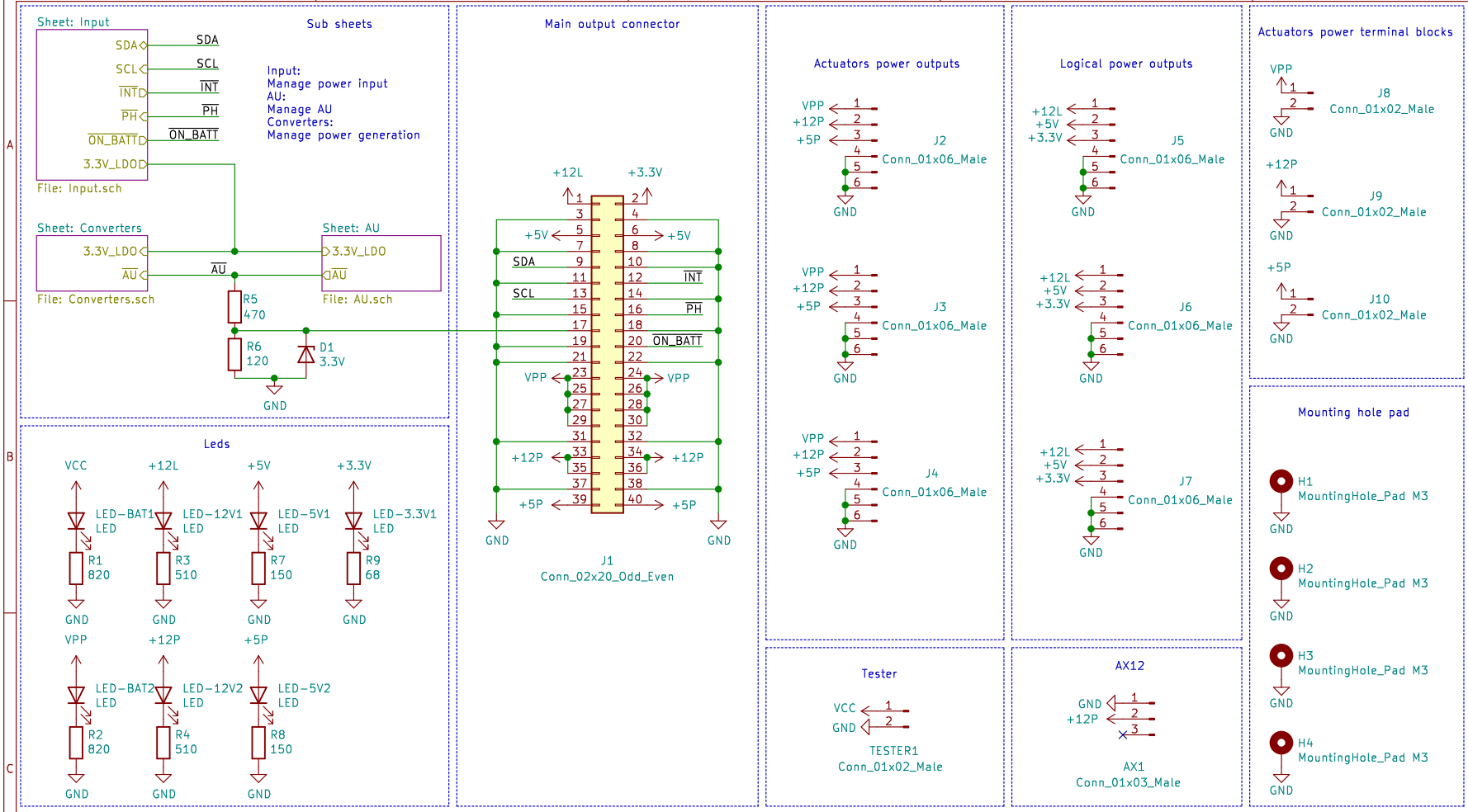

Evolutek<< & Coffee Machine

Sheet: /

File: Carte Alim.sch

Title: Carte d'alimentation

Size: A4	Date: 2022-03-13	**Rev: V4.1**
KiCad E.D.A. kicad (5.1.10)-1		Id: 1/4

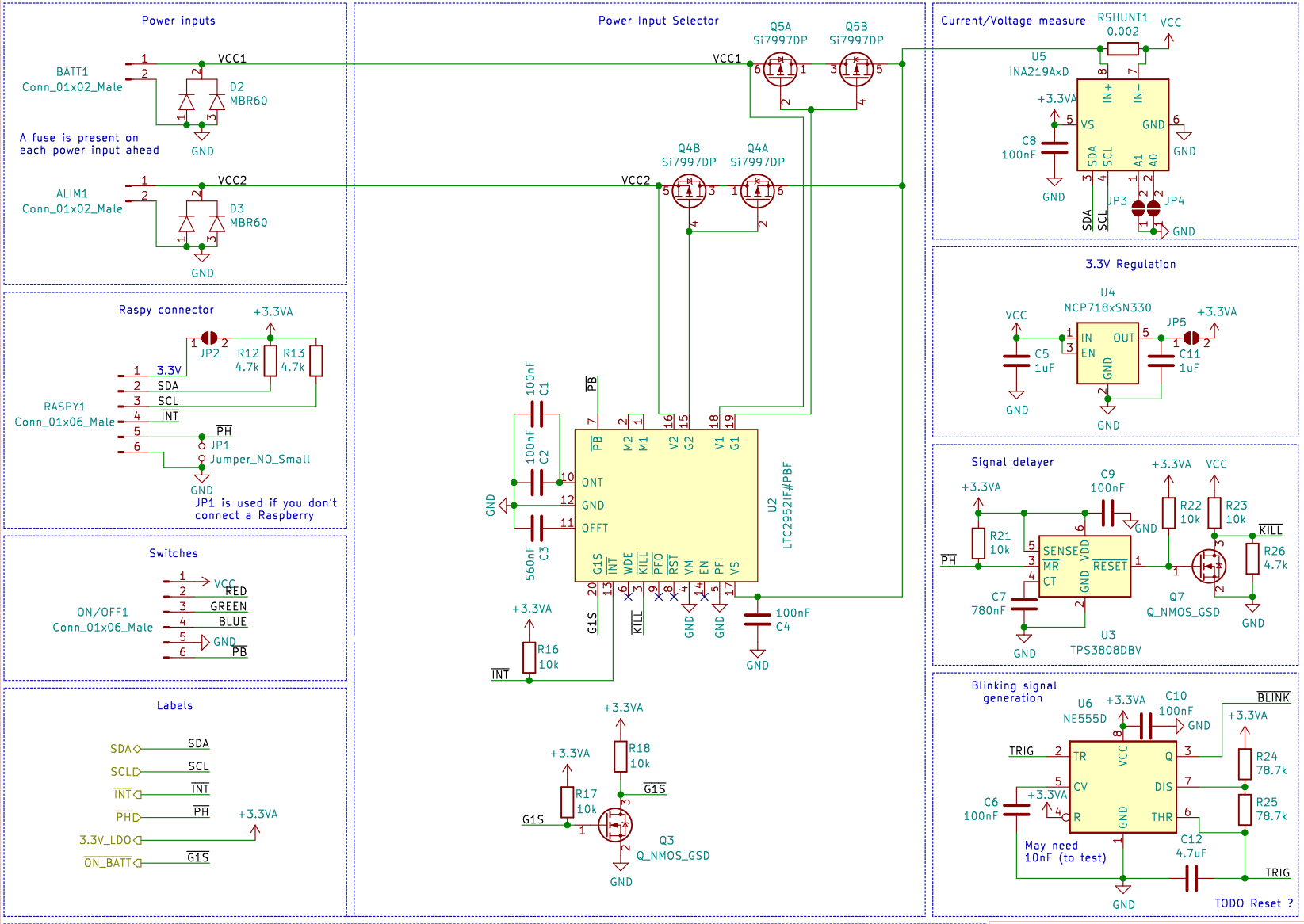

This board was designed for:
- Controlling the power input of the robot with a push button.
- Select the power source between a battery or an external alimentation.

The power sources are protected with:
- A fuse (20–30A)
- A diode to prevent polarization inversion.

The power source selection system use a LTC2952.

By default, the LTC2952 is in ideal diode mode, so it will choose automatically the power source by comparing the voltage.

We can override the ideal diode mode using a 3 state switch to select manually the power source.

The push button is also managed by the LTC2952.

To turn on the robot, press the push button 2s. If the Raspberry hasn't turned on in 5s, the robot will turn off.

To turn off the robot, there are 2 ways:
- Press the push button less than 5s. The Raspberry Pi will confirm the shutdown and the robot will turn off after 5s.

- Press the push button more than 5s. It will turn off the robot after the 5s.

The selected push button has 3 leds (Red, Green and Blue).
- It will blink red when the system is turning on and off.
- It will be green when the selected power source is the battery.
- It will be blue when the selected power source is the external alimentation.

An INA219 is used to measure the output current/voltage.

List of ICs:
- LTC2952: : power source selector and push button controller.
- NCP718: 3.3V regulator.
- TSP3808: current supervisor used for delaying shutdown delay.
- NE55: precision timer used for blinking the red led.

Important signals:
- VCC1/VCC2: Input power (14–18V).
- VCC: Output power (14–18V).
- SDA/SLC: INA219 I2C (3.3V).
- INT: output signal of the LT2952 when the push button was pressed.
- PH: output signal of the Raspberry if we need to hold the power.
- KILL: delayed signal of PH.
- Blink: blinking signal for the red led.

Evolutek<< & Coffee Machine

Sheet: /Input/
File: Input.sch

Title: Carte d'alimentation

Size: A4	Date: 2022-03-13	Rev: V4.1
KiCad E.D.A. kicad (5.1.10)-1		Id: 2/4

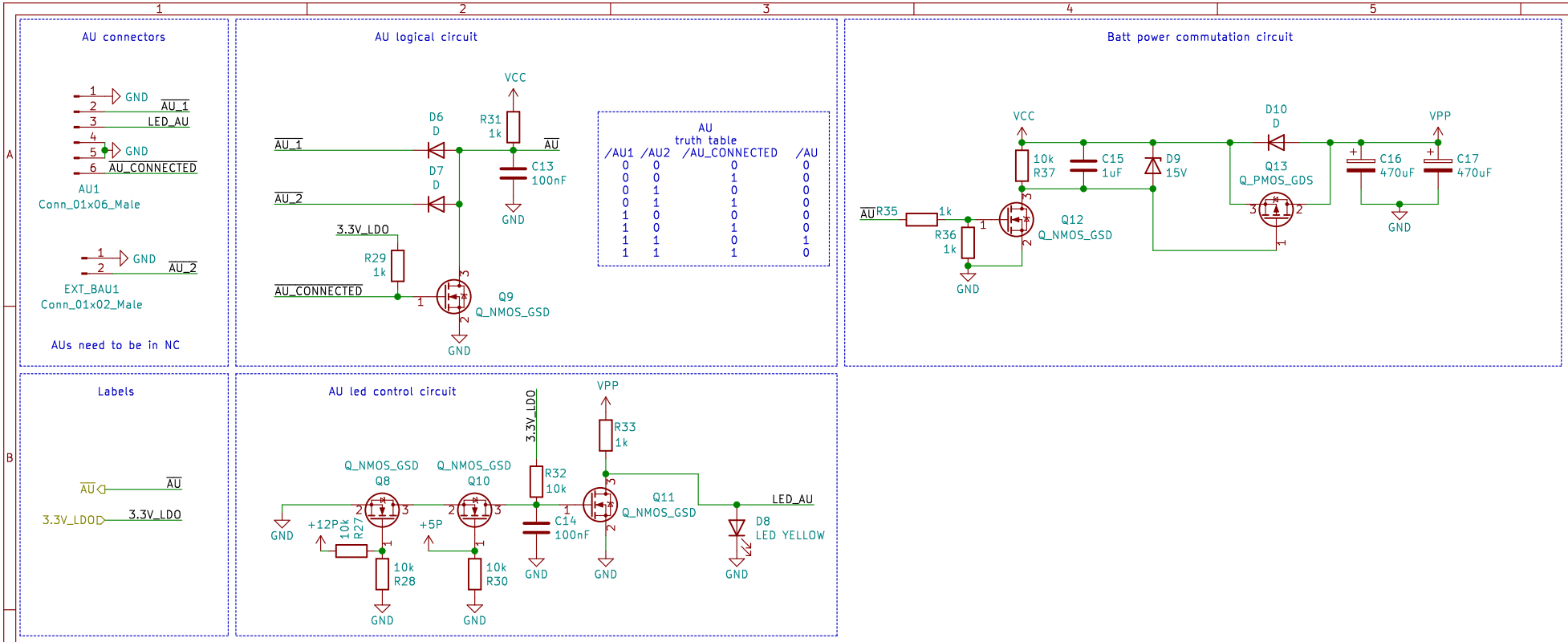

Signals descriptions

- VCC:
Power input 9-36V (batterie or external power source)
- VPP:
Power from VCC for actuators
- AU:
AU signal; when AU is pressed, the signal is put to GND
- AU1:
Signal for robot AU
- AU2:
Signal from extern AU
- LED_AU:
AU led power from VCC
- AU_CONNECTED:
Signal to tell if AU is connected to the board (at GND)
- 3.3V_LDO:
3.3V comming from a LDO used for the control of the board
- 12P:
12V power for actuators
- 5P:
5V power for actuators

Evolutek<< & Coffee Machine

Sheet: /AU/
File: AU.sch

Title: Carte d'alimentation

Size: A4	Date: 2022-03-13	**Rev: V4.1**
KiCad E.D.A. kicad (5.1.10)-1		Id: 3/4

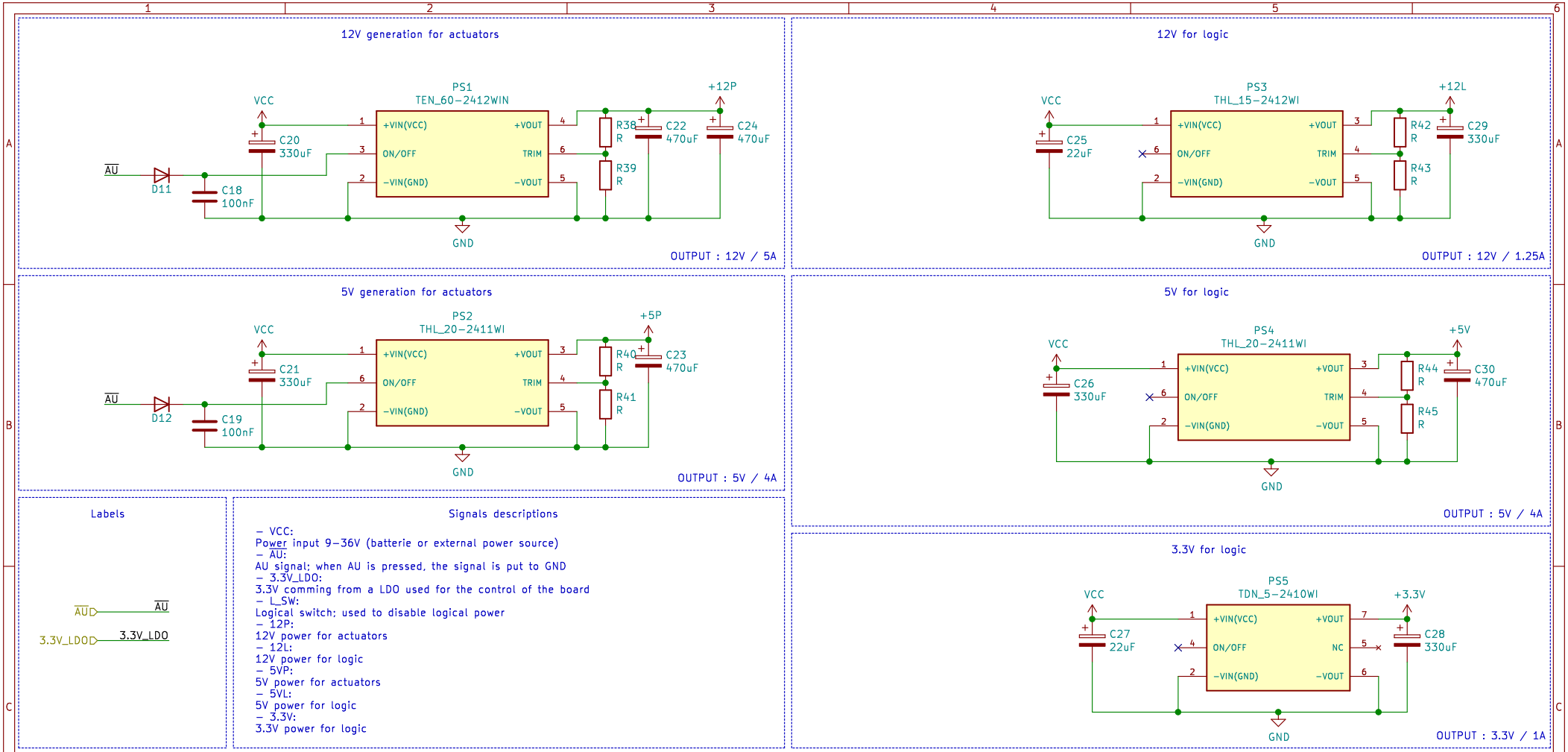

Labels

AU — AU

3.3V_LDO — 3.3V_LDO

Signals descriptions

- VCC:
Power input 9-36V (batterie or external power source)
- AU:
AU signal; when AU is pressed, the signal is put to GND
- 3.3V_LDO:
3.3V comming from a LDO used for the control of the board
- L_SW:
Logical switch; used to disable logical power
- 12P:
12V power for actuators
- 12L:
12V power for logic
- 5VP:
5V power for actuators
- 5VL:
5V power for logic
- 3.3V:
3.3V power for logic

Evolutek<< & Coffee Machine

Sheet: /Converters/
File: Converters.sch

Title: Carte d'alimentation

Size: A4	Date: 2022-03-13	**Rev: V4.1**
KiCad E.D.A. kicad (5.1.10)-1		Id: 4/4