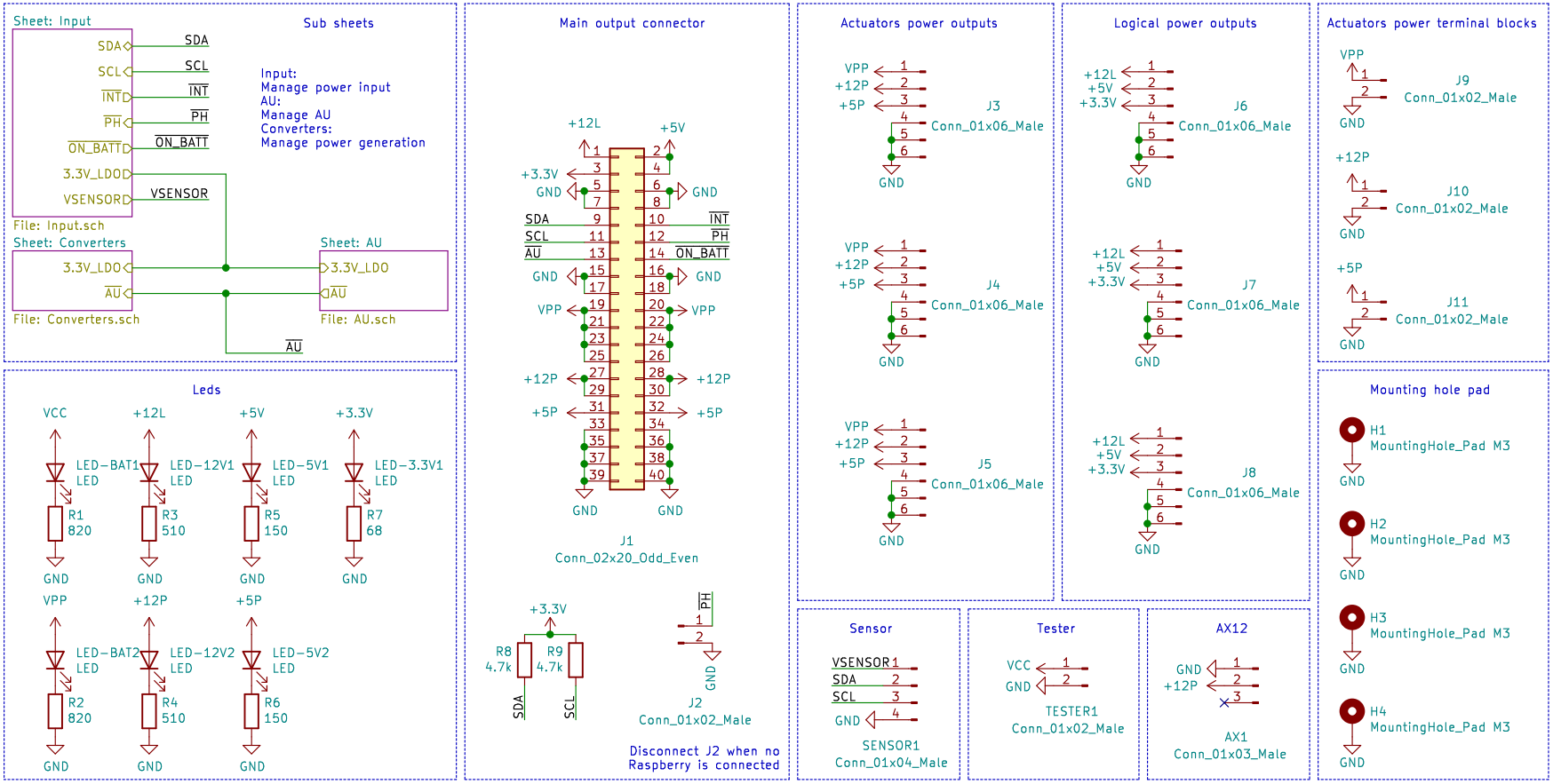

TODO:
Decoupler VCC ?
Plus de décloupage ?
Mettre PH à GND avec L_SW ?
Enlever les jumper dans input
Pullup PH, INT, ON_BAU ?

Evolutek<< & Coffee Machine

Sheet: /
File: Carte Alim.sch

Title: Carte Alim

Size: A4	Date: 2021-08-15	**Rev: V4.1**
KiCad E.D.A. kicad (5.1.8)-1		Id: 1/4

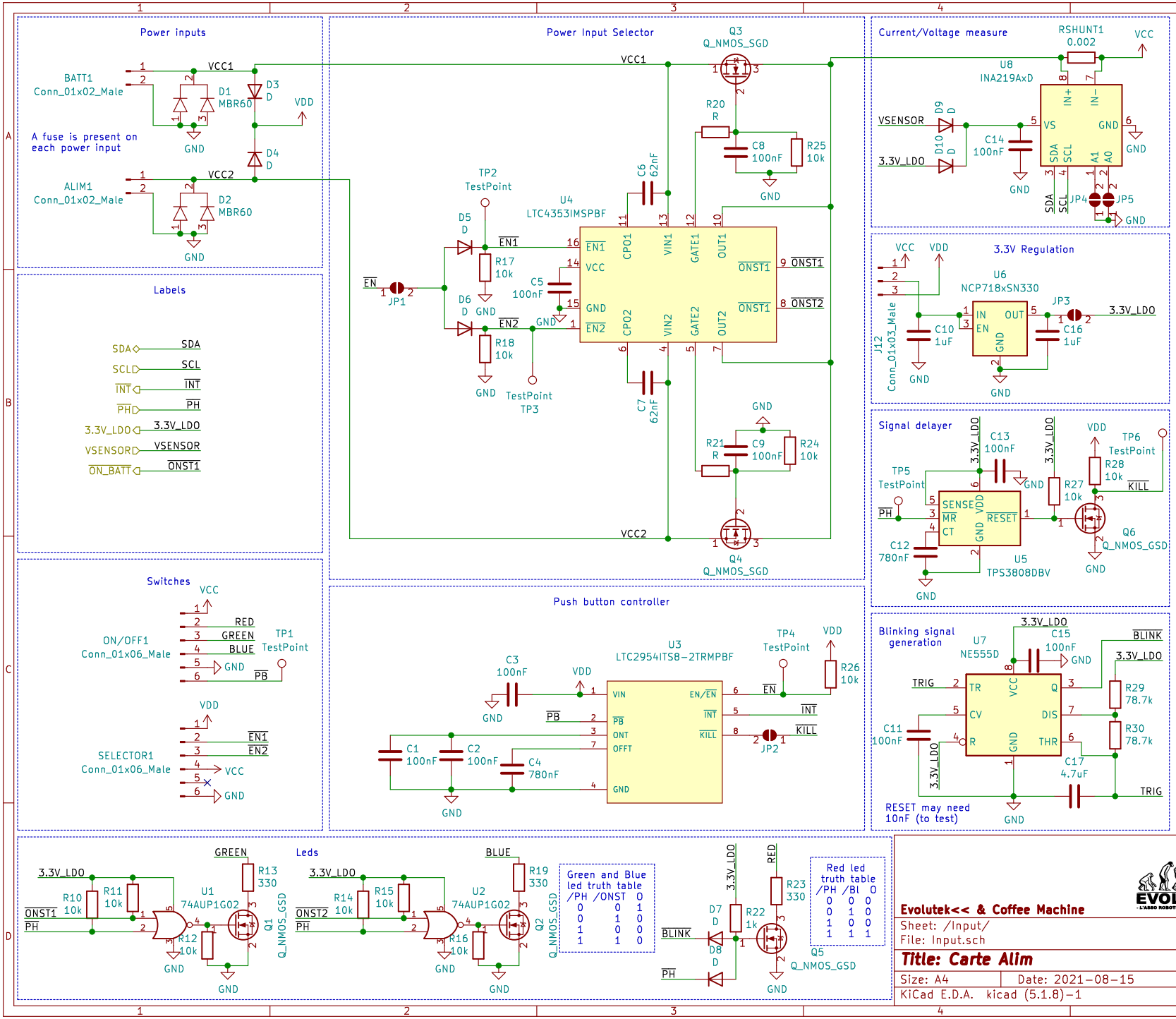

This design is used to:
- Controlling the power input of the robot with a push button.
- Select the power source between a battery or an external alimentation.

The power sources are protected with:
- A fuse (20-30A)
- A diode to prevent polarization inversion.

The power source selection system use a LTC4353.

By default, the LTC4353 is in ideal diode mode, so it will choose automatically the power source by comparing the voltage.

We can override the ideal diode mode using a 3 state switch to select manually the power source.

The push button control system uses a LTC2950.

To turn on the robot, press the push button 2s. If the Raspberry hasn't turned on in 5s, the robot will turn off.

To turn off the robot, there are 2 ways:
- Press the push button less than 5s. The Raspberry Pi will confirm the shutdown and the robot will turn off after 5s.

- Press the push button more than 5s. It will turn off the robot after the 5s.

The selected push button has 3 leds (Red, Green and Blue).
- It will blink red when the system is turning on and off.
- It will be green when the selected power source is the battery.
- It will be blue when the selected power source is the external alimentation.

An INA219 is used to measure the output current/voltage.

List of ICs:
- LTC2950: push button controller.
- LTC4353: power source selector.
- NCP718: 3.3V regulator.
- TSP3808: current supervisor used for delaying shutdown delay.
- NE55: precision timer used for blinking the red led.

Important signals:
- VCC1/VCC2: Input power (14-18V).
- VDD: Logical power (14-18V).
- VCC: Output power (14-18V).
- SDA/SLC: INA219 I2C (3.3V).
- INT: output signal of the LT2950 when the push button was pressed.
- PH: output signal of the Raspberry if we need to hold the power.
- KILL: delayed signal of PH.
- EN: enable sgnal of the system
- Blink: blinking signal for the red led.

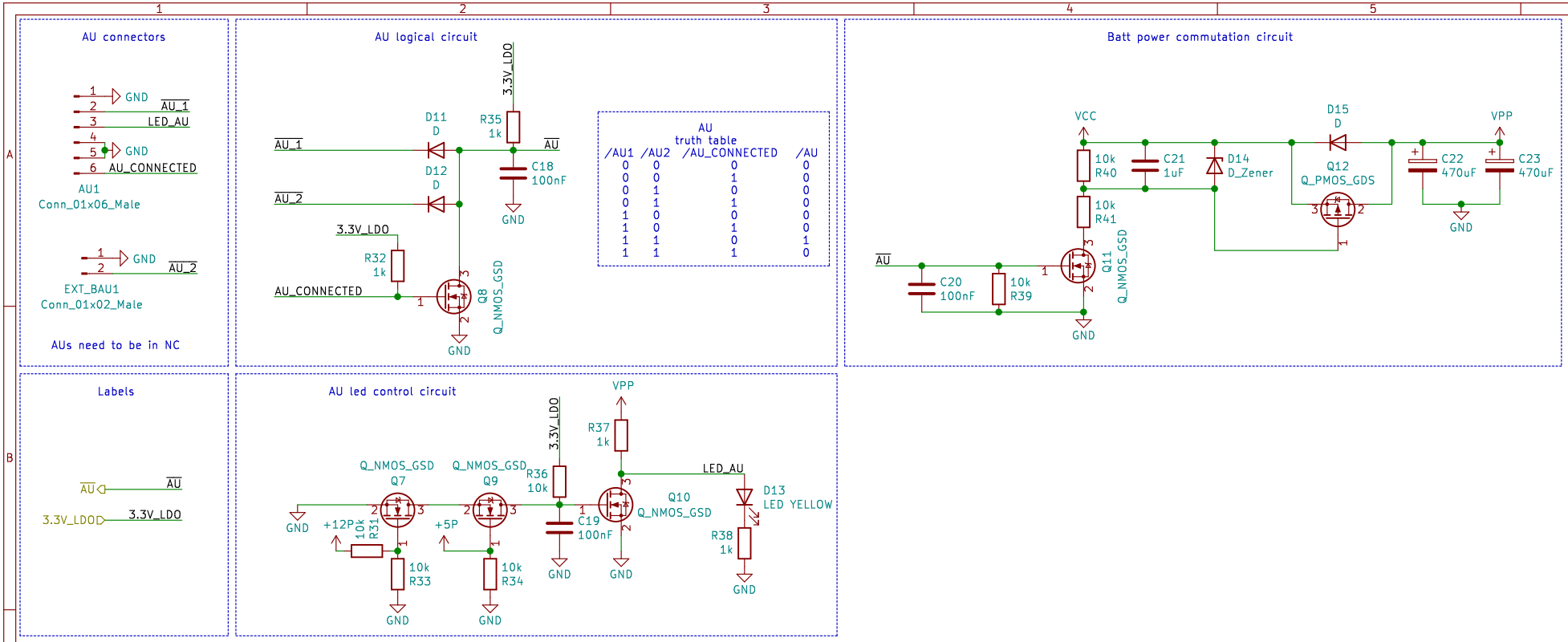

Signals descriptions

- VCC:
Power input 9-36V (batterie or external power source)
- VPP:
Power from VCC for actuators
- $\overline{AU}$:
AU signal; when AU is pressed, the signal is put to GND
- $\overline{AU1}$:
Signal for robot AU
- $\overline{AU2}$:
Signal from extern AU
- LED_AU:
AU led power from VCC
- AU_CONNECTED:
Signal to tell if AU is connected to the board (at GND)
- 3.3V_LDO:
3.3V comming from a LDO used for the control of the board
- 12P:
12V power for actuators
- 5P:
5V power for actuators

Evolutek<< & Coffee Machine

Sheet: /AU/
File: AU.sch

Title: Carte Alim

Size: A4	Date: 2021-08-15	**Rev: V4.1**
KiCad E.D.A. kicad (5.1.8)-1		Id: 3/4

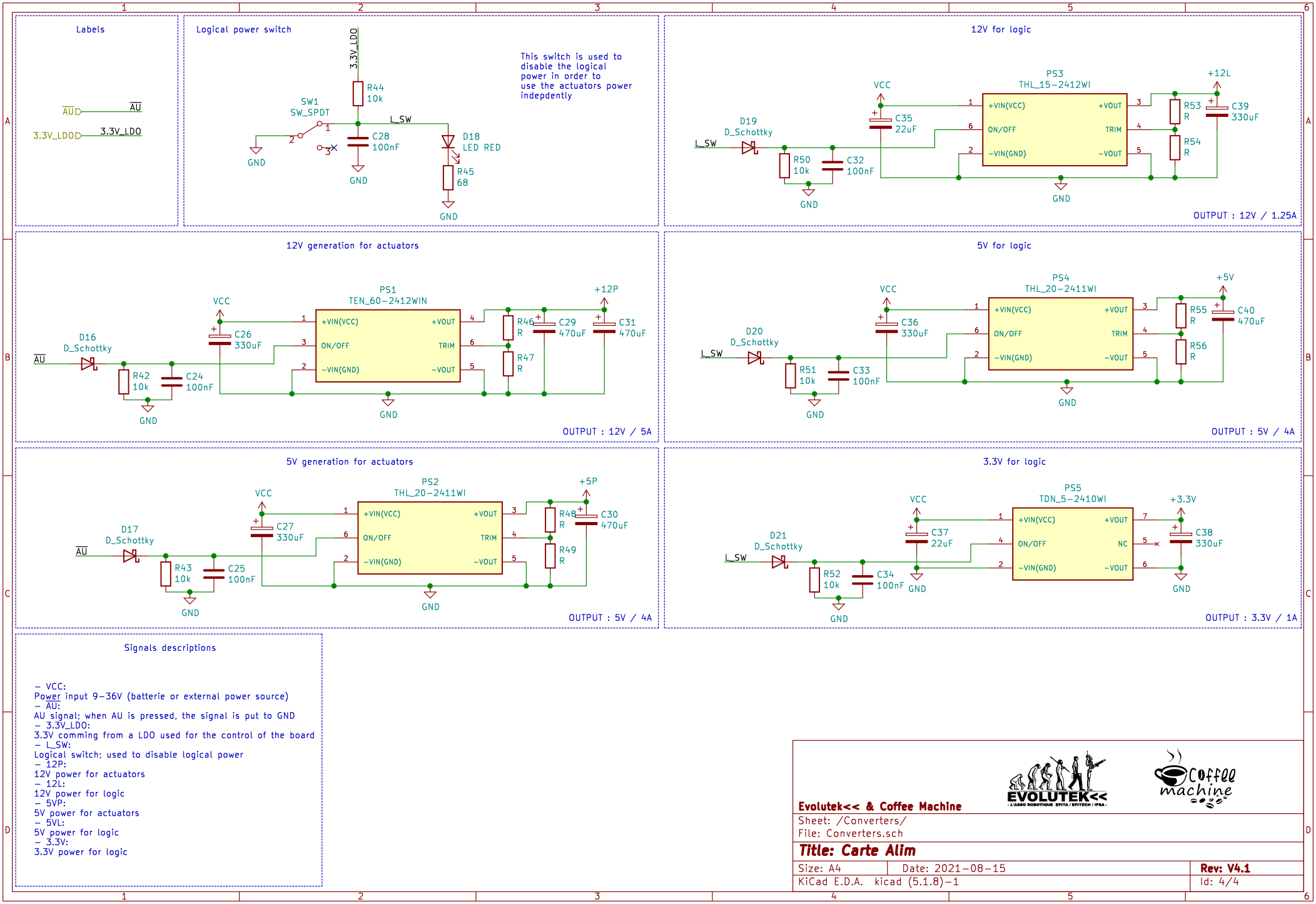
Labels
AU
3.3V_LDO
Logical power switch
3.3V_LDO
R44
10k
SW1
SW_SPDT
L_SW
C28
100nF
D18
LED RED
R45
68
GND
This switch is used to disable the logical power in order to use the actuators power indepdently
12V for logic
PS3
THL_15-2412WI
VCC
+12L
D19
D_Schottky
C35
22uF
R50
10k
C32
100nF
+VIN(VCC)
ON/OFF
-VIN(GND)
+VOUT
TRIM
-VOUT
R53
R
R54
R
C39
330uF
OUTPUT : 12V / 1.25A
12V generation for actuators
PS1
TEN_60-2412WIN
+12P
D16
D_Schottky
R42
10k
C24
100nF
C26
330uF
R46
R
R47
R
C29
470uF
C31
470uF
OUTPUT : 12V / 5A
5V for logic
PS4
THL_20-2411WI
+5V
D20
D_Schottky
R51
10k
C33
100nF
C36
330uF
R55
R
R56
R
C40
470uF
OUTPUT : 5V / 4A
5V generation for actuators
PS2
THL_20-2411WI
+5P
D17
D_Schottky
R43
10k
C25
100nF
C27
330uF
R48
R
R49
R
C30
470uF
OUTPUT : 5V / 4A
3.3V for logic
PS5
TDN_5-2410WI
+3.3V
D21
D_Schottky
R52
10k
C34
100nF
C37
22uF
NC
C38
330uF
OUTPUT : 3.3V / 1A
Signals descriptions
- VCC:
Power input 9-36V (batterie or external power source)
- AU:
AU signal; when AU is pressed, the signal is put to GND
- 3.3V_LDO:
3.3V comming from a LDO used for the control of the board
- L_SW:
Logical switch; used to disable logical power
- 12P:
12V power for actuators
- 12L:
12V power for logic
- 5VP:
5V power for actuators
- 5VL:
5V power for logic
- 3.3V:
3.3V power for logic
Evolutek<< & Coffee Machine
Sheet: /Converters/
File: Converters.sch
Title: Carte Alim
Size: A4
Date: 2021-08-15
Rev: V4.1
KiCad E.D.A. kicad (5.1.8)-1
Id: 4/4