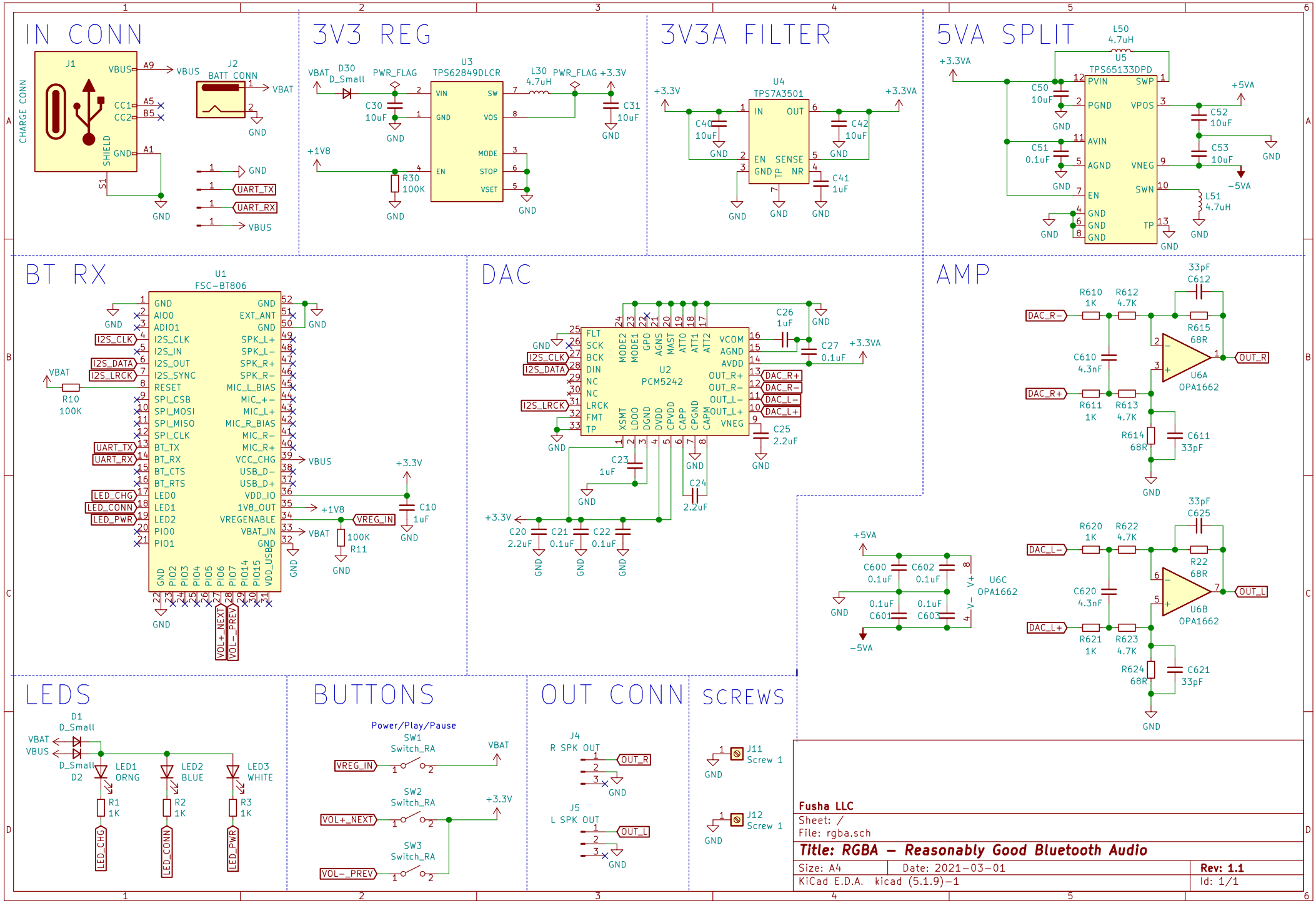
IN CONN
J1
CHARGE CONN
VBUS
CC1
CC2
GND
SHIELD
S1
J2
BATT CONN
VBAT
UART_TX
UART_RX
3V3 REG
U3
TPS62849DLCR
D30
D_Small
PWR_FLAG
L30
4.7uH
+3.3V
+1V8
3V3A FILTER
U4
TPS7A3501
IN
OUT
EN
SENSE
NR
5VA SPLIT
U5
TPS65133DPD
PVIN
SWP
PGND
VPOS
AVIN
AGND
VNEG
SWN
TP
L50
4.7uH
L51
4.7uH
+5VA
-5VA
BT RX
U1
FSC-BT806
I2S_CLK
I2S_DATA
I2S_LRCK
UART_TX
UART_RX
LED_CHG
LED_CONN
LED_PWR
VOL+_NEXT
VOL-_PREV
VREG_IN
DAC
U2
PCM5242
DAC_R+
DAC_R-
DAC_L-
DAC_L+
AMP
U6A
OPA1662
U6B
OPA1662
U6C
OPA1662
OUT_R
OUT_L
LEDS
D1
D2
LED1
ORNG
LED2
BLUE
LED3
WHITE
BUTTONS
Power/Play/Pause
SW1
Switch_RA
SW2
SW3
OUT CONN
J4
R SPK OUT
J5
L SPK OUT
SCREWS
J11
Screw 1
J12
Screw 1
Fusha LLC
Sheet: /
File: rgba.sch
Title: RGBA – Reasonably Good Bluetooth Audio
Size: A4
Date: 2021-03-01
Rev: 1.1
KiCad E.D.A. kicad (5.1.9)-1
Id: 1/1