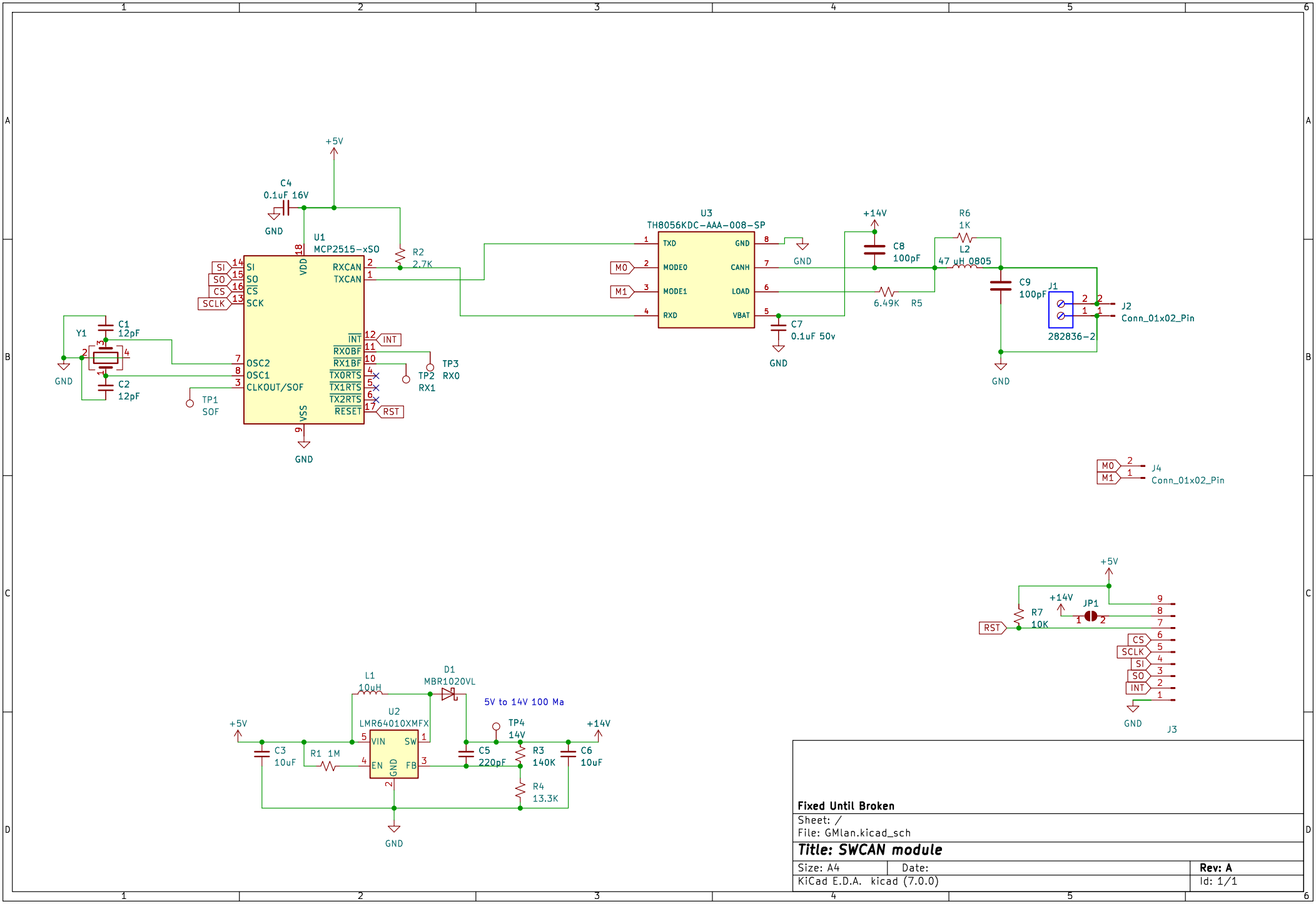

Fixed Until Broken

Sheet: /
File: GMlan.kicad_sch

Title: SWCAN module

Size: A4	Date:	**Rev: A**
KiCad E.D.A. kicad (7.0.0)		Id: 1/1