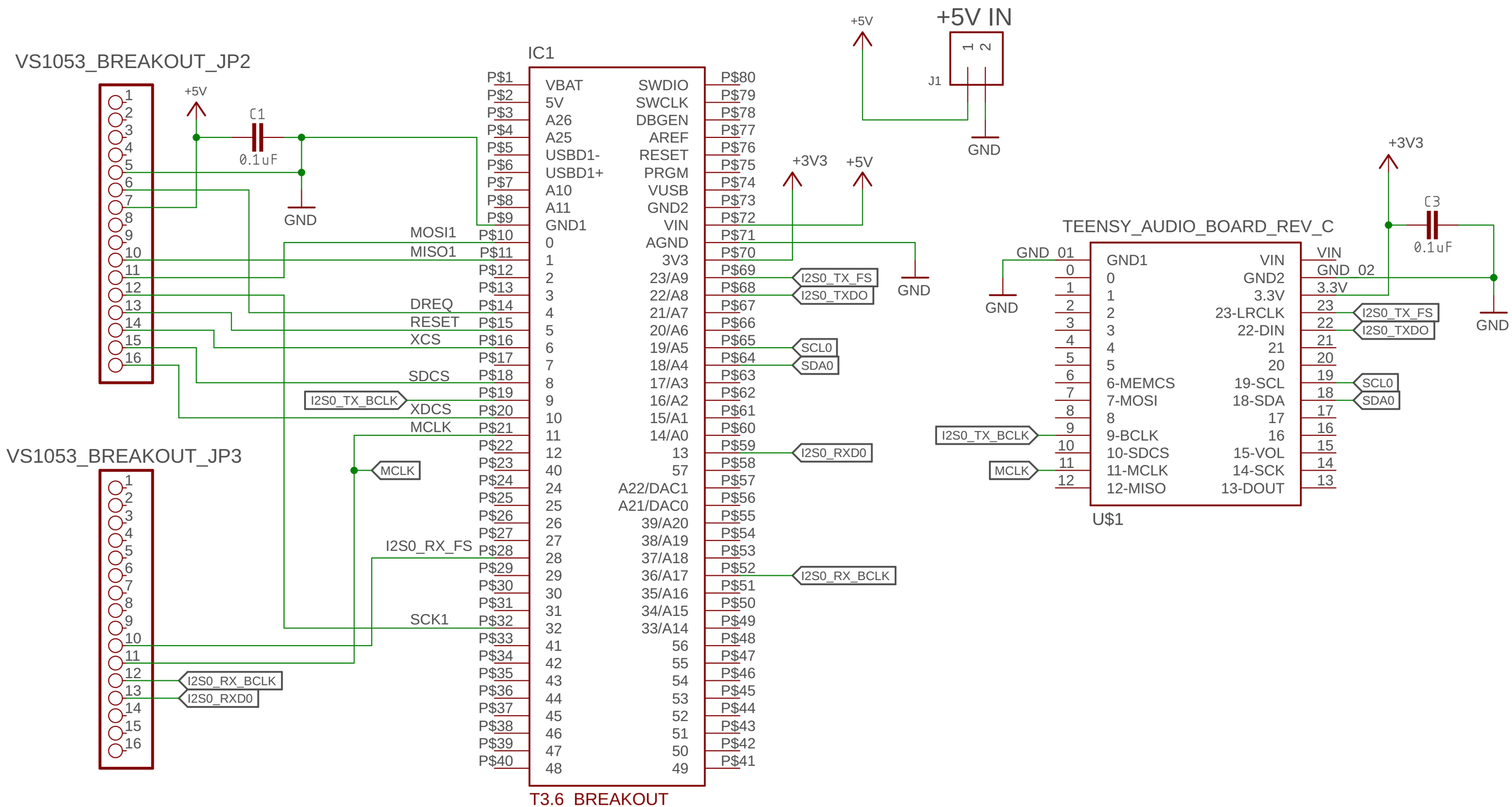
VS1053_BREAKOUT_JP2
VS1053_BREAKOUT_JP3
IC1
T3.6_BREAKOUT
+5V IN
J1
TEENSY_AUDIO_BOARD_REV_C
U$1
C1
0.1uF
C3
0.1uF
+5V
+3V3
GND
MOSI1
MISO1
DREQ
RESET
XCS
SDCS
XDCS
MCLK
I2S0_RX_FS
SCK1
I2S0_TX_BCLK
I2S0_TX_FS
I2S0_TXDO
SCL0
SDA0
I2S0_RXD0
I2S0_RX_BCLK
GND_01
GND_02
GND1
VIN
GND2
3.3V
23-LRCLK
22-DIN
19-SCL
18-SDA
6-MEMCS
7-MOSI
9-BCLK
10-SDCS
11-MCLK
12-MISO
15-VOL
14-SCK
13-DOUT